ESD TDR 64-43
ESTI FILE COPY

ESD-TDR-64-43

ESD RECORD COPY
RETURN TO
SCIENTIFIC & TECHNICAL INFORMATION DIVISION
(ESTI), BUILDING 1211

COPY NR. _____ OF _____ COPIES

ESTI PROCESSED

☐ DDC TAB ☐ PROJ OFFICER
☐ ACCESSION MASTER FILE
☐ _____

DATE _____ AL#-41358
AL#-[redacted]
ESTI CONTROL NR. _____
CY NR. 1 OF 1 CYS

Group Report 1964-16

Cross-Section Measurements of the Echo II Satellite by the Millstone L-Band Radar

R. F. Julian
D. P. Hynek

7 April 1964

Prepared under Electronic Systems Division Contract AF 19(628)-500 by

Lincoln Laboratory
MASSACHUSETTS INSTITUTE OF TECHNOLOGY
Lexington, Massachusetts

AD0602751

The work reported in this document was performed at Lincoln Laboratory, a center for research operated by Massachusetts Institute of Technology, with the support of the U.S. Air Force under Contract AF 19(628)-500.

MASSACHUSETTS INSTITUTE OF TECHNOLOGY

LINCOLN LABORATORY

CROSS-SECTION MEASUREMENTS OF THE ECHO II SATELLITE BY THE MILLSTONE L-BAND RADAR

R. F. JULIAN

D. P. HYNEK

Group 31

GROUP REPORT 1964-16

7 APRIL 1964

LEXINGTON MASSACHUSETTS

CROSS-SECTION MEASUREMENTS OF THE ECHO II SATELLITE
BY THE MILLSTONE L-BAND RADAR

R. F. Julian, D. P. Hynek

ABSTRACT

This report is a summary of the Millstone Radar tracking activities during the early revolutions of Echo II. Eight revolutions were tracked and cross-section measurements taken during the satellite's first four days in orbit followed by four additional tracks during the next three weeks.

All cross-section measurements beginning with Rev. 4, the first observable at Millstone, display a fading pattern indicating that the balloon had not attained full sphericity, or at least contained significant surface irregularities. No essential change in the fading pattern was noted throughout the period that measurements were taken, except for perhaps more frequent fading during the later passes.

Starting with Rev. 5, the first complete horizon-to-horizon measurement made, a periodicity of approximately 104 seconds was observed. This periodicity was also apparent during the later passes.

The estimated average radar cross section during these observations was about one-half the theoretical 1330 square meters.

A pulse-to-pulse cross section vs time record is included for Rev. 5 and Rev. 321, the last covered in this report.

Accepted for the Air Force
Franklin C. Hudson, Deputy Chief
Air Force Lincoln Laboratory Office

INTRODUCTION

This report is a summary of the tracking activities at Millstone during the early revolutions of the Echo II passive communications satellite.

The satellite was launched from the Pacific Missile Range on January 25, 1964, and placed in a near-circular polar orbit at a mean altitude of 635 nautical miles. This 135-foot diameter sphere has a rigidized skin to retain its shape after inflation. Full pressurization of this structure was to take place within two hours after launch.

The earliest passes visible to Millstone were tracked to assist NASA in determining the extent and success of the initial inflation effort. Later passes were tracked to observe possible anomalies in the balloon's structure.

RADAR PARAMETERS

Frequency	1295 Mcs
Antenna	84-foot paraboloid, 46.5 db gain
	12-horn monopulse
Peak transmitted power	400 kw min., 5 Mw max.
Pulse repetition frequency	15 pps
Pulse length	2 millisec.
Transmitted polarization	right circular
Received polarization	left circular
Receiving system noise temperature	$300^{\circ}K$
System losses	1.5 db

DATA RECORDING

During each track radar returns were recorded on magnetic tape and processed in the CG-24 computer to output averaged values of elevation, azimuth, range, and range rate. The raw signal strength data on tape were processed to

produce a plot of the pulse-by-pulse radar cross section as a function of time. In addition, signal strength vs time measurements were taken on a Sanborn pen recorder for real-time observation of events.

A block diagram of the recording system is shown in Fig. 1. Recording noise-bandwidth was 100 kcs. Target Doppler frequencies covered a band of approximately $\pm$ 55 kcs, reaching these maximum values on high elevation passes. Although target Doppler is automatically corrected at the 2-Mcs I.F. level by an appropriate shift in the 28-Mcs L.O. permitting a much narrower receiver bandwidth, the wider bandwidth was used to prevent possible Doppler false alarms from distorting the signal strength measurement.

The transmitter peak power was reduced to 400 kw (from a normal 5 Mw for tracking) during most of these operations to handle the range of signal strength variations from this relatively huge radar target more easily.

The cross-section plots represent a pulse-by-pulse record of the solution to the equation:

$$\sigma = \frac{(4\pi)^3}{\lambda^2} \frac{R^4 S}{G^2} \frac{L}{P}$$

where σ = target cross section in square meters

λ = wavelength in meters

R = target range in meters

S = peak received power in watts

G = antenna gain

L = system losses

P = peak transmission power in watts

RESULTS

The satellite was first detected at Millstone during Rev. 4 and tracked for about 40 seconds before it receded over the horizon. The first complete horizon-to-horizon track was made during Rev. 5.

From the outset, Echo II displayed a very irregular cross-section pattern and maintained this behavior throughout the period covered by this report. No significant change was observed from run to run except for perhaps larger and more frequent fades during the last passes. Fades of the order of 10 db were rather common with fades of the order of 20 db frequently recorded.

During Rev. 5 a slow periodic behavior was observed with an average period of approximately 104 seconds. This period was made evident by deep fades of several seconds' duration and was observed on most of the following passes. More rapid fades of the order of one per second appear throughout the recordings and strongly suggest a correlation with the gore structure of the balloon. This rate is compatible with the period observed and the number of gores (106) comprising the balloon.

Table I is a summary of the revolutions for which cross-section data are available. Listed in the Table are the maximum, minimum and estimated average cross-section values recorded for each run in decibels relative to one square meter.

In Figs. 2 and 3 are given pulse-to-pulse cross section vs time plots for Rev. 5, the first complete track, and Rev. 321, the last covered in this report.

f

TABLE I

Radar Cross Section DB Above/m^2

Rev. No.	Date	Duration Of Data	Max. σ	Min. σ (Est)	Ave.* σ (Est)
04	25 Jan 64	40 sec.	37 db	17 db	28 db
05	25 Jan 64	16m 42s	40 db	9 db	31 db
06	25 Jan 64	15m 45s	45 db	14 db	33 db
11	26 Jan 64	16m 12s	45 db	10 db	31 db
12	26 Jan 64	1m 45s	36 db	15 db	28 db
31	27 Jan 64	15m 10s	37 db	8 db	27 db
44	28 Jan 64	14 min.	34 db	8 db	24 db
136	4 Feb 64	12m 45s	42 db	14 db	29 db
137	4 Feb 64	17 min.	37 db	5 db	25 db
229	11 Feb 64	15 min.	40 db	10 db	28 db
321	18 Feb 64	9m 30s	41 db	10 db	29 db

*The theoretical radar cross section is approximately 31.2 db (1330 sq. meters).

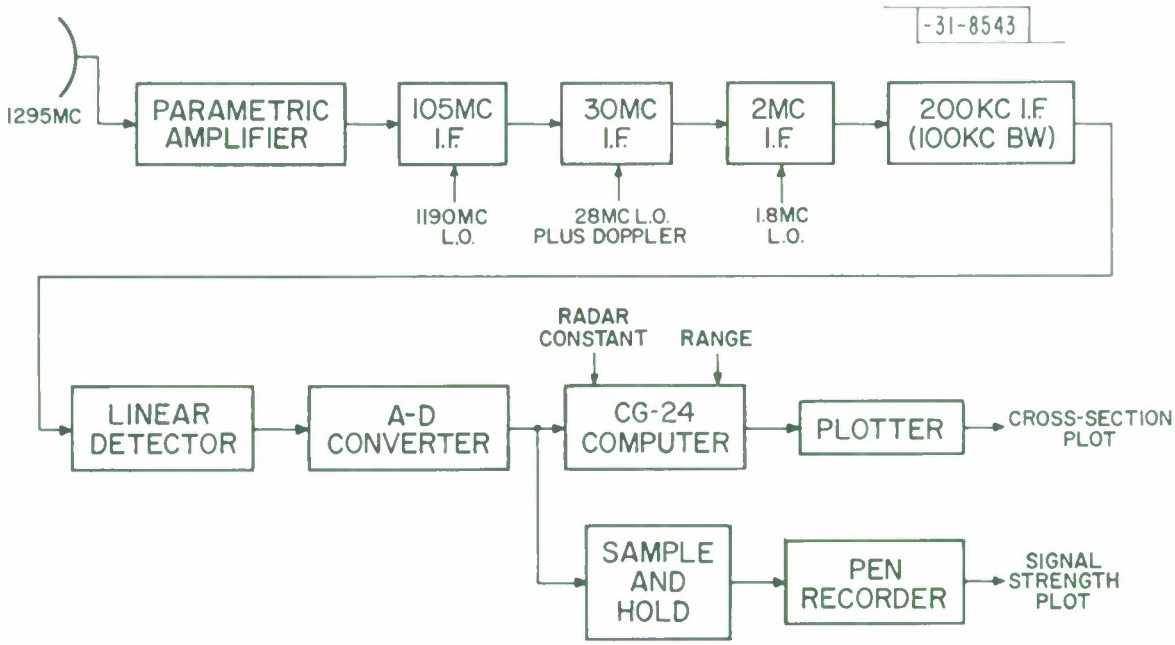

Fig. 1. Signal recording block diagram.

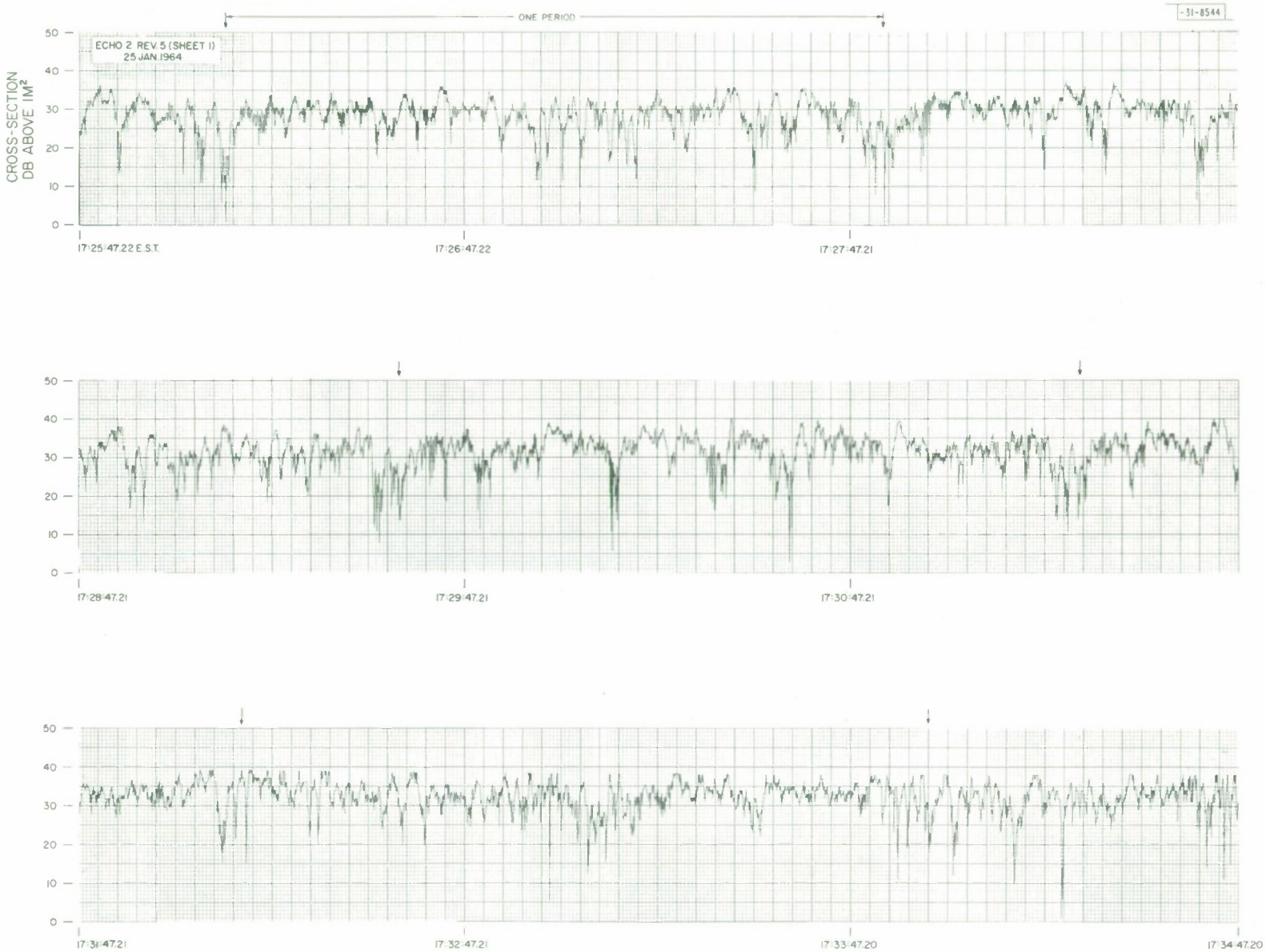

Fig. 2a. Radar cross-section vs. time plot for revolution no. 5.

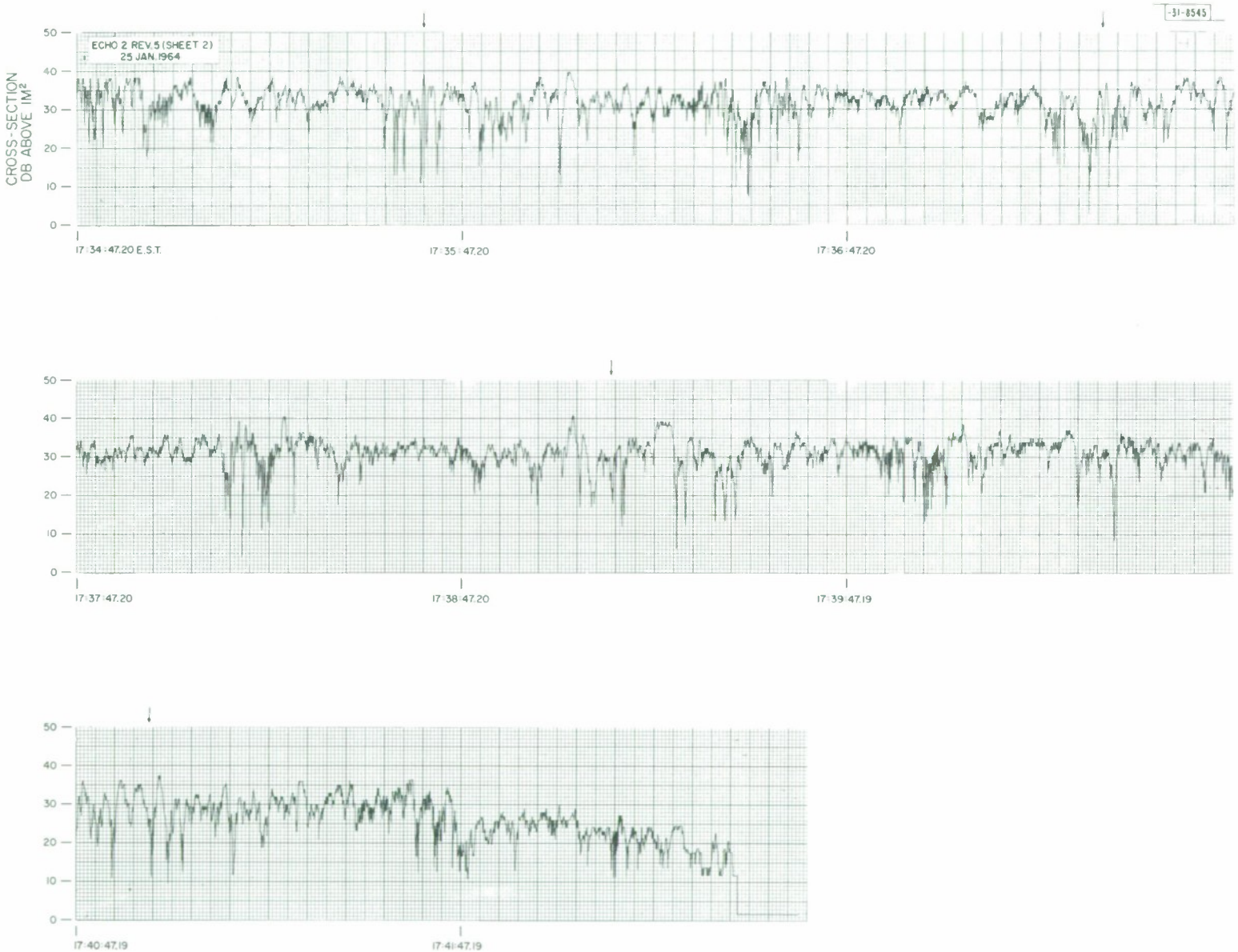

Fig. 2b. Radar cross-section vs. time plot for revolution no. 5.

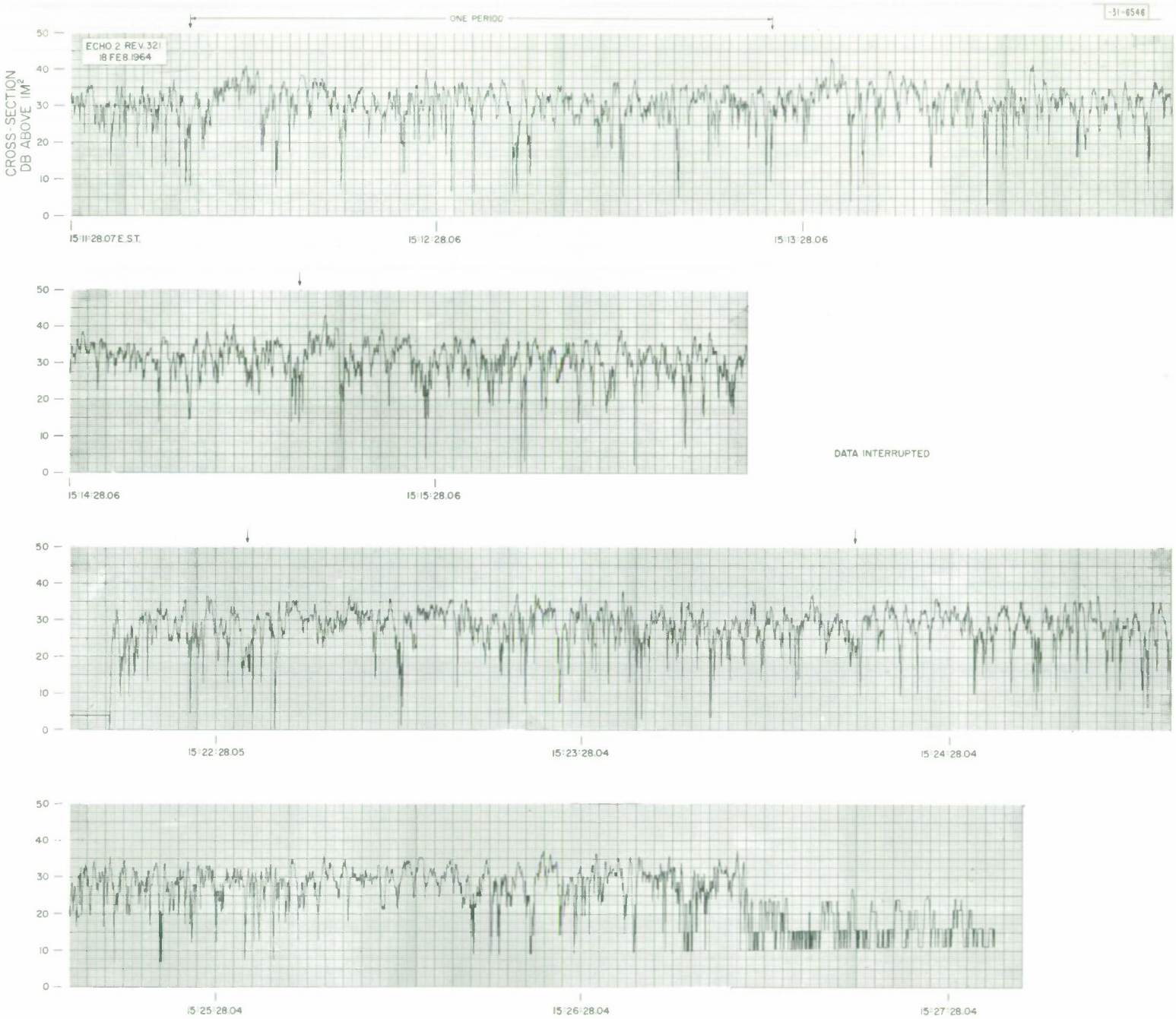

Fig. 3. Radar cross-section vs. time plot for revolution no.321.

DISTRIBUTION

Mr. J. M. Miller
Conductron Corporation
Operations Research Department
343 South Main Street
Ann Arbor, Michigan

Mr. Robert Kovac
Conductron Corporation
(address above)

Mr. John Thurber, Code 625
NASA
Goddard Space Flight Center
Greenbelt, Maryland

Mr. A. Kampinsky
NASA
(address above)

Mr. T. E. Ryan
NASA
(address above)

Group 31

J. S. Arthur
R. A. Brockelman
C. A. Clark
J. V. Evans
C. T. Frerichs
E. Gehrels
T. Hagfors
J. C. Henry
G. M. Hyde
D. P. Hynek
R. F. Julian
L. G. Kraft, Jr.
M. L. Meeks
V. C. Pineo
W. A. Reid
P. B. Sebring
R. R. Silva
W. W. Smith
M. L. Stone
S. Weinreb
File (10)

LINCOLN LABORATORY:

Director's Office

W. H. Radford
W. B. Davenport, Jr.
C. R. Wieser
D. E. Dustin

Division 3

J. W. Meyer
M. A. Herlin

Group 33

J. H. Chisholm
L. J. Sullivan

emf