602678

2 of 3

WL TDR-64-25

WL
TDR
64-25

MILITARY NUCLEAR POWER PLANTS

by

JOHN D. BELSON
1Lt USAF

247 p
hc ~6.00
mf ~1.25

June 1964

TECHNICAL DOCUMENTARY REPORT NO. WL TDR-64-25

Research and Technology Division
AIR FORCE WEAPONS LABORATORY
Air Force Systems Command
Kirtland Air Force Base
New Mexico

DDC
RECEIVED
JUL 24 1964
DDC-IRA A

Project No. 2800

BLANK PAGES
IN THIS
DOCUMENT
WERE NOT
FILMED

Research and Technology Division
Air Force Systems Command
AIR FORCE WEAPONS LABORATORY
Kirtland Air Force Base
New Mexico

When Government drawings, specifications, or other data are used for any purpose other than in connection with a definitely related Government procurement operation, the United States Government thereby incurs no responsibility nor any obligation whatsoever; and the fact that the Government may have formulated, furnished, or in any way supplied the said drawings, specifications, or other data, is not to be regarded by implication or otherwise as in any manner licensing the holder or any other person or corporation, or conveying any rights or permission to manufacture, use, or sell any patented invention that may in any way be related thereto.

This report is made available for study upon the understanding that the Government's proprietary interests in and relating thereto shall not be impaired. In case of apparent conflict between the Government's proprietary interests and those of others, notify the Staff Judge Advocate, Air Force Systems Command, Andrews AF Base, Washington 25, DC.

This report is published for the exchange and stimulation of ideas; it does not necessarily express the intent or policy of any higher headquarters.

Qualified requesters may obtain copies of this report from DDC. Orders will be expedited if placed through the librarian or other staff member designated to request and receive documents from DDC.

FOREWORD

The purpose of this report is to describe the Air Force nuclear power program with its objectives and to inform potential users of the compatibility of nuclear power with existing and foreseeable Air Force operational concepts.

ABSTRACT

This report was designed primarily to assist both Air Force planning groups and civil engineering functions in the proper adaptation of nuclear power to satisfy their requirements.

Air Force, Army, and AEC interrelationships within the nuclear power program are discussed along with development and procurement procedures. Selection standards and training requirements for nuclear power plant operators and officers-in-charge are presented. Cost curves have been included to aid in estimating the capital and operating costs of nuclear and conventional power plants and the breakeven fuel-oil prices for nuclear versus fossil-fuel plants. The capabilities of nuclear power within existing technology are evaluated and possible areas of application discussed.

PUBLICATION REVIEW

This report has been reviewed and is approved.

JOHN D. BELSON
1Lt USAF
Project Officer

JOHN W. TALLEY
Lt Colonel USAF
Chief, Nuclear Power Branch

RICHARD A. HOUSE
Colonel USAF
Chief, Development Division

CONTENTS

	Page
Introduction	1
Personnel Requirements and Training	9
Nuclear Power Plant Cost Data	13
Plant and Personnel Nuclear Safety Systems	25
Disadvantages	34
Advantages	37
Conclusions	38
Appendix	
PM-1 Nuclear Power Plant	41
PM-2A Nuclear Power Plant	71
PM-3A Nuclear Power Plant	89
SM-1 Nuclear Power Plant	119
SM-1A Nuclear Power Plant	151
ML-1 Nuclear Power Plant	161
MH-1A Nuclear Power Plant	185
References	204
Distribution	205

LIST OF FIGURES

Figure		Page
1	US Army Engineering Reactor Group/ANPP	2
2	AFWL/WLDN command and liaison channels	4
3	Nuclear power reactor diagrams	7
4	Selection, training, and qualification of operators and supervisors	11
5	Selection criteria for NPPOC	12
6	PM-1 crew organization	14
7	Nuclear commercial power plant capital cost	15
8	Nuclear military power plant capital cost	16
9	Nuclear commercial power plant operating and maintenance cost	17
10	Nuclear military power plant operating and maintenance cost	18
11	Nuclear commercial power plant fuel cycle cost	19
12	Nuclear military power plant fuel cycle cost	20
13	Nuclear commercial power plant total cost	21
14	Nuclear military power plant total cost	22
15	Nuclear versus conventional oil-fired power plants break-even price of fuel oil	23
16	Nuclear versus diesel power plants break-even price of diesel oil	24
17	PM-1 primary system flow diagram	46
18	PM-1 secondary system flow diagram	51
19	PM-2A flow diagram	74
20	PM-2A nuclear power plant	75
21	PM-3A flow diagram	92
22	SM-1 flow diagram	122
23	SM-1 nuclear power plant	123
24	SM-1A flow diagram	154
25	ML-1 flow diagram	164
26	ML-1 nuclear power plant	165
27	MH-1A flow diagram	189

LIST OF TABLES

	Page
PM-1 data sheet	43
PM-2A data sheet	72
PM-3A data sheet	90
SM-1 data sheet	120
SM-1A data sheet	152
ML-1 data sheet	163
MH-1A data sheet	187

1. INTRODUCTION

a. Military nuclear power organization

Present Department of Defense (DOD) policy regarding surface nuclear power plants designates the Army Corps of Engineers as the design and construction agency for the Army, Air Force, and Navy. This responsibility excludes the development of nuclear power systems for naval vessel propulsion or for air and space vehicle applications. In addition to design and construction, the Department of Army has been designated as the DOD executive agency for the development of nuclear power plants for military applications in conjunction with the Atomic Energy Commission (AEC). The Army Nuclear Power Program (ANPP) was initiated to meet the above requirement by combining groups within the Army Corps of Engineers and the AEC Division of Reactor Development.

During 1958, the Chief of Engineers established the US Army Engineer Reactors Group (USAERG) to be the basic organizational framework of the ANPP. The functional organization of the Engineer Reactors Group is shown in figure 1. The nerve center of the program and the command of the group are centered in the Director, ANPP, who also functions as the Director, USAERG; Special Assistant for Nuclear Power, Directorate of Military Construction, Office, Chief of Engineers; and Assistant Director (Army Reactors), Division of Reactor Development, Atomic Energy Commission.

The Nuclear Power Division, located in the Office of the Chief of Engineers, provides staff support to the Director, ANPP, in the management and surveillance of the overall program. Army Reactors, a directorate within the Division of Reactor Development of the AEC, located at AEC Headquarters, Germantown, Maryland, provides technical and administrative staff support to the Chief, ANPP, in the management of research and development aspects of the program. The Nuclear Power Field Office, through its elements located at Fort Belvoir, Virginia, plans and directs engineering and administrative support of Army Field Plants, trains and assigns power plant personnel, operates the SM-1 Nuclear Power Plant, and provides administrative support for the entire USAERG.

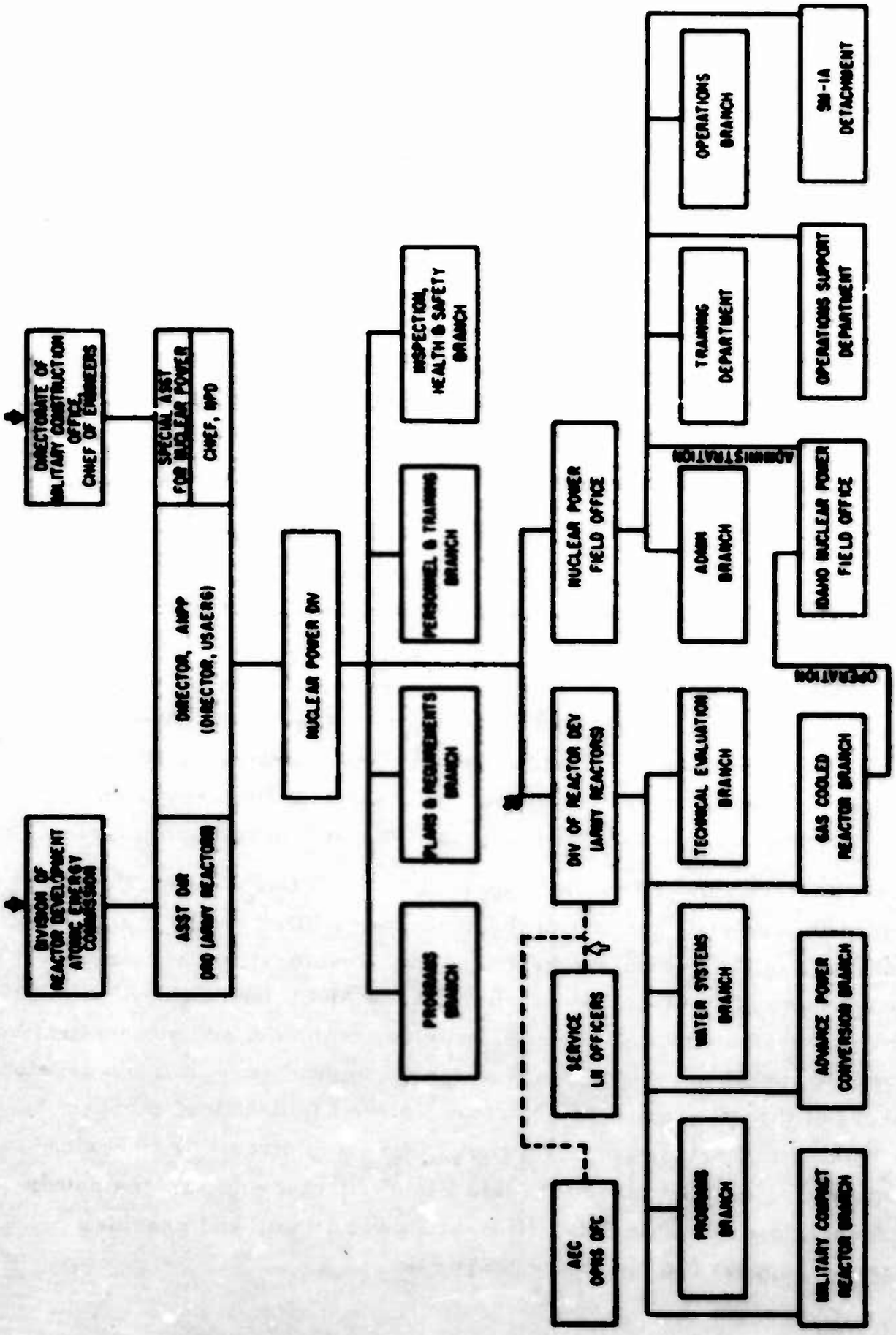

Figure 1. US Army Engineering Reactor Group/ANPP

Liason between the ANPP and the Navy is effected by direct contact between the Nuclear Power Division, Bureau of Yards and Docks, and the major elements of the ANPP. Direct participation of Navy personnel is accomplished through the Military Liaison Committee and by assignment of personnel to Army Reactors, DRD.

In the past, Air Force liaison with the ANPP had been through Detachment 6, Electronic Systems Division, Air Force Systems Command, which had a duty station at Army Reactors, DRD, Germantown, Maryland. However, Detachment 6 was disbanded during 1963 and its liaison responsibilities were assumed by the Nuclear Power Branch (WLDN), Air Force Weapons Laboratory (AFWL), Air Force Systems Command (AFSC), located at Kirtland AFB, New Mexico. The Air Force also participates in the ANPP through the Military Liaison Committee and by the assignment of a PM-1 Project Manager located at NPFO, Fort Belvoir, Virginia. Army, Navy, Air Force, and AEC relationships in the ANPP are shown in figure 2.

The nuclear power program of the Air Force Weapons Laboratory is designed to provide Air Force Systems Command with the capability to deal in an informed and intelligent manner with AEC/DOD agencies in the development and procurement of surface nuclear power plants for Air Force use. This program has the following specific objectives:

(1) To collect and evaluate Air Force requirements for surface nuclear power systems.

(2) To provide informed technical data to Air Force using commands on the potential usage of nuclear power reactors.

(3) To perform operational and technical evaluations on Air Force surface nuclear power systems.

(4) To conduct exploratory development programs on potential applications and unique criteria associated with Air Force usage of nuclear reactors.

(5) To conduct exploratory development programs for assuring the safety and improving the reliability of military nuclear reactors.

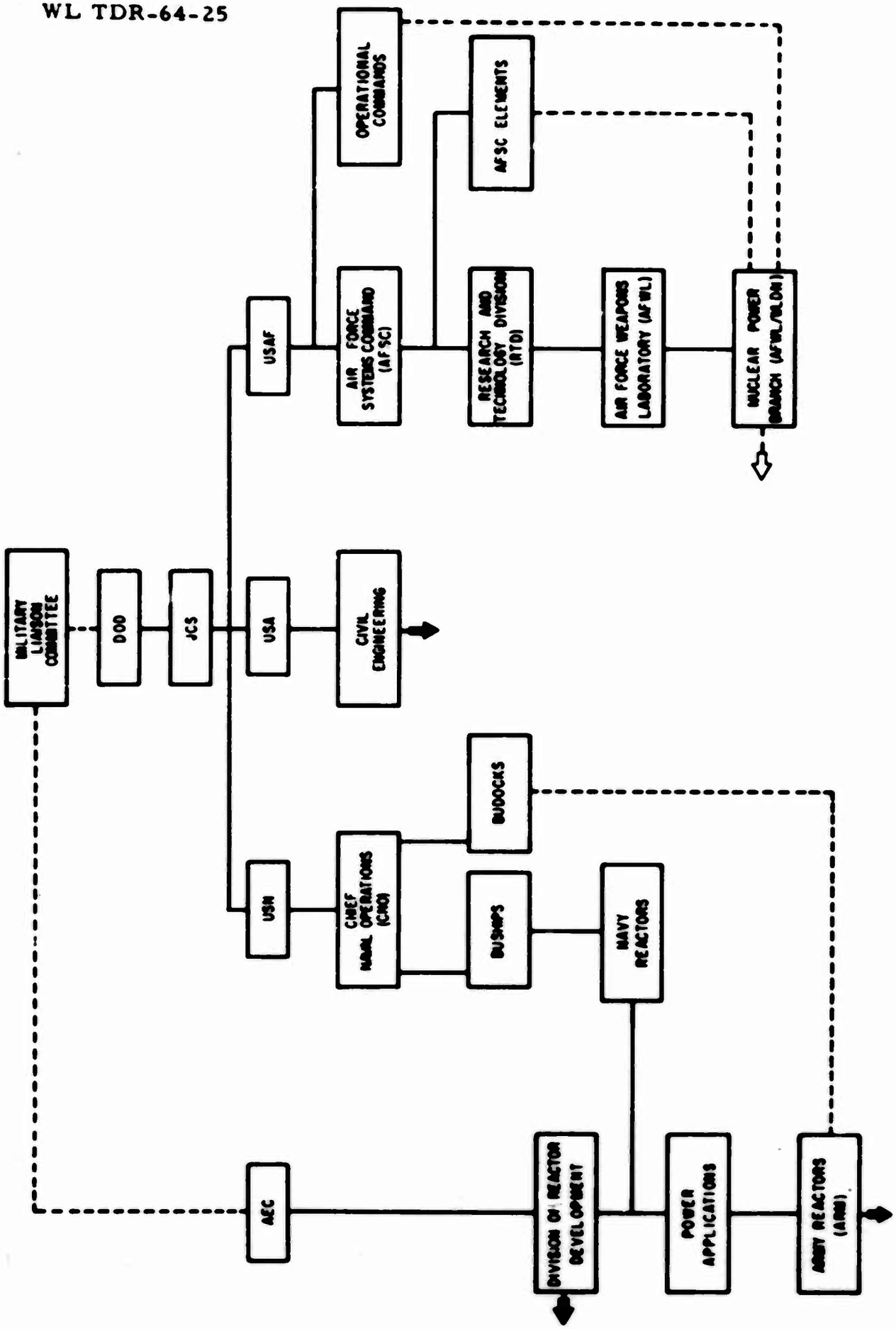

Figure 2. AFWL/WLDN command and liaison channels

From figure 2, it can be seen that power requirements are obtained from the operational commands through direct, but informal, liaison channels. The technical data on the potential usage of nuclear power reactors are disseminated to these commands in a similar manner. If preliminary evaluation by AFWL establishes a potential application of nuclear power, further studies are initiated to determine its feasibility. When and if the requirement is firmly established, it is then submitted by the using command through the usual Air Force channels. Also, the AEC and the ANPP are informed of the requirement for additional evaluation and possible development action on their part.

Procurement of a nuclear power plant for the Air Force can be accomplished in a number of ways, depending upon the type of plant (prototype or "off-the-shelf") and the funding agency. If the plant to be purchased is a prototype, it would be procured by AEC Operations Office regardless of the funding, and the construction agency would be the Army Corps of Engineers. However, if the plant is an "off-the-shelf" item and funded solely by the Air Force, it could be procured by the Air Force with the Army Corps of Engineers acting as the construction agency. No precedent has been set in this type of procurement; the final arrangements would have to be made by the agencies involved, i.e., AEC, Air Force, and the appropriate construction agency.

b. Military nuclear power plant designation

The nuclear power plants developed by the ANPP are classified by mobility and power level. The designation consists of two letters, an arabic number and a possible capital letter following the number.

(1) First letter--degree of mobility:

S - Stationary--permanent construction.

P - Portable--prepackaged at the factory for transportability and rapid assembly at site.

M - Mobile--can be moved intact, or virtually intact; may or may not operate in transit.

(2) Second letter--power range:

L - Low--1000 kw(e) or lower.

M - Medium--1000 to 10,000 kw(e).

H - High--10,000 kw(e) or higher.

(3) Arabic numeral - order of initiation of projects with the same two letter designations.

(4) Capital letter following arabic numeral - order of initiation of field plants of a specific type. Absence of final letter indicates prototype or pilot model.

c. Nuclear power reactors

It is advisable at this point to discuss several reactor concepts and their operation. The discussion will be very general in nature and limited to main components and primary systems. Additional technical data on ANPP-developed plants may be found in the appendix.

(1) Pressurized Water Reactor plant

A Pressurized Water Reactor (PWR) can be defined as a heterogeneous reactor which is both cooled and moderated by water in which there is no net generation of steam. The primary system of a PWR plant consists of the reactor, pressurizer, coolant pump, and the tube side of the steam generator. Depending upon the reactor operating temperatures, the water in the primary system is generally pressurized to pressures in the range of 1000 to 2000 psia to prevent boiling within the reactor proper. Heat is transferred to the secondary system through the steam generator with dry, saturated steam produced on the shell side. The PWR plant's secondary system is the same as that in most conventional plants except that the turbine is designed for operation on dry, saturated steam. Superheated steam can be supplied, but a fossil-fueled superheater would have to be added to the secondary. A typical PWR flow diagram is shown in figure 3a.

(2) Boiling Water Reactor plant

The Boiling Water Reactor (BWR) is a heterogeneous reactor which is both cooled and moderated by water. In the BWR, steam is generated in the reactor proper and fed directly to the turbine. Therefore, the pressure

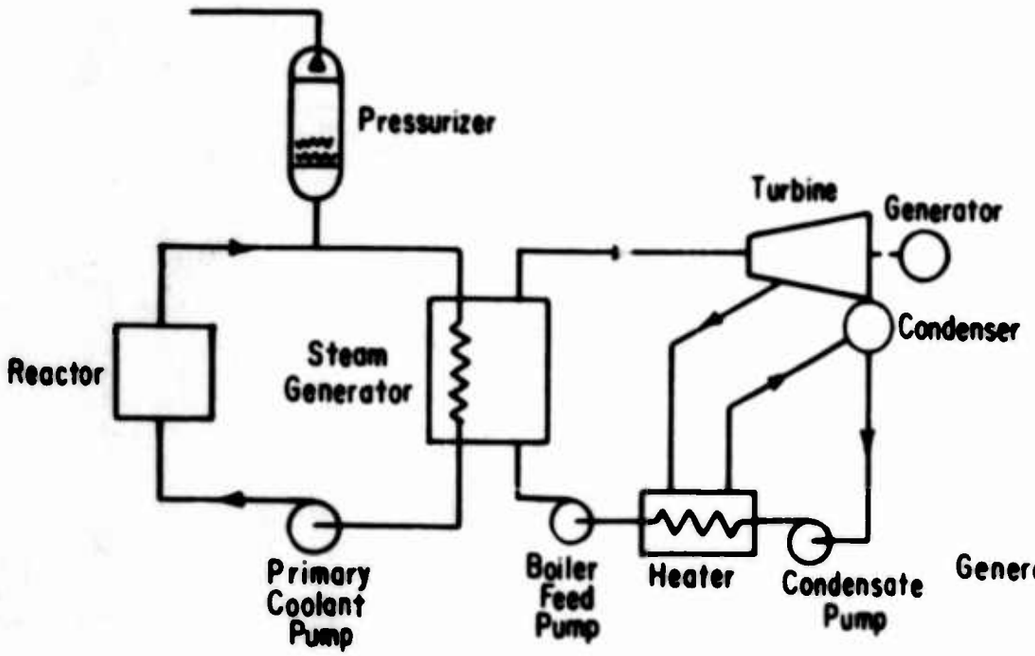

A. Pressurized water reactor plant

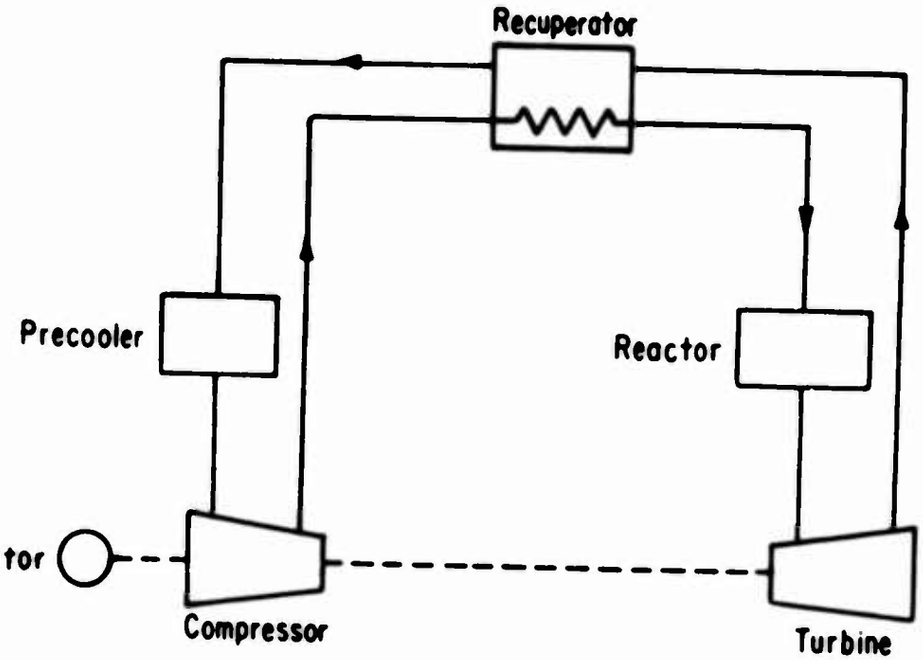

C. Gas cooled reactor plant

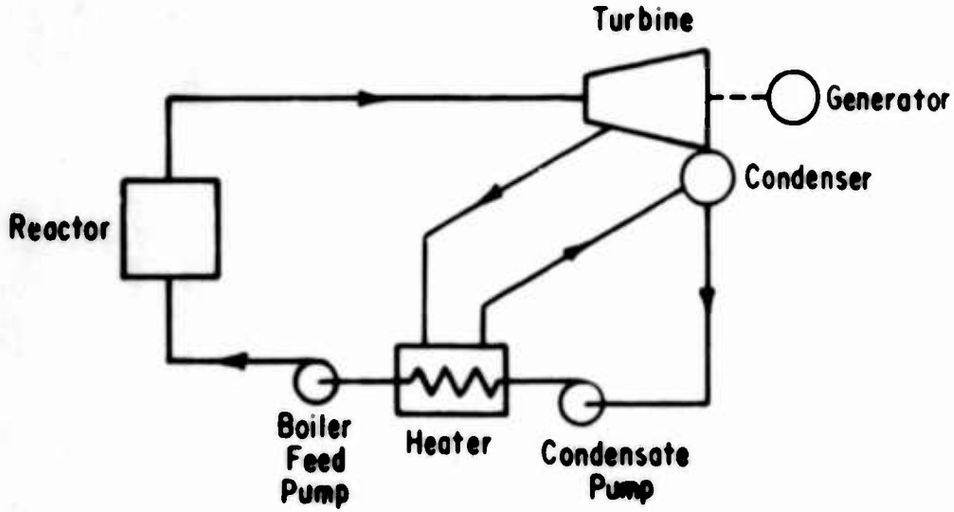

B. Boiling water reactor plant

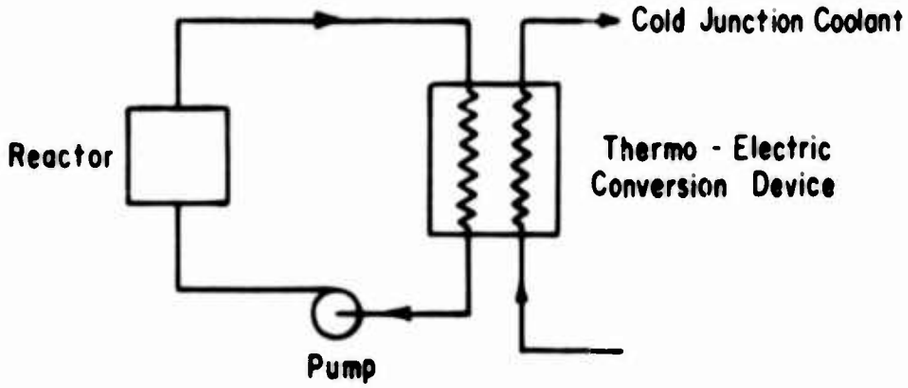

D. Direct conversion reactor plant

Figure 3. Nuclear power reactor diagrams

in the reactor vessel is equal to the saturation pressure of the steam being generated and will generally be in the range of 300 to 1000 psia with corresponding steam temperatures. The lower operating pressures and elimination of the steam generator loop make the BWR less complex than the PWR. However, comparative disadvantages of the BWR result from the control problems involved with steam voids in the core and from the fact that radioactive contamination is circulated through the power generating systems. Superheated steam can be made available with the addition of a fossil-fueled superheater. Existing military or commercial plants do not have integral reactor superheaters. A typical BWR flow diagram is shown in figure 3b.

(3) Gas-cooled reactor plants

During the past few years, several gas-cooled plants have been constructed in Europe. These plants are very similar to the PWR with the exception that a gas, usually carbon dioxide, is used as the coolant in the primary system. However, for the purpose of this discussion, the ML-1 gas-cooled reactor system will be used. The ML-1 operates as a conventional, Brayton, closed-cycle gas turbine plant; the nuclear reactor is the heat source and nitrogen is the plant working fluid. Water is used as the reactor moderator. The ML-1 plant diagram is shown in figure 3c.

(4) Direct conversion reactor plant

Shown in figure 3d is a simple flow diagram of a direct-conversion reactor plant. The nuclear reactor acts as the heat source for the hot junction of the thermocouple while a second fluid (air or water) is used to cool the cold junction. Several direct-conversion reactor power plants have been built for space applications, but they are still in the development stage for surface applications. There are numerous combinations of working fluids and "hot" loop designs; feasibility studies are presently being conducted to establish an optimum design.

This brief discussion on USAF, AEC, and USA/ANPP interrelationships in the field of nuclear power has by no means completely covered this complex area; however, it is hoped that the reader was given a brief insight as to its workings. Following sections will provide information on cost, personnel training, and safety. Both the advantages and disadvantages of

nuclear power are given to aid in defining those areas in which nuclear power can satisfy present and future Air Force electric power and space heat requirements.

2. PERSONNEL REQUIREMENTS AND TRAINING

a. Operators

First in any consideration of a plant crew is the requirement that it be a team composed of highly trained and qualified individuals, each competent in his own duties and each trained in and daily aware of the duties of his associates. Each operator is a specialist in two areas: first, operation of the nuclear power plant; and second, maintenance in one of the four specialty areas: mechanical, electrical, instrumentation, and process control. This cross-training and comparable cross-utilization, which is begun with the crew member's first training course, is continued throughout his experience, providing an understanding of the requirement of teamwork and allowing flexibility of assignment and utilization of personnel.

After mastering the details of plant operation and becoming familiar with the three maintenance specialties other than his own, an operator can become a shift supervisor and thus be responsible for the entire plant when his shift is on duty. The best eventually become plant supervisors and are thus responsible for the operation of all four shifts in addition to certain elements of plant administration and maintenance. After further training and plant operating experience, a few of the exceedingly competent plant supervisors become qualified as plant superintendents to serve as second in charge of a plant and assist the Officer-in-Charge in day-to-day plant operations. Also, he has regular responsibilities as a maintenance and supply specialist.

The training of operators begins with the Nuclear Power Plant Operators Course (NPPOC) which is conducted by the Army Nuclear Power Program (ANPP) at Fort Belvoir, Virginia. It is a comprehensive 1-year program which teaches the general principles of plant operation and maintenance. The course is conducted in three phases which successively cover the theory of nuclear power plants, allow practice operation on both the SM-1 plant simulator and the SM-1 itself, and teach each man the details of one of the four basic maintenance specialties.

The NPPOC is extensive and demanding, beginning with 16 weeks of algebra, trigonometry, modern physics, health physics, and electrical, mechanical, and nuclear engineering presented in the academic phase of training. In the operations phase, the student is trained for 19 weeks, first on the SM-1 nuclear power plant simulator, and then on the plant itself. During this period, the student receives actual experience in operating the plant's reactor and power generation equipment. Finally, in the specialty phase of training which lasts for 16 weeks, each student develops his demonstrated aptitude in one of the four previously mentioned maintenance specialties. This ensures the availability of crew members to perform maintenance on these four categories of equipment.

The final step in the operator's training at Fort Belvoir is the qualification procedure which is used to evaluate and standardize his competence. A general plant qualification is awarded only after successful completion of the NPPOC and both written and oral examinations on the details of the job. After qualification, the operator is then assigned to a specific plant where his training continues. Once the details of the plant are learned, the operator "trainee" may apply for qualification as an Operator 2nd Class for this specific plant. Qualification is awarded only after successful completion of the exams given by the plant Qualification Board. A summary of the selection, training, and qualification cycle is shown in figure 4. Selection criteria for the NPPOC are outlined in figure 5.

b. Officer-in-Charge

Selection and training criteria for the Officer-in-Charge are also very stringent. The prospective O. I. C. must have a B. S. in engineering or science as well as graduate-level schooling in nuclear engineering. A 16-week training program at Fort Belvoir expands the student's knowledge received in civil schooling. Successful completion of the O. I. C. training course as well as both oral and written exams results in a general qualification. After assignment to a specific plant, the O. I. C. "trainee" continues his training in the operation and maintenance phases of his assigned plant. After a detailed examination by a Qualification Board, the O. I. C. "trainee" becomes qualified on his assigned plant. Figure 4 outlines the O. I. C. selection, training, and qualification cycle.

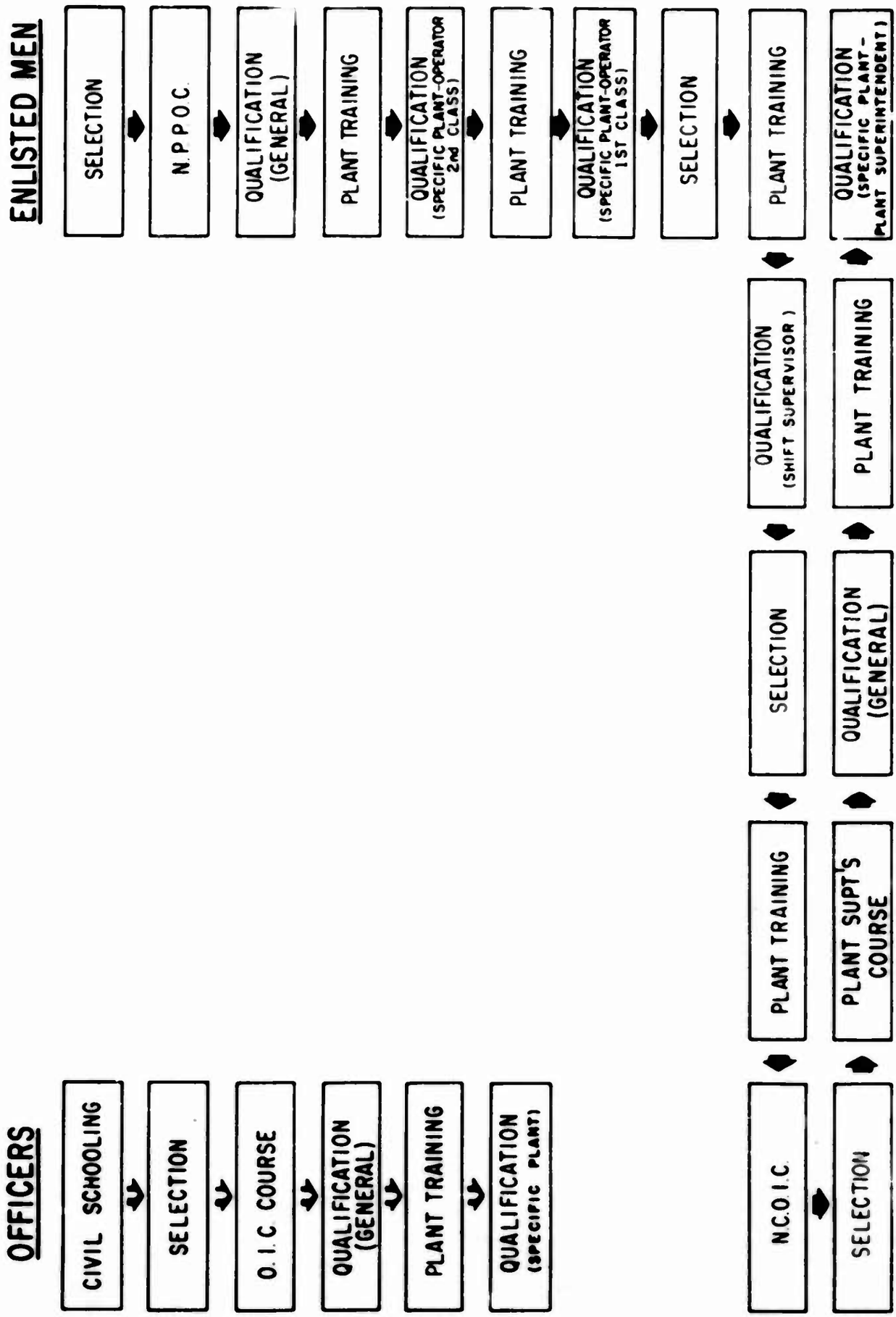

Figure 4. Selection, training, and qualification of operators and supervisors

1. VOLUNTEER
2. COMPLETED 2 YEARS ACTIVE DUTY
3. GRADE E-4 THRU E-7
4. MUST HAVE 4 YEARS TO SERVE FROM START OF COURSE
5. SECRET SECURITY CLEARANCE
6. NO RECORD OF CONVICTION BY COURT-MARTIAL
7. NO MORE THAN 35 YEARS OF AGE
8. NORMAL COLOR PERCEPTION
9. MEDICALLY FIT FOR ISOLATED DUTY AND DUTY IN EXTREME COLD
10. HIGH SCHOOL GRADUATE WITH CREDIT FOR FIRST YEAR ALGEBRA
11. HAVE ACHIEVED AN AIR FORCE PROFILE OF 7 OR HIGHER IN ALL TECHNICAL PORTIONS OF THE STANINE TESTS
12. EXPERIENCE, TRAINING, OR HIGH APTITUDE IN RELATED FIELDS
13. POSSESS TRAITS OF MOTIVATION, ABILITY TO LEARN, ADAPTABILITY, AND RELIABILITY.

Figure 5. Selection criteria for NPPOC

Figure 6 shows the PM-1 crew organization. The maintenance and operations personnel do not rotate as they do in certain other plants.

3. NUCLEAR POWER PLANT COST DATA

a. Discussion

This section presents a series of cost curves which may be used to estimate capital, fuel, and operating-and-maintenance costs for nuclear power plants of various ratings. Capital cost curves for conventional power plants and curves reflecting the break-even fuel-oil price for nuclear versus conventional power plants are also presented. The basis for the cost curves presented in figures 7 through 16 is discussed below.

The cost data are limited to plants rated at or below 40,000 kw(e), since this is expected to be the power range of interest for Air Force applications. The capital costs include equipment, installation, buildings (skid enclosure-type for diesels), plant startup, and indirect costs. A capital charge rate of 7 percent, which is normal for public utilities, is used to calculate power costs.

The nuclear fuel-cycle costs are based on (1) the latest enriched uranium costs published by the AEC, (2) $12/gm credit for plutonium, (3) $20,000 per day reprocessing plant charge with a 1,000-kg-per-day capacity and a 2-day turnaround assessment, (4) $25/kg fuel shipping cost, and (5) the normal losses ascribed to uranium and plutonium recovery. Fuel use charges are excluded. A three-zone core, with an average fuel burnup of 15,000 Mwd/metric tone is appropriate. No future fuel cost reduction is credited, although nuclear plant manufacturers predict a 15 to 25 percent reduction over the next 10 years.

The cost data presented are for two types of plants: those rated above 10 Mw(e) and those rated below 10 Mw(e). The smaller plants feature modular construction to minimize on-site construction or to enhance plant portability, while those above 10 Mw(e) are the conventional stationary plants.

The cost data for nuclear plants rated above 10 Mw(e) are for the natural-convection, BWR type using low-enriched fuel. This type of plant inherently exhibits a lower power cost than other types of nuclear plants in

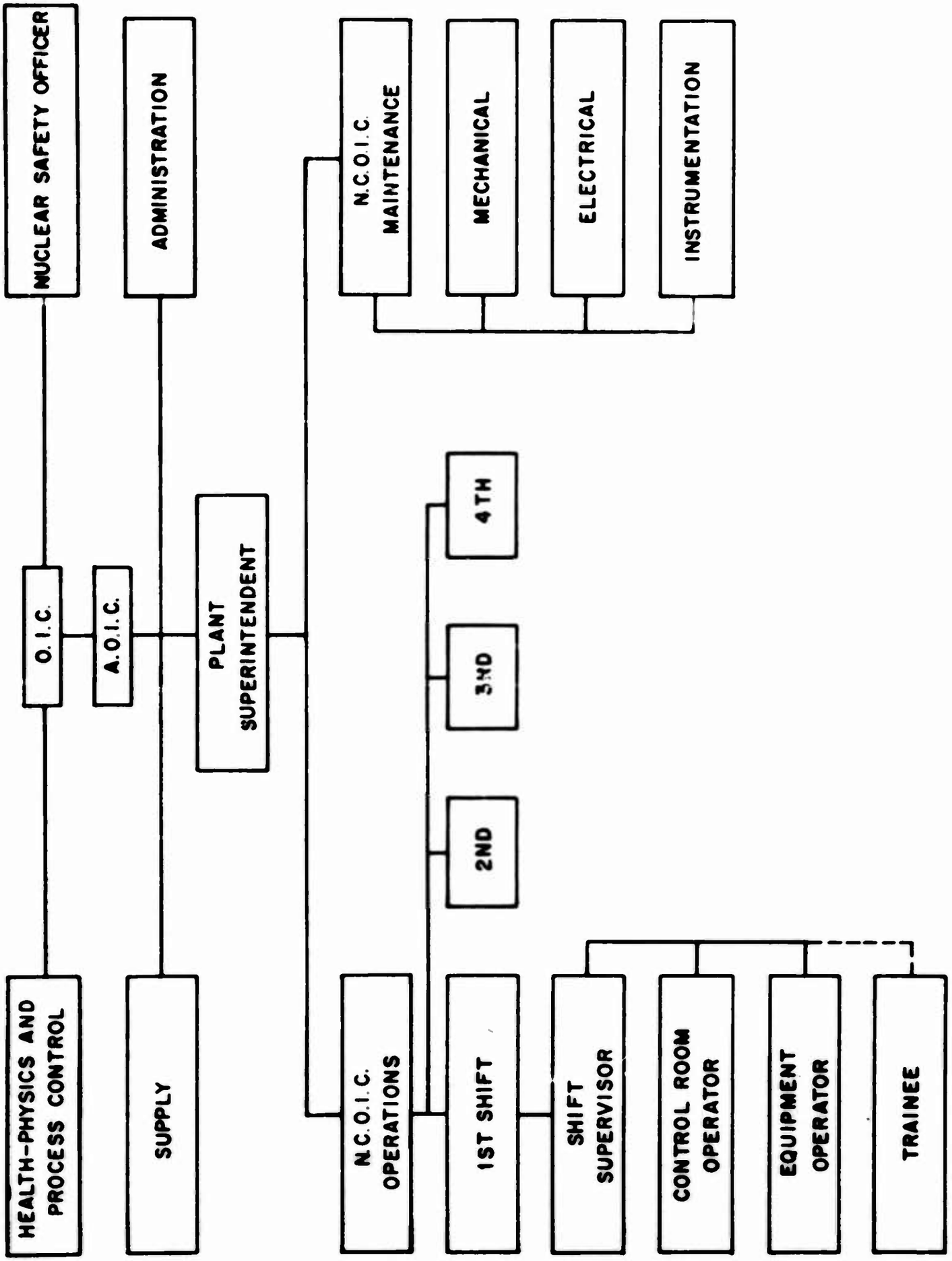

Figure 6. PM-1 crew organization

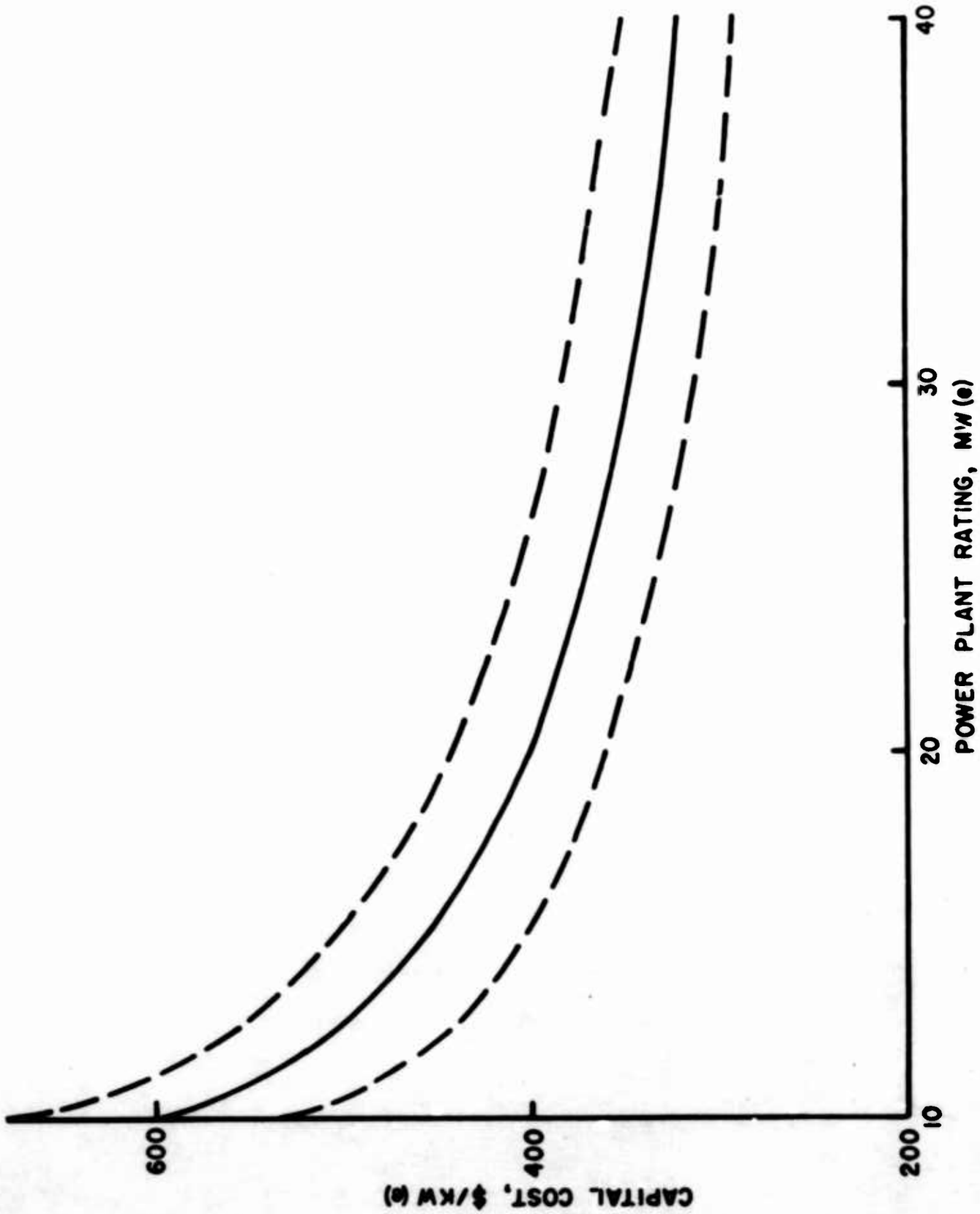

Figure 7. Nuclear commercial power plant capital cost

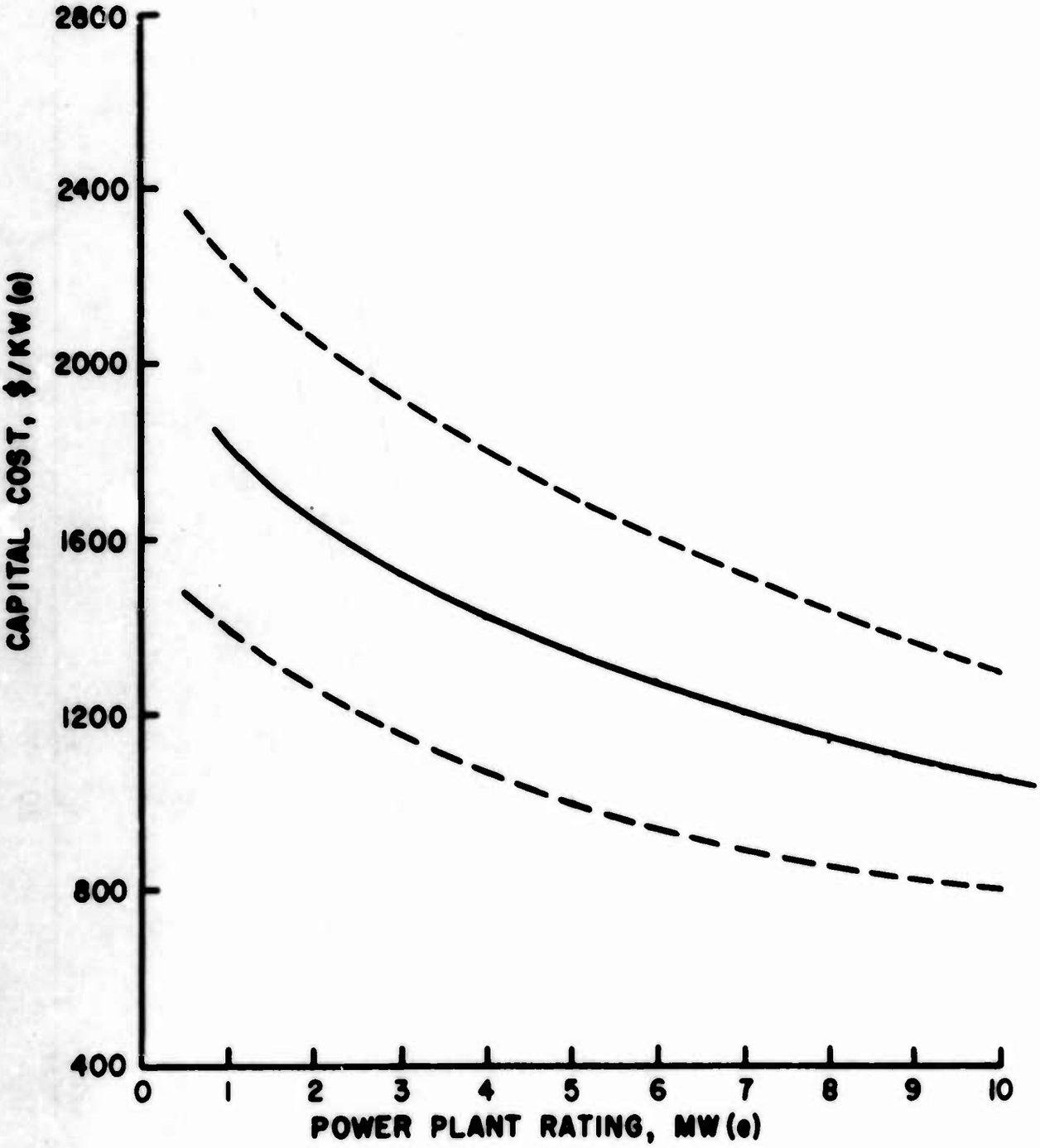

Figure 8. Nuclear military power plant capital cost

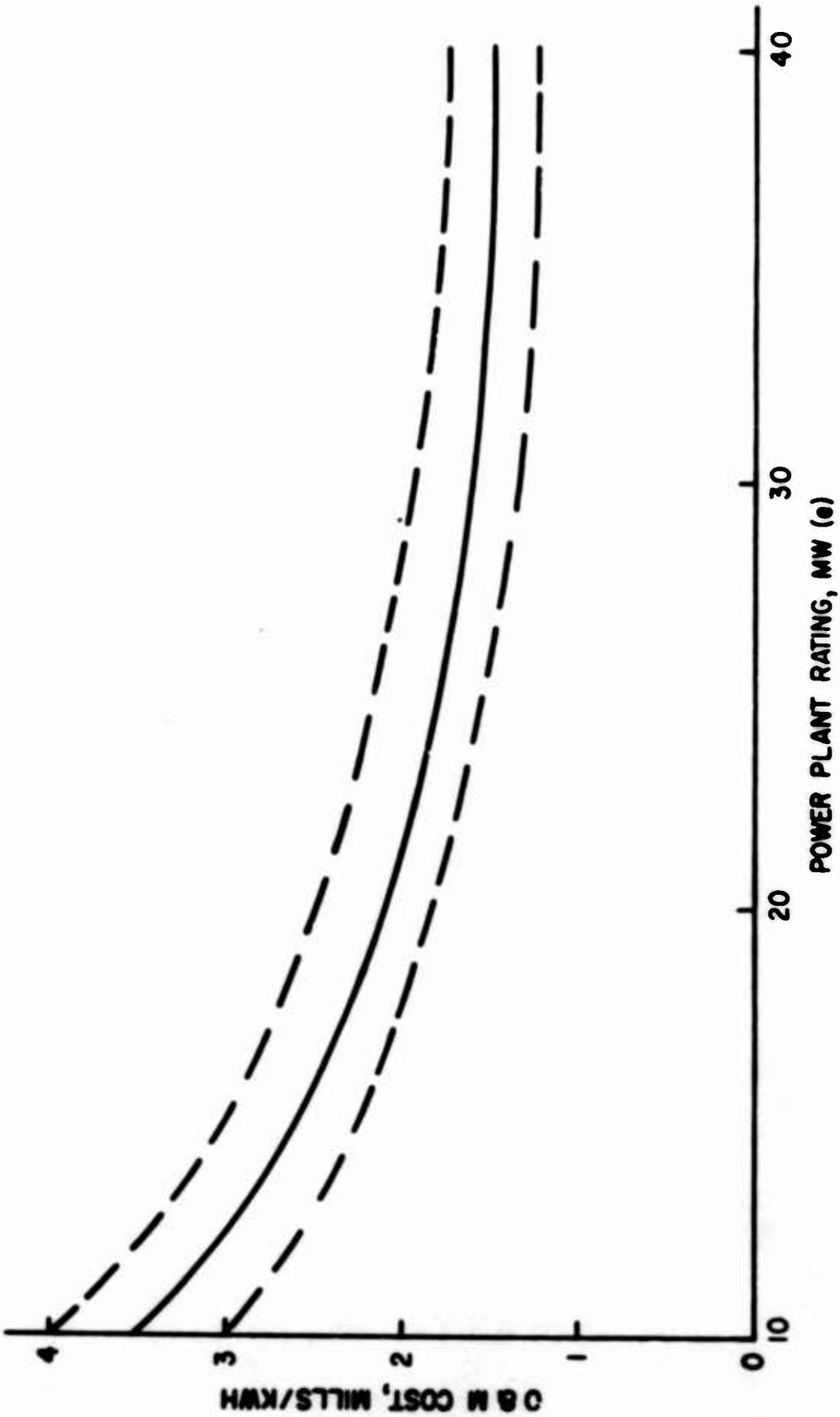

Figure 9. Nuclear commercial power plant operating and maintenance cost

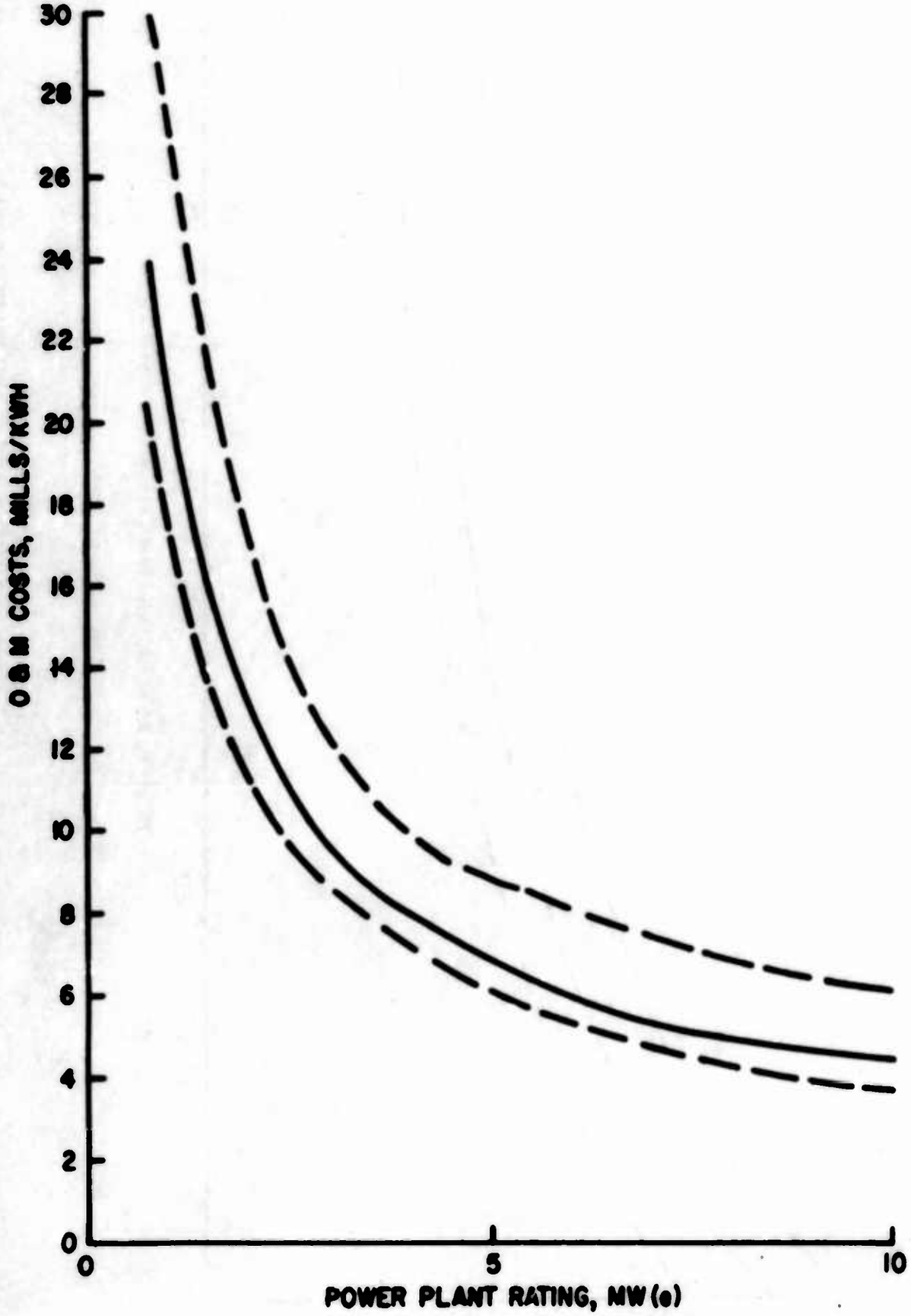

Figure 10. Nuclear military power plant operating and maintenance cost

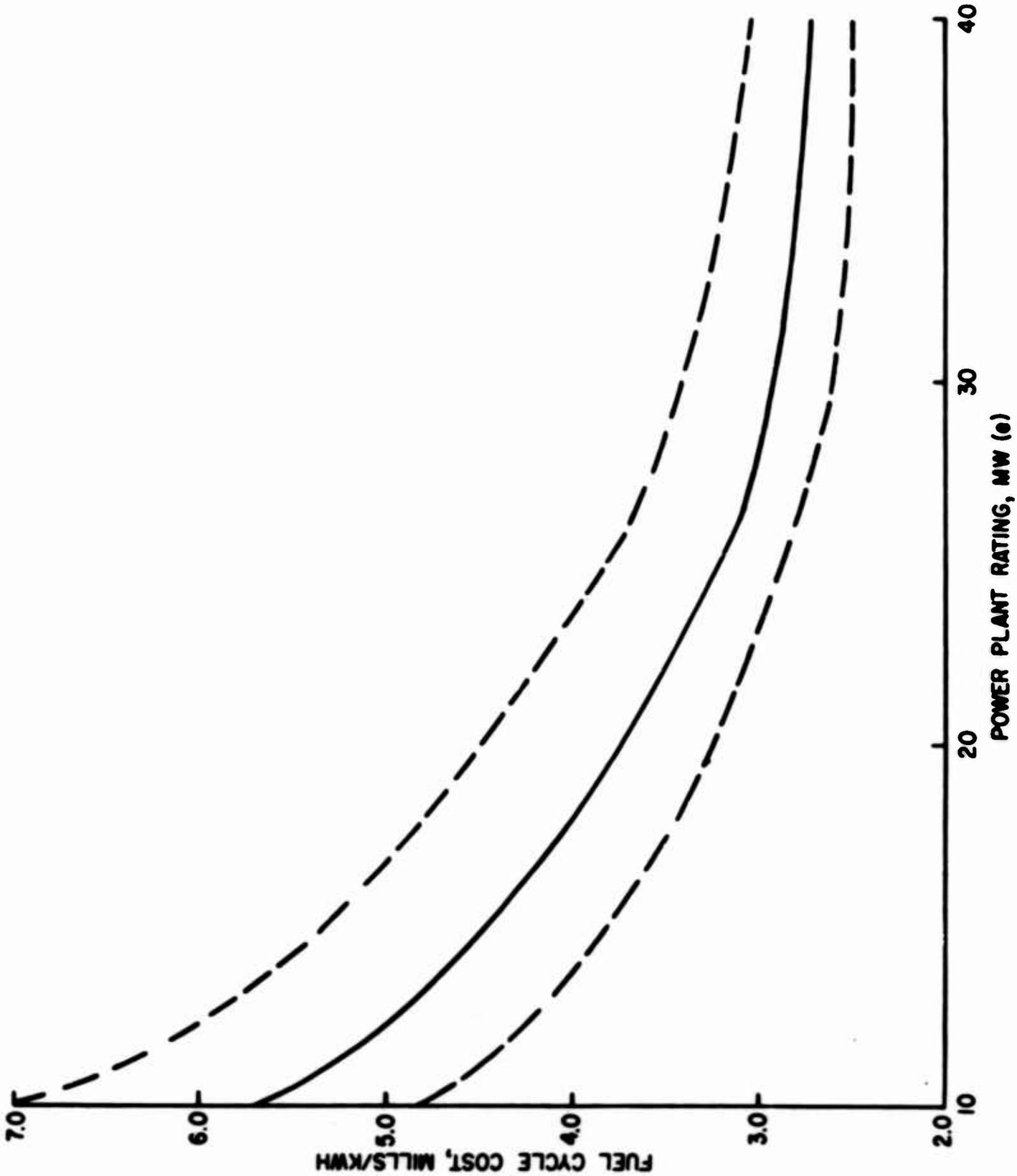

Figure 11. Nuclear commercial power plant fuel cycle cost

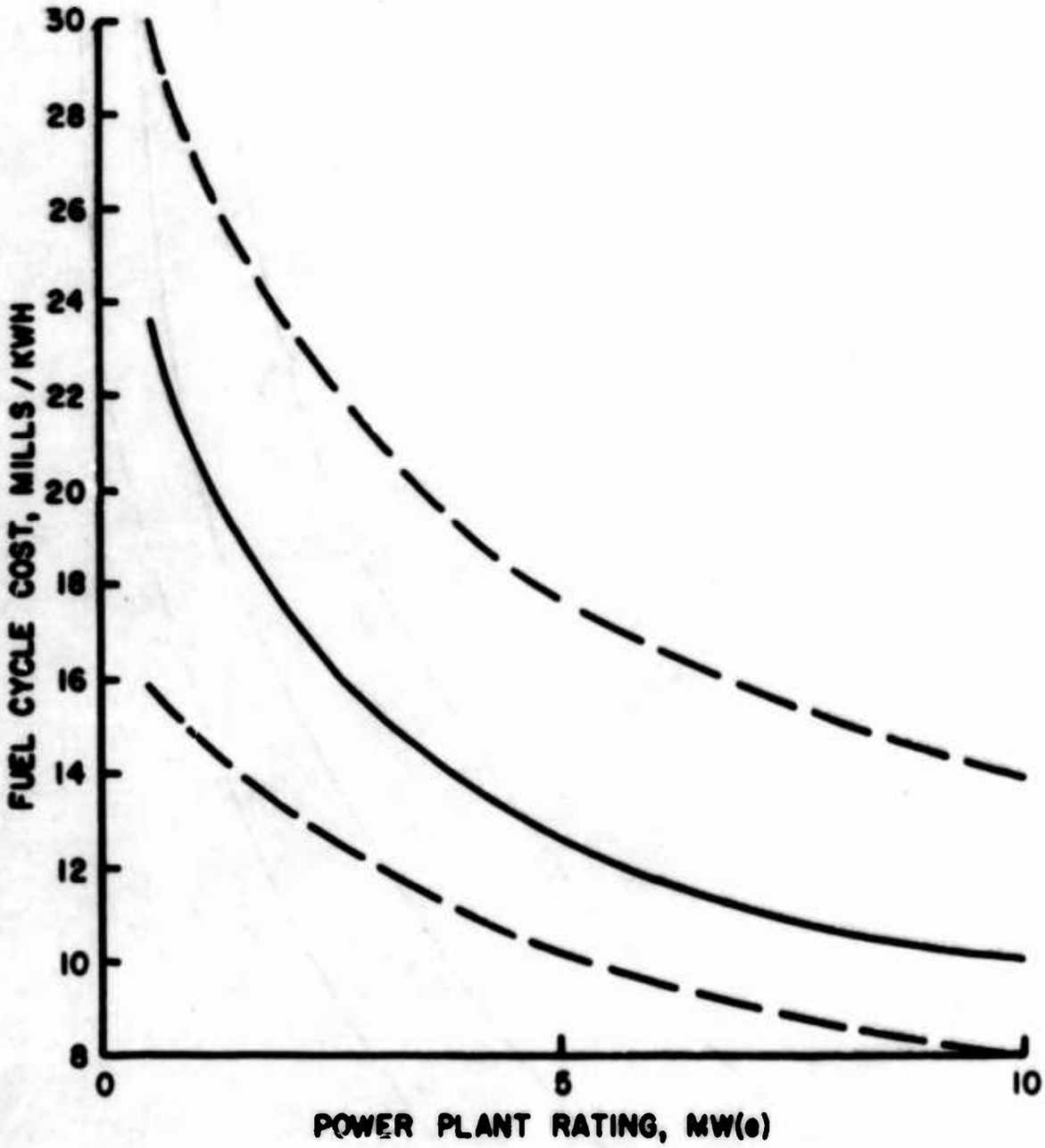

Figure 12. Nuclear military power plant fuel cycle cost

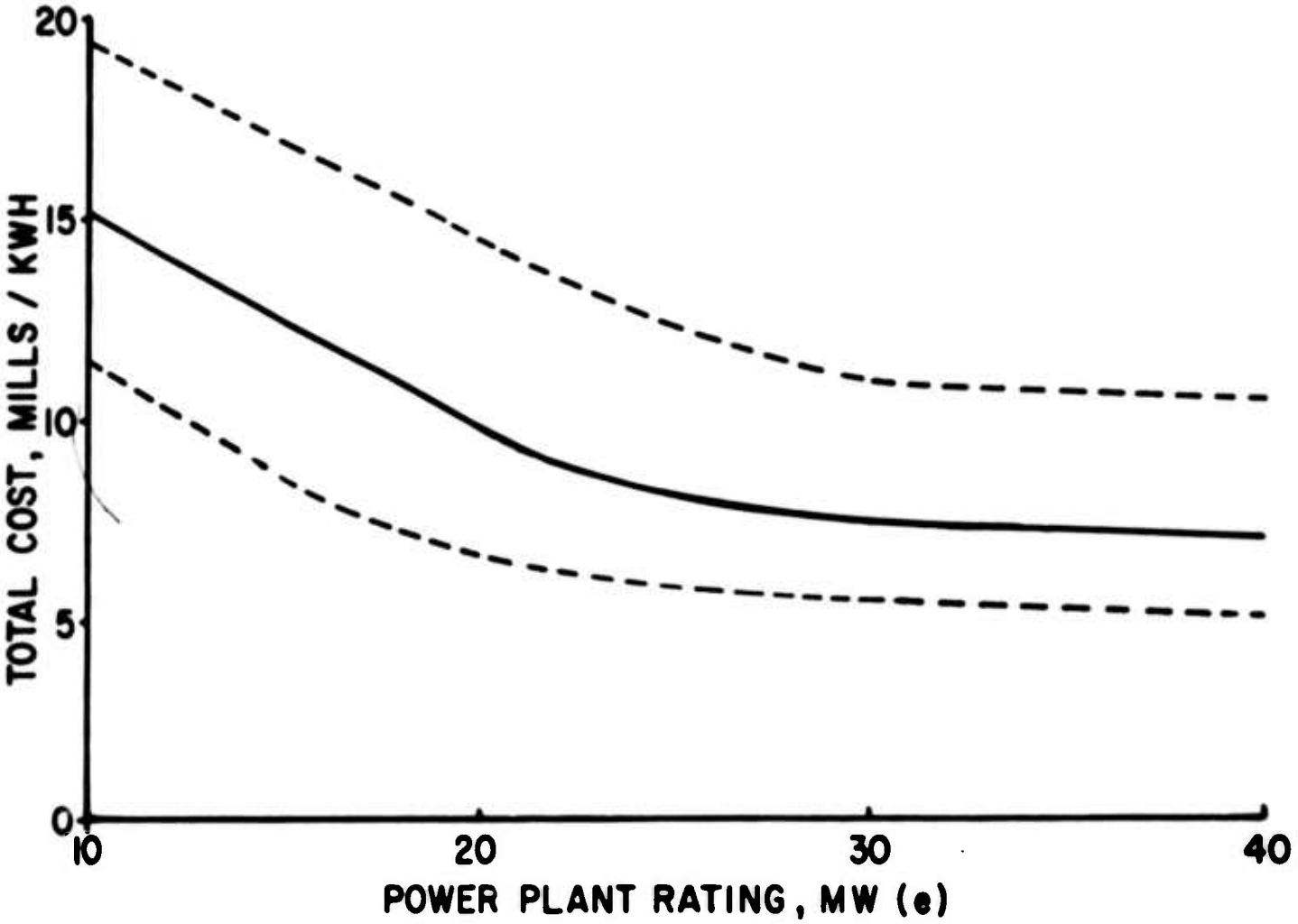

Figure 13. Nuclear commercial power plant total cost

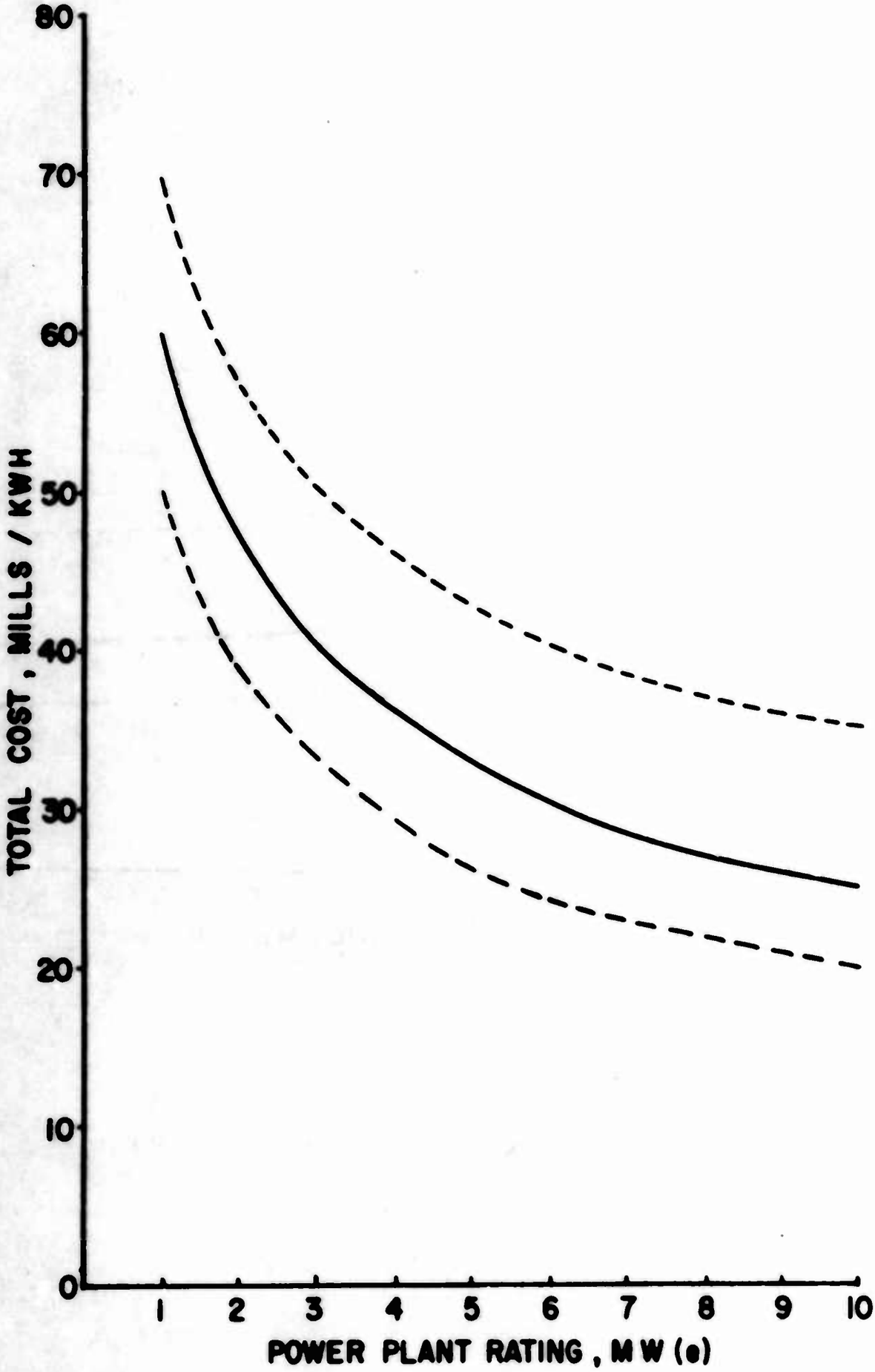

Figure 14. Nuclear military power plant total cost

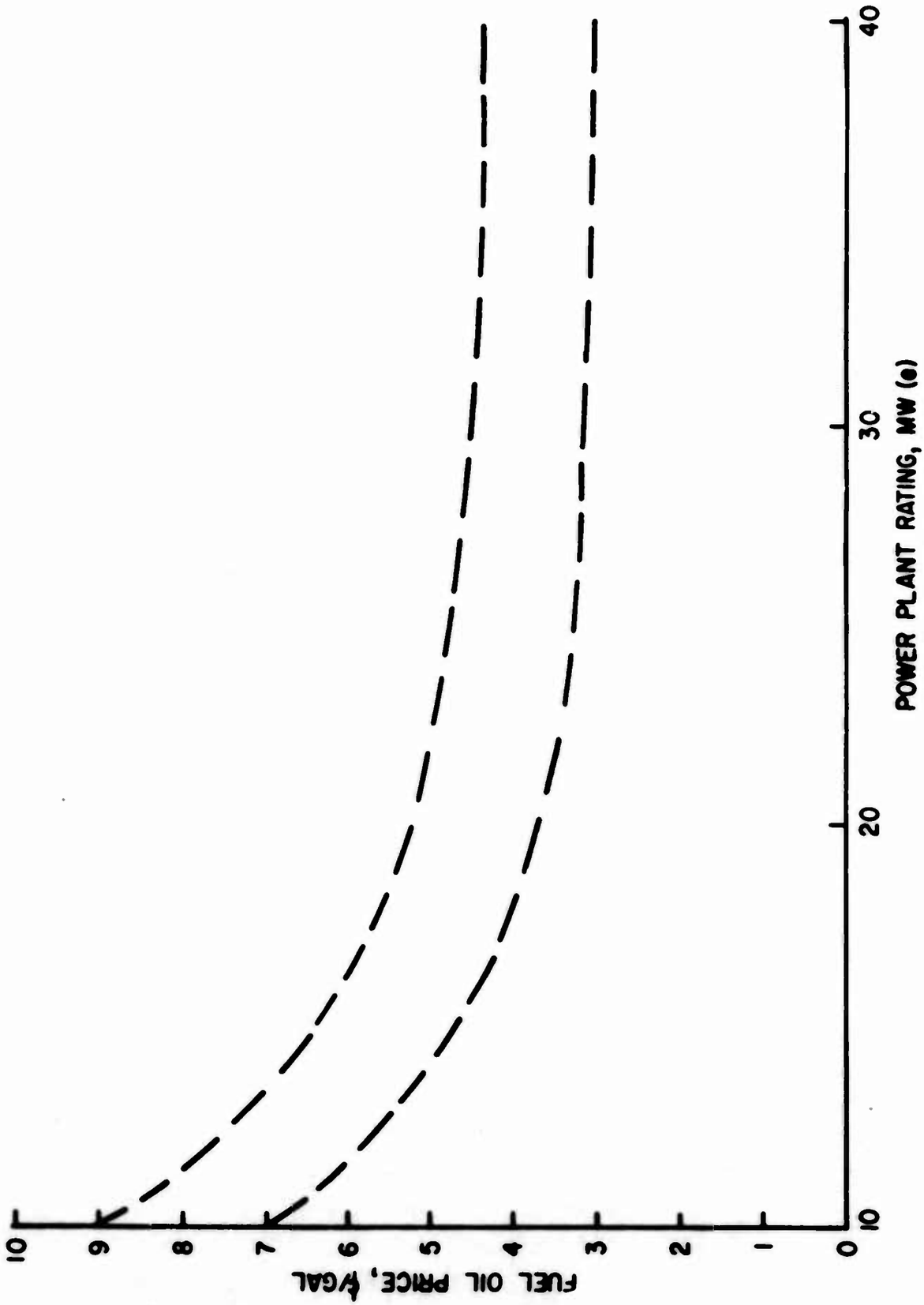

Figure 15. Nuclear versus conventional oil-fired power plants break-even price of fuel oil

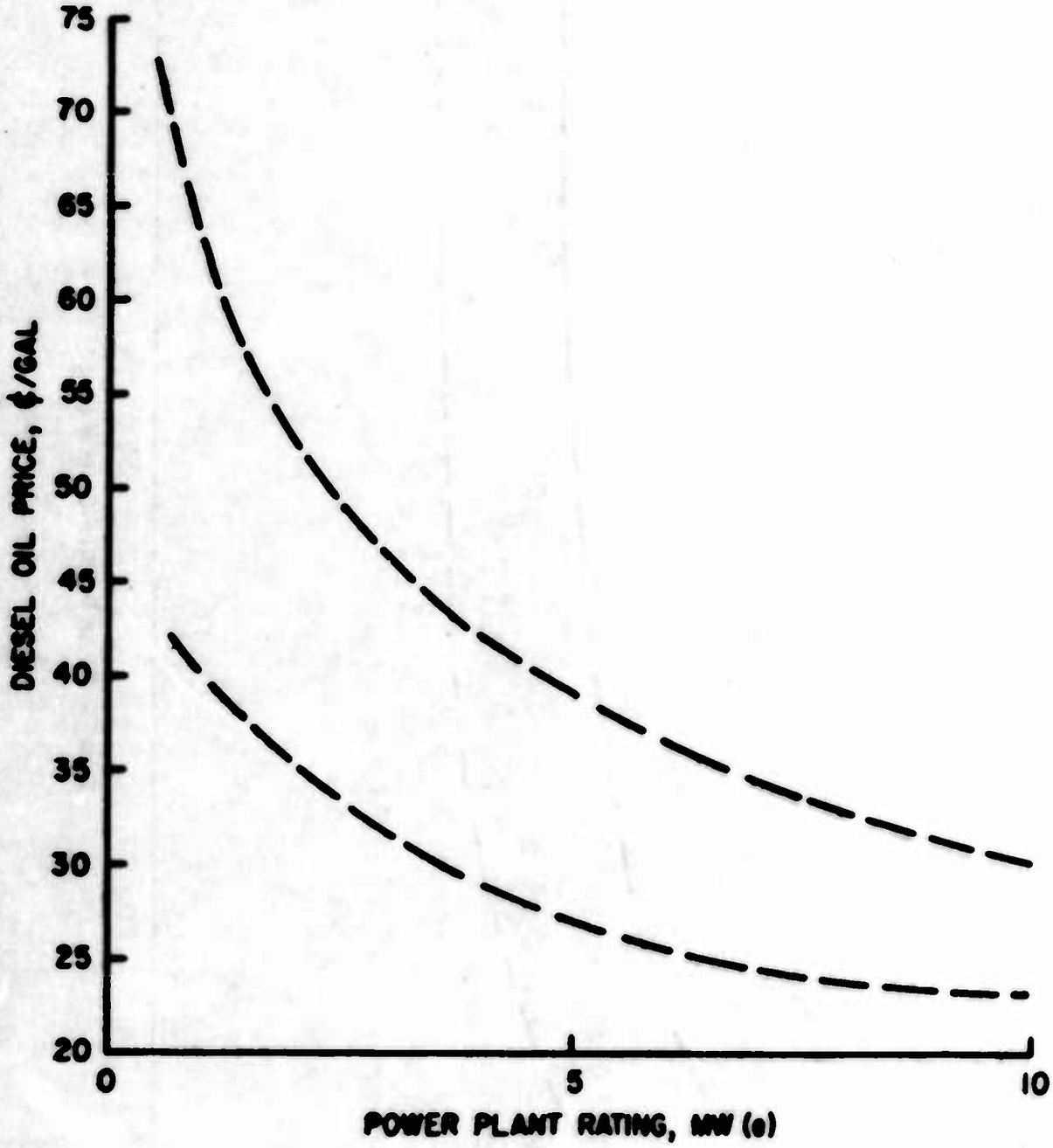

Figure 16. Nuclear versus diesel power plants break-even price of diesel oil

the size range under consideration. The corresponding conventional plant is an oil-fired, steam-boiler, turbine-generator type with a heat rate of 13,000 to 14,500 Btu/kwh. The cost curves for plants with ratings from 10 to 40 Mw(e) are shown in figures 7, 9, 11, and 13.

The cost data for plants rated below 10 Mw(e) are based on multiple units of 1.0 to 2.5 Mw(e) each. The nuclear plants are either PWR or BWR, and air or water cooled. The air-cooled plants exhibit a higher power cost because of the inherent lower efficiency. The conventional plants are small diesels with a heat rate of 10,000 to 11,000 Btu/kwh. The cost curves on plants with ratings under 10 Mw(e) are presented in figures 8, 10, 12, and 14.

The break-even oil prices for nuclear versus conventional power plants are shown in figures 15 and 16. Operating-and-maintenance costs ranging between 2.9 and 0.7 mills/kwh are appropriate for the larger oil-fired plants and between 15.7 and 2.7 for the smaller plants. Nuclear power is competitive economically with conventional oil-fired power in the larger sizes, but is not competitive with diesel power in the smaller sizes except for situations where fuel costs are very high. However, near-future development efforts are expected to reduce nuclear power costs to the point where small nuclear power plants will be competitive with diesel plants in 4 to 5 years.

b. Curves

It should be noted that dotted curves indicate probable high and low cost; solid curves represent the best estimate.

4. PLANT AND PERSONNEL NUCLEAR SAFETY SYSTEMS

The purpose of this section is to present and discuss the safeguards inherent in a nuclear power plant, the precautions taken to protect the general public and the operating personnel, and the inspection procedures established to assure that the proper safeguards are being observed. The safety program, as established at the PM-1 Nuclear Power Plant, Sundance AFS, Wyoming, was used as a guide in writing this section. Further information on PM-1 nuclear instrumentation may be found in the appendix.

a. Reactor safety system

(1) The reactor safety system as a whole protects the plant from possible unsafe conditions either by preventing control-rod withdrawal or by scramming the rods. The system will annunciate these conditions and aid the operator in determining the location of a potential danger situation.

(2) The rod withdrawal interlock system initiates a rod hold signal when any of the following conditions occur:

(a) Nuclear conditions

1 The count rate of either source range channel is 5 counts per second or less. This low count rate interlock is employed to prevent a blind startup of the reactor.

2 The period as measured by either of the source range channels (1 or 2) is 30 seconds or less. This short period interlock is employed to keep the reactor on a safe period and to initiate action before a scram becomes necessary. This function is inhibited when the power level is in the intermediate range.

3 The period as measured by either of the intermediate range channels (3 or 4) is 30 seconds or less. This function is inhibited in power range.

(b) Process conditions

1 The steam generator water level is 6 inches or less. This corresponds to a level 3 inches below the feedwater inlet nozzle which prevents reactor startup when the steam generator is dry or its tubes partly uncovered.

2 The differential pressure in the primary coolant loop is 15 psi or less. This interlock is employed to prevent rod withdrawal when there is no coolant flow.

3 Process inputs are primarily intended for use during plant startup. However, they are not inhibited at any time.

(3) The reactor safety system will initiate a scram whenever any of the following conditions occur:

(a) Nuclear conditions

1 The period as measured by both of the source range channels (1 and 2) is 15 seconds or less. This function is inhibited when the power level is in the intermediate range. Testing of either channel 1 or 2, when the power is in the source range, modifies the scram logic so that tripping of the untested channel will cause a scram.

2 The period as measured by either of the intermediate range channels (3 or 4) is 15 seconds or less. This limitation on the power use is inhibited when the power level is in power range, and the auctioneered power level from channels 5, 6, and 7 is above 10 percent of full power. When this limit is exceeded, the period scram logic element is disabled. Testing of either channel 3 or 4, when power level is in the intermediate range, alters the scram logic so that tripping of the untested channel will cause a scram.

3 The power level from any two of the three power range channels (5, 6, and 7) is 120 percent of full design power or greater. This scram limits temperature. Testing of any of the power range channels modifies the scram logic so that scram will occur if either of the untested channels should trip on high power.

(b) Process condition

1 The reactor outlet temperature, as measured by both the expanded and full range temperature instrument sets, is 500°F or greater.

2 The reactor coolant system pressure, as measured by both the expanded and full range pressurizer pressure instrument sets, is 1,210 psig or less.

3 The primary coolant pump power, as measured by the thermal converter, is 90 percent of rated power or less.

4 The pressure drop across the primary coolant pump is 15 psi or less.

5 For paragraphs 2, 3, and 4 above, a manual bypass, located on the control console, is available. This bypass is necessary to

clear the scram channel during startup. The bypass is removed when the coolant pump is running and the pressurizer pressure is above 1,210 psig.

(4) The reactor safety system provides contacts to activate the following annunciator alarms on the control console:

(a) Short period from channels 1 and 2 for either rod withdrawal interlock or scram conditions.

(b) Short period from channels 3 and 4 for either rod withdrawal interlock or scram conditions.

(c) High power from channels 5, 6, and 7 for either annunciation warning or for scram conditions.

(d) Rod withdrawal interlock.

(e) Scram.

b. Radiation monitoring systems

(1) Air monitoring

At present there are four systems of air monitoring in use at the PM-1 Nuclear Power Plant:

Off-gas monitor

Continuous air monitor

24-hour Lo-Vol samples

Spot Hi-Vol samples.

(a) Off-gas monitor

1 The purpose of the off-gas monitor is to detect fission products released during the venting of the reactor and associated systems. A silver nitrate reactor, for the removal of fission product iodine, is incorporated into this system. The venting system discharges into the air side of the shield water cooler where the off-gas is diluted with the cooling air and discharged into atmosphere. This dilution plus atmospheric dilution from the stack to the perimeter fence is by at least a factor of 10^6.

2 The original off-gas monitor was a G-M probe installed in the off-gas vent line. It was felt that this monitor was not sufficiently

sensitive to detect activity concentrations required. This unit has been replaced by a Nuclear Measurement Corporation 28-liter chamber with a gamma scintillation detector. This instrument has a sensitivity of approximately 10^{-9} μc/cc. The venting process is manually controlled and the vent gases can be released slowly to take advantage of the 10^6 dilution factor to control the effluent activity.

3 Also available are activated carbon filters through which the vent gases can be passed. These filters can then be analyzed in the single-channel analyzer.

(b) Continuous air monitor

1 A Tracerlab MAP-1 continuous air monitor is in use at the PM-1. This unit is rigged for sampling from any of four locations: primary building roof fan, primary building wall, secondary building, and in the immediate vicinity of the monitor. The unit is normally lined up to sample air from the primary building roof fan. This gives a continuous indication of the relative air activity concentration in the entire primary building. A qualitative indication of the airborne contamination is obtained from this instrument.

2 The other three sample lines can be used for sampling directly or can be fitted with flexible hose to monitor specific work areas where airborne activity is present or suspect.

(c) 24-hour Lo-Vol samplers

A number of Gelman bantam air samplers are in use in fixed locations throughout the plant. These samplers operate continuously to draw air through a fixed filter paper. The filters are changed and counted periodically.

(d) Spot Hi-Vol samplers

Gelman Hi-Vol Samplers are used for grab samples when work is to be performed in an area of known or suspected airborne contamination. The samples are analyzed and the results evaluated to determine the type of respiratory protection required.

(2) Fluid monitors

(a) Primary coolant

The primary coolant is analyzed daily for gross beta-gamma activity and periodically for particular fission and corrosion products. The results are tabulated and checked frequently to detect any significant changes or trends in the radiation levels of the primary coolant or in the reactor. Shield water is checked frequently to determine if there is any primary coolant leakage.

(b) Secondary systems

There is normally no liquid effluent discharge from the PM-1 secondary systems, with the exception of the make-up evaporator blow-down. Steam generator blow-down, which would give the first indication of a primary-to-secondary leak, is monitored continuously for radiation by a gamma scintillator in the blow-down line. All other systems, including the site raw water supply, are analyzed routinely for activity.

(c) Waste disposal system

The only liquid effluents, other than from the make-up evaporator, discharged to the environment are from the washing machine and the waste disposal evaporator system. Water from the washing machine is sent to a hold-up tank and monitored before discharging to the dry well or, if hot, to the waste disposal sump tank. The waste disposal evaporator condensate is at times discharged to the dry well, if the chemical purity of the condensate is not of a quality which can be used in the secondary systems. In any case, the discharge to the dry well is maintained below an activity of 10^{-7} μc/cc or it is diluted with raw water until the average effluent activity falls below this figure.

(3) Plant radiation surveys

(a) Baseline, background beta-gamma surveys were made and tabulated, both inside the plant and its environs, prior to criticality. In addition, baseline surveys have been conducted at various reactor power levels during the initial operation of the plant. The results of these surveys

are compared with subsequent surveys to detect changes or trends in background levels throughout various areas of the plant. To date, there have been no significant increases or changes in background since the initial surveys.

(b) At present, beta-gamma surveys are accomplished on a daily routine basis during plant operation. Special surveys are conducted, as required, determined by plant conditions and/or requirements. These surveys are accomplished with Eberline E-500-B and Jordan Radgun Survey Meters. These surveys are the basis for establishing radiation areas, including high radiation, and for determining working times in these areas.

(c) Smear surveys are performed daily inside the plant and weekly in the operations area to determine the existence of spreadable contamination in an area or on equipment. The smears are taken by wiping the suspect area with a filter disc and counting the disc in a G-M detector-scaler combination to determine the extent of the contamination actions. Any equipment or material leaving a radiation or contaminated area must be checked for contamination and tagged "O.K." before it is allowed to be removed from the area.

(4) Area radiation monitoring system

(a) A Tracerlab area radiation monitoring system is used to measure and record the radiation level in various strategic locations throughout the facility. The G-M detectors are set to alarm when a level other than normal background in the detector location is exceeded.

(b) Health physics personnel will respond to all radiation alarms and determine the cause of the alarm and the associated hazards. The locations that are continuously monitored, recorded, and individually alarmed when radiation levels are exceeded are

1 Operations Area Entrance Gate Guard House.

2 On stairs from PM-1 to Operations Area.

3 Secondary building (northwest corner).

4 Control Room.

5 Primary building (over steam generator tank).

6 Primary building (over spent fuel tank).

7 Waste disposal tank.

8 Peripheral fence nearest reactor.

9 Off-gas sampler.

10 Decontamination room.

(c) The recorder, remote meters, alarms, etc., of the area radiation monitoring system are located in the control room.

c. Personnel monitoring and protection

(1) The nuclear radiation shielding for the PM-1 has been designed to provide adequate shielding so the radiation doses received by plant personnel are well below the maximum permissible doses specified in the Federal Regulation Title 10, part 20. Special work permits are required when personnel work in certain areas, such as the primary building. This control will be directly governed by the plant health physicist. During full power operation, personnel access to the primary building above the reactor and steam generator tanks is limited.

(2) Pre-assignment clinical examinations of the initial PM-1 crew members, including body fluids analyses for radionuclides and whole-body counts of the total body burden, have been made. These examinations will be repeated at periodic intervals to follow occupational uptake of radioactive materials through inhalation or ingestion. Baseline examinations for the present personnel were completed in 1960 and periodic reevaluations are being accomplished on established staggered schedules.

(3) All personnel working routinely in the plant wear self-reading dosimeters, beta-gamma film badges, and modified ORNL badges for neutron dosimetry. Crew members who work in radiation areas or on radioactive equipment are required to wear protective clothing and, in addition, are surveyed by a health physicist upon completion of their tasks. A G-M monitor (frisker) is available at the exit of the designated hot area (clothing change point) and a hand and shoe monitor is located at the entrance of the decontamination room. A personnel decontamination locker is located in the

decontamination room. This locker contains various decontamination solutions and materials, and instructions for their use.

(4) A Radiation Work Permit (RWP) is issued for any entry into a radiation area or when there is any possibility of danger from spreadable contamination, airborne contamination, and/or any other type of radiation hazard. The RWP indicates the radiation levels in the area, type of hazard, type of work allowed, monitoring devices required, and any other precautions considered necessary. The worker signs in on the RWP upon entering and signs out upon leaving the radiation area.

(5) All personnel working with hot equipment clean up in the decontamination room. Before leaving the plant, they wash up again as does everyone else working with equipment. Contaminated clothing is cleaned in the plant washer until acceptable, or disposed of as solid waste. Contaminated equipment is cleaned to an acceptable level or stored in hot waste disposal drums in a protected area for eventual out-shipment. Solid contaminated waste material is packed in standard Air Force supplied shipping containers and meets ICC shipping regulations for radioactive materials.

(6) As a routine precaution, M-9 gas masks are worn when sampling or venting the primary system. Protective equipment worn at other times is governed by the airborne activity as determined by the previously described procedures and equipment.

(7) The health physicist takes daily smear samples, as mentioned above, throughout the plant. In the event any spreadable contamination is found in any part of the secondary building during a survey, a series of additional smears will be made in each crew member's car, home, etc.

(8) All entries to the plant have physical barriers and are prominently marked with standard radiation warning signs. All doors opening into the plant are kept locked, with one exception. The one exception is the normal personnel access door entering at the dosimeter rack. Visitors to the plant are issued film badges at the operations area access point and are briefed on the location of restricted areas.

(9) Film badges are issued and collected on a daily basis and normally processed, at both two-week and quarter-year intervals, at the USAF

Radiological Laboratory. The results of the processing are posted on each individual's "Record of Ionizing Radiation Exposure." Visitors are issued film badges on a one-time-wear basis.

(10) During a refueling operation, the shield water level in the reactor tank and the spent fuel tank will be maintained at their normal operating level to provide the required shielding for personnel. Access to the core for its removal from the reactor vessel will not be allowed until approximately 8 hours after shutdown. This period will allow for an orderly plant shutdown and primary system cooldown. All reactor vessel components requiring removal during the refueling operation will be retained in the reactor tank under shield water, thereby minimizing personnel exposure. Health physics personnel will continually monitor the area throughout the entire refueling operation.

5. DISADVANTAGES

a. Cost

It should be pointed out at this time that the economics of nuclear power cannot be treated with any degree of precision. One reason is that actual performance and cost data for various reactor types are not available. Another reason is that the technology of only a few reactor designs has advanced to the point where even construction costs of a full-scale plant can be estimated with a fair degree of accuracy. Certain costs, particularly those involved in the fuel cycle, quickly become obsolete as a result of new developments, e.g., in the nature and fabrication of fuel elements. Thus, costs which are applicable to one type of element may be different from those for another type in the same basic reactor system.

For the reasons stated above, all cost curves included in this report are bracketed by an upper and a lower limit. As a basis for comparison, an electrical power production cost of 7 to 10 mills/kwh is used as the point at which nuclear power plants become competitive with conventional plants. Examination of figures 13 and 14 shows that as the nuclear plant net electrical output increases, the cost per kwh decreases. Assuming an average fuel cost for conventional plants, nuclear power becomes competitive when plant output is in the range of 100 Mw. The reverse of the above is also true, which can

be seen in figures 15 and 16: as fuel oil prices rise, the power output at which nuclear power becomes competitive is lowered.

On a cost basis alone, military applications of nuclear power are limited to geographical areas of high fuel costs. It should be noted that mission requirements may override the cost factor; these applications will be discussed later. All nuclear plants developed to date by the ANPP have been in the 1 Mw(e) to 2 Mw(e) range and were all located in relatively high fuel cost areas:

(1) SM-1A, Fort Greely, Alaska.

(2) PM-1, Sundance AFS, Wyoming.

(3) PM-2A, Camp Century, Greenland.

(4) PM-3A, McMurdo Sound, Antarctica.

(5) The SM-1 is located at Fort Belvoir, Virginia, but is used only as a training reactor.

Several programs and development efforts are presently underway to reduce the initial costs and increase plant reliability. Cost reduction will be accomplished through standardization; computer programs will analyze system and component performance, with the results forming the basis for component improvement/development programs. Time is a factor, and as a result, the fruits of these labors will not be realized for several years.

The preceding cost comparisons between nuclear power and conventional power sources may be somewhat misleading. It is not reasonable to expect nuclear power to be competitive, except in special circumstances, until the potentialities of various reactor concepts have been more fully developed. What is required is that when cheap fossil fuels, which are still abundant in the United States, are showing signs of being exhausted, when air pollution from fossil fuel plants becomes critical, when base load conventional plants need replacing, economic nuclear power should be ready to fill the gap. This calls for future planning and, consequently, it is necessary that money and effort be expended now on the development of nuclear reactor systems so that they may, in the reasonably near future, produce power as economically as (or more economically than) conventional plants at that time.

b. Design and construction lead time

The design and construction lead time for a large, stationary nuclear power plant (greater than 10 Mw) is similar to that of a fossil-fueled plant. However, for the smaller, portable nuclear plants, as developed by the ANPP, the lead time for design and construction ranges from 3 to 4 years.

c. Unique requirements

Because of the high intensity radiation produced by a nuclear reactor, radiation shielding is required for personnel protection. The shielding surrounds the reactor core and can consist of water, concrete, lead, steel, earth, rock, or similar materials and combinations thereof. The required shielding is large, heavy, and, in most cases, expensive. The cost can be minimized through optimum plant layout, but it is still high even then.

According to the experts in the reactor field, the likelihood of a major reactor accident is extremely small. However, the possibility of a reactor incident does exist through the highly improbable combinations of mechanical and human failures. The principal element of danger to the general public and plant personnel is the possibility of radiation exposure and contamination through the release of reactor fission products.

Design of the containment vessel must take into consideration system failures or reactor incidents even though the probability of occurrence may be minute. The containment structure must be airtight and designed to withstand, without rupture, all shock waves, missiles, increases in temperature, and increases or decreases in pressure resulting from these occurrences. The containment structure encloses the entire primary system, i.e., reactor, steam generator, pressurizer, coolant, pump, and piping. It is a large structure and constitutes a considerable portion of the total cost. Studies indicate that containment varies from 8 to 17 percent of the total construction cost.

d. Personnel training

A nuclear power plant is a complex facility which requires highly trained and qualified personnel for its operation and maintenance. The Air Force has very stringent selection requirements for the Nuclear Power Plant

Operators Course conducted by the Army at Fort Belvoir, Virginia (see section 2, figure 5). The course is a comprehensive 1-year program which trains the student in plant operation and in one of four maintenance specialties. The number of operation/maintenance and supervisory personnel is limited as compared to conventional plant personnel. Manpower requirements should be established well in advance of plant construction to ensure that qualified nuclear plant personnel will be available when needed.

6. ADVANTAGES

a. Surface logistics

A nuclear power reactor requires no combustion air and emits no noxious exhaust fumes. In comparison, a diesel engine requires from 3 to 5 cubic feet per minute of standard air per kw at rated output, and the volume of exhaust gas liberated is approximately 9 cubic feet per minute per kw at rated output.

Depending upon the reactor core, nuclear plants, in general, require refueling once every 1 to 3 years. Since a new core is not radioactively "hot," it can be stored on-site in its steel container. A central power station using boilers requires approximately 10,000 Btu per kw hr, i.e., approximately 700 gallons per hour of fuel oil for a 10,000 kw plant. On the other hand, a diesel power plant will consume approximately 0.08 gallon of fuel per kw hr.

As a result of its complete atmospheric independence and the lack of fuel logistics problems, the nuclear power plant is an ideal power source for hardened installations with long duration "button-up" requirements and for remote area operation. Nuclear power eliminates the need for large and costly air supply and exhaust systems and the extensive fuel storage facilities required by fossil-fuel plants.

b. Power quality

Because of the core's "designed-in" negative temperature coefficient, a nuclear reactor has the inherent ability to follow load variations without an automatic control system adjustment or the repositioning of manual controls. This load-following capability results in high-quality power generation which is essential for computers and long-distance radar tracking.

As an example of the above, measured steady-state electrical output characteristics of the PM-1 nuclear power plant are listed below:

Voltage fluctuations - less than 0.5%
Frequency fluctuations - less than 0.1%
Harmonic content - 1.5%

Several load step-change tests were conducted on the PM-1 with the following results:

<u>600 to 1000 kw step</u>

Voltage fluctuation (120v base)

+0.2%
-0.8% 1.5 sec recovery time

Frequency fluctuation (60 cycle base)

-0.12% 6 sec recovery time

<u>0 to 1000 kw step</u>

Voltage fluctuation (120v base)

+0.2%
-2.2% 3.5 sec recovery time

Frequency fluctuation (60 cycle base)

-0.56% 6 sec recovery time

c. <u>Noise and vibration</u>

A nuclear reactor produces no noise or vibrations; however, its auxiliaries (pumps and compressors) do produce small amounts. The turbine-generator is not considered, since both fossil-fueled and nuclear plants have them and they produce equal amounts of noise and vibration. Human tolerance of noise and vibration for a sustained period is low; as a result, nuclear power is well suited for installation in an enclosed area.

7. CONCLUSIONS

A nuclear power plant is a very complex piece of machinery; its present

day cost is prohibitive in the lower power ranges; the training of personnel is extensive; and because of the radiation hazard, elaborate safety precautions must be established for the protection of plant personnel and surrounding civilian population areas. With these many drawbacks, the question arises as to the feasibility of nuclear power.

During the last few years, many public utilities have installed nuclear power plants, the majority of which are in the 100 Mw(e) range and above. In these power ranges, nuclear power becomes competitive with fossil-fueled plants even in the average fuel cost areas. However, nuclear plants for military use are a different matter.

All of the military plants developed to date by the ANPP have low power outputs in the 1 to 2 Mw(e) range which have extremely high initial costs. As a result, present applications of these plants are limited to "hardened" installations and remote areas with high fossil fuel costs. AF installations, in general, have base power loads in the 5 to 10 Mw(e) which is low for the economical use of nuclear power. Eventually, however, these conventional plants will have to be replaced because of age deterioration. When this time comes, nuclear power should be thoroughly investigated. Within the next few years, use of nuclear plants in the lower power ranges should be feasible as a result of plant initial-cost reduction.

Whether it is for commercial or military use, nuclear power is here to stay. The Air Force must be prepared to integrate the nuclear plant into its inventory as the cost of fossil fuels increases. It is necessary that money and effort be expended now on the development of nuclear reactor systems so that they may, in the reasonably near future, produce power as economically as conventional plants at that time.

Appendix

1. PM-1 NUCLEAR POWER PLANT

The PM-1 was the first portable medium power plant project initiated under the Army Nuclear Power Program and is the Air Force's first nuclear plant. The PM-1 furnishes electrical power and space heating for the Sundance Air Force Station radar site 6 miles from Sundance, Wyoming, in the northeast corner of the state. The plant is under the operational control of the Station Commander and is operated by an Air Force crew.

To provide a portable plant incorporating improvements over the SM-1 design, a contract was let to the Martin Corporation of Baltimore, Maryland, for the design, construction, and testing of the PM-1. The contract, which was funded jointly by the Atomic Energy Commission and the Air Force, was begun in June 1961. As in all portable plants, the modules were assembled and nonnuclear components were tested at the contractor's facility prior to shipment to the site.

The basic PM-1 plant (exclusive of housing and site preparation) is made up of 16 shipping packages. Six of these packages are for the primary plant, nine packages for the secondary plant, and the remaining package is the decontamination room. Each of the 16 packages has maximum dimensions of 8 feet 8 inches by 8 feet 8 inches by 30 feet, and weighs a maximum of 30,000 pounds. The package sizes and weights are such that they can be transported by a C-130 aircraft. All piping connections between packages are flanged so the plant can be assembled without welding.

As is normally done with portable plants, the plant's initial crew participated in the test fabrication as well as the final on-site construction. At 1843 hours on 25 February 1962, construction was essentially complete and the PM-1 went critical, becoming the Air Force's first operational reactor.

The PM-1 is a pressurized water system, but there are a few unique features which depart radically from the SM-1 type of system. These unique features include the package nature of the plant, tubular cermet fuel elements, magnetic-jack control-rod drives, cermet control blades containing europium titanate, and no reactor-plant containment vessel of the usual type.

The environment of the station's location on Warren Peak, where winter temperatures of -40°F are common, and the radar station's requirement for a precise, highly dependable power source have provided an excellent facility for the Air Force to test the desirability of nuclear power.

The technical information presented in the following sections was included in order that the reader might become familiar with the major systems and equipment of the PM-1 plant. The design was assumed to be frozen as of July 1962.

a. Primary system

The primary system consists of the reactor, main coolant pump, steam generator, pressurizer and associated 6-inch piping to connect these items and form a closed loop. The coolant flow is from the discharge of the coolant pump, through the reactor where it picks up heat, to the steam generator, and through the tubes where it transfers the heat to the secondary cycle, and then back to the suction of the main coolant pump. The primary system operates at an average temperature of 463°F with a constant flow of 2125 gpm. A pressure of 1300 psig is maintained by the pressurizer. At full power (100 percent), the coolant transfers 9.37 Mw of thermal heat. This amount of heat is capable of producing 1,250 kw of electrical power and 7 million Btu/hr of low pressure steam for site heating purposes. The coolant not only removes heat from the reactor core, but also cools the thermal shield and the pressure vessel.

Upstream from the coolant pump suction is an enlarged section of 8-inch horizontal piping which induces turbulence and loss of velocity head in order to release air entrained in the coolant. A 3-inch pressurizer surge line connected to this enlarged section allows the released air to go up the line to the pressurizer.

(1) Reactor pressure vessel

The reactor pressure vessel houses the reactor core, contains the reactor coolant at operating temperature and pressure, provides inlet and outlet passages for the coolant, and serves as a mounting for the control rod drive mechanisms. The vessel is essentially a right circular cylinder with

PM-1 DATA SHEET

General

Net electrical output, 0.8 pf	kw	1,000
Auxiliary power	kw	135
Gross generator	kw	1,135
Space heat req's	kw	2,050
Reactor heat output	kw (th)	9,370
Equivalent efficiency	%	32.6
Turbine heat rate	Btu kwh	4,520
Secondary plant heat rate	Btu kwh	32,272
Primary plant heat rate	Btu kwh	38,835
Electrical efficiency	%	13.7

Primary system

Number of loops		1
Number of coolant pumps		1
Reactor inlet temperature	^{o}F	447
Reactor outlet temperature	^{o}F	479
Operating pressure	psia	1,300
Coolant flow	10^6 lb/hr	1.064

Secondary system

Steam generator inlet temperature	^{o}F	293
Steam generator outlet temperature	^{o}F	417
Steam generation rate	lb/hr	34,332
Full load pressure	psia	300
Turbine throttle pressure	psia	290
Full load throttle flow	lb/hr	25,726
Extraction pressures (1)	psia	86.6
Extraction flow (1)	lb/hr	2,970
Turbine back-pressure	in. hg. abs	9
Full load condenser flow	lb/hr	22,756
No. of condensate pumps		1 (1 reserve)

PM-1 DATA SHEET (cont'd)

Secondary system (cont'd)

No. of feedwater heaters		1
No. of boiler feed pumps		1 (1 reserve)
Generator rating		
Power output	kw	1,250
Power factor		0.8
Kva rating	kva	1,562
Voltage	volts	2,400/ 4,160

ellipsoidal bottom and top. The top head is removable (bolted) to permit refueling of the reactor. The general dimensions of the vessel are

Outside diameter - 40 inches
Height - 106 7/16 inches
Inside diameter - 35.625 inches
Wall thickness - 2 3/16 inches

The vessel is penetrated by two 6-inch nozzles (for coolant inlet and outlet) in the shell portion; and by six control rod openings (1 3/8 inches diameter) and an access port (3 1/2 inches diameter in the top head. The top head is attached to the vessel by a double gasketed, bolted joint.

The pressure vessel internals consist of the inlet water box, the flow distribution plate, and the thermal shields. The vessel water box directs coolant inlet flow to the bottom of the vessel and core entrance, while the flow distribution plate provides a uniform flow around the thermal shields and to the reactor core. The thermal shields are provided to reduce nuclear radiation heating of the pressure vessel wall. The waterbox and flow distribution plate are permanent parts of the vessel, while the thermal shields are made in segments so that they may be removed if necessary.

The vessel is made of type 347 stainless steel and is surrounded by fiberglass insulation which is enclosed in a stainless steel can. The can protects the insulation from the surrounding shield water. The vessel is also surrounded by 5-inch lead shielding, except on the spent fuel tank side where shielding is 2 inches thick.

(2) Reactor core

The PM-1 is a highly enriched core using tubular-type fuel elements. The core includes a burnable poison to allow a greater loading of uranium. The core has a nominal operating temperature coefficient of $2.1 \times 10^{-4}\ \Delta\rho/^{\circ}F$.

The core consists of two major assemblies: (1) core shroud; and (2) upper skirt. The core shroud contains six peripheral fuel bundles (each with an integral control rod) and one center fuel bundle which contains the primary neutron source. The shroud rests on the pressure vessel orifice

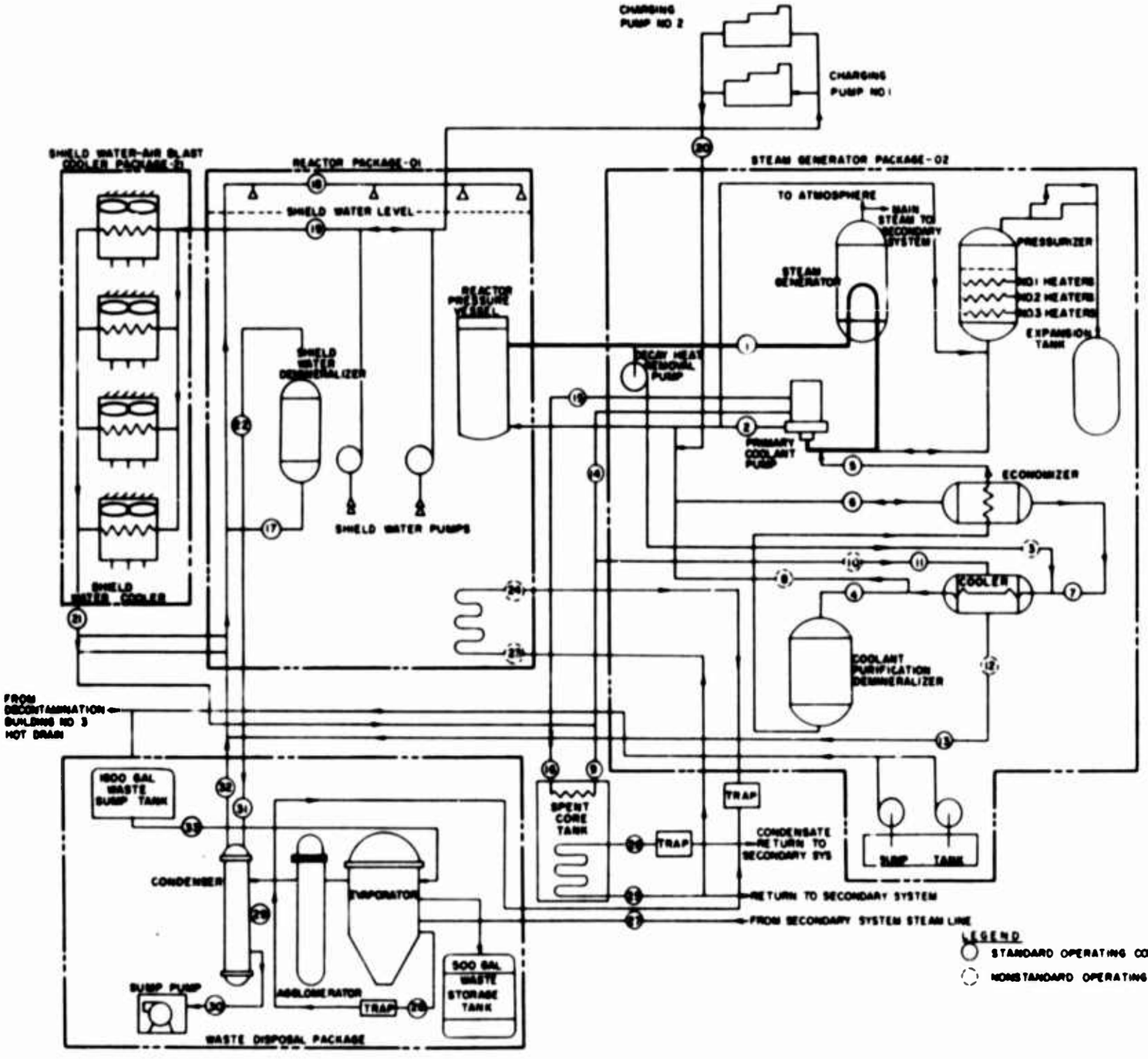

ITEM NO	FLOW (lb/hr)	PRESSURE (psia)	TEMPERATURE (°F)	ENTHALPY (Btu/lb)
1	870,788	1300	479.3	463.4
2	871,798	1300	446.7	426.9
3	9,790	ATMOSPHERIC	170	137.9
4	1,000	1300	120	87.9
5	1,000	1300	370.2	343.0
6	1,000	1300	446.7	426.9
7	1,000	1300	208.0	171.0
8	9,790	ATMOSPHERIC	140.2	108.1
9	7,410		105.9	73.8
10	13,830		105.9	73.8
11	13,830		105.9	73.8
12	13,830		126.8	94.7
13	13,830		126.8	79.8
14	4,830		106.9	73.8
15	4930		111.8	79.7
16	7,410		125.4	93.3
17	1,000		106.9	73.8
18	32,100	10.8	113.8	81.78
19	32,10[illegible]	53.8	125	92.9
20	456	1300	315	286.1
21	32,100		106.9	73.8
22	1,000		105.9	73.8
23	143	100	328	118.72
24	143	100	328	298.4
25	80	100	328	118.72
26	80	100	328	298.4
27	388	100	328	118.72
28	388	100	328	298.4
29	275	ATMOSPHERIC	260	117.4
30	275	ATMOSPHERIC	180	148
31	4,930		105	73.8
32	4,930		163.1	131.1
33	330	ATMOSPHERIC	80	48

Figure 17. PM-1 primary system flow diagram

plate and maintains the alignment of each fuel bundle relative to the control drive mechanisms. The upper skirt assembly orifices the primary flow between the core and the exit plenum chamber to minimize any irregular radial flow variation within the core proper. A portion of this flow is directed to the reactor vessel head for cooling. In addition, this assembly provides guide support for the control rods and the required hold-down force for the fuel bundles.

The coolant enters the reactor vessel through the inlet nozzle and flows into the inlet water box. It then passes down through the orifice distribution plate around the thermal shields to the core inlet. The coolant then passes up through the core, into the exit plenum chamber and out through the outlet nozzle.

For shipment or refueling, the fuel bundles and control rods are locked into place in the shroud by a removable fixture. The core is then shipped and handled as a complete unit. However, individual bundles can be replaced if desired.

The core shroud is fixed axially and radially at its upper end by the pressure vessel's inlet orifice plate and allowed to expand downward from this position. Dowel pins on the shroud fit into slots on the orifice plate to angularly align the shroud. These pins are located in a nonequiangular manner so that the shroud may be located in one position only.

The upper skirt assembly sits over a lip on the core shroud and is aligned to it by pins on the shroud. Four integral tabs at the top of the skirt radially locate its top within the throat of the pressure vessel. A double leaf spring, loaded against the pressure vessel head, supplies the hold-down force through the skirt and core shroud to the orifice plate. Thus, the skirt is free to expand thermally against this spring.

The core shroud, completely loaded with fuel bundles and control rods, is shipped to the reactor site as a single unit. A core handling fixture is used to positively lock both the bundles and control rods within the shroud. After the primary neutron source is inserted and locked into place in the center fuel bundle, the core-shroud assembly is lowered as a unit and seated in the pressure vessel. The locking fixture is then removed and the skirt

ssembly is set in place, completing the loading procedure. Core removal ›r refueling is accomplished in the reversed sequence except that the primary eutron source need not be removed. Subsequent loadings would not include ıis source, since "startup" neutrons would be supplied from a secondary ource (activated during the initial core life) located in the thermal shields. irect replacement of an individual fuel bundle or control rod, if required, ıay be easily accomplished after the upper skirt assembly is removed.

(3) Reactor coolant pump

The reactor coolant pump supplies the driving force necessary to ump the reactor coolant through the primary coolant loop. The pump is a ompletely sealed 1,800 rpm, 43 kw, canned rotor pump that delivers 2,125 pm against a head of 864 feet of water during normal operation. The pump s cooled by shield water and has thermocouples to measure upper and lower earing temperature and cooling water outlet temperature. These are provided › warn of impending pump failure. The primary coolant pump is located so ıat it can be removed from the coolant piping without requiring the reactor essel to be completely drained.

(4) Steam generator

The steam generator transfers heat from the reactor coolant to ıe secondary plant water to produce steam. At full power the steam genera- ›r produces 9.37 Mw of thermal heat in the form of 34,332 pounds per hour f 288.5 psig dry and saturated steam. The steam pressure increases as the ›ad decreases to a no-load value of 468.5 psig.

The steam generator is a vertical-shell, tube-type, heat exchanger ith an integral steam drum. The tubes, arranged in the form of an inverted , contain the high-pressure primary coolant. The shell contains the econdary steam water mixture. The steam generator envelope is a cylindri- al shell closed by two hemispherical heads. It has an outside diameter of 1 1/4 inches and is 17 feet long. The lower head contains two 6-inch ozzles (coolant inlet and outlet), four hand holes for maintenance, and is ivided into two chambers (coolant inlet and outlet water boxes) by a baffle. he heat transfer surface is composed of 1/2-inch inconel tubes which join ıe two coolant chambers. The tubes are rolled and welded into a flat tube

sheet which is inconel clad on the primary side. The shell and top head contain the stream separating equipment to remove moisture from the steam. It is penetrated by a 2 1/2-inch feedwater inlet nozzle, a 6-inch steam outlet nozzle, four 1/2-inch level indication and control fittings, a 1/2-inch phosphate connection, two 1/2-inch drains, a vent, and two blowdown fittings. The entire unit is made of carbon steel in all areas except those that come in contact with primary coolant, which are either inconel clad or are made of stainless steel.

(5) Pressurizer

The pressurizer is an 18-inch, inside diameter, type 316, stainless steel, right circular cylinder with hemispherical ends and a length of 89 inches. The vessel has a total volume of 14.53 cubic feet of which approximately 4.74 cubic feet is water during normal operation. There are 33 cartridge-type, 265-volt, 60-cycle, single-phase electric heaters located in the bottom portion of the vessel. The heaters are wired in three banks, each "wye" connected to a 480-volt, three-phase, 60-cycle system. The three banks are rated at 7.2 kw, 7.2 kw, and 12 kw for the first, second, and third banks, respectively. The circuit for the first bank of heaters includes an auto transformer with taps at every 20 volts from 320 to 480 volts to adjust the heater output to 1/2 kw less than the pressurizer heat losses. The spray line enters the top of the vessel with a spray nozzle on the end.

The pressurizer is installed in a vertical position and is connected to the primary coolant system by the surge line and the spray line. The surge line is connected from the bottom of the pressurizer to the suction side of the reactor coolant pump. The spray line is connected from the discharge of the reactor coolant pump to the top of the pressurizer. The surge and spray lines are connected by a bypass line.

The reactor coolant must (at all times) be maintained at a sufficient pressure to prevent bulk boiling in the reactor core. If bulk boiling were allowed in the reactor coolant, the heat transfer characteristics in the reactor core would be affected. The resulting high temperatures could damage the core.

The pressurizer system eliminates the problems mentioned.

Electric heaters, penetrating the lower portion of the pressurizer vessel, heat the water in the pressurizer to the saturation temperature of the primary coolant system pressure. The resulting steam is confined to the upper portion of the pressurizer. The "steam bubble" acts as a plenum which will maintain operating pressure during temperature changes of the primary system. When the reactor coolant temperature increases, the water expands and the water level in the pressurizer increases. Similarly, when the reactor coolant temperature decreases, the water contracts and the pressurizer level decreases.

The pressurizer maintains the pressure by use of a spray and electric heaters. If the pressure increases, a valve in the spray line opens and sprays relatively cooler water (448°F to 463°F) into the steam zone of the pressurizer. The pressurizer temperature is approximately 579°F, and this spray water condenses the steam, thereby decreasing the pressure. When the pressure decreases, electric heaters are energized to add heat which causes a pressure increase.

(6) Reactor coolant piping

The reactor coolant piping is a seamless, 6-inch schedule 80 piping made of type 316 stainless steel. Four flange joints are provided in the piping, two for installation or dismantling of the two packages containing the main coolant loop, and two for removal or installation of the steam generator.

b. Secondary system

The secondary system consists of the steam generator, turbine generator set, main condenser, condensate pumps, feedwater pumps, feedwater heater, deaerator, and steam jet air ejector. At full load, 34,332 lb/hr of 290 psig dry and saturated steam is produced by the steam generator. The main turbine receives 25,726 lb/hr of this flow, while the remainder is consumed by auxiliary systems. The turbine exhaust steam flow enters the air cooled condensers (4) and gravity drains into the condenser hotwell. The condensate is then pumped by the condensate pumps through the air ejector condenser into the deaerator, mixing with steam from the evaporator. It is then picked up by the feedwater pumps, pumped through the feedwater heater

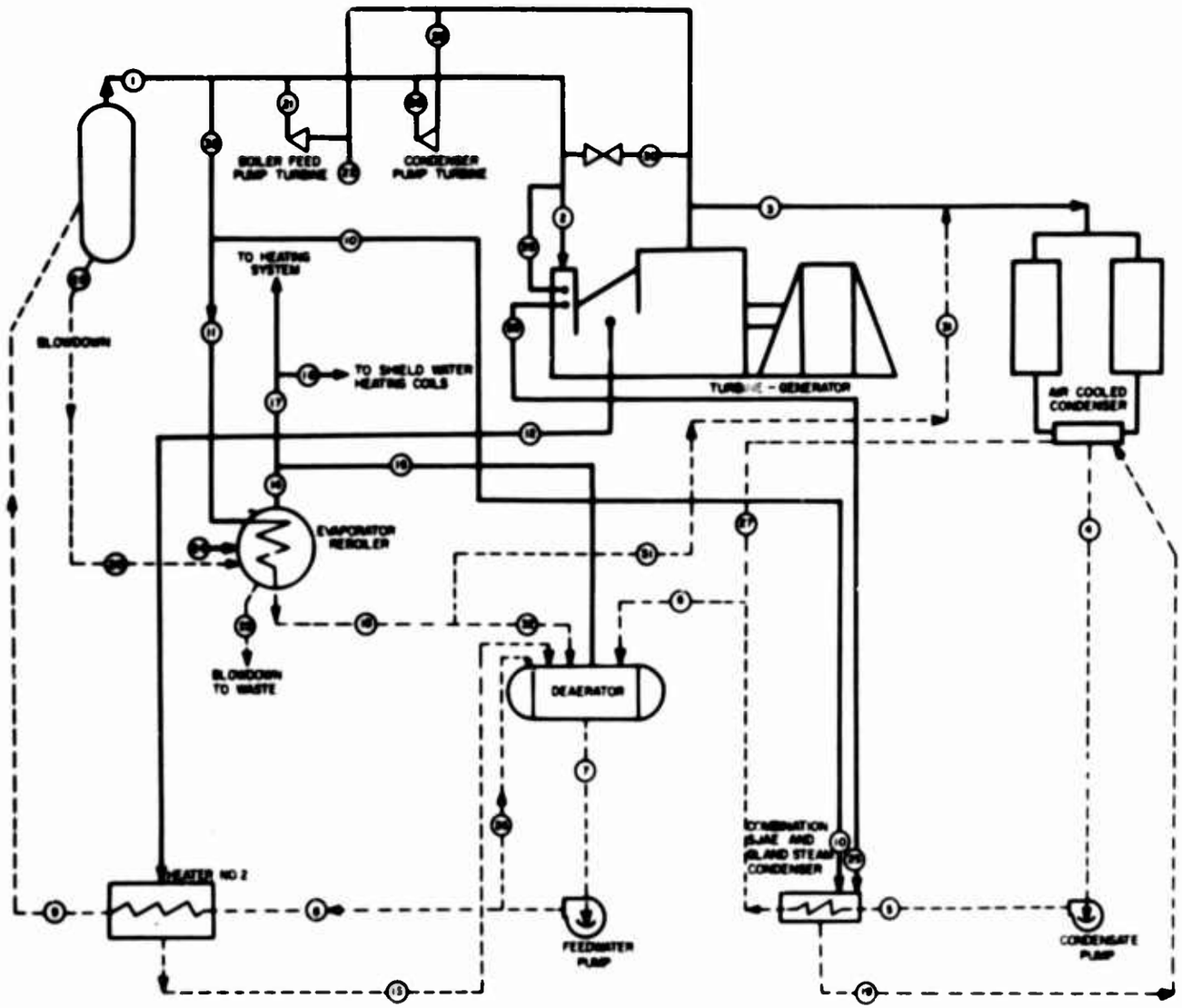

ITEM NO.	DESCRIPTION	4250 KW GROSS			
		BACK PRESSURE 9.4 HG ABSOLUTE			
		(lb/hr)	(psia)	(°F)	(Btu/lb)
1	STEAM GEN OUTPUT	34,332	300.0	417.3	1,202.8
2	TURBINE THROT STEAM	25,726	290.0		1,202.8
3	EXT STEAM TO COND	22,756	9.4 HG ABS		1,008.9
4	CNDS LEAVING COND	26,320	9.4 HG ABS	157.1	125.0
5	CNDS ENTERING SJAE	26,320		157.1	125.0
6	CNDS ENTERING DEAERATOR	24,820		186.8	154.7
7	FDW LEAVING DEAERATOR	37,002	22.7	234.8	203.1
8	FDW ENTERING HTR 2	34,332		236.1	204.4
9	FDW ENTERING ST GEN	34,332		309.0	278.9
10	STEAM TO SJAE	275	1.2		1,202.8
11	STEAM TO EVAPORATOR	7,050	1.2		1,202.8
12	EXTRACTION ST TO HTR 2	2,970	86.6		1,150.2
13	HTR 2 DR TO DEAERATOR	2,970		340.0	284.1
14	EVAP ST OUTPUT	7,200	35.0	298.3	1,167.1
15	EVAP ST TO DEAERATOR	200	35.0	298.3	1,167.1
16	EVAP ST TO SHLD COILS	NORMALLY NOT IN SERVICE			
17	EVAP STEAM EXPORT	7,000	35.0	298.3	1,167.1
18	EVAP COIL DRAINS	7,890	80.0	320.3	290.6
19	SJAE DRAINS	774	1.96	200.1	168.1
20	STEAM GEN BLOWDOWN	200	300.0	417.3	399.8
21	ST TO FDW PUMP TURB	NORMALLY NOT IN SERVICE			
22	FDW PUMP TURB EXH	NORMALLY NOT IN SERVICE			
23	EVAPORATOR BLOWDOWN	184	35.0	298.3	227.9
24	MAKEUP TO EVAPORATOR	7,184		200	168.0
25	GLAND SEAL STEAM	44			1,202.8
26	FDW PUMP RECIRCULATOR	2,470		236.1	204.4
27	CNDS PUMP RECIRCULATOR	1,500		186.8	154.7
28	ST TO CNDS PUMP TURB	NORMALLY NOT IN SERVICE			
29	CNDS PUMP TURB EXHAUST	NORMALLY NOT IN SERVICE			
30	TURBINE BYPASS	NORMALLY NOT IN SERVICE			
31	EVAP DR TO CONDENSER	1,308		320.3	290.6
32	EVAP DR TO DEAERATOR	6,542		320.3	290.6
33	AUXILIARY STEAM	8,125	300	417.3	1,202.8

Figure 18. PM-1 secondary system flow diagram

and into the steam generator at a temperature of 293°F.

(1) Steam generator

See primary system section for description.

(2) Turbine - generator set

The main turbine and generator unit consists of a horizontal multi-stage condensing-type turbine, reduction gearing, and a three-phase generator mounted on a common bed plate. The governing equipment, except the control switches for remote operation, is mounted on the turbine.

The turbine is a five-stage unit. It has one Curtis stage and four Rateau (single-impulse) stages. An extraction point from the Number 1 stage bleeds steam to the feedwater heater. The steam at the valve chest at full load is 300 psia, 414°F, with a flow of 25,726 pounds per hour. Steam pressure at the extraction point is 86.6 psia and flow is 2,970 pounds per hour at full load. The turbine exhaust is at 9-inches Hg abs, with approximately 12 percent moisture. The turbine speed is 8,050 rpm.

The 1,200-rpm, 6-pole, gear-driven generator is a salient-pole-type machine and has a nominal rating of 4,160 volts, three-phase, 60 cycle, 1,250 kw at 0.8 power factor. It is of special design and uses a static exciter to maintain the output voltage within the required ± 2 percent during a 300-kw step change in load. During steady state conditions the voltage is held to within ±0.5 percent of nominal value and frequency is maintained within 1/4 percent. The unit is of open type construction and is self-cooled to minimize weight.

(3) Main condenser

The main condenser is made up of four rectangular units, each approximately 8 feet by 8 feet by 15 feet long. For shipping, the four units are assembled in two packages, two units per package. The units each have a heat transfer surface of approximately 15,000 square feet.

Each of the four condenser units consists of two main banks of horizontal finned U-tubes, one on each side of the unit. The steam enters the inlet steam chamber and flows through the finned tubes where it is cooled

and condensed by air flowing across the outside of the tubes. Steam condensate and noncondensable gases then flow from the main bank discharge chambers to the air cooler section. Steam and noncondensable gases are drawn through the vertical air cooler tubes where steam is condensed and the noncondensable gases are cooled. The condensate flows from the air cooler heater to the hotwell. Steam and noncondensable gases flow from the discharge side of the air cooler section to the air ejector.

Each of the air coolers has two decay heat steam connections which allow the coolers to be used to condense steam generated by reactor decay heat. The decay heat steam flows from the desuperheater through the decay heat steam line to the air coolers.

The cooling air flow from the condenser is provided by four single-speed and four two-speed motor-driven fans. One of each type is provided for each condenser unit. These fans and their butterfly discharge valves are mounted on the top of the condenser units. The air flow across the main bank U-tubes is controlled by six sets of louvers (three on each side) for each condenser unit. The air flow across the air cooler unit is controlled by one set of louvers which is located at the steam chest end of the condenser unit. The top, bottom, and other end of the unit are enclosed. A fuel oil storage tank (1,095 gallons capacity), is located under each condenser unit. The four single-speed fans are driven by the 20-hp, 480-volt, 60-cps, three-phase, 1,200-rpm, totally enclosed, fan-cooled, squirrel-cage induction motors. The four two-speed fan motors are the same except that they may be run at 1,200 or 600 rpm. Each fan is 48 inches in diameter and is equipped with a 4-foot fan discharge diffuser stack that houses the air discharge valve, and a fan discharge swirl vane.

(4) Condensate pump

There are two identical centrifugal condensate pumps; one is motor-driven and the other steam-turbine driven. Normally the turbine-driven pump will be operated and the motor-driven pump used as a standby. The pumps are horizontal single-stage, with vertically split casing and single-suction impeller. The design rating of each pump is 54 gpm at 180 feet of dynamic head.

The motor-driven pump is driven by a 10-hp, 480-volt, 60-cps, three-phase, drip-proof, enclosure-type motor. The turbine-driven pump is powered by a single-stage steam turbine which is equipped with a constant speed governor and an overspeed trip. The condensate pumps are located under the condenser hotwell in the heat transfer apprartus package. The condensate pumps are vented to the condenser hotwell.

(5) Steam jet air ejector (SJAE)

The air ejector draws steam and noncondensable gases from the main condenser. The air ejector unit is a two-stage type with a twin element unit on the first stage, and a single element unit on the second stage. On the first stage one element operates and the other acts as a standby unit. Included, as an integral part of the air ejector, is a shell and tube heat exchanger with condensate flowing through the tube side. This heat exchanger is divided into two parts on the shell side, one serving as the first stage condenser, the other as the second stage condenser. The air ejector condenser is vented to atmosphere. Drains from both sections of the shell side of the heat exchanger are returned to the hotwell. The first-stage air ejector nozzles require a steam flow (90 psig) of 465 lbs/hr while the second stage nozzle requires a flow of 130 lbs/hr. The entire component is located in the heat transfer apparatus package under the feedwater heater. The return steam from the turbine gland steam system flows into the first-stage air ejector condenser also.

(6) Deaerators

The deaerator heats and removes dissolved gases (primarily oxygen) from the secondary condensate as well as acting as a surge tank for The condensate and feedwater systems. The deaerator has a normal operating storage capacity of approximately 400 gallons. The unit is a horizontal steel cylinder approximately 1/4 inch thick, 4 feet in diameter, and 7 1/2 feet long. the deaerator design pressure is 30 psi. The normal operating pressure is 11 psig. The oxygen content of the water leaving the deaerator will not exceed 0.005 cc per liter. The unit is installed approximately in the center of the heat transfer apparatus package with its centerline 5 feet above the package floor. The deaerator is equipped with a relief valve which will open if the

deaerator pressure exceeds 15 psig. It is also equipped with a vacuum breaker that opens to prevent a vacuum from being formed in the deaerator. The deaerator is continuously vented to the atmosphere.

(7) Feedwater pump

There are two identical centrifugal feedwater pumps, one is motor driven and the other steam-turbine driven. Normally the turbine-driven pump will be operated and the motor-driven pump will be used as a standby. The pumps are vertical, six-stage, centrifugal types with single suction impellers. The rating of each pump at operating temperature is 88 gpm at a head of 910 feet.

The motor-driven pump is driven by a 50-horsepower, 3,600 rpm, 480-volt, 60-cps, three-phase, drip-proof enclosure motor. The turbine-driven pump is driven by a single-stage steam turbine. The steam turbine has an overspeed trip and a constant speed governor.

There are relief valves installed in the feedwater pump suction lines. They will prevent excessive back pressures in the low-pressure piping because of failure of feedwater pump check valves.

Both pumps are installed in the heat transfer apparatus package adjacent to the deaerator.

(8) Feedwater heater

The feedwater heater is a six-pass horizontal shell and U-tube heat exchanger with stationary shell and removable tube bundle. Feedwater flows through the tubes and steam extracted from the turbine is condensed on the outside of the tubes and inside the shell. The heater is approximately 6 feet long by 2 feet in diameter. There are 276 (138 U's) 5/8-inch outside-diameter Admiralty metal tubes. The shell design pressure is 150 psig and the tube design pressure is 600 psig. Feedwater enters the coolers at 224°F and leaves at 311°F. There are relief valves installed on both the shell and tube sides of the heater. The unit is installed in the heat transfer apparatus package directly over the air ejector with its centerline approximately 5 feet above the package floor.

c. Electrical system

(1) Main station transformer and distribution system

The main distribution system receives power from the main turbine generator. This power is transmitted from the generator through a three-conductor cable to main generator breaker in the 5-kv switchgear cubicles. This circuit breaker is connected to the 4,160-volt main distribution bus. The site tieline circuit breaker and the main station transformer primary circuit breaker are also connected to the 4,160-volt main distribution bus.

The main station transformer is located in cubicle 2 of the switchgear housing. The secondary of the main station transformer is connected through an air circuit breaker to a 480-volt bus. This bus is connected directly to the motor control center (MCC) main bus through a three-conductor cable. The emergency diesel generator is connected to the 480-volt bus through an air circuit breaker.

The instrumentation and control equipment for the main generator and the main distribution system is mounted in the 5-kv switchgear housing. The instrumentation and control equipment for the main station transformer secondary circuit breaker and the diesel generator circuit breaker is located in the 480-volt bus cubicle. Indicating instruments and control switches for this equipment are located on the control console.

The power for the various station auxiliaries, the vital AC and DC systems, and the plant lighting system is supplied through circuit breakers mounted in the motor control center.

Motor starters and heater contactors for the station auxiliaries are also mounted in the motor control center. Manual control switches, indicating lamps, and annunciator alarms for the auxiliary motors and heaters are located on the control console. Instrument signals are transmitted to the motor controllers from contacts in console mounted switches, or instruments, or local transmitters mounted at the auxiliary equipment. A small number of auxiliaries are equipped with local controls and starters which are powered from manual circuit breakers located in the motor console center.

(a) Switchgear enclosure

The switchgear enclosure is an eight-cubicle, indoor-type, metal-clad, rigid and freestanding framework. Six of the cubicles are for the 4,160-volt equipment, one cubicle houses the main station transformer, and one cubicle houses the 480-volt equipment. The complete unit is approximately 17 feet 2 inches long and 7 feet 6 inches high. The 480-volt and transformer sections are 4 feet deep and the 4,160-volt sections are 5 feet 4 inches deep. An aluminum cable tray 19 inches wide by 6 3/8 inches deep is mounted along the top rear of the 4,160-volt sections.

Automatic shutters are provided in the 4,160-volt breaker and potential transformer compartments to prevent accidental contact with the high voltage. The relays, watthour meters, and indicating lamps are mounted on the hinged front panels. Current transformers and drawout-type potential transformers are mounted within the cubicles. The static excitation and voltage regulation equipment for the main generator are mounted in cubicle 8. Space heaters are provided in the cubicles to prevent condensation within the equipment.

(b) Switchgear wiring and bus work

Wiring within the switchgear cubicles is a special silicone rubber insulated type and is brought out to terminal blocks. The bus work within the cubicles is fabricated from copper bar and silver plated over the contact areas after fabrication. The 4,160-volt main bus is mounted across the bottom rear of cubicles 3 to 6. An insulated copper ground bus is mounted in the top rear of these cubicles.

(c) Main station transformer

The main station transformer is an indoor, dry-type, self-cooled unit and is rated 500 kva, 4160-277/480 volts grounded neutral, three-phase, 60-cycle. The high-voltage (primary) windings are connected delta and the low-voltage (secondary) windings are wye connected with a neutral ground. A four-position, no-load, tap changer is provided in the primary winding for voltage adjustment. The unit is capable of carrying rated load continuously without exceeding an average copper temperature rise of 150°C

at 6,500 feet elevation. Three lightning arresters are connected to the primary of the transformer for protection against voltage surges.

(d) Switchgear circuit breakers

The 4,160-volt magnetic air circuit breakers are of the three-pole, electrically operated, drawout type. They are equipped with mechanically and electrically trip-free closing mechanisms, shunt trip coils, auxiliary switches, operation counters, and mechanical position indicators. They have a switch, operation counters, and mechanical position indicators. They have a rating of 1,200 amperes at 4.16 kv with a three-phase interrupting rating of 75 Mva. Their control voltage is 125 volts DC which is supplied from the plant DC system. The 480-volt magnetic air circuit breakers are of the three-pole, electrically operated, drawout type. They are equipped with mehcanically and electrically trip-free solenoid closing mechanisms, shunt trip coils, and dual selective series overcurrent tripping devices. Their rating is 600 amperes at 600 volts AC with an interrupting rating of 35,000 RMS amperes at 480 volts. Their control voltage is 125 volts DC which is supplied from the plant DC system.

(e) Motor control center enclosure

The motor control center consists of six metal-clad sections mounted on a common base to form a rigid, freestanding, self-supporting structure. The sections are approximately 20 inches square and 90 inches high permitting the mounting of eight NEMA size 1 starters front and rear. Each section is composed of modular units which contain the circuit breakers, starters, transformers, indicating lamps, and relays necessary for operating and protecting the auxiliary equipment. Sufficient space heaters are provided to prevent condensation within the equipment. The enclosure is semi-dust-proof with gasketed doors.

(f) Wiring and bus work

Wiring within the motor control center is NEMA Class II, type B, and is brought out to terminal boards located in the bottom wiring duct. The bus with the cubicle is fabricated from high-strength aluminum, and silver plated over the contact areas after fabrication. The main MCC bus

which has a 600-ampere capacity traverses the top rear of the enclosure. Vertical taps in each section distribute the power to the individual circuit breakers. The bus bars are of rectangular cross sections and are supported by insulated bus supports. The bus is braced for fault currents of 15,000 amperes RMS. A ground bus also traverses the bottom of the MCC with provisions for connection to the external station ground.

(g) MCC circuit breakers

The circuit breakers are of the air-break, molded-case type, manually operated and trip-free from the handle. They have dual protection with thermal inverse time trip on overload and instantaneous magnetic trip on short circuit. All circuit breakers have an interrupting rating of 15,000 amperes RMS at rate voltage. The circuit breakers are so constructed that the operating handles may be locked in the OFF position by means of as many as three padlocks. The breakers are also mechanically interlocked with the doors to the cubicles so that the doors may not be opened unless the breaker is in the OFF position. This interlock may be bypassed by a release mechanism to permit emergency access to the unit. The operating handles have a mechanical device that gives a positive indication as to whether the breaker is in the ON, the OFF, or the TRIPPED position.

(h) Starters

Starters used in the motor control are NEMA rated, magnetic type with manual reset thermal overload protection. These resets are accessible without opening the cubicle doors. Each starter has a normally open auxiliary contact for seal-in and under-voltage protection. Other auxiliary contacts are provided when needed for proper control of the circuit. The starter coils are rated at 110 volts, single phase, 60 cycle, and are supplied from individual control power transformers which are mounted in the MCC. The starters are used in combination with circuit breakers described above to form combination starters.

(i) Lighting transformer and panel

One transformer rated at 480-120/208 volts, 30 kva, three phase, is mounted in the MCC to provide a source of power for the plant

lighting system. The lighting distribution panel is also mounted in the MCC.

(2) Vital AC and DC systems

A 125-volt battery furnishes power to the DC system. The battery is normally kept charged by the main static battery charger. An auxiliary static battery charger is furnished to charge the battery when the main charger is out of service. The battery charges also normally supply the DC load. Except for the vital AC system motor generator set, the battery load is supplied through a DC distribution panel. Switches are provided for isolating the battery and the motor from the remainder of the DC system. The 120-volt AC system normally receives its power from a DC-driven motor generator set which is located in the DC cabinet. The AC system may also receive power from the vital AC standby breaker in the motor control center. This breaker also supplies power to the main battery charger. A 480-208/120 volt transformer, located in the DC cabinet, steps the voltage down to supply the vital distribution panel.

The vital AC system may be operated in either the parallel or isolated mode. In the parallel mode (normal operation) the generator will supply 98 percent of the power required and the standby supply will provide 2 percent. If either supply is lost, the remaining supply will assume the total load automatically. In the isolated mode, the motor-generator set will supply the total load.

(a) Battery

The battery consists of sixty 2-volt (nominal) cells connected in series, and are rated at 160 ampere-hours on an 8-hour discharge rate. It is mounted on a two-tier rack which is approximately 12 feet long. The cells are of the pasted plate type sealed in clear plastic containers. The cell terminal posts (lead alloy-coated copper) are equipped with acid resisting connector bolts and nuts. The intercell and intertier connectors are lead-plated copper. Cell numbers are provided for identification. An ammeter on the DC cabinet enclosure gives a local indication of battery current. A separate series shunt is provided for remote indication of current on the control console. Also a knife switch is provided to isolate the battery for maintenance purposes, and 100-ampere fuses protect the battery from

overload and short circuit currents. A hood with a vent fan is mounted over the battery rack to vent any gases that might accumulate.

(b) DC distribution panel

The DC distribution panel is rated at 125 volts (two wire), with one 100-ampere main breaker, one 30-ampere and ten 20-ampere branch circuit breakers. A locally mounted ammeter indicates distribution panel current and a separate shunt is provided for indication of this current on the control console. Bus voltage is also indicated on the control console.

(c) Main static battery charger

The main static charger is rated at 125 volts and has charging characteristics to match the battery. Input to the charger is 480 volts, three-phase, 60 cycles from the main vital AC supply. The charger uses only static devices including transistors, dry-type rectifiers, and magnetic amplifiers. It uses a magnetic amplifier with feedback to regulate the flow of current to the battery. The output of the amplifier is rectified using diode power rectifiers. Output voltage and current are indicated by meters located on the DC cabinet.

(d) Auxiliary static battery charger

This charger is identical to the main static battery charger but it receives its power from a separate circuit breaker in the motor control center. Control switches mounted on the DC cabinet and the control console may be used to connect either the main or the auxiliary static battery charger to the battery.

(e) Motor generator

The motor is rated at 3 hp, 105-140 volts DC, 26.6 - 20 amps. It is a four-pole, shunt-wound machine and is directly coupled to the generator. The generator is rated 2 kva, 1.6 kw, 120/208 volts, three phase, 60 cycles at 1,800 rpm. Motor current and generator current are indicated by meters located on the DC cabinet.

(f) Vital AC distribution panel

This distribution panel is located in the DC cabinet. It is

rated 120/208 volts, three phase, four wire. It is equipped with a 100-ampere main circuit breaker and twelve 20-ampere, single-phase branch circuit breakers. It receives its power from either the motor generator set or from the motor control center. The distribution bus voltage is indicated by means of a voltmeter located on the control console.

(g) Vital AC supply transformer

The supply transformer is rated 3 kva, 480-208/120 volts, three phase. It is dry-type transformer and is used to step down the auxiliary distribution system foltage to the vital AC system voltage. The transformer is located in the DC cabinet.

(h) Voltage regulator

The voltage regulator for the AC generator consists of a detector circuit, a transistor amplifier, and a magnetic amplifier. The voltage detector measures the output of the AC generator and feeds a signal to the transistor amplifier which amplifies the signal. The output of the transistor amplifier is fed into the magnetic amplifier which automatically varies the current in the field of the AC generator to restore the output of the generator to a predetermined value.

(i) Speed regulator

The speed regulator consists of a frequency detector bridge circuit (tuned LC network), a transistor amplifier, and a magnetic amplifier. The frequency detector bridge measures the frequency of the generator output and feeds a signal to the transistor amplifier which amplifies the signal. The output of the transistor amplifier is fed into the magnetic amplifier which automatically varies the field of the DC motor to restore the frequency of the AC generator to a predetermined value.

(3) Emergency power system

A diesel generator set is provided to furnish power to the station service system during startup and shutdown of the plant when site power is not available. The diesel may be started locally, or remotely from the control console. The generator, however, can be synchronized with the electrical system only from the control console. The rating of the generator at 6,500

feet is 150 kw, 0.8 power factor, 480 volts, 60 cycles, three phase at 1,800 rpm. It feeds power into the electrical system through an air circuit breaker in the main station transformer and distribution system switchgear. The diesel fuel supply tanks are located beneath the main condensers. These four tanks also supply fuel to the auxiliary boilers.

The diesel generator is mounted on a common bed plate together with all its accessories. The diesel is a turbo charged, vertical in-line, six cylinder, four cycle, overhead valve, open combustion chamber, direct injection engine. The generator is a self-excited, brushless, synchronous-type unit directly connected to the diesel.

d. Nuclear instrumentation system

This system is a completely solid-state modular system which is designed for minimum maintenance and maximum reliability. It is composed of three sets of neutron detectors and allied equipment. The sets are (1) two source range channels, (2) two intermediate range channels, and (3) three power range channels. The system monitors reactor power over approximately ten decades (factors of tens) in three overlapping ranges with a minimum of two decades overlap between successive ranges. The bistable outputs in the system are continuously tested for proper operation, and a special fault-monitoring system is provided to locate a faulty module (plug-in component).

The nuclear instrumentation system performs the following general functions:

(1) Provides neutron flux level information from source level to at least 150 percent power.

(2) Provides reactor period information from source level through full power.

(3) Provides annunciator and/or scram signals for positive periods below preset limits, power levels above preset limits, discrepancies between safety system power supplies, and discrepancies between channels of the same range.

(4) Provides annunciator and/or rod hold (stop withdrawal) signals for a low startup flux or short periods.

(5) Provides a means of testing the system bistables for proper operation.

(6) Provides a fault location system to aid the operator in determining the location of a failed module.

(7) Provides a test and calibration signal for each channel.

The system is housed entirely within a cabinet in the control room except the neutron detectors (located within the shield water tank), the source range preamplifiers (located just outside the shield tank), and the interconnection cable.

This system uses conventional solid state nuclear instrumentation throughout. The detectors are located in the shield water tank outside the reactor lead shielding in a full power flux level corresponding to approximately 5×10^9 to 8×10^9 nv. The source range BF_3 detectors are located in a pig with a 3-inch lead wall which is movable over the range of 15 to 19 inches from the outside wall of the pressure vessel. This movement is accomplished by lifting the pig using the auxiliary crane and sliding it along its support rail using the "all purpose tool." The other chambers can be moved in 3/8-inch increments using the appropriate lifting tool. The intermediate range chambers can be positioned over the range of 15 to 19 inches from the pressure vessel wall. The power range chambers are movable over the range of 15 to 21 inches from the wall. Approximately 5 inches of lead shielding is provided for the source, intermediate, and power detectors to ensure a sufficiently low (10^4 r/hr) gamma dose rate at the detector location. The detectors are capable of satisfactory operation in an 80°C (176°F ambient temperature without auxiliary cooling. All detectors are placed in waterproof cans (the can and cable are capable of operating completely submerged under 25 feet of water). A preamplifier, located above the shield water tank, is provided for the startup channels. This guards against possible noise problems associated with operating the plant near the Air Force radar station. The startup channels will function satisfactorily without the preamplifier, however, if there is a preamp malfunction. The intermediate and power range channel detector cables are connected directly to their respective signal and high voltage cables in the primary system building.

The reactor safety system scram and logic circuits and pulse or current monitoring circuits, required to process the outputs of the detectors, are housed in the reactor instrumentation cabinets located in the control room. This equipment operates satisfactorily in ambient temperatures of 32 to 110°F and humidities up to 95 percent. Each channel measurement is compared to a corresponding channel measurement. When a discrepancy exists, a light is energized and a discrepancy annunciator sounds on the control console. Each channel has a built-in test and calibration circuit which provides a means of testing and calibrating the selected channel. The test system is interlocked in such a manner that the operator cannot scram the plant by any arrangement of test inputs during power operation.

(1) Source range (startup) channels

The startup channels consist of two BF_3 proportional counters and allied electronic equipment. These channels rely on the processing of individual pulses resulting from the (n, α) reaction of a neutron with the B_{10} atoms in the gas. The sensitivity of the detectors is such that the detector channel will have a count rate of at least 2 cps from the subcritical mulitplication of the neutron source, which is located in the center of the core.

Each detector's pulse may be transmitted either through the preamplifier or to the linear amplifier in the event of preamp malfunction. The preamplifier functions to match the impedance of the detector to that of the cable, and transmits the pulse through the cable to the linear amplifier, with maximum efficiency and minimum attenuation under adverse electrostatic or electromagnetic fields. The linear amplifier is composed of a high-gain, low-noise, pulse amplifier discriminator and scale of two. This amplifier takes the pulses from the detector and converts them to constant amplitude and width pulses. The discrimination limits the linear amplifier's output to pulses resulting from neutrons and biases out those due to noise, gamma rays, or extraneous pulses. These constant-amplitude, constant-width pulses are then processed by the log count rate circuit through a series of "pump-integrators" (log integrators A and B) which convert the pulses to a signal proportional to the log of the pulse rate. An amplifier takes this signal and amplifies it for use by the period amplifier. The period, or derivative

amplifier is an integral differential device which effectively differentiates the output of the count rate amplifier and provides a signal proportional to the inverse reactor period. The integral portion of the amplifier is a noise limiting type which lends to the stability of the circuit. A modulator and a demodulator are used to eliminate the effect of circuit drift and changes in circuit parameters.

The outputs of channels 1 and 2 log count rate amplifiers are compared and if a discrepancy greater than a preset amount exists, an amber light on the source range drawer goes on and a signal is sent to the CHANNEL DISCREP. annunciator (on the control console). These signals are also auctioneered (i.e., the highest value is passed), to provide a signal to the low count rate rod hold bistable.

The selected output of the count rate amplifiers may be recorded on one pen of the Log Count Rate - Log N recorder. The count rate is recorded from 1 to 10^6 cps; this corresponds to only six decades on the seven decade log N recorder. The actual recording for the count rate at 1 cps will correspond to 10^4 nv on the chart and a 10^6 cps to 10^{10} nv. An auxiliary amplifier is used to convert the output of the log CR amplifier to the required 10 to 50 milliamp signal for recording.

The outputs of channels 1 and 2 period measurement are compared. An amber light goes on and an annunciator signal is provided on a discrepancy beyond a preset value.

A period auctioneer is used to provide a signal to the short period channel 1 and 2 rod hold bistable, which provides signal to the safety system.

A four-position selector switch (two for source range and two for intermediate range) is provided to allow for recording the the selected reactor period. One auxiliary amplifier is provided to furnish the required 10 to 50 milliamp signal for the recorder.

A summary of the source range function is as follows:

(a) Provide an indication of log count rate (1.0 to 10^6 cps) and period (-30 to +3 sec.) on meters located on the nuclear instrumentation

panels in the control console. The indications from the appropriate channel can be recorded on the log count rate or period recorders through two selector switches.

(b) Provide output information to the reactor safety system to scram the reactor when both channels indicate a positive period less than a preset value in the range of + 100 to + 3 seconds (normally 15 seconds).

(c) Provide output information to the rod withdrawal interlock system to prevent rod withdrawal when either of the channels indicates a positive period less than a preset value between + 100 to + 3 seconds (normally 15 seconds).

(d) Provide output information to the rod withdrawal interlock system to prevent rod withdrawal when both channels indicate a count rate less than a preset value between 3 counts/sec. and 10^2 counts/sec. (normally 5 counts/sec.).

(2) Intermediate range channels

The intermediate flux measurement equipment consists of dual channels. Each channel contains a compensated ionization chamber allied current processing, indicating, and recording equipment. Compensation is necessary to reduce the gamma current background, thus increasing the effective measuring range of the chamber. Prior to reactor operation, the compensating voltage will be set at the manufacturer's recommended setting, and readjusted, if necessary, whenever the reactor is shut down after a power run. The log N amplifier (composed of a modulator, log amplifier, and demodulator) converts the detector's current output to a signal proportional to the log of the detector output signal. The meter indicates the level from 10^3 to 2.5×10^{10} nv. The output of the log N amplifier is differentiated by the period amplifier, which is similar to those used in the source range channels, and provides an output signal proportional to the inverse reactor period.

A comparator is provided for both the log N (power) and period measurements which lights an amber discrepancy light and provides a signal for annunciation when a preset discrepancy is exceeded.

The selected log N (power) and the period measurements can be recorded on the log count rate--log N power recorder--and the period recorder respectively. A separate auxiliary amplifier is provided for the log N circuit to furnish the required signal for recording, while the period recording uses the common amplifier switch and recorder for both the source and intermediate channels.

Two interlock bistables are provided for the source range circuits: (a) a bistable operating from channel 3 bypasses the source range period scram signal; and (b) a bistable from channel 4 disables the high voltage for the source channels and disables the short period and low count rate signal for rod hold.

A period scram bistable is provided for each channel to furnish a signal to the safety system when the period reaches a preset limit.

A period auctioneer is used to provide a signal to the short period channels 3 and 4 rod hold bistable, which provides a signal to the safety system.

The high voltage modules provide the required voltage for both the high positive voltage (for the detector) and the negative compensating voltage as required.

A summary of the intermediate range nuclear instrumentation function is as follows:

(a) Provide an indication of log N (10^3 to 2.5×10^{10} nv) and period (-30 to ∞ to + 3 sec.) information on panel mounted meters on the control console. Means are provided for recording either log N channel or period channel output on strip chart recorders. The log N recording utilizes the second pen of the source range channel log count rate recorder, and either intermediate channel can be recorded through a selector switch. The period is recorded on the single pen period recorder. The period output of either period channel can be recorded through a selector switch.

(b) Provide output information to the safety system to scram the reactor when either channel indicates a positive period less than a preset value between + 100 and + 3 seconds (normally set at + 15 seconds).

(c) Provide output information to the rod withdrawal interlock system to prevent rod withdrawal when either channel indicates a positive period less than a preset value between + 100 and + 3 seconds (normally + 30 seconds).

(d) Provide a means of removing source range detector high voltage and removing the source range rod hold functions when the indicated flux level exceeds a preset limit (normally 10^5 nv). Also provide a means of disabling the source range scram function when the indicated flux level exceeds a preset limit (normally 10^4 nv).

(3) Power range channels

The three linear power channels use uncompensated ionization chambers since the expected neutron current should be several decades above the gamma current. Three channels are used to provide a two-of-three scram signal to the safety system. The output signals of the chambers are amplified by the linear DC power amplifier and used for indication and control. The output of each linear amplifier is displayed on a local meter and the selected channel can be recorded through a selector switch and auxiliary amplifier in the power range recorder. Each power channel is compared with the other power channels and an amber discrepancy light will go on, providing a signal for annunciation when a preset discrepancy is exceeded.

A power level auctioneer is provided to furnish the highest signal from channel 5, 6, or 7 to the HI POWER annunciator bistable and to the intermediate range period scram bypass circuit.

The high voltage supply provides the required voltage for the detector operation.

A summary of the power range functions is as follows:

(a) Each channel provides an indication of reactor power (0 to 150 percent) by means of panel-mounted meters over the selected range of flux from 2.5×10^7 to 2.5×10^{10} nv. All channels have an adjustable gain so that the 0 to 150 percent scale can correspond to any two + decades flux range. The power indication from any one of the channels can be recorded through a selector switch.

(b) Provide output information to the safety system to scram the reactor when the indicated flux level reaches a preset level between 100 and 150 percent (normally 120 percent full power). The output of each channel is fed to a 2-out-of-3 coincidence circuit in the safety system which prevents a reactor scram on spurious noise signals and provides greater operational reliability.

(c) Provide a means of inactivating the intermediate range channel scram and rod hold functions when the power reaches a preset value between 2 and 100 percent power (usually 10 percent of full power).

(d) Provide a high power annunciation on a power level signal from any channel above a preset value between 3 and 150 percent full power (usually 110 percent of full power).

2. PM-2A NUCLEAR POWER PLANT

The PM-2A was the first portable nuclear power plant to be installed in the world. The plant is a 1,560 kw(e) pressurized water power reactor designed for arctic conditions and is located in the ice tunnels at Camp Century, Greenland, 150 trail miles east of Thule Air Force Base.

The PM-2A, based on the design of the SM-1, was built by Alco Products, Inc., under contract with the US Army Corps of Engineers. It went critical on 2 October 1960 and was accepted by the Army on 8 March 1961 after completion of a 400-hour test.

This plant is the first of a kind in many ways, with its modular construction, providing separate skids for transportation of the vapor containers (2), air blast coolers (4), heat exchangers, electrical switchgear, the turbine generator, and the control package. Additional components and interconnecting piping were packaged separately, as was the core. Another unique feature of the PM-2A is the use of air blast coolers for condensing turbine exhaust steam.

For the purposes of this report, the PM-2A design was assumed to be frozen as of July 1961.

a. Primary system

The primary system consists of the reactor core, reactor vessel, coolant pumps, steam generator, pressurizer, and associated piping to form a closed loop. The coolant flow is from the discharge of the coolant pump, through the reactor where it picks up heat, to the steam generator and through the tubes where it transfers heat to the secondary cycle, and then back to the suction of the main coolant pump. The primary system operates at an average temperature of 509°F with a constant flow of 4,240 gpm. A pressure of 1,750 psia is maintained by the pressurizer. At full power, the coolant transfers 10 Mw of thermal heat. This amount of heat is capable of producing 1560 kw of electrical power and 1,000 lb/hr of steam for snow-melting. The primary coolant not only removes heat from the reactor core, but also cools the thermal shield and the pressure vessel.

PM-2A DATA SHEET

General

Net electrical output, 0.8 pf	kw	1,560
Auxiliary power	kw	420
Gross generator	kw	1,980
Space heat req's	kw	300
Reactor heat output	kw (th)	10,000
Equivalent efficiency	%	18.6
Electrical efficiency	%	16

Primary system

Number of loops		1
Number of coolant pumps		1
Reactor inlet temperature	^{o}F	500
Reactor outlet temperature	^{o}F	518
Operating pressure	psia	1,750
Coolant flow	10^6 lb/hr	2.125

Secondary system

Steam generator inlet temperature	^{o}F	315
Steam generator outlet temperature	^{o}F	463
Steam generation rate	lb/hr	38,400
Full load pressure	psia	480
Turbine throttle pressure	psia	465
Full load throttle flow	lb/hr	37,055
Extraction pressures		
1	psia	101
2	psia	39
Extraction flow		
1	lb/hr	2,700
2	lb/hr	4,605
Turbine back-pressure	in. hg. abs	8
Full load condenser flow	lb/hr	29,750
No. of condensate pumps		1 (1 reserve)

PM-2A DATA SHEET (cont'd)

Secondary system (cont'd)

No. of feedwater heaters		2 (L&H)
No. of boiler feed pumps		1 (1 reserve)
Generator rating		
Power output	kw	2,000
Power factor		0.8
Kva rating	kva	2,500
Voltage	volts	4,160

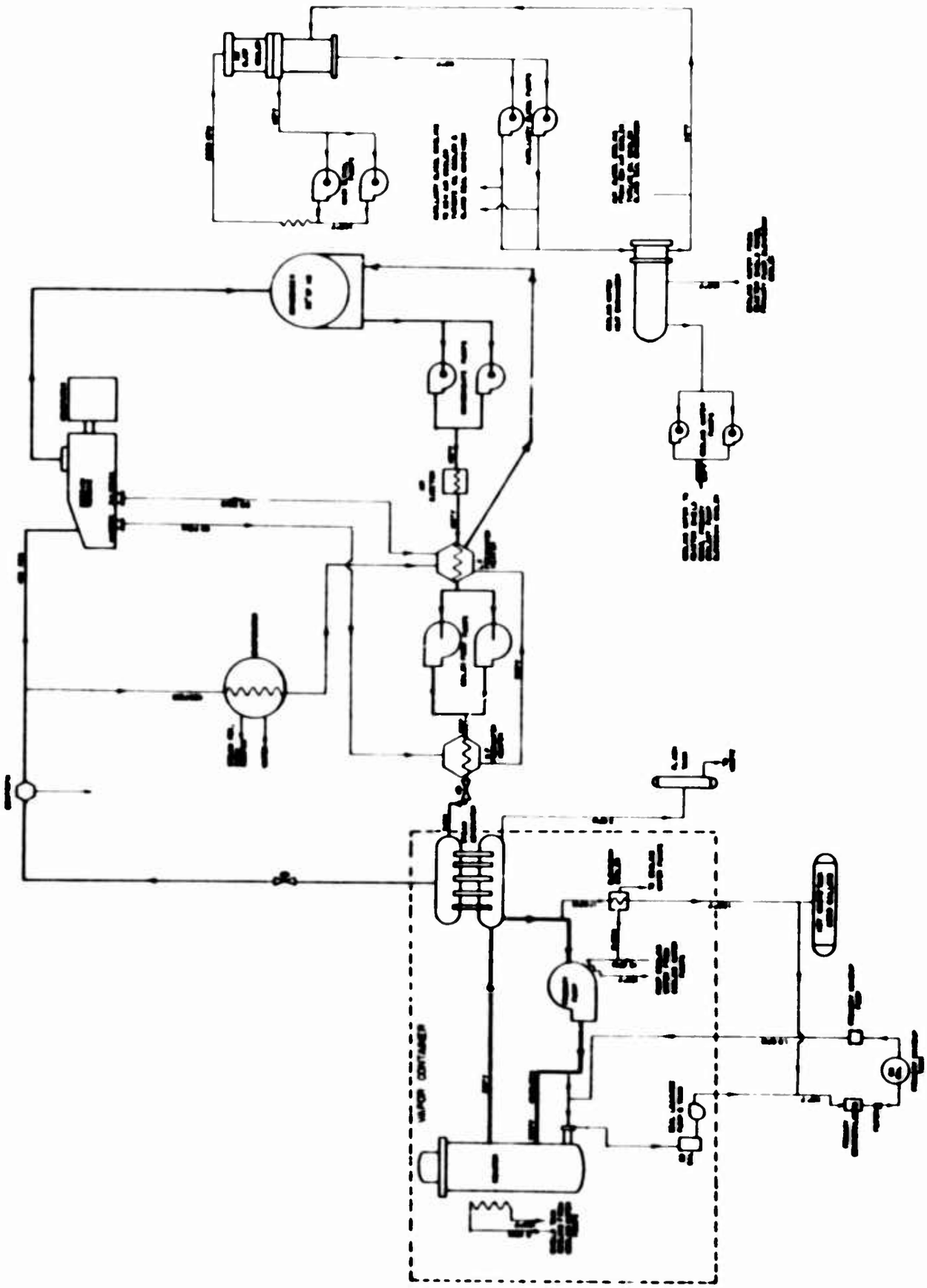

Figure 19. PM-2A flow diagram

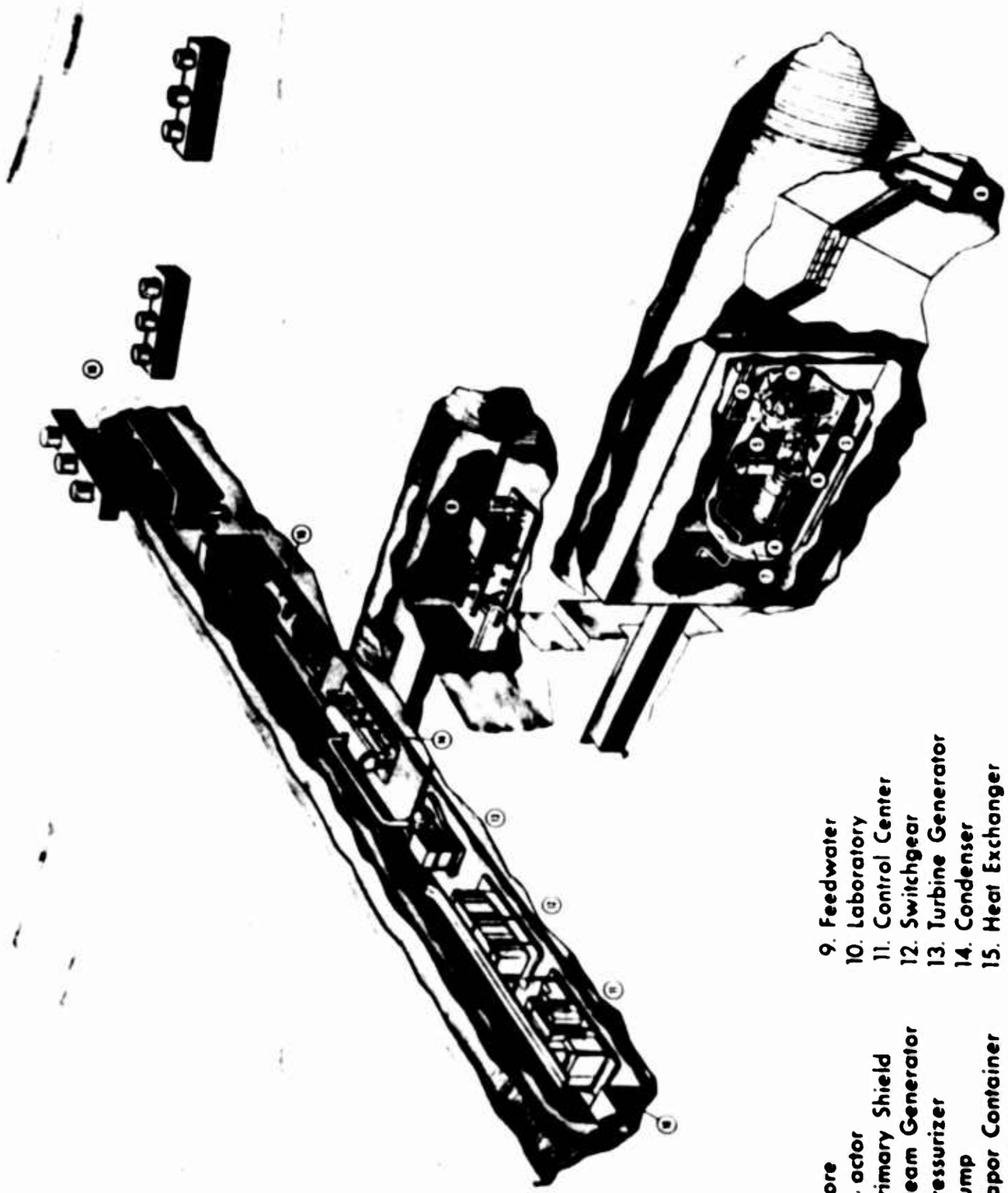

1. Core
2. Reactor
3. Primary Shield
4. Steam Generator
5. Pressurizer
6. Pump
7. Vapor Container
8. Hot Waste
9. Feedwater
10. Laboratory
11. Control Center
12. Switchgear
13. Turbine Generator
14. Condenser
15. Heat Exchanger
16. Air Blast Coolers

Figure 20. PM-2A nuclear power plant

(1) Reactor core

The major design requirements for the PM-2A Core I are a power level of 10 Mw, and core life of a minimum of 1 year at an average load of 80 percent rated capacity.

The core contains 37 plate-type fuel elements arranged in a 7 x 7 grid array with three positions removed from each corner. There are 32 stationary fuel elements and 5 control rod fuel elements. Since there are 18 plates in each stationary fuel element and 16 plates in each control rod fuel element, the aggregate number of plates in the core is 656.

The PM-2A core contains U-235 in the form of fully enriched UO_2 and B-10 in the form of B_4C. The UO_2 and the B_4C are incorporated in a stainless steel matrix. This matrix is clad with stainless steel by the "picture frame" method of plate fabrication. The cladding serves to prevent exposure of the fuel matrix to pressurized primary water.

Each control rod fuel plate contains an integral flux suppressor consisting of Eu as Eu_2O_3 dispersed in stainless steel. The suppressor forms the top 7/8 inch of the fuel plate meat. The fuel plates are brazed into side plates. Water passage between fuel plates is 0.133 inch.

In addition to its fuel element, each control rod includes an absorber section, consisting of a square box of four plates welded at the corners. The absorber plates are fabricated in the same manner as the fuel plates and consist of europium oxide uniformly dispersed in a stainless steel matrix and clad with stainless steel. Each absorber plate is 0.156 inch thick.

(2) Reactor vessel

The reactor core, including control rod assemblies, is enclosed within a pressure vessel. The pressure vessel, which is 124 9/16 inches long (including insulation and drain nozzle) consists of a cylindrical shell, 37 1/2 inches inside diameter, a 39 1/2-inch hemispherical head to close the bottom of the vessel, and a flanged elliptical head for the top closure. The top closure is sealed by an octagonal gasket and is attached by means of 18 studs, 2 3/4-inch diameter, threaded into the upper flange of the pressure vessel.

The vessel is designed and fabricated in accordance with applicable sections of the ASME Boiler and Pressure Vessel Code, Section VIII, Unfired Pressure Vessels, 1956, and Code Case 1234. The octagonal gasket is made from 304 stainless steel and all internal surfaces of the pressure vessel are clad with 3/16-inch-thick 304 stainless steel.

The pressure vessel shell and fixed head are penetrated at five points; i.e., two 10-inch integrally reinforced, primary coolant nozzles; one 1 1/4-inch nozzle for the decay heat system; one 1 1/4-inch nozzle in the bottom head for the decay heat system and draining, and one multiple opening penetration for the five tubular members which house the control rod drive shafts. The latter tubes extend outward in a cluster a distance of 54 inches from the centerline of the pressure vessel.

Four vessel supports 90° apart and 84 inches below the vessel flange locate and position the pressure vessel in the shield tank on the primary skid. Four core support bolting brackets are located internally 90° apart at a level midway between the inlet and outlet primary coolant nozzles. The latter brackets locate and secure the support ring which in turn locates and secures the core support structure, helical baffle, and thermal shield.

The thermal shield is a 2-inch-thick cylinder, 23 1/2 inches inside diameter, made of cast SA-351 Gr. CF8 stainless steel. The thermal shield surrounds the active core inside the pressure vessel and reduces thermal stresses in the vessel wall caused by gamma heating. The 360° helical baffle is located between the thermal shield and the pressure vessel wall to provide positive circulation of primary coolant.

The pressure vessel shell and the removable head are surrounded by 2 inches of thermal insulation which is jacketed with 1/8-inch-thick 304 stainless steel around the vessel and 3/16-inch-thick 304 stainless steel over the cover.

(3) Primary circulating pump

The primary pump is a vertical-shaft, single-stage, single-suction, centrifugal pump having vertical inlet and horizontal discharge, and a "canned rotor" induction-type driving motor. The pump is hermetically

sealed and designed for double thrust; i.e., both up and down. The pump circulates the primary coolant through the reactor and steam generator. The pump case is welded into the primary piping. The motor and impeller assembly is flanged into the pump case and removable from it. Provision is made for seal welding, but will be used only in the event of damage to the gasket or flange faces. Zero leakage is a specific requirement. The pump output is 4,890 gpm at 47 ft head and 500°F. The major components of this assembly are constructed of type 304 stainless steel.

The unit is designed for a minimum of 18,000 hours of maintenance-free operation at rated operating conditions and a normal life expectancy of 20 years. Sealing is maintained by having motor cavity and pump at the same pressure. This is accomplished by flooding the motor cavity with the fluid being pumped. A "canned rotor" means that the rotor and stator of the motor are canned in liners of highly corrosion-resistant material so as to eliminate access of fluid pumped to the rotor or stator. Since the fluid pumped is at high temperature, the motor is encased by a cooling coil to remove the electrical and mechanical heat generated. Heat is dissipated to the auxiliary cooling water system.

(4) Steam generator

The steam generator is a horizontally mounted tube-in-shell, two-pass unit with U-bend tubes, and fabricated in accordance with Section VIII of the ASME Unfired Pressure Vessel Code.

It supplies 37,700 pounds of dry saturated steam per hour at 480 psia and 462.8°F. The steam generator is basically a carbon steel vessel. However, all materials in contact with the primary fluid are stainless steel type 304, either solid or integrally clad on carbon steel.

The unit, which is approximately 144 inches in overall length, consists of a cylinder, 48 inches inside diameter by 47 inches long, having a 2:1 elliptical head on one end and a transition piece necking the other end down to the integral closing flange and tube sheet. The closure consists of a flat head with two penetrations to which standard 10-inch, 1500-weld neck flanges are welded. These flanges are the primary coolant water inlet and outlet piping connections. The flat head is 10 3/4 inches thick and is sealed

by an octagonal stainless steel gasket and attached by means of 22 alloy steel studs, 2 3/4 inches in diameter, threaded into the integral closing flange and tube sheet. All nozzle penetrations are suitably reinforced.

The steam generator is covered by 4 inches of insulation and secured to the skid, allowing movement horizontally along its long axis for expansion.

(5) Pressurizer

The primary loop pressurizer performs the basic function of maintaining the primary loop system at the operating pressure. This is accomplished by keeping its contained water, which is essentially static, at saturation temperature corresponding to the desired pressure. The upper portion of the pressurizer volume is occupied by steam in thermal equilibrium with the water, and exerts system pressure on the primary loop. A secondary function of the pressurizer is to suppress the pressure excursions resulting from changes in plant load and their associated temperature transients in the primary coolant system.

The pressurizer is a cylindrical pressure vessel 25 1/2 inches inside diameter with hemispherical heads. The wall thickness of the cylindrical section is 2 1/16 inches. The overall length is approximately 83 3/4 inches. It contains 20 commercial-type electric heaters which provide 20 kw for steam generation. Each heater is inserted in a heater well. The heater wells, located in the lower section of the pressurizer, are sealed against primary system water, thus permitting heater replacements without interference with the primary circuit.

The pressurizer vessel is designed and constructed in accordance with Section VIII of the ASME Unfired Pressure Vessel Code, and is so stamped. Operating conditions are 1,750 psia and 617°F. The normal water volume is 5.1 cubic feet and normal vapor volume is 13.8 cubic feet. These volumes limit maximum overpressure to approximately 200 psi on loss of load. The pressurizer is fabricated of stainless steel type 304.

(6) Primary piping

The primary coolant piping completes the circuit of pressurized

and demineralized water used to transfer heat from the reactor core to the steam generator under forced circulation. It consists of two legs of 10-inch schedule 120 pipe (0.843-inch wall). The hot leg is the leg from the reactor outlet nozzle to the steam generator and the cold leg is the leg from the reactor inlet nozzle to the primary circulating pump. Both legs are welded to their respective reactor nozzles and run through the lower shield tank, terminating with standard 1,500-pound flanges. The hot leg is bolted to the steam generator and the cold leg to the primary circulating pump. The primary pump is also bolted to the steam generator. All bolted connections in the main primary piping are sealed by octagonal stainless steel gaskets.

All primary piping is constructed of stainless steel type 304 except for a short straight length of carbon steel pipe with a stainless steel clad overlay on the inside. This carbon steel piece is in the cold leg to compensate for the expansion differential caused by the difference in length and temperature between the hot and cold legs.

A fiberglass blanket insulates the primary piping where it is inside the lower shield tank. Thermoasbestos insulation is used on all the remainder of the primary piping, which is external to the shield tanks.

b. Secondary system

(1) Steam system

Dry and saturated steam at 480 psia is produced by a kettle-type steam generator located in the vapor container. The steam is supplied to the turbine-generator through a 6-inch pipe.

An in-line moisture separator is located upstream of the turbine inlet to remove moisture before entry of the steam into the turbine to protect the turbine against possible damage from entrained moisture.

The pressure drop characteristic of the steam generator causes steam to condense on the walls of the steam pipe during decreasing load transients when the pressure and temperature of the steam increase, while the wall temperature stays at a lower level becuase of the time required to store heat in the pipe wall.

The main steam line also supplies steam to the evaporator and condenser air-ejector. The evaporator produces low-pressure steam for snow-melting and other auxiliary purposes. The drains from the evaporator are discharged into the low pressure feedwater heater.

Twin safety valves located in the steam line inside the vapor container serve to protect the system. A trip valve in the main steam line isolates the steam generator in the vapor container in case of a high pressure scram.

The turbine generator is rated at 2,500 kva at unity power factor when operating at 8-inch back pressure and 440 psia dry and saturated steam at the inlet of the turbine. The 1,200 rpm generator is geared to the 7,450-rpm turbine. Two extraction points on the turbine provide steam to the high and low pressure feedwater heaters. The exhaust steam of the turbine is condensed in the condenser under 8 inches of Hg absolute pressure.

The turbine is designed to operate with varying inlet pressures and temperatures as developed by the steam generator over the load range. The turbine is protected against overspeed by an emergency governor which trips the oil pressure dump valve and closes the trip and throttle valve upon overspeed.

A low oil pressure alarm warns the operator if the bearing oil pressure falls below the minimum of 4 pounds.

If the back pressure of the unit goes above 5 psig the back pressure trip causes an oil dump, shutting down the unit by closing the throttle valve.

The generator is air-cooled by forcing ventilating air through the machine by fan blades attached to the rotor of the generator. An air-to-ethylene glycol cooler rejects the heat from the generator in the air-blast cooler.

(2) Condensate and boiler feed system

A surface condenser condenses the exhaust steam from the turbine. The condensate is collected in the hot well. Deaeration of the condenser is accomplished by air ejectors. The heat of condensation is

rejected to the atmosphere via the circulating ethylene glycol cooling system. The level of radioactivity in the hot well is measured and recorded, and an alarm will be activated upon high radioactivity level.

Condensate pumps remove the condensate from the hot well and pump it through the air-ejector after-condenser and the low-pressure feedwater heater to the suction of the boiler feed pumps. The boiler feed pumps pump the condensate through the high-pressure feedwater heater to the steam generator in the vapor container. The drains from the feedwater heaters are cascaded to the condenser. A three-element feedwater controller controls the feedwater flow into the steam generator.

Steam flow and feedwater flow are sensed and the error signal is used to set the control valve. The control action is biased by a signal from the liquid level in the steam generator.

Morpholine and sulfite are injected into the condensate line upstream of the low-pressure feedwater heaters by positive displacement pumps.

The low-pressure feedwater heater receives the drains from the evaporator.

(3) Circulating ethylene-glycol coolant system

The condenser coolant is a 60-percent ethylene-glycol solution circulated by two centrifugal pumps. Three airblast coolers reject the heat to the atmosphere.

In the airblast coolers, motor-driven fans blow air from the snow tunnel through a fin-tube core and ductwork to the atmosphere. The air in the tunnel will be replenished by air filtering through the snow walls of the tunnels. This results in a negative pressure in the tunnel of approximately one inch of water relative to atmospheric.

An auxiliary glycol cooling system rejects heat from the generator cooler and turbine lube oil cooler, and from the auxiliary heat exchanger, which couples the auxiliary system serving the primary system.

The auxiliary glycol cooling system has its own circulating pumps and expansion tank. The glycol-to-air fin-tube cores for the final

heat rejection to the atmosphere are an integral part of the airblast coolers, which serve the condenser.

The auxiliary cooling water system provides cooling for plant components located within the vapor container and boiler feed-pump seal coolers. The plant components within the vapor container are the shield tank cooling coil, the primary pump cooling coil, and the primary blowdown cooler. The auxiliary cooling water system has its individual pumps, which circulate water through the coolers and through the intermediate cooling water heat exchanger where the heat is given off to the auxiliary glycol cooling system.

The flow rate in each of the individual cooling water lines can be regulated outside the vapor container by manually operated valves. Solenoid valves are provided in each of these lines to isolate the vapor container when required.

c. Electrical system

The power distribution system consists of two major subsystems: the unit station 4,160-volt bus and the motor control center 480-volt bus. The main generator feeds 4,160 volts to the high-voltage substation for distribution to two 1,200-amp-capacity site-feeder lines and to plant service distribution. A standby diesel generator tie-in line connects to the substation bus. A station service transformer reduces the 4,160 volts for distribution through the motor control center to the plant components mounted on the skids.

The high-voltage substation is mounted on one skid and contains standard switchgear, the station service transformer and equipment for control of the turbine-generator. The 480-volt motor control center together with auxiliary power supplies, lightning distribution equipment, and the main control console are mounted on a second skid.

The auxiliary power supply systems consist of 115-volt AC instrument power, nonregulated power, preferred power, lighting system, and a 28-volt DC power supply.

(1) Generator

The generator is a 2,000-kw, 6-pole, three-phase wye-connected, revolving-field, synchronous AC machine of enclosed drip-proof construction.

The magnetic amplifier voltage regulator equipment serves as an exciter for the generator as well as an automatic generator voltage controller (4,160 volts). Generator excitation can be controlled manually at the console by a rheostat. Generator terminal voltage is controlled within ±1 percent of rated voltage over the entire load range.

Two sources of excitation energy are used; the 34.6 to 31.4 amp current transformers, and the three-phase, 60-cycle, 480-volt supply through a three-phase power magnetic amplifier whose output is rectified and applied to the generator field. A reactive drop compensator causes generator voltage to drop in proportion to reactive current to permit parallel operation of the generator with the diesel generator sets. A damping transformer and filter choke between generator field and preamplifier will prevent limiting of the generator voltage under regulator control. A Thyrite resistor protects the silicon rectifiers from damage to transient voltage surges.

(2) Unit substation

Ten units of metal-clad high-voltage switchgear containing air circuit breakers, busses, current transformers, potential transformers, protective relays, and secondary control devices accomplish control of the 4,160-volt circuits. High-tension compartments enclosing the current transformers and bus connections require the removal of bolted-on covers for entry. These covers will be removed only after de-energizing the circuits.

Circuits are provided for incoming lines from the turbine generator, a station service line and transformer, two outgoing site feeder lines, and one incoming line from standby power.

Instruments and protective relays are mounted on the panels in front of the switchgear. A percentage differential relay with coils on either side of the generator armature protect the generator from internal faults.

A reverse power relay protects the generator from motoring.

Overcurrent relays protect the feeder lines and station service circuits from overcurrent.

Electrically operated, three-pole, 4,160-volt air circuit breakers are tripped automatically when the safety devices are activated and can be tripped manually.

The breakers are mounted in horizontal drawout units which cannot be pulled out with the breakers in the closed position.

The 500-kva station service transformer of nonexplosive, fire-resistant, air-insulated, dry-type construction is cooled by natural air circulation through the windings. The enclosure can only be entered after removal of bolted-on doors. This transformer supplies station power.

The 225-kva utilities transformer is liquid insulated, self-cooled by a fireproof nonexplosive liquid. Its construction is such that all live parts and conductors are completely shielded and it can be entered only after removal of bolted covers.

This transformer supplies power to a distribution panel feeding the tunnel heating and ventilation system and a portion of the lighting system.

(3) Auxiliary power supply systems

A 480-volt, 30-amp, main circuit breaker, a 480- to 120-volt power transformer and a six-circuit distribution panel are provided for 115 volt AC instrument power. A 480-volt, 15-amp main circuit breaker, a 480- to 120-volt transformer and a six-circuit distribution panel are provided for 115-volt AC nonregulated power. Preferred power of 115 volts AC is produced for certain instruments which must remain in operation at all times. The 28-volt DC system supplies power to tripping circuits of the 4,160-volt circuit breakers, certain instruments, and controls. The system is powered by a rectifier charger and a 20-cell, nickel cadmium, 24-volt battery for emergency use when AC power fails. The electronic rectifier charger converts 115 volt AC to DC power at constant voltage.

(4) Standby diesel generators

Three 300-kw diesel generators supply standby and emergency

power for Camp Century. One unit is required for a cold startup of the PM-2A. If the turbine-generator unit trips off the line, the diesel units are started manually. Battery-powered, automatically operated lighting units are installed for emergency lighting in the event of a PM-2A power failure.

d. Instrumentation and control

The nuclear and plant process instrumentation and control system for this plant is entirely electrical. A standard pneumatic system was not used because of inherent sensing and control time lags, and maintenance and portability problems.

The control valves for feedwater, blowdown, etc., are electro-hydraulic. Each valve has its own self-contained hydraulic system and a handwheel for manual control, should any field repairs become necessary.

The process instruments use magnetic amplifier techniques in place of vacuum tubes, except in (a few) process monitoring circuits which do not dirctly affect plant operation or safety.

The nuclear instrumentation and control uses military standard silicon transistors exclusively, for maximum reliability. All the circuits are wired plug-in modules to reduce downtime for required maintenance. Using this concept, trouble in a given nuclear channel will be remedied by replacing a module. This particular module will then be repaired in the instrument laboratory or returned to the manufacturer.

(1) Source range or startup channel

The source range instrumentation or startup channel utilizes a BF proportional counter as the sensing element and monitors a range of power from shutdown to approximately 10^{-3} percent of full power.

The intermediate range instrumentation or log N channel monitors a range of power of approximately 10^{-4} percent to 100 percent. A compensated ion chamber is used as the sensing element. Approximately two decades of overlap between this channel and the startup channel are present to ensure reliability and safe switchover between channels.

(2) Power range or safety channels

The three power range channels monitor reactor power from 7 to 150 percent of full power. The power range instrumentation employs three uncompensated ion chambers as its sensing elements.

The power channels provide a scram signal when the power level exceeds 120 percent full power. Two-out-of-three coincidence is used to initiate a high-level power scram. This ensures safety and reliability in the range most used in plant operation. To further increase safety and reliability, the outputs of each power range channel are compared and a variation of ±5 percent is annunciated so that corrective action can be taken.

(3) Scram logic circuitry

The scram logic circuitry performs the proper logic operation required to determine scram functions and prevent rod withdrawal upon receipt of nuclear and process signals. Logic circuitry is provided to permit testing one of the instrumentation channels without causing false scrams. This circuitry also allows the removal of one process channel to permit emergency repairs.

The scram logic circuitry utilizes two solid-state relays which supply a half-wave rectified voltage to the control rod solenoids and automatic drive-down relays during normal operation. The solid-state relays become nonconducting on a scram signal, thus releasing the scram solenoids. Either solid-state relay is capable of supplying current to the scram solenoids and auto drive-down relays. Two are used for reliability.

A manual reset button is provided which requires a manual resetting by the operator of the scram circuitry to permit rod withdrawal after a scram. Upon the incidence of the reactor scram, the scram logic circuitry locks itself out to prevent re-energizing the clutches before the rods have dropped all the way down. To override this lockout and reactivate the reactor it is necessary for the operator to push the manual reset button

(4) Self-testing circuitry

The self-testing circuitry provides continuous comparison and self-testing of the critical circuits and functions of the nuclear instrumentation

system. Normal circuit operation is not affected by the testing, and any failure or abnormal condition is indicated and annunciated. Five separate testing subsystems are provided and include the following:

(a) A bistable trip test subsystem which indicated the operating condition of each bistable and also indicates and annunciates the failure of any bistable trip.

(b) A test alarm subsystem which actuates an annunciator when any two channels are removed for test at the same time.

(c) A power range channel comparison subsystem which indicates and annunciates any failure or discrepancy between the safety channels.

(d) A power supply test subsystem which monitors the pairs of power supplies in the scram logic circuitry, and indicates and annunciates any failure or discrepancy between the two.

(e) A solid-state relay test subsystem which indicates and annunciates failure of any solid-state relay in the scram logic drawer.

3. PM-3A NUCLEAR POWER PLANT

A sister plant to the PM-1, the PM-3A has the distinction of being the Navy's first land-based power reactor and the first reactor in Antarctica. Located on the west side of Ross Island in McMurdo Sound, Antarctica, the PM-3A provides 1,500 kw of electrical power and 650,000 Btu hr in the form of steam for space heating and snow-melting for the Naval Air Facility there.

The Martin Company, under an AEC contract, initiated work on the PM-3A during August 1960. The plant arrived at McMurdo Sound on 15 December 1961 and a short 77 days later, with construction essentially complete, the PM-3A went critical on 3 March 1962.

The plant energy source is a pressurized water reactor which generates about 10 megawatts of thermal energy. The fuel is highly enriched uranium. The reactor circulating fluid is water at an operating pressure of 1,300 psia. Reactor control is applied by vertical Y-rods containing poison in the form of stabilized europium oxide. The secondary system working fluid is steam generated at 300 psia.

The major difference between the PM-3A and the PM-1 is that the PM-3A uses four containment vessels rather than the three used in the PM-1. The fourth tank is for expansion under accident conditions to ensure that absolutely no contamination is released in such a situation. The unique requirement imposed by the Antarctic Treaty which prescribes that no radioactive waste of any kind will be discharged on the continent, makes it mandatory for gaseous waste to be compressed into cylinders and, like solid waste, packaged for disposal off the continent.

For the purposes of this report, the design of the PM-3A was assumed to be frozen as of January 1962.

a. Primary system

The primary system consists of the reactor, coolant pump, steam generator, pressurizer and associated 6-inch piping. The coolant flow is from the discharge of the coolant pump, through the reactor where it picks up heat, to the steam generator, and through the tubes where it transfers the heat to the secondary cycle, and then back to the suction of the coolant

PM-3A DATA SHEET

General

Net electrical output, 0.8 pf	kw	1,500
Auxiliary power	kw	250
Gross generator	kw	1,750
Space heat req's	kw	1,067
Reactor heat output	kw (th)	9,360
Equivalent efficiency	%	27.4
Electrical efficiency	%	18.1

Primary system

Number of loops		1
Number of coolant pumps		1
Reactor inlet temperature	^{o}F	447
Reactor outlet temperature	^{o}F	479
Operating pressure	psia	1,300
Coolant flow	10^6 lb/hr	1.02

Secondary system

Steam generator inlet temperature	^{o}F	339
Steam generator outlet temperature	^{o}F	417
Steam generation rate	lb/hr	36,227
Full load pressure	psia	300
Turbine throttle pressure	psia	290
Full load throttle flow	lb/hr	33,201
Extraction pressures (1)	psia	130
Extraction flow (1)	lb/hr	4,840
Turbine back-pressure	in. hg. abs	6.6
Full load condenser flow	lb/hr	28,361
No. of condensate pumps		1 (1 reserve)
No. of feedwater heaters		1
No. of boiler feed pumps		1 (1 reserve)

PM-3A DATA SHEET (cont'd)

Secondary system (cont'd)

Generator rating		
Power output	kw	1,800
Power factor		0.8
Kva rating	kva	2,250
Voltage	volts	2,400/ 4,160

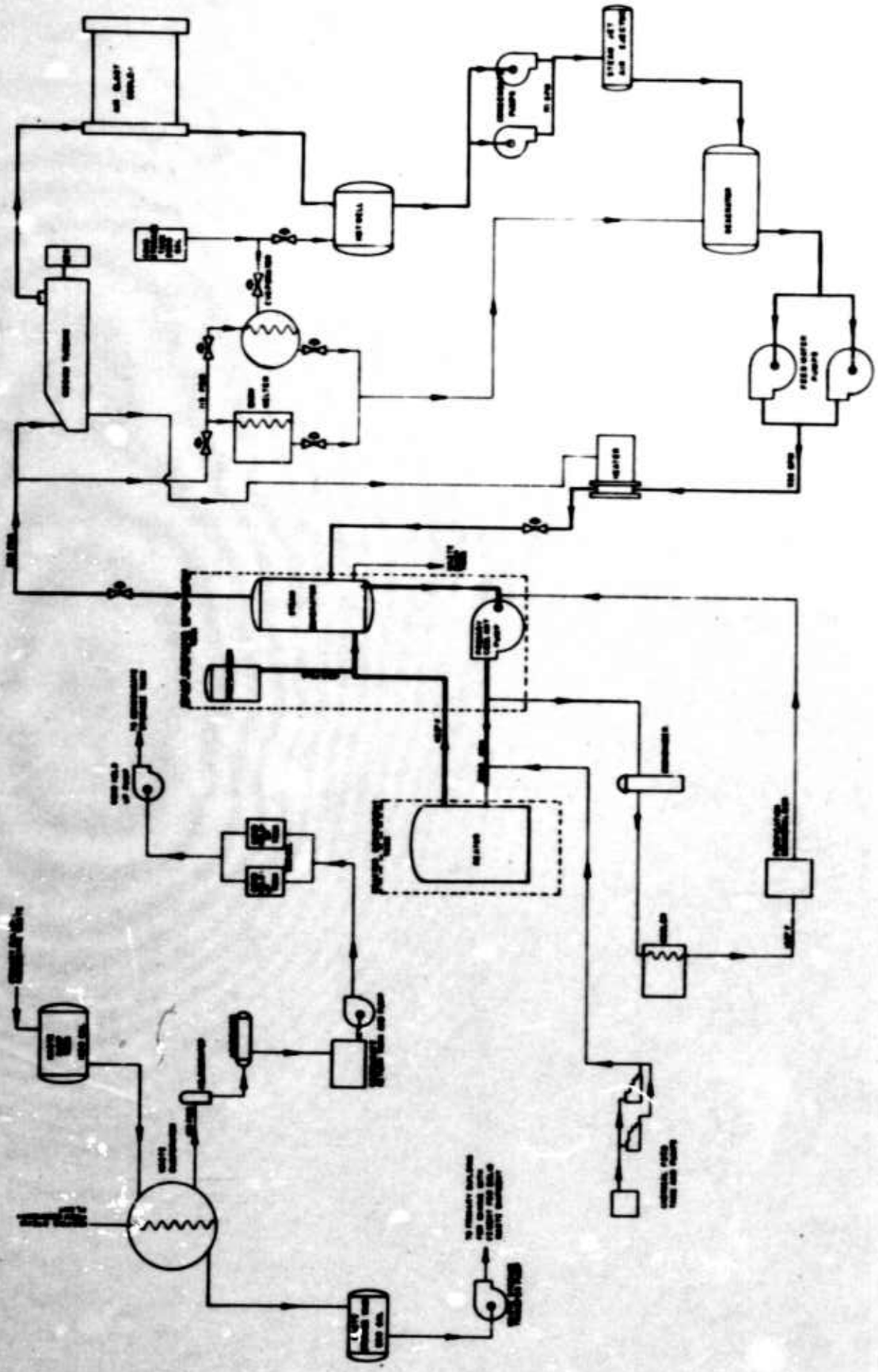

Figure 21. PM-3A flow diagram

pump. The primary system operates at an average temperature of 463°F with a constant flow of 2,250 gpm. A pressure of 1,300 psia is maintained by the pressurizer. At full power (100 percent) the coolant transfers 9.37 Mw of thermal heat. This amount of heat is capable of producing 1,500 kw of net electrical power at 0.8 pf and providing steam at approximately 2,500 lb/hr for the plant auxiliaries. The coolant not only removes heat from the reactor core, but also cools the thermal shield and the pressure vessel.

Upstream from the coolant pump suction is an enlarged section of 8-inch horizontal piping which induces turbulence and loss of velocity head in order to release air entrained in the coolant. A 3-inch pressurizer surge line connected to this enlarged section allows the released air to go up the line to the pressurizer.

(1) Reactor pressure vessel

The reactor pressure vessel houses the reactor core, contains the reactor coolant at operating temperature and pressure, provides inlet and outlet passages for the coolant, and serves as a mounting for the control-rod drive mechanisms. The vessel is essentially a right circular cylinder with ellipsoidal bottom and top. The top head is removable (bolted) to permit refueling of the reactor. The general dimensions of the vessel are

Outside diameter - 40 inches
Height - 106 7/16 inches
Inside diameter - 35.625 inches
Wall thickness - 2 3/16 inches

The vessel is penetrated by two 6-inch nozzles (for coolant inlet and outlet) in the shell portion; and by six control rod openings (1 3/8 inches in diameter) and an access port (3 1/2 inches in diameter) in the top head. The top head is attached to the vessel by a double gasketed, bolted joint.

The pressure vessel internals consist of the inlet water box, the flow distribution plate, and the thermal shields. The water box directs coolant inlet flow to the bottom of the vessel and core entrance, while the flow distribution plate provides a uniform flow around the thermal shields and to the reactor core. The thermal shields are provided to reduce nuclear

radiation heating of the pressure vessel wall. The water box and flow distribution plate are permanent parts of the vessel, while the thermal shields are made in segments so that they may be removed if necessary.

The vessel is made of type 347 stainless steel and is surrounded by fiberglass insulation which is enclosed in a stainless steel can. The can protects the insulation from the surrounding shield water. The vessel is also surrounded by 5-inch lead shielding, except on the refueling tank side where shielding is 2 inches thick.

(2) Reactor core

The reactor core provides the primary heat source for the power plant. It is highly enriched, using uranium-235 encased in tubular-type fuel elements. Burnable poison rods are spaced throughout the core to allow a greater loading of uranium.

The core consists of two major assemblies: the shroud and the upper skirt. The shroud contains six peripheral fuel bundles, each with its own control rod, and one center fuel bundle which contains the primary neutron source. The shroud is fixed axially and radially at its upper end by the inlet orifice plate and allowed to expand downward from this position. Dowel pins on the shroud fit into slots on the orifice plate to align the shroud angularly. These pins are located in a non-equiangular manner so that the shroud may be located in one position only.

The upper skirt assembly sits over a lip on the core shroud and is aligned to it by pins on the shroud. Four integral tabs at the top of the skirt radially locate its top within the throat of the pressure vessel. A double leaf spring, loaded against the pressure vessel head, supplies the hold-down force through the skirt and core shroud to the orifice plate. Thus, the skirt is free to expand thermally against this spring. The upper skirt assembly orifices the coolant flow between the core and the exit plenum chamber, thus minimizing any irregular radial flow variation. A portion of the coolant flow is directed to the reactor head for cooling.

The shroud, completely loaded with fuel bundles and control rods, is shipped to the reactor site as a single unit. A core handling fixture is used

to positively lock both the bundles and control rods within the shroud. After inserting and locking the primary neutron source into place in the center fuel bundle, the shroud assembly is lowered into the reactor containment vessel as a unit and seated in the pressure vessel. The locking fixture is then removed, the skirt assembly is set in place, and the vessel head is bolted down, completing the loading procedure.

When in operation the core is cooled by a continuous flow of pressurized water which also acts as a moderator. The coolant enters the inlet water box through the inlet nozzle. From the water box it flows down through the orifice plate, between the thermal shields, and into the bottom of the vessel. From there, it flows up through the core (passing through and around the tubular fuel elements), into the exit plenum chamber, and out through the outlet nozzle.

When the fuel in the core has been expended, the control rods and fuel bundles are locked into place by a special core handling fixture and the entire shroud assembly is replaced. This unit is transferred by use of special refueling tools from the reactor pressure vessel to a storage cask located in the spent-fuel containment vessel. There the radioactivity is allowed to decay for a period of time before the core is removed from the plant. A special shipping cask is provided for shipping new or used cores.

The replacement core does not need a primary source. The startup neutrons are supplied from a secondary source which is activated during the initial core life. The secondary source is located in the thermal shields.

(a) Core elements

Three types of core elements are included in each fuel bundle: fuel, poison, and dummy. These elements have identical external dimensions to allow complete interchangeability. The fuel and dummy core elements are of tubular design while the burnable poison elements are solid rods.

The fuel element contains UO_2 dispersed in and clad with stainless steel. Its meat (UO_2 clad with stainless steel) is nominally 0.0285

inches thick and is sandwiched between cladding of 0.0065-inch thickness. When assembled into a fuel bundle, the active fuel region starts 1 inch above the top surface of the lower grid and ends 1 inch below the upper grid. The elements are 33 1/4 inches long and have an active length of approximately 30 inches.

The burnable poison elements are substituted for fuel elements, as required, to provide the desired nuclear characteristics. These elements are unclad and are fabricated from a material of natural boron alloyed in stainless steel. The effective poison length is the same as the fuel length except for three elements (20 inches long) located at the root of each control rod.

Dummy core elements are incorporated into each peripheral bundle to fill in space at the core periphery where the basic triangular element pattern ends, thus reducing flow requirements. These elements are stainless steel tubes containing plugs to block the flow. These plugs have a small bleed flow to eliminate the stagnant water area.

(b) Control rods

The control rods are made in a Y-shaped configuration to fit in the triangular core element pattern. Its poisoned region, consisting of an europium compound dispersed in stainless steel, is contained within a stainless steel cladding of nominal 0.030-inch thickness. Each control rod is guided by wear pads contained on the lower edge of each blade and a wear ring located at its upper hub. The wear ring also includes the pickup ball used in latching the rods to their drive mechanisms. The wear pads slide in the control rod guide rails to provide lower radial and overall angular alignment. Upper alignment is obtained through the wear ring which is enclosed within the guide tube of the skirt assembly. This tube, which is split to fit over the control rod during its withdrawal, interlocks with the guide alignment structure for each peripheral bundle. The wear ring and pads are made of 17-4PH steel to minimize wear between these parts and the guiding structure.

(3) Steam generator

The steam generator transfers heat from the reactor coolant to the secondary plant water to produce steam. At full power the steam generator produces 9.137 Mw of thermal heat in the form of 36,227 lb/hr of 300-psia dry and saturated steam. The steam pressure increases as the load decreases to a no-load value of 480 psia.

The steam generator is a vertical shell, tube-type, heat exchanger with an integral steam drum. The tubes, arranged in the form of an inverted U, contain the high-pressure reactor coolant. The shell contains the secondary steam-water mixture. The steam generator envelope is a cylindrical shell closed by two hemispherical heads. It has an outside diameter of 31 1/4 inches and is 17 feet long. The lower head contains two 6-inch nozzles (coolant inlet and outlet), four hand holes for maintenance, and is divided into two chambers (coolant inlet and outlet water boxes) by a baffle. The heat transfer surface is composed of 1/2-inch inconel tubes which join the two coolant chambers. The tubes are rolled and welded into a flat tube sheet which is inconel clad on the primary side. The shell and top head contains the steam separating equipment to remove moisture from the steam. It is penetrated by a 2 1/2-inch feedwater inlet nozzle, a 6-inch steam outlet nozzle, four 1-inch level indication and control fittings, and a 1-inch drain, a vent, and two blowdown fittings. The entire unit is made of carbon steel in all areas except those that come in contact with reactor coolant, which are either inconel clad or made of stainless steel.

(4) Reactor coolant pump

The reactor coolant pump supplies the driving force necessary to pump the coolant through the system. The pump is a completely sealed 1,800-rpm, 48-kw, canned rotor pump that delivers 2,250 gpm against a head of 95 feet of water during normal operation. The pump is water cooled and has thermocouples to measure upper and lower bearing temperature and cooling water outlet temperature. These are provided to warn of impending pump failure. The pump is located so that it can be removed from the coolant piping without requiring the reactor vessel to be completely drained.

(5) Reactor coolant piping

The reactor coolant piping is a seamless, 6-inch, schedule 80 piping made of type 316 stainless steel. Four flange joints are provided in the piping, two for quick installation or dismantling of the two packages containing the main coolant loop, and two for quick removal or installation of the steam generator.

(6) Pressurizer

The pressurizer is an 18-inch inside diameter, type 316, stainless steel, right circular cylinder with hemispherical ends and a length of 89 inches. The vessel has a total volume of 14.53 cubic feet of which approximately 4.74 cubic feet is filled with water during normal operation. There are 33 cartridge-type, 265-volt, 60-cycle, single-phase electric heaters located in the bottom portion of the vessel. The heaters are wired in three banks, each "wye" connected to a 480-volt, 3-phase, 60-cycle system. The three banks are rated at 4.8 kw, 7.2 kw, and 14.4 kw for the first, second, and third banks, respectively. The circuit for the first bank of heaters includes a transformer with taps at every 10 percent of voltage rating to adjust the heater output to 1/2 kw less than the pressurizer heat losses. The spray line enters the top of the vessel and terminates on the end with spray nozzles.

The reactor coolant must at all times be maintained at a sufficient pressure to prevent bulk boiling in the reactor core. If bulk boiling were allowed, the heat transfer characteristics in the reactor core would be affected. The resulting high temperatures could damage the core.

The pressurizer system eliminates the problems mentioned. Electric heaters, penetrating the lower portion of the pressurizer vessel, heat the water in the pressurizer to the saturation temperature of the primary system pressure. The resulting steam is confined to the upper portion of the pressurizer. The "steam bubble" acts as a plenum which will maintain operating pressure during the temperature changes of the primary system. When the reactor coolant temperature decreases, the water contracts and the pressurizer level decreases.

b. Secondary system

The secondary system consists of the steam generator, turbine-generator, main condenser, condensate pumps, steam-jet air ejector, deaerators, feedwater pumps, and feedwater heater. At full load, 36,227 lb/hr of 300-psia dry and saturated steam is produced by the steam generator. The main turbine receives 33,201 lb/hr of this flow, while the remainder is consumed by auxiliary systems. The turbine exhaust steam flow enters the air-cooled condensers (4) and gravity drains into the condenser hotwell. The condensate is then pumped by the condensate pumps through the air-ejector condenser into the deaerator, mixing with steam from the evaporator. It is then picked up by the feedwater pumps, pumped through the feedwater heater and into the steam generator at a temperature of 339°F.

(1) Steam generator

See primary system for description.

(2) Main turbine and generator unit

The main turbine and generator unit consists of a horizontal, multi-stage, condensing-type turbine and a direct-driven, three-phase generator mounted on a split bed plate. The governing and control equipment, with the exception of the remote mounted controls, are mounted on the turbine.

The turbine is a nine-stage unit with one Curtis stage and eight Rateau stages. An extraction point from the first stage bleeds steam to the feedwater heater. The steam at the valve chest at full load is 290 psia, 414°F with a flow of 33,201 lb/hr. Steam pressure at the extraction point is 130 psia and flow is 4,840 lb/hr at full load. The turbine exhausts at 6 inches Hg absolute with approximately 12 percent moisture. The turbine speed is 3,600 rpm.

The 3,600-rpm, two-pole, direct-driven generator has a nominal rating of 2,250 kva, 1,800 kw at 0.8 power factor, 4,160 volts, 60 cps. The generator is 3-phase, wye connected. The unit is of open-type construction and is self-cooled to minimize weight. The direct connected exciter is rated 25 kw at 125 volts.

Auxiliaries supporting the turbine generator include the lube oil system, oil conditioning and cooling systems, turbine control systems, and generator control systems. A coast-down lube oil pump operated from the DC bus provides continuous lubrication in the event that AC power is lost. If all power is lost, bearing oil may be supplied by a hand pump.

(3) Main condenser

The main condenser is made up of four box-shaped units, each approximately 8 feet by 8 feet by 15 feet long. The four units are assembled in two packages. The units each have a heat transfer surface of approximately 21,930 square feet.

The steam condensing section of each of the four condenser units consists of two main banks of finned U-tubes, one on each side of the unit. The steam enters the inlet steam chamber and flows through the finned tubes where it is condensed by air flowing across the outside of the tubes. The condensate and noncondensable gases then flow from the main discharge chamber to the air cooler. The noncondensable gases are drawn through the finned air cooler tubes where remaining portions of the steam are condensed and the gases are removed by the air ejector. The condensate then flows from the air cooler to the hotwell.

The cooling airflow for the main condenser is provided by eight motor-driven fans, two for each condenser unit. These fans and their butterfly discharge valves are mounted on the top of the condenser units. The airflow across the main bank U-tubes is controlled by six sets of louvers (three on each side) for each condenser unit. The airflow across the air cooler section is controlled by one set of louvers located at the water box end of the condenser unit. The fans are direct-driven by the 25-hp, 440-volt, 60-cps, 3-phase, totally enclosed, fan-cooled, reversible squirrel cage induction motors. One fan in each unit is wired for full and half speed operation. Each fan blade is 48 inches in diameter and is equipped with a fan discharge stack that houses the air discharge valve.

(4) Condenser hotwell

The condenser hotwell serves as a surge tank for the condensate

system. The hotwell is a horizontal, cylindrical steel tank 28 inches in diameter, 3/16 inch thick and 7 1/2 feet long. The tank has an operating capacity of 110 gallons (220 gallons full) and a design pressure of 15 psig. The tank is located in the end of the heat transfer apparatus package with its centerline 5 feet above the package floor and is vented to the main turbine exhaust line.

(5) Condensate pumps

There are two identical centrifugal condensate pumps; one is motor-driven and the other steam turbine-driven. Normally, the motor-driven pump will be operated and the turbine-driven pump used as a standby. The pumps are horizontal, single stage, with vertically split casing single suction impellers. The design rating of each pump is 70.7 gpm at 109 feet total dynamic head.

The motor-driven pump is powered by a 5-hp, 3,450-rpm, 480-volt, 60-cps, 3-phase, drip-proof, enclosure-type motor. The turbine-driven pump is powered by a single-stage steam turbine which is equipped with a constant speed governor and an overspeed trip. The condensate pumps are located under the condenser hotwell in the heat transfer apparatus package. The condensate pumps are vented to the condenser hotwell vent line.

(6) Steam jet air ejector

The air ejector draws gases from the main condenser and the turbine gland seal system. It consists of three ejector elements and an aftercondenser. Two elements serve the main condenser while the third serves the turbine gland seal system. The main condenser ejectors are two-stage elements with one unit operating and the other acting as a standby. The gland seal ejector is a single-stage, single-element unit. The gland seal ejector element is provided to exhaust the steam and gases from the turbine gland seal system and discharge them to the ejector aftercondenser. Included as an integral part of the air ejector is a tube-in-shell heat exchanger (aftercondenser) with condensate flowing through the tubes and noncondensable gases and steam on the shell side. The aftercondenser gases are vented to

the atmosphere and the condensate is returned to the hotwell. The air ejector elements require a steam flow of 450 lb/hr at 115 psig. The entire component is located in the heat transfer apparatus package directly under the feedwater heater.

(7) Deaerator

The deaerator heats and removes dissolved gases (primarily air) from the secondary condensate and acts as a surge tank for the condensate and feedwater systems. The deaerator is a combined deaerator and storage tank with normal operating storage capacity of 400 gallons. The unit is a horizontal steel cylinder approximately 4 feet in diameter and 7 1/2 feet long with 1/4-inch-thick walls. The deaerator has a design pressure of 30 psig with a normal operating pressure of 5.5 psig. The oxygen content of the water leaving the deaerator will not exceed 0.005 cm^3/liter. The unit is installed approximately in the center of the heat transfer apparatus package with its centerline 5 1/2 feet above the package floor. The deaerator is equipped with a relief valve which will open if the deaerator pressure is excessive. It is equipped with a vacuum breaker that opens to prevent a vacuum from being formed in the deaerator.

(8) Feedwater pumps

There are two identical centrifugal feedwater pumps, one is motor-driven and the other steam turbine-driven. These pumps are vertical, six-stage, diffuser types with single suction impellers. The rating of each pump at operating temperature is 93.4 gpm at a head of 880 feet.

The motor-driven pump is driven by a 50-hp, 3,600-rpm, 440-volt, 60-cps, 3-phase, drip-proof enclosure motor. The turbine-driven pump is driven by a single-stage steam turbine which is normally supplied with 265 psia saturated steam. The steam turbine has a high back pressure trip set at 12 psig.

There are safety valves installed in the feedwater pump suction lines set to open at 50 psig. They will prevent excessive back pressures in the low-pressure piping due to failure of feedwater pump check valves and in the event either pump is started with both the suction and discharge valve closed.

Both pumps are installed in the heat transfer apparatus package adjacent to the deaerator.

(9) Feedwater heater

The feedwater heater is an eight-pass horizontal shell and U-tube heat exchanger with stationary shell and removable tube bundle. Feedwater flows through the tubes, and steam extracted from the turbine is condensed on the outside of the tubes and inside the shell. The heater is approximately 6 feet long by 2 feet in diameter. There are 156 (78 U's) 1/2-inch outside diameter Admiralty metal tubes. The shell design pressure is 195 psig and the tube design pressure is 600 psig. Feedwater enters the tubes at 229°F and leaves at 339°F. There are relief valves installed on both the shell and the tube sides of the heater. The unit is installed in the heat transfer apparatus package directly over the air ejector with its centerline approximately 5 feet above the package floor.

c. Electrical system

(1) Main station transformer and distribution systems

The main distribution system receives power from the main turbine generator. This power is transmitted from the generator through a three-conductor cable to the main generator breaker in the 5-kv switchgear cubicle 6. This circuit breaker is connected to the 4,160-volt main distribution bus. The site tieline circuit breaker and the main station transformer primary circuit breaker are also connected to the 4,160-volt main distribution bus.

The main station transformer is located in cubicle 2 of the switchgear housing. The secondary of the main station transformer is connected directly to the motor control center No. 1 main bus through a three-conductor cable. The emergency diesel generator is connected to the 480-volt bus through an air circuit breaker.

The instrument and control equipment for the main generator and the main distribution system is mounted in the 5-kv switchgear housing. The instrumentation and control equipment for the main station transformer secondary circuit breaker and the diesel generator circuit breaker is located

in the 480-volt bus cubicle. Indicating instruments and control switches for this equipment are located on the control console.

The power for the various station auxiliaries, the vital AC and DC systems, and the plant lighting system is supplied through circuit breakers mounted on the motor control center.

Motor starters and heater contractors for the station auxiliaries are also mounted in motor control center No. 1 and No. 2. Manual control switches, indicating lamps, and annunciator alarms for the auxiliary motors and heaters are located on the control console. Instrument signals are transmitted to the motor controllers from contacts in console-mounted switches, or instruments, or local transmitters mounted at the auxiliary equipment. A small number of auxiliaries are equipped with local controls and starters which are powered from manual circuit breakers located in motor control center No. 1 and No. 2.

(a) Switchgear enclosure

The switchgear enclosure is a seven-cubicle, indoor-type, metal-clad, rigid and freestanding framework. Five of the cubicles are for the 4,160-volt equipment, one cubicle houses the main station transformer and one cubicle houses the 480-volt equipment. The complete unit is approximately 14 feet 10 inches long, and 4 feet 8 inches deep. The 480-volt and transformer sections are 7 feet 6 inches high and the 4,160-volt sections are 6 feet 8 inches high. An aluminum cable tray 18 inches wide by 3 inches deep is mounted along the top rear of the 4,160-volt sections.

Automatic shutters are provided in the 4,160-volt breaker compartments to prevent accidental contact with the high voltage. The relays, watt hour meters, and indicating lamps are mounted on the hinged front panels. Current transformers and drawout-type potential transformers are mounted within the cubicles. The field circuit breaker, ammeter shunt, discharge resister and voltage regulation equipment for the main generator are mounted in cubicle No. 1. Space heaters are provided in the cubicles to prevent condensation within the equipment.

(b) Switchgear wiring and bus work

Wiring within the switchgear cubicles is a special thermoplastic insulated type and is brought out to terminal blocks. The bus work within the cubicles is fabricated from copper bar and silver-plated over the contact areas after fabrication. The 4,160-volt main bus is mounted across the bottom rear of cubicles 2 to 5. A copper ground bus is mounted in the bottom rear of these cubicles.

(c) Main station transformer

The main transformer is an indoor, dry-type, self-cooled unit and is rated 300 kva, 4,160-277/480 volts grounded neutral, three-phase, 60 cycles. The high voltage (primary) windings are connected delta and the low voltage (secondary) windings are wye-connected with a neutral ground. A five-position, no-load, tap changer is provided in the primary winding for voltage adjustment. The unit is designed for a temperature rise of 80°C above ambient. Three lightning arresters are connected to the primary of the transformer and three capacitors are connected to the 4,160-volt main bus for protection against voltage surges.

(d) Switchgear circuit breakers

The 4,160-volt magnetic air circuit breakers are of the three-pole, electrically operating, spring-loaded, draw-out type. They are equipped with mechanically and electrically trip-free closing mechanisms, shunt trip coils, auxiliary switches, operation counters, and mechanical position indicators. They have a rating of 1,200 amperes at 4.16 kv with a three-phase interrupting rating of 75 Mva. Their control voltage is 125 volts DC which is supplied from the plant DC system.

The 480-volt magnetic air circuit breakers are of the three-pole, electrically operated, draw-out type. They are equipped with mechanically and electrically trip-free solenoid closing mechanisms, shunt trip coils, and dual selective series over-current tripping devices. Their rating is 600 amperes at 600 volts AC with an interrupting rating of 35,000 RMS amperes at 480 volts. Their control voltage is 125 volts DC which is supplied from the plant DC system.

(e) Motor control center enclosure

The motor control center (MCC) consists of six metal-clad sections mounted on a common base to form a rigid, freestanding, self-supporting structure. The sections are approximately 20 inches square and 90 inches high, permitting the mounting of six NEMA size 1 starters, front and rear. Each section is composed of modular units which contain the circuit breakers, starters, transformers, indicating lamps and relays necessary for operating and protecting the auxiliary equipment. Sufficient space heaters are provided to prevent condensation within the equipment. The enclosure is semi-dustproof with gasketed doors.

(f) Wiring and bus work

Wiring within motor control center is NEMA class II, type B, and is brought out to terminal boards located in the bottom wiring duct. The bus within the cubicle is fabricated from high strength aluminum and silver-plated over the contact areas after fabrication. The main MCC bus which has a 600-ampere capacity traverses the top rear of the enclosure. Vertical taps in each section distribute the power to the individual circuit breakers. The bus bars are of rectangular cross section and are supported by insulated bus supports. The bus is braced for fault currents of 25,000 amperes RMS. A ground bus also traverses the bottom of the MCC with provisions for connection to the external station ground.

(g) MCC circuit breakers

The circuit breakers are of the air-break, molded case-type, manually operated and trip-free from the handle. They have dual protection with thermal inverse time trip on overload and instantaneous magnetic trip on short circuit. All circuit breakers have an interrupting rating of 15,000 amperes RMS at rated voltage. The circuit breakers are so constructed that the operating handles may be locked in the OFF position by means of as many as three padlocks. The breakers are also mechanically interlocked with the doors to the cubicles so that the doors may not be opened unless the breaker is in the OFF position. The interlock may be bypassed by a release mechanism to permit emergency access to the unit. The operating handles have a mechanical device that gives a positive indication as to

whether the breaker is in the ON, the OFF, or the TRIPPED position.

(b) Starters

The starters used in the motor control center are NEMA rated, magnetic-type with manual reset thermal overload protection. These resets are accessible without opening the cubicle doors. Each starter has a normally open auxiliary contact for seal-in and undervoltage protection. Other auxiliary contacts are provided when needed for proper control of the circuit.

The starter coils are rated at 110 volts, single phase, 60 cycles, and are supplied from individual control power transformers which are mounted in the MCC. The starters are used in combination with the circuit breakers described above to form combination starters.

(2) Vital AC and DC systems

A 125-volt battery furnishes power to the DC system. The battery is normally kept charged by a static battery charger. An auxiliary inverter-diverter motor-generator set is furnished to charge the battery when the static charger is out of service and to furnish AC power when the motor-alternator is out of service. Except for the vital AC system motor-alternator set, the battery load is supplied through a DC distribution panel. Switches are provided for isolating the battery and the motors from the remainder of the DC system. The 120-volt AC system normally receives its power from a battery-driven motor-alternator set which is located in the DC cabinet. The AC system may also receive power from the vital AC standby breaker in the motor control center. A 480-208/120 volt transformer, located in the DC cabinet, steps the voltage down to supply the vital distribution panel.

The vital AC system may be operated in either the automatic or the manual mode. In the automatic mode (normal operation) the vital AC bus receives power from the motor-alternator. When the output voltage of the static charger drops, the motor load shifts to the battery and the vital AC output continues with no interruption. If the 480-volt power source is still available, the inverter-diverter motor-generator set is energized to supply

the DC load including the battery charging function. In the manual mode, the inverter-diverter machine may be switched to supply the vital AC bus or to supply the DC bus while the vital AC is supplied directly from the 480-volt MCC bus through a transformer.

(a) Battery

The battery consists of ninety-five 1.2-volt cells connected in series, and are rated at 80-ampere-hours on a 1-hour discharge rate. It is mounted on a single-tier rack approximately 11 feet long. The cells are of the nickel cadmium sintered plate type in steel containers. The posts are nickel-plated steel brought out of the case through ebonite bushings. Intercell connectors are nickel-plated steel. The cells are mounted in groups of 5-inch steel and plastic boxes which are bolted individually into the rack. A shunt is furnished on the vital AC bus and DC bus equipment to provide indication of current on the control console. Also provided in the DC bus section are a knife switch to isolate and 100-ampere fuses to protect the battery.

(b) DC distribution panel

The DC distribution panel is rated at 125 volts (two wire), with a 100-ampere main breaker, 100-ampere mains, and twelve 20-ampere branch circuit breakers. A locally mounted ammeter indicates distribution-panel bus current and a separate shunt is provided for indication of this current on the control console. Bus voltage is also indicated on the control console.

(c) Static battery charger

The main static battery charger is rated at 125 volts and has charging characteristics to match the battery. Input to the charger is 480 volts, three phase, 60 cycle from the main vital AC supply. The charger uses only static devices including transistors, dry-type rectifiers, and magnetic amplifiers. It uses a magnetic amplifier with feedback to regulate the flow of current to the battery. The output of the amplifier is rectified using diode power rectifiers. Output voltage and current is indicated by meters located on the DC cabinet.

(d) Motor alternator

The motor is rated at 3 hp, 105-140 volts DC, 26.6-20 amps. It is a 4-pole, shunt-wound machine and is directly coupled to the alternator. The alternator is rated 2 kva, 1.6 kw, 208/120 volts, three -phase, 60 cycle at 1,800 rpm. Motor current and generator current are indicated by meters located on the DC cabinet.

(e) Inverter-diverter motor-generator

The AC motor-generator is rated at 10 hp, 208 volts, 29 amps. It is a four-pole, three-phase, wye-connected machine directly coupled to the DC machine. The DC motor-generator is rated 6 kw, 125 volts, 48 amperes at 1,800 rpm. It is a four-pole, compound-wound machine.

(f) Vital AC distribution panel

This distribution panel is located in the DC cabinet. It is rated 208/120 volts, three-phase, 4 wire. It is equipped with a 100-ampere main circuit breaker and twelve 20-ampere main circuit breakers and twelve 20-ampere, single-phase branch circuit breakers. It receives its power from either the motor-generator set or from the motor control center. The distribution bus voltage is indicated by means of a voltmeter located on the control console.

(g) Vital AC supply transformer

The supply transformer is rated 9 kva, 480-208/120 volts, three phase. It is a dry-type transformer and is used to step down the auxiliary distribution system voltage to the vital AC system voltage. The transformer is located in the DC cabinet.

(h) Battery charger transformer

A dry-type transformer is used to step down the voltage to the rectifiers of the static battery charger. It is rated 9 kva, 480-208/120 volts, three phase, 60 cps.

(i) Voltage regulator

The voltage regulator for the AC generator consists of a detector circuit, a transistor amplifier, and a magnetic amplifier. The

voltage detector measures the output of the AC generator and feeds a signal to the transistor amplifier which amplifies the signal. The output of the transistor amplifier is fed into the magnetic amplifier which automatically varies the current in the field of the AC generator to restore the output of the generator to a predetermined value.

(j) Speed regulator

The speed regulator consists of a frequency detector bridge circuit (tuned LC network), a transistor amplifier, and a magnetic amplifier. The frequency detector bridge measures the frequency of the generator output and feeds a signal to the transistor amplifier which amplifies the signal. The output of the transistor amplifier is fed into the magnetic amplifier, which automatically varies the field of the DC motor to restore the frequency of the AC generator to a predetermined value.

(3) Emergency power system

A diesel generator set is provided to furnish power to the station service system during startup and shutdown of the plant when site power is not available. The diesel may be started locally or remotely from the control console. The generator, however, can be synchronized with the electrical system only from the control console. A switch may be set to start the diesel automatically on loss of 480-volt bus voltage. At the same time the transformer secondary breaker is opened and when the generator attains rated voltage the D-G 480-volt bus breaker is closed. The rating of the generator at sea level is 200 kw, 0.8 power factor, 480 volts, 60 cycles, three phase at 1,800 rpm. It feeds power into the electrical system through an air circuit breaker in the main station transformer and distribution system switchgear.

The diesel generator is mounted on a common bed plate together with all its accessories. The diesel is a turbo-charged, vertical in-line, six-cylinder, four-cycle, overhead-valve, open-combustion-chamber, direct-injection engine. The generator is a self-excited, brushless, synchronous-type unit directly connected to the diesel.

d. Nuclear instrumentation system

This system is a completely solid-state modular system which is designed for minimum maintenance and maximum reliability. It is composed of three sets of neutron detectors and allied equipment. The sets are: (1) two source range channels, (2) two intermediate range channels, and (3) three power range channels. The system monitors reactor power over approximately ten decades (factors of tens) in three overlapping ranges with a minimum of two decades' overlap between successive ranges. The nuclear bistable outputs in the system and process inputs to the safety system are continuously tested for proper operation. A special fault monitoring system is provided to locate a faulty module (plug-in component).

The nuclear instrumentation system provides the following general functions:

(1) Neutron flux level information from source level to at least 150 percent power

(2) Reactor period information from souce level through full power

(3) Annunciator and/or scram signals for positive periods below preset limits

(4) Annunciator for discrepancies between safety system power supplies or for discrepancies between channels

(5) Annunciator and/or rod hold (stop withdrawal) signals for a low startup flux or short periods

(6) A means of continuously testing the system bistables for proper operation

(7) A fault location system to aid the operator in determining the location of a failed module

(8) A test and calibration signal for each channel

The system is housed entirely within the control room except for the neutron detectors (located within the shield water tank), the source range preamplifiers (located just outside the shield tank), and the interconnecting cable.

This system uses conventional solid-state nuclear instrumentation

throughout. The detectors are placed in guide tubes in the shield water tank, outside the reactor lead shielding in a full-power flux level corresponding to approximately 5×10^9 to 8×10^9 nv. Manual movement of the source range detectors is possible, thus providing the flexibility required to position the detector at the optimum flux level for either startup or full power requirements. The position of the detector is indicated at the drive location in the primary building. Approximately 5 inches of lead shielding is provided for the source, intermediate, and power detectors to ensure a sufficiently low (10^4 R/hr) gamma dose rate at the detector location. Boronated polyethylene will be used, if required, to surround the detectors and reduce the neutron flux rate to required levels. The detectors operate satisfactorily in an 80°C (176°F) ambient temperature without auxiliary cooling since the detectors are cooled by the shield water. All detectors are placed in waterproof cans (the can and cable are capable of operating completely submerged under 25 feet of water). A preamplifier, located above the shield water tank, is provided for the startup (pulse) channels. This guards against the effect of electrical noise generated within the detector cable. The intermediate and power range channel detector cables are connected directly to their respective signal and high-voltage cables in the primary system building.

The reactor safety system scram and logic drawer and pulse or current monitoring drawers, required to process the outputs of the detectors, are housed in the reactor instrumentation cabinets located in the control room. This equipment operates satisfactorily in ambient temperatures of 32 to 110°F and humidities up to 95 percent. Each channel measurement is compared to a corresponding channel measurement. When a discrepancy exists, a light is energized and a discrepancy annunciator sounds on the control console. Each channel has a built-in test and calibration circuit which provides a means of testing and calibrating the selected channel. The test system is interlocked in such a manner that the operator cannot scram the plant by any arrangement of test inputs during power operation.

(1) Source range (startup) channels

The startup channels consist of two BF_3 proportional counters and allied electronic equipment. These channels rely on the processing of

pulses resulting from the (n, α) reaction of a neutron with the B_{10} atoms in the gas. The sensitivity of the detectors is such that the detector channel will have a count rate of at least 2 cps from the subcritical multiplication of the neutron source, which is located in the center of the core.

Each detector's pulse is transmitted through the preamplifier. The preamplifier functions to match the impedance of the detector to that of the cable and transmits the pulse through the cable to the linear amplifier with maximum efficiency and minimum attenuation under adverse electrostatic or electromagnetic fields. The linear amplifier is composed of a high-gain, low-noise pulse amplifier, a discriminator, and a scale of two. This amplifier takes the pulses from the detector and converts them to constant amplitude and width pulses. The discriminator limits the linear amplifier's output to pulses resulting from neutrons and biases out those caused by noise, gamma rays, or extraneous pulses. These constant-amplitude, constant-width pulses are then processed by the log count rate circuit through a series of "pump-integrators" (log integrators A and B) which convert the pulses to a signal proportional to the log of the pulse rate. An amplifier takes this signal and amplifies it for use by the period amplifier. The period, or derivative amplifier is an integral-differential device which effectively differentiates the output of the count rate amplifier and provides a signal proportional to the inverse reactor period. The integral portion of the amplifier is a noise-limiting type which lends to the stability of the circuit. A modulator and a demodulator are used to eliminate the effect of circuit drift and changes in circuit parameters.

The outputs of channels 1 and 2 of the log count rate amplifier are compared and if a discrepancy greater than a preset amount exists, an amber light on the source range drawer goes on and a signal is sent to the annunciator system (on the control console). These signals are also suctioned (i.e., the highest value is passed) to provide a signal to the low count rate rod hold bistable.*

*All discrepancy signals for annunciation are wired so that any discrepancy from any compared signal will light an individual light and sound one common annunciator at the control console.

The selected output of the count rate amplifiers may be recorded on one pen of the recorder, which is common with the log N (intermediate range) recording. The count rate is recorded from 1 to 10^6 cps; this corresponds to only six decades on the seven-decade log N recording. The actual recording for the count rate at 1 cps will correspond to 10^4 nv on the chart, and at 10^6 cps to 10^{10} nv. An auxiliary amplifier is used to convert the output of the log CR amplifier to the required 10-50 milliamp signal for recording.

The outputs of channels 1 and 2 period measurement are compared. An amber light goes on and an annunciator signal is provided on a discrepancy beyond a preset value.

A period auctioneer is used to provide a signal to the short period channel 1 and 2 rod hold bistable, which provides a signal to the safety system.

A four-position selector switch (two for source range and two for intermediate range) is provided to allow for recording the selected reactor period. One auxiliary amplifier is provided to furnish the required 10-50 ma signal for the recorder.

A summary of the source range functions is as follows:

(a) Provides an indication of log count rate (1.0 to 10^6 cps) and period (-30 to +3 seconds) on meters located on the nuclear instrumentation panels in the control console. The indication from the appropriate channel can be recorded on the log count rate or period recorders through a selector switch.

(b) Provides output information to the reactor safety system to scram the reactor when both the channels indicate a positive period less than a preset value in the range of +100 to +3 seconds (normally 15 seconds).

(c) Provides output information to the rod withdrawal interlock system to prevent rod withdrawal when either of the channels indicates a positive period less than a preset value of between +100 to +3 seconds (normally 15 seconds).

(d) Provides output information to the rod withdrawal interlock system to prevent rod withdrawal when both channels indicate a count rate less than a preset value between 3 counts/sec. and 10^2 counts/sec. (normally 5 counts/sec.).

(2) Intermediate range channels

The intermediate flux measurement equipment consists of dual channels. Each channel contains a compensated ionization chamber and allied current processing, indicating, and recording equipment. Compensation is necessary to reduce the gamma current background, thus increasing the effective measuring range of the chamber. Before reactor operation, the compensating voltage will be set at the manufacturer's recommended setting, and readjusted, if necessary, whenever the reactor is shut down after a power run. The log N amplifier (composed of a modulator, log amplifier, and demodulator) converts the detector's current output to a signal proportional to the log detector output signal. The meter indicates the level from 2.5×10^3 to 2.5×10^{10} nv. The output of the log N amplifier is differentiated by the period amplifier, which is similar to those used for channels 1 and 2 and provides an output signal proportional to the inverse reactor period.

A comparator is provided for both the log N (power) and period measurements which lights an amber discrepancy light and provides a signal for annunciation when a preset discrepancy is exceeded.

The selected log N (power) and the period measurements can be recorded on the log count rate/log N power recorder and the period recorder, respectively. A separate auxiliary amplifier is provided for the log N circuit to furnish the required signal for recording, while the period recording uses the common amplifier, switch and recorder for both the source and intermediate range channels.

Two interlock bistables are provided for the source-range log CR circuits: (1) a bistable operating from channel 3 bypasses the source range period scram signal; and (2) a bistable from channel 4 both disables the high voltage for the source channels and prevents a low count rate signal for rod hold.

A period scram bistable is provided for each channel to furnish a signal to the safety system when the period reaches a preset limit.

The high voltage modules provide the required voltage for both the high positive voltage (for the detector) and the negative compensating voltage as required

The test and calibration circuit will be described in detail under the operating section.

A summary of the intermediate-range nuclear instrumentation functions is as follows:

(a) Provides an indication of log N (2.5×10^3 to 2.5×10^{10} nv) and period (-30 to ∞ to +3 seconds) information on panel-mounted meters on the control console. Means are provided for recording either log N channel or period channel output on strip chart recorders. The log N recording utilizes the second pen of the source-range-channel log count rate recorder, and either intermediate channel can be recorded through a selector switch. The period of any period channel can be recorded through a selector switch.

(b) Provides output information to the safety system to scram the reactor when both channels indicate a positive period less than a preset value between +100 and +3 seconds (normally set +15 seconds).

(c) Provides output information to the rod withdrawal interlock system to prevent rod withdrawal when either channel indicates a positive period less than a preset value between +100 and +3 seconds (normally 30 seconds).

(d) Provides a means of removing source range detector high voltage and removing the source-range scram and interlock function when the indicated flux level equals or exceeds a preset value between 2.5×10^4 and 2.5×10^7 nv (normally set at approximately 10^6 nv).

(3) Power range channels

The three linear power channels use uncompensated ionization chambers since the expected neutron current should be several decades above the gamma current. Three channels are used to provide a two-of-three scram signal to the safety system. The output signal of the chambers are amplified by the linear DC power amplifier and used for indication and

control. The output of each linear amplifier is displayed on a local meter, and the selected switch and auxiliary amplifier on the power range reactor. Each power channel is compared with the other power channels and an amber discrepancy light will go on providing a signal for annunciation when a preset discrepancy is exceeded.

A power auctioneer is provided to furnish a highest signal from channel 5, 6, or 7 to the high-power annunciator bistable, to the intermediate-range period scram bypass circuit, and to the fast insertion bistable.

The high-voltage supply provides the required voltage for the detector operation.

A summary of the power range functions is as follows:

(a) Provides through each channel an indication of reactor power (0 to 150 percent) by means of panel-mounted meters over the selected range of flux from 2.5×10^7 to 2.5×10^{10} nv. All channels will have an adjustable gain so that the 0 to 150 percent scale can correspond to the flux range of the two selected decades. The power indication from any one of the channels can be recorded through a selector switch.

(b) Provides output information to the annunciator and safety systems to scram the reactor when the indicated flux level reaches a preset level between 100 and 150 percent (normally 120 percent full power). The output of each channel is fed to a two-out-of-three coincidence circuit in the safety system which prevents a reactor scram on spurious noise signals and provides greater operational reliability.

(c) Provides a means of inactivating the intermediate-range channel scram and interlock functions when the power reaches a preset value between 2 and 100 percent power (usually 10 percent of full power).

(d) Provides a high-power annunciator on a power level from any channel above a preset value between 3 and 150 percent (usually 110 percent) of full power.

(e) Provides a fast insertion annunciation and safety signal when the power level is between 100 and 150 percent (usually 115 percent) power and stops fast insertion when the power level is between 90 and 140 percent (usually 95 percent).

4. SM-1 NUCLEAR POWER PLANT

The SM-1, located at Fort Belvoir, Virginia, has the distinction of being the first plant in the Army Nuclear Power Program (ANPP), and, as such, has been used as a tool for research and development and for operator training in the production of its successors.

Construction of the SM-1 was begun of 5 October 1955 by ALCO Products under contract to the Atomic Energy Commission; the first electric power was produced on 15 April 1957. The 700-hour performance test was completed before 10 July 1957. The Army Corps of Engineers assumed full responsibility for the operation of the plant on 1 July 1960.

The plant energy source is a pressurized water reactor which generates about 10 Mw of thermal energy and is capable of producing 2,000 kw of electrical power.

Since it was the first of its kind, the SM-1 had many special construction and operating considerations, not the least of which was its proximity to the highly populated metropolitan Washington area. Inclusion of constant air and water effluent monitoring and the characteristic, dome-shaped vapor container ensures the integrity of the system and precludes the remotest possibility of a dangerous release of radioactivity. A special operating consideration is represented by the plant's use in research and development activities, which requires special features for the plant and special training for its crew. For example, tests of fuel elements have allowed rapid progress in their design and construction by the contractors for other ANPP plants, and core physics work has greatly increased the efficiency and life of present-day reactor cores. The training of operators and supervisors for ANPP plants and Army research reactors places a special burden on the plant crew as well, for each year as many as 100 new enlisted operators and supervisors and 15 officers and warrant officers are trained at the plant.

For the purposes of this report, the SM-1 design was assumed to be frozen as of January 1961.

a. Primary system

The primary system consists of the following: reactor vessel,

SM-1 DATA SHEET

General

Net electrical output, 0.8 pf	kw	1.860
Auxiliary power	kw	140
Gross generator	kw	2,000
Reactor heat output	kw (th)	10,740
Equivalent efficiency	%	18
Turbine heat rate	Btu kwh	3,990
Secondary plant heat rate	Btu kwh	19,000
Primary plant heat rate	Btu kwh	19,100

Primary system

Number of loops		1
Number of coolant pumps		2 (1 reserve)
Reactor inlet temperature	°F	428
Reactor outlet temperature	°F	448
Operating pressure	psia	1,200
Coolant flow	10^6 lb/hr	1.62

Secondary system

Steam generator inlet temperature	°F	256
Steam generator outlet temperature	°F	386
Steam generation rate	lb/hr	36,585
Full load pressure	psia	213
Turbine throttle pressure	psia	213
Full load throttle flow	lb/hr	34,570
Extraction pressures (1)	psia	31.6
Extraction flow (1)	lb/hr	3,030
Turbine back-pressure	in. hg. abs	2.4
Full load condenser flow	lb/hr	31,540
No. of condensate pumps		2 (1 reserve)
No. of feedwater heaters		1

SM-1 DATA SHEET (cont'd)

Secondary system (cont'd)

No. of boiler feed pumps		3 (2 reserve)
Generator rating		
Power output	kw	2,005
Power factor		0.8
Kva rating	kva	2,500
Voltage	volts	4,160

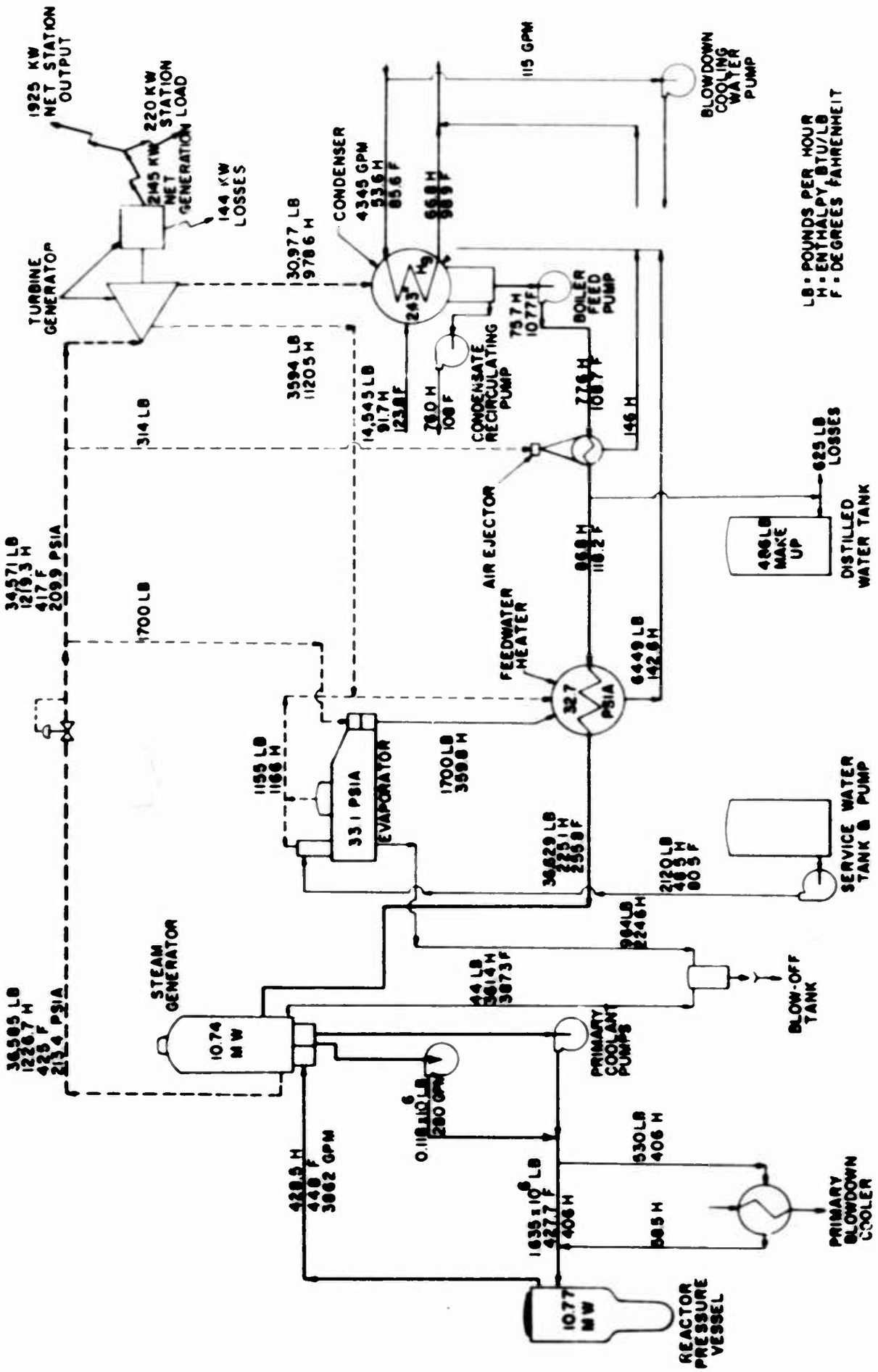

Figure 22. SM-1 flow diagram

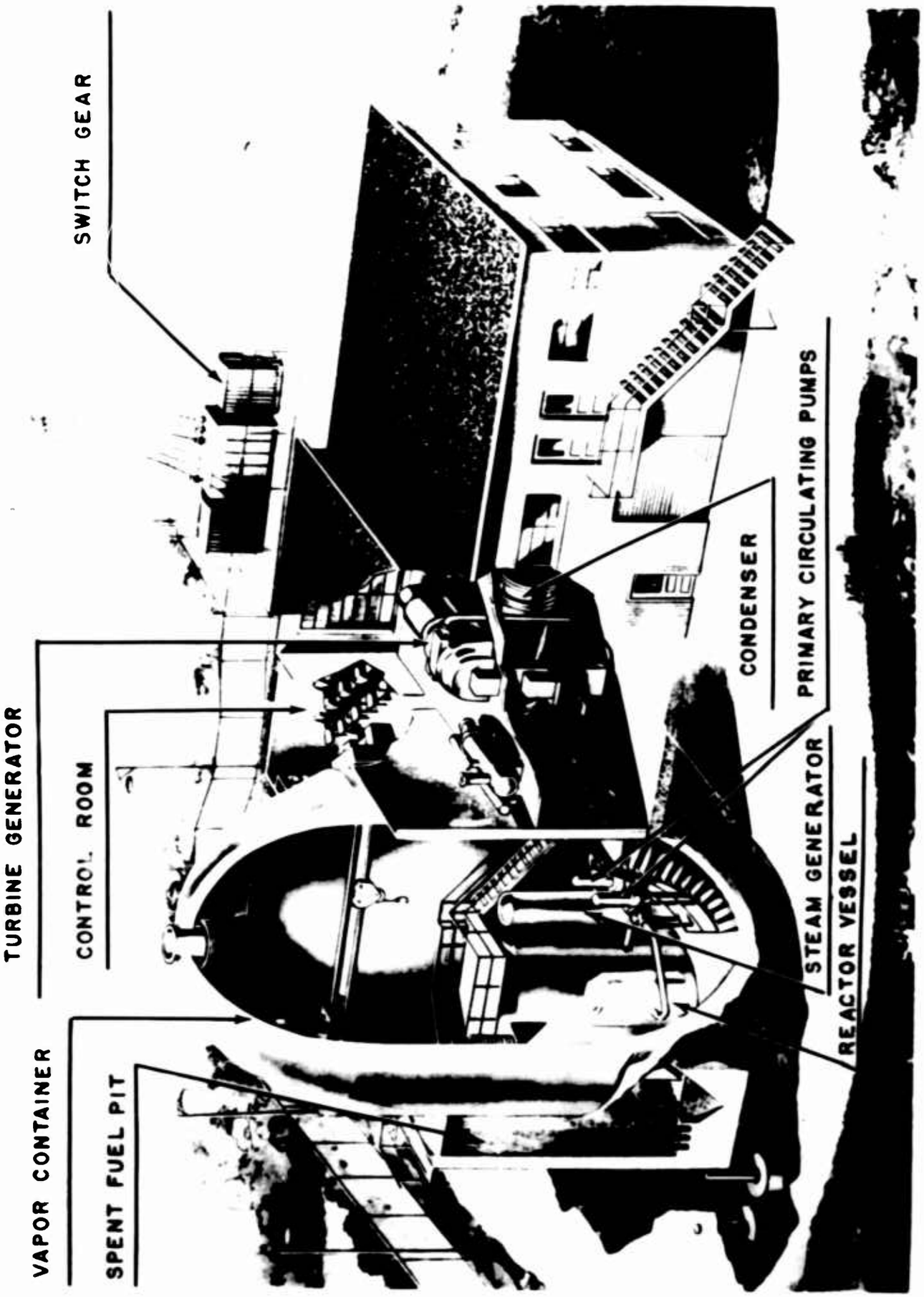

Figure 23. SM-1 nuclear power plant

reactor core, primary coolant pumps, tube side of the steam generator, and pressurizer. These components are connected by the primary coolant piping system which contains the necessary instrumentation to transmit flow, pressure, and temperature data to the control room. The high pressure/high temperature portion of the system is enclosed in a vaportight pressure vessel.

The water in the primary system is maintained at 1,200 psia to preclude boiling in the reactor. This water enters the reactor at 427.7°F and leaves at 448°F when operation is at full load. The electric heaters in the pressurizer maintain primary system pressure at 1,200 psia by keeping the pressurizer water at 568°F.

The primary system water is circulated through the reactor and steam generator at a rate of 2,860 gpm by either of two primary coolant pumps. These pumps are of the canned motor type to provide zero seal leakage at the pump shaft. The motor windings are indirectly cooled by condensate cooling water circulating through coils located in the stator.

The two-way valve or Y-valve is a specially designed unit which connects the outlets of the two primary coolant pumps to the primary piping system. This valve automatically permits flow from whichever pump is operating. It also permits a back flow estimated at 5 percent through the inoperative pump to keep it at operating temperature. This avoids thermal shock to the inoperative pump when it is placed in operation and eliminates the possibility of a slug of relatively cold water entering the reactor core from the inoperative leg when this pump is started.

The steam generator is the vertical-type heat exchanger with a bolted head located on the bottom end to enclose the tube ends. It has a U-tube bundle of stainless steel type 304 through which the primary coolant is circulated. On the shell side of the tubes a shroud divides the tubes into a vaporizer section and a superheater section. Feedwater enters the shell through a 2 1/2-inch pipe connection in the side of the generator, mixes with the fluid around the shroud, and flows down and under the shroud into the vaporizer section. Heat transferred through the tube walls from the primary coolant vaporizes the feedwater. The vapor flows upward through an external centrifugal moisture separator. A dip tube returns the separated

moisture to the vaporizer section. The dry steam then flows through the superheater section. The superheated steam flows under the superheater shroud and out of the steam generator through an 8-inch pipe outlet. A 1-inch drain connection at the bottom of the superheater section provided to remove any condensate that may collect in the superheater

(1) Reactor vessel

The reactor vessel contains the active core, its supporting structure, and thermal shielding. It consists basically of a cylindrical vessel 47 1/2 inches inside diameter, approximately 5 1/2 feet long, with a 22-inch inside-diameter extension approximately 4 feet long on the bottom. The latter part of the structure houses the control rod racks and their associated pinions and support structures. Wall thicknesses are 2 3/4 and 1 1/2 inches total, respectively.

The lower end of the vessel is closed by welding an ellipsoidal head. The upper end of the vessel is closed by a bolted and gasketed dished cover 2 3/4 inches thick. Total height including cover is 13 feet 6 inches. The opening at the upper end of the structure is 28 inches in diameter to permit insertion of the fully assembled core structure.

Primary water enters and leaves the vessel by two stainless steel nozzles located above the core and near the top of the large cylindrical section. Seven tubes penetrate the smaller-diameter cylindrical lower section at right angles to permit connection of the control rod drives. A mounting flange ties these tubes together 41 inches from the centerline of the vessel. The seals and drive mechanisms are bolted to this flange.

Structural support for the pressure vessel is by means of a ring attached to the outside diameter of the cylindrical section just below the inlet and outlet pipes. This ring rests on a support ring welded to the inner steel shielding ring which in turn rests on a concrete structure in the bottom of the vapor container.

The pressure shell and control rod extension is surrounded by thermal insulation 3 5/8 inches thick, which in turn is contained in a watertight stainless steel shell. Additional insulation is applied to the

removable cover at the top of the pressure shell. Provisions are made inside the pressure shell for support of the core structure support and thermal shield which also serves as a flow divider to direct cooling water flow to the core.

(2) Reactor core

The SM-1 core consists of a 7 x 7 array of fixed and control rod fuel elements with the four corner elements missing. The core consists of 38 fixed fuel elements and seven control rod assemblies. The fuel elements contain uranium highly enriched in the U-235 isotope in the form of UO_2. The fuel elements consist of fuel plates containing a dispersion of UO_2 and B_4C in a stainless steel matrix clad with stainless steel. The fixed fuel plates are arranged in subassemblies containing 18 fuel plates brazed into side plates. The control rods consist of a fuel element and absorber section inserted in a tube in such a way that insertion of the absorber section displaces a fuel element. The control rod fuel elements consist of 16 fuel plates per element.

The core support structure consists of an upper mounting flange, upper and lower grid plates, a skirt, four tie rods, pinion bearing support carrier and seven pinion bearing supports. The upper grid plate, in the form of four hinged doors, and the lower grid plate locate, orient and hold the stationary fuel elements. The upper grid plate also provides the upper guides for the control rods. The skirt, which encloses the entire core, is sandwiched between the upper mounting flange and the lower grid plate. The photoneutron source is mounted on the skirt.

The upper mounting flange, lower grid plate and pinion bearing support carrier are fastened together by four tie rods. Bolted to the carrier are the seven pinion bearing supports. The upper part of these supports provides a dashpot cylinder for decelerating the control rod during scram.

The complete core support structure is assembled in the shop and lowered through the upper vessel opening and bolted in place. It requires no additional adjustments after it has been set in the reactor vessel.

(3) Pressurizer

The pressurizer maintains the necessary primary system pressure to prevent boiling in the reactor. It is located inside the vapor container, and consists of a 25-cubic-foot-capacity, carbon-steel, spherical steam dome welded atop a 16-inch inside-diameter, carbon-steel vertical cylinder. The inside diameter of the dome is 45 inches and its wall thickness is 1 3/8 inches. The bottom of the cylinder is closed off by a 1-inch-thick stainless steel disc backed by a 4 1/8-inch carbon steel flange. The joint is sealed by an octagonal-cross-section, stainless steel ring gasket. Mounted on the disc are 30 electrical heaters, each rated at 3 1/3 kw. The elements are wired in parallel in groups of three, each group having a rating of 10 kw. The heaters are surrounded by a stainless steel baffle. The heater units, as well as the inside surfaces of the pressurizer, are clad with stainless steel.

A 4-inch nominal-diameter pipe interconnects the pressurizer and the primary coolant line. The connecting pipe penetrates the pressurizer near the bottom of its cylindrical section. Pressure produced in the steam dome of the pressurizer is exerted on the primary system through the connecting pipe.

Two steel rings welded to the cylindrical section support the unit. The entire unit and the connecting pipe are surrounded by 4 inches of thermal insulation. A pressure relief valve, mounted on top of the dome, opens at 1,500 psia to the inside of the vapor container to protect the system from overpressure.

During full-load operation, the heater control system responds to pressure changes to restore the rated pressure. At rated pressure conditions, a water temperature of 567.2^{o}F will exist within the pressurizer in equilibrium with the steam at the rated pressure of 1,200 psia.

A drop in primary coolant temperature because of an increase in system load causes a contraction in volume of the water in the system, which lowers the level in the pressurizer. The steam pressure in the dome will drop and some of the water will flash into steam. The pressurizer heaters will automatically come on and evaporate additional water to restore

normal operating pressure. The primary makeup system will automatically restore the normal water level. An increase in primary coolant temperature caused by a decrease in system load expands the volume of the water in the system, compressing the steam in the dome and raising its pressure.

(4) Primary coolant pumps

One of two "canned" motor pumps circulates the primary coolant through the primary system. They are hermetically sealed motor-pump units. The impeller mounted on the rotor shaft is of the mixed flow design. The rotor and stator of the pump are enclosed in leaktight Inconel jackets. When the primary system is filled, the pump motors are vented to the atmosphere, permitting primary fluid to fill the motor cavity between the canned rotor and the canned stator. When the system is full, the vents are closed and the fluid in the cavity is circulated within the cavity by an auxiliary impeller mounted on the rotor shaft. Circulation of this water cools motor bearings and removes heat generated by electrical losses in the stator and rotor. The heat removed by this cooling water is in turn removed by passing through coils in the motor cavity. These coils have a water jacket surrounding them through which condensate from the secondary system passes and carries off heat losses of the motor. Between the motor and the pump impeller is a thermal shield, which is basically a labyrinth seal, and a still water space, which minimizes heat transfer between the primary fluid flowing through the impeller and the motor-cavity cooling water.

One pump is inactive, and serves as a standby unit in the event of pump failure or power failure on one bus. The pumps are powered from separate 460-volt station service busses to ensure continuous operation in the event of the failure of one bus.

A certain amount of primary coolant is recirculated through the inactive pump to maintain the water temperature in the pump at no more that 10°F less than the active pump water temperature.

Performance data

Rated power, electrical, kw	33
Hydraulic power, at 4,000 gpm, hp	
Hot	23.5
Cold	28.4
Pump operating head, ft H_2O	28
Full-load operating temperature at suction, ^oF	431.6
Cooling water temperature, from primary coolant pumps, ^oF	135
Primary coolant pump temperature, ^oF	135

(5) Steam generator

The steam generator, which links the primary and secondary systems, is located inside the vapor container. It is essentially a shell and tube heat exchanger, receiving primary coolant from the reactor. The primary coolant circulates through the tubes to produce and superheat steam in the shell for the secondary system.

The shell is a vertical steel cylinder, 45 5/8 inches in diameter and 13/16 inch thick, internally clad with 1/8-inch stainless steel. It is closed at the top by an ellipsoidal head with a 16-inch diameter weld cap. A channel, welded to the bottom of the cylinder, provides primary coolant inlet and outlet connections and support for the tube sheet. The channel is closed with a 43-inch-diameter cover, 6 7/8 inches thick, bolted in place with twenty-six 2 1/4-inch alloy steel studs. The joint is sealed with a stainless steel ring gasket. The overall height of the steam generator is 16 feet 7 5/8 inches. The entire unit, as well as its inlet and outlet pipes, is covered with 4 inches of thermal insulation. A large support ring is welded to the shell to support the unit.

The channel is divided by a 1/2-inch stainless steel partition which directs primary coolant to the tube inlets and prevents mixing of inlet coolant (450°F) with outlet coolant (431.6^{o}F). A 1/4-inch stainless steel baffle divides the shell into two parts, a vaporizer section and a superheater section.

The stainless steel tubes, 3/4 inch in outside diameter and with a wall thickness of 0.065 inch, are arranged on a 1-inch triangular pitch in the vaporizer and in the superheater sections. The tubes are U-shaped to provide double-pass heat exchange and simplified construction to allow for tube expansion. There are 326 U-tubes in the vaporizer section and 44 U-tubes in the superheater section. The array of tubes is surrounded by a stainless steel cylindrical shroud 10 feet 2 inches high in the superheat region and 4 feet 10 inches high in the vaporizer section. In the vaporizer section, the shroud increases natural convection circulation of water by separating the hot leg from the cold leg of the unit. Horizontal baffles direct the flow through the tube bundle.

Feedwater enters the shell through a 2 1/2-inch pipe connection in the side of the generator, mixes with the fluid around the shroud, and flows down and under the shroud into the vaporizer section. Heat transferred through the tube walls from the primary coolant vaporizes the feedwater. The vapor flows upward through an external centrifugal moisture separator. A dip tube returns the separated moisture to the vaporizer section. The steam flows through the moisture separator and down through the superheater section of the steam generator. Substantially dry steam enters the superheater section. The superheated steam flows under the superheater shroud and out of the steam generator through an 8-inch pipe outlet.

A 2-inch pipe outlet discharges blowdown from the bottom of the shell through a cooler to the steam generator blowoff tank in order to reduce the impurity content of the secondary fluid. An ejector, operated on river water from blowdown cooling water pumps, is connected across the blowdown line to enable the operator to drain the shell at shutdown. A radiation monitor and a conductivity cell continuously monitor the blowdown.

A 1-inch drain connection at the bottom of the superheater section is provided to remove the condensate that may collect in this section.

Performance data

Operating pressures

Tube side, psia	1,200
Shell side, full load, psia	200
Shell side, no load, psia	422

Design pressure

Tube side, psia	1,500
Shell side, psia	500

Operating temperatures

Primary coolant inlet, full load, ^{o}F	450.0
Primary coolant outlet, full load, ^{o}F	431.6
Feedwater inlet, ^{o}F	246.1
Steam outlet, full load, ^{o}F	407.0
Steam outlet, no load, ^{o}F	450.0

Design temperatures

Tube side, ^{o}F	650.0
Shell side, ^{o}F	650.0

Operating flow rates

Steam outlet, full load, lb/hr	34,070.0
Feedwater inlet, full load, lb/hr	34,270.0
Feedwater inlet, full load, gpm	72.4
Blowdown, full load, gpm	200.0
Blowdown, full load, gpm	0.42
Heat transferred, full load, Btu/hr	34.1×10^{6}

b. Secondary system

The principal components of the secondary system are as follows: shell side of the steam generator, turbine, generator, condenser, air ejector, boiler feed pumps, feedwater heaters, and evaporator and preheater.

Steam is generated in the steam generator at a rate of 36,585 lb/hr with a pressure of 213 psia and a temperature of 425°F. The exhaust steam passes directly to the condenser shell where it condenses and collects in the hotwell for re-use.

A minimum flow line at the boiler feed pump discharge prevents operating the pump at no flow. A recirculating line downstream from the

air-ejector aftercondenser provides cooling water from the ejector condensers at low flow or no flow of feedwater to the steam generator. The minimum flow line and recirculating line flow is returned to the hotwell. Steam at 31.6 psia is automatically extracted from the third stage of the turbine to supply heat to the feedwater heater in which case the extraction steam line check valve automatically closes to prevent the flow of evaporator exhaust steam to the turbine.

A continuous blowdown is used to reduce the impurities of the water in the steam generator. The blowdown rate is 200 lb/hr (about 0.42 gpm) and is manually controlled. The blowdown is cooled, then continuously monitored for radioactivity and discharged to the seal pit. In case of excessive radioactivity the blowdown is manually diverted to the hot waste tank.

Instrumentation is provided to indicate and transmit to the control room temperature, flow, pressure and conductivity of the boiler feedwater and steam. Automatic water-level controllers are provided for the hotwell and steam generator.

(1) Steam generator

For description, see the primary system section.

(2) Steam turbine

Steam leaves the steam generator, passes through a pneumatically operated pressure control valve, and is admitted to the turbine through a manually controlled, hydraulically operated throttle valve. The steam passes through the governor throttles, expands through the turbine nozzles, passes through eight impulse stages, and is exhausted to the condenser. Steam for the feedwater heater is bled off after the third stage of the turbine.

The turbine is equipped with an oil system to provide hydraulic oil for speed control and load limit and for the turbine throttle valve, and to provide lubricating oil for the turbine bearings and governor. Oil is circulated by two of four oil pumps. When the turbine is at or near rated speed, a pump, driven by reduction gearing on the turbine shaft, operates the oil system with the aid of a small pump driven off of the turbine shaft. Two auxiliary pumps, one motor driven and one turbine driven, serve as standby units. Also, one

of these auxiliary pumps is used when starting or shutting down the turbine. A shell and tube heat exchanger cools the lubricating oil with condenser circulating water. Automatic devices within the system maintain the proper range of pressure for control purposes and switch over to a standby pump automatically when necessary.

Two pressure control valves in parallel in the main steam line leading to the turbine protect the system from excessive pressure. One of these operates over a low flow range for startup and shutdown; the other operates over a high flow range for routine operation. Both valves are of the air-to-open, spring-return type and also function as trip valves when actuated by vapor-container pressure switches. Each valve is equipped with an air pressure regulator to maintain constant pneumatic control pressure to the valve. Each is equipped with a range-setting positioner. A single pressure controller regulates both valves. As steam pressure downstream of the control valve varies, the controller acts to vary the air supply to the valves and adjusts the amount of throttling accordingly to maintain constant pressure.

The turbine throttle valve is used as a positive seating valve in the closed position to prevent steam from entering the turbine; it permits manually controlled throttling of the steam when starting the turbine and bringing it up to speed; it acts as a quick-closing device to shut off steam to the turbine when actuated by the turbine overspeed trip.

The turbine control system is composed of two main control elements: a double-relay hydraulic speed-control mechanism, and a load-limiting and inlet-pressure-control system, both of which actuate a governing-valve operating mechanism.

The speed control system functions to detect any change from set speed and to position the governing valves, through the governing-valve operating mechanism, to increase or decrease the steam flow to the turbine nozzles to maintain the set speed. A flyweight speed governor, geared to the turbine shaft, adjusts a pilot valve which controls the hydraulic pressure to a primary operating cylinder in the governing-valve operating mechanism. The primary operating cylinder piston adjusts a secondary pilot valve through

connecting linkage, which controls the hydraulic oil pressure to a secondary operating cylinder. The secondary operating cylinder piston positions the governing valves, through connecting linkage, to increase or decrease the steam flow into the turbine. Oil is supplied at constant pressure to the hydraulic system by the turbine oil system.

The speed of the turbine can be varied, within limits set by fixed high- and low-speed stops on the speed control mechanism. The speed control mechanism can be adjusted at the turbine with the speed-changing hand nut or from the control room through the motor-operated speed changer.

The maximum load carried by the turbine can be set at any point within the load rating of the unit. The load limiting mechanism can be adjusted at the turbine with a hand nut or from the control room through the motor-operated load-limiting device. With the speed control mechanism set at its high-speed stop, the positioner moves a load-limit pilot valve, through connecting linkage, to control the pressure in the primary operating cylinder of the governing-valve operating mechanism and thus position the governing valves to admit more or less steam to the turbine. This device will limit the maximum load carried by the turbine.

Inlet pressure control is obtained by means of an air motor which positions the load-limit pilot valve to control oil pressure in the primary cylinder and thus adjust the governing valves. The air motor receives an air signal from a pneumatic controller which senses inlet steam pressure. When this pressure falls below the controller setting (145 psig), the air motor repositions the load-limit pilot valve, through connecting linkage, to decrease the load

To protect the turbine in the event of overspeed resulting from failure of the speed control system, an independently operated overspeed governor and emergency relay are provided for immediate and positive closing of the throttle valve to shut down the turbine. The relay is also adapted for use as a manual tripping device for shutting down the turbine. The relay incorporates a mechanical linkage which, when actuated by the overspeed governor, by the remote generator differential relay trip, by the ground overcurrent relay, by the reactor scram circuit, or by the manual trip

lever, opens a spring-loaded dump valve in the oil pressure line to the throttle valve. This relieves the oil pressure on the pilot valve piston which in turn relieves the oil pressure on the hydraulic piston, and the throttle valve closes. This action also actuates an air valve which closes the extraction line non-return valve.

Performance data (normal full load)

Rated generated power, at 0.8 pf, kw	2,000
Maximum generated power, at 1.0 pf, kw	2,500
Turbine rated speed, full load, rpm	5,489
Turbine speed, no load, rpm	5,700
Speed regulation, %	3.85
Governor high speed stop, rpm	5,820
Governor low speed stop, rpm	5,215
Tripping speed, rpm	6,050
Inlet steam pressure, at throttle, psig	175
Low initial pressure regulator setting, minimum, psig	145
Shaft seal steam pressure, psig	2-5
Feedwater heater bleed pressure, psig	16.9
Exhaust pressure, in. Hg absolute	2.5
Exhaust casing sentinel valve setting, psig	10
Inlet steam temperature, °F	404
Oil pump discharge pressure, at 130°F, psig	65
Bearing oil pressure, at 130°F, psig	10+2
Motor-driven auxiliary oil pump pressure switch	
Close at pressure, psig	49
Opens at pressure, psig	60
Turbine-driven auxiliary oil pump oil pressure regulator setting, psig	45
Oil pressure, at reduction gear, psig	10
Oil temperature	
Minimum before starting, °F	70
Minimum operating, °F	130
Normal, at bearings, °F	140-150
Maximum, at bearings, °F	175
Leaving cooler, °F	110-115
Air temperature, to generator	
Normal, °F	95
°C	35
Minimum, °F	86
°C	30
Maximum, °F	104
°C	40

(3) Generator and exciter

The generator is a six-pole AC machine. Its field excitation is

supplied by a four-pole DC compound exciter operated on the same shaft as the generator. The generator is Y-connected, with grounded neutral, so as to deliver a phase sequence A-B-C. The generator is coupled to the turbine through reduction gearing which reduces turbine shaft speed in an overall gear ratio of 4.57/1. The reduction gear lubrication is supplied by the turbine oil system. The generator and exciter shaft bearings are oil, ring type, and self-lubricating.

A voltage regulator, in the shunt field circuit of the exciter, automatically controls the generated voltage by regulating the generator field excitation. It is essentially an automatically controlled exciter field rheostat. A manually controlled field rheostat, situated on the electrical section of the control panel, is provided for startup, shutdown control if the regulator is out of service, and to compensate for large variations of voltage which would occur with large changes in load.

The generator is cooled by circulation of air through a closed circuit from its housing through the shell of an air cooler and return. Condenser circulating water from the cooling water booster pumps is passed through the tubes of the cooler. The cooled air is returned to the generator.

Performance data

Generator rated power output at 0.8 pf, kw	2,000
Generated line voltage at full load, volt	4,160
Generated line current at full load, amp	347
Generated speed	
At full load, rpm	1,200
At no load, rpm	1,247
Generator frequency at rated speed, cps	60
Generator air temperature	
Minimum permissible, ^{o}C	30
^{o}F	86
Normal operating, ^{o}C	35
^{o}F	95
Maximum permissible, ^{o}C	40
^{o}F	104
Exciter rated power output, kw	15
Exciter rated terminal voltage, volt	125
Excitation current, rated, amp	120

(4) Condenser and air ejector

The secondary-system turbine exhaust steam is condensed in a

horizontal, shell-and-tube, double-pass, divided-flow condenser which is situated on the ground floor level directly below the turbine exhaust. A high degree of vacuum is maintained in the condenser shell by a two-stage, twin-element air ejector which is described below. The condenser converts the exhaust steam of the turbine to a liquid which, together with makeup water from the evaporator, is returned to the steam generator as feedwater. In addition, the vacuum of the condenser provides a low back pressure on the turbine, increasing the expansion of steam in the turbine and raising the efficiency of the secondary system.

The shell of the condenser is divided into two sections, each with a bank of tubes. Thus, half the condenser may be shut down for cleaning or repairs while the remaining half carries the condensing load.

The condensate, which collects in the hotwell of the condenser, supplies the steam generator feedwater and cooling water for the primary coolant pumps and the reactor cooling coils. Condensate is also used to supply makeup water for the primary system.

In addition to the main turbine exhaust, the condenser load includes the following:

(a) Feedwater heater condensate

(b) Air ejector condensate

(c) Turbine steam seal leak-off

(d) Condensate cooling water return

(e) Feedwater recirculation (for control of air-ejector temperature differential)

(f) Turbine-driven boiler feed pump exhaust (when operating)

(g) At shutdown, steam dump from steam generator

The condenser shell is a 58-inch-inside-diameter cylinder, 14 feet 2 1/8 inches long, fabricated of 1/2-inch-thick copper-bearing steel plate. A built-up turbine-exhaust flange connection of the same material tops the shell. A rectangular reservoir, the hotwell, protrudes from the bottom of the shell. The hotwell is equipped with staggered trays which

cascade the condensate into the well, aiding in removal of air. Naval brass tube sheets, 1 inch thick, are bolted in place at each end of the shell. The sheets support the 936 7/8-inch-outside-diameter, 18-gage, aluminum-brass tubes through which condenser circulating water passes. Three plates, equally spaced within the shell, also support the 14-foot 2 1/8-inch-long tubes. The tubes are roller-expanded, belled, and tin-sweated to the tube sheet at the inlet and are roller-expanded, and tin-sweated to the tube sheet at the outlet end. Two sections of tubes are located on either side of the shell behind air baffles and serve to cool and demoisturize the air-rich vapor which is drawn off at these points by the air ejector. Water boxes, bolted over the tube sheets at each end of the shell, direct the circulating water in the desired flow pattern. The condenser is supported from the turbine exhaust flange.

Vents are provided in each water box for the removal of trapped air when starting condenser operation. A vent in the shell allows air to escape from the shell when subjecting it to a water test prior to startup. Drains in both water boxes and the shell permit removal of water at shutdown.

Air and other noncondensable gases are removed from the condenser by a two-stage, twin-element, steam-jet air ejector of shell-and-tube construction. A mixture of air and vapor is drawn from the condenser shell by the suction of a steam jet nozzle. Operating steam and moisture from the air are condensed in the first-stage condenser (intercondenser) by the passage of feedwater through the intercondenser tubes. The air in the first stage shell is drawn, by another steam jet, into the second-stage condenser (aftercondenser) where it is compressed to a pressure of approximately 32 inches Hg for discharge to the atmosphere after the condensation of operating steam. Steam at 190 psia and 404°F is bled from the main steam line, throttled to 150 psig by a pressure reducing valve, and then supplied to the jet nozzles. The steam mixes with the vapor drawn from the condenser and is compressed by passage through a diffuser directly downstream of the nozzle. Both stages operate in a similar manner, the first stage drawing vapor from the condenser shell, and the second stage drawing vapor from the first-stage intercondenser shell. The condensate from each stage is returned to the condenser hotwell through ballfloat drain regulators. The condensation

of vapor in the air-ejector shells also serves to heat the feedwater flowing through the tubes.

Each stage of the air ejector is equipped with two nozzle-diffuser elements. During normal operation, only one of these is used on each stage, the other serving as a standby. Both may be used, however, for startup of the condenser when a heavy load of air needs to be evacuated or in an emergency to counteract an air leak into the system until it can be repaired.

The intercondenser and aftercondenser are similar in construction. Each consists of a 10-inch-inside-diameter steel shell. Two muntz metal tube sheets fitted in the ends of each shell support the tubes. Water boxes on each end of the shell cause the feedwater to make two passes through the tubes of each stage. Each shell contains sixty 5/8-inch-outside-diameter, 18-gage admiralty metal tubes which are 6 feet long. The nozzle and the diffuser are the converging-diverging type and made of stainless steel and cast iron, respectively. A vent and a drain are incorporated in each shell and each water box. A relief valve in each shell opens at 15 psig to protect the unit from overpressure.

A bourdon tube pressure gage gives local indication of the inlet steam pressure. An air meter in the atmospheric vent line gives a local reading of total load evacuated (air plus water vapor). A manually operated pressure reducing valve throttles the inlet steam to the desired pressure.

Performance data

Condenser

Shell vacuum, full load, in. Hg	27.5
Circulating water flow rate, gpm	4,260
Circulating water inlet temperature, °F	85
Circulating water outlet temperature, °F	98
Condensate temperature, °F	108.7
Hotwell capacity, cubic feet	40
Hotwell capacity, gallons	298.4
Steam condensed, full load, lb/hr	29,700
Heat rejected, full load, Btu/lb	900
Steam duty, total, Btu/hr	27.6×10^6

Performance data (cont'd)

Air ejector

Dry air evacuated, full load, lb/hr	18
Total load evacuated, air and water vapor, lb/hr	60
Design vacuum, in. Hg	29
Steam required for each two-stage element, full load, lb/hr	240
Operating steam pressure, psig	150
Cooling water flow rate, minimum, gpm	24

(5) Boiler feed pumps

Three vertical, 20-stage centrifugal pumps are provided to circulate feedwater from the condenser hotwell through the air-ejector tubes and the feedwater heater tubes to the steam generator.

The pumps are located in the ground floor work area and are connected in parallel for alternate operation. Under normal conditions, only one pump is in service; the other two serve as standby units.

Two of the pumps are driven by induction motors; the third is powered by a two-stage steam turbine. Ordinarily, one of the motor-driven pumps is in service, the turbine-driven pump being used only in the event of electrical power failure. The steam for the turbine is drawn from the main steam line. The turbine is controlled at 5 psig.

Bourdon tube pressure gages give local indication of feedwater inlet and outlet pressures and turbine steam inlet and exhaust pressures.

Performance data

Pump speed, rpm	3,550
Pump capacity, each gpm	75
Pump head, at 75 gpm	
ft H_2O	630
psig	273
Feedwater temperature, ^oF	108.7
Pump efficiency, %	66
Motor rated power, hp	20
Motor rated voltage, 30, volt	440

(6) Feedwater heater

Feedwater, pumped by one of the boiler feed pumps, is heated

in a shell and tube heat exchanger before delivery to the steam generator. The feedwater heater is located in the turbine room. The feedwater makes four passes through the heater tubes, where it is heated by steam bled from the turbine, vapor produced by the evaporator, and evaporator condensate in the heater shell. The collected condensate in the shell of the heater is returned to the condenser for re-use.

The heater shell consists of a 16-inch-outside-diameter cylinder of 3/8-inch-thick steel. The cylinder is capped with an ellipsoidal head welded at one end and a water box bolted on the other end. A 2 3/8-inch-thick steel tube sheet separates the water box from the shell cylinder. The overall length of the heater is 16 feet 9 inches.

Fifty-six U-tubes, of 5/8-inch outside diameter and 14-foot straight length, spaced on a 13/16-inch triangular pitch, together with the tube sheet, tie rods, endplates, support plates and baffles, constitute the removable tube bundle of the heater.

The heater is equipped with a liquid level gage glass. An automatic level controller actuates a level control valve to regulate the flow to the condenser. Two float-actuated switches sound an alarm in the control room if the level becomes excessively high or low. A safety valve on the shell is provided to protect the unit from excessive pressure. This valve will pass 12,270 lb/hr of saturated steam at operating pressure.

Performance data

Feedwater flow rate	
gpm	75
lb/hr	34,270
Feedwater inlet temperature, °F	116.2
Feedwater outlet temperature, °F	246.1
Steam inlet temperature, °F	256
Steam inlet pressure, psig	15.2
Shell pressure, psig	160
Shell design pressure, psig	450
Tube design temperature, °F	300

(7) Evaporator and preheater

Makeup water for the secondary system is supplied by distillation of service water in the evaporator, which is located in the turbine room.

Water drawn from the service water tank by the evaporator feed pump passes through the preheater, where it is heated and deaerated, and into the shell of the evaporator, where it is vaporized by double-pass flow of steam in the tubes. Steam for this purpose is bled from the main steam line. The vapor rises through a centrifugal separator atop the shell, where moisture is removed and returned to the shell. A portion of the vapor produced rises into the preheater to heat the incoming service water. The remainder is piped to the shell of the feedwater heater, condensed, and then is carried to the condenser hotwell for system use. Condensed steam from the evaporator tubes is also delivered to the feedwater heater shell. The vapor and condensate may be diverted to the condenser.

The evaporator shell consists of a 2-foot, 7 3/4-inch-outside-diameter cylinder of 3/8-inch steel. It is capped on one end with a welded spherical steel head. The opposite end tapers to an 18-inch outside diameter and is fitted with a flange to receive the fixed tube sheet and the steam chest. The steam chest is a partitioned, domed, cylindrical member bolted to the shell over the tube sheet. The partition directs the flow of steam in the desired path through the tubes. The overall length of the unit is 14 feet 8 inches. The removable tube bundle consists of thirty 3/4-inch-diameter Cu-Ni tubes, a floating tube sheet and head assembly, a fixed tube sheet with roller supports, support and gusset plates, spacer pipes, deflection straps, and turnbuckles.

The preheater is a cylindrical open-type heater which cascades incoming service water down a series of staggered trays. Vapor is admitted at the bottom of the heater and disperses through the cascading water, heating it and drawing off air. The air is vented at the top of the heater. The vapor condenses and mixes with the service water and both fall to a ring-shaped reservoir from which the fluid overflows a weir into the evaporator shell. A safety valve mounted atop the shell is set to open at 50 psig to protect the unit from excessive pressure.

Scale may be removed from the outside surfaces of the tubes by alternately heating them and shocking them with cold water. The cold water causes the deflection straps to contract, which in turn shortens the distance between the tube sheets, causing the tubes to bow outward. This sudden deflection cracks the brittle layer of scale from the tubes.

Connections for continuous and intermittent blowdown of shell water are made at the bottom of the shell and run to the steam generator blowoff tank. The continuous blowdown serves to limit the impurity content of the water and thus increases the purity of the vapor; the intermittent blowdown is used after a tube descaling operation to remove the accumulation of solids which results.

The evaporator shell is equipped with a level gage glass, a level controller which regulates the service water inlet rate, and high- and low-level alarm switches.

Service water for distillation is supplied to the evaporator by the evaporator feed pump. The pump is a centrifugal unit and draws from the service water tank. It is driven by an induction motor.

Service water for tube descaling is drawn from the service water main, under its own head, through a separate line.

Performance data

Vapor outlet pressure, psig	15.2
Vapor outlet temperature, °F	250
Normal steam inlet pressure, psig	175
Feed pump discharge pressure, psig	46
Distillate solids content, ppm	1
Total capacity, lb/hr	2,150
Preheater bleed, lb/hr	400
Net capacity, lb/hr	1,750
Normal full load capacity, lb/hr	1050

c. Electrical system

(1) General

A loop bus, connected to the SM-1 generator at one end and through the Engineering Research/Development Laboratory (ERDL) busses to the Virginia Electric Power Company (VEPCO) power system at the other, is the principal electrical power transfer system of the plant. It is a three-phase, three-wire system, supplied by a Y-connected alternator rated at 2,500 kva at 0.8 power factor and 4,160 volts. The generator field is supplied by a

15-kw, 125-volt DC exciter. Output power leaves the ring bus through a 4,160-volt overhead transmission line to the ERDL substation at which point a 2,500 kva, Y-delta transformer steps down the line voltage to 2,400 volts, and power is fed into the Fort Belvoir system through a 600-ampere, 2,400-volt breaker. The system is protected from overloading by relay-tripped air circuit breakers.

In the event of a short circuit in either 4,160-volt bus, breakers are tripped to isolate the bus from the rest of the system and the other bus carries the entire load. It is this provision of duplicate busses that gives rise to the "ring" construction.

The two feeders from the 4,160-volt ring bus feed power to two 300-kva delta-Y transformers which step down the voltage to 480 volts for use by station service equipment. Two 460-volt busses (there is a 20-volt drop in the line) supply such plant equipment as primary and secondary system feedwater and circulating water pump motors, pressurizer heaters, control-rod drive motors, ventilation and space- cooler fan motors, a DC rectifier, a DC battery-charging motor-generator set, control power supply, air supply compressor motors, and station lighting.

The system is protected from overloading and loss of power by relay-actuated air circuit breakers. If, for any reason, one of the station service feeders goes out, the other 460-volt bus is automatically connected so as to supply both 460-volt buses. In most cases, station service equipment is provided in duplicate, one at each 460-volt bus to further safeguard continuous operating. Each station service component is protected by an individual air circuit breaker.

A 125-volt DC distribution system supplies power to such equipment as switchgear relays, instruments and controls, annunciator, and emergency lights. The system receives power from a rectifier charger or a motor-generator set or both. These units are powered from the No. 1 460-volt bus. A 125-volt DC battery is connected in parallel with these sources to store energy for emergency use if AC power fails. The system is protected from overloads by air circuit breakers at each component.

(2) Emergency equipment

A DC power distribution system is incorporated in the plant to provide emergency lighting as well as to power instruments and provide operating power for the switchgear controls. The system, rated at 125 volts, can supply power to the 4,160-volt and 460-volt switchgear, to the 4,160-volt test cabinet, to the control room instrument power supply, to an inverter supplying emergency instrumentation power, to the laboratory for test purposes, to the instrument repair room for test purposes, to the compressed-air control-system solenoid valve power supply, to the annunciator (alarm and signal light) power supply, to a 400-cps motor-generator set which supplies the control-rod position-indicating system, and to emergency plant lights. The sustem receives power from a rectifier-charger and/or a motor-generator set, both powered from 460-volt bus No. 1. The rectifier has limited capacity compared to the other DC sources. A 60-cell, 125-volt DC battery connected in parallel with these sources stores energy from either or both for emergency use and peak momentary load periods.

The rectifier-charger is an electronic device which draws AC power from the bus and delivers DC power at a regulated constant voltage and variable current. It is a self-contained unit located on the north wall of the electrical equipment room. It is connected to the miscellaneous motor feeder of 460-volt bus No. 1 through a two-pole, fused safety switch.

The motor-generator set is located in the electrical equipment room and consists of a 7 1/2 hp motor which is connected directly to 460-volt bus No. 1 through an air circuit breaker and a 5-kw DC contactor. The generator is interlocked with the motor starter circuit and with the battery hood exhaust fan so that its circuit breaker cannot close unless both of the starters are energized.

The DC batteries consist of two racks of 30 cells each and are located in the electrical equipment room. The cells are connected to each other in series to add their individual average voltages of 2.15 volts to obtain a total average voltage of 129 volts.

A DC ground detector is provided for this system and indicates the magnitude of any grounds in the DC system.

d. Nuclear instrumentation

The SM-1 system of nuclear instrumentation and controls is fundamentally a conventional, vacuum-tube and relay system, employing standard a and conventional nuclear-channel functions, parts and components. In addition to the nuclear controls and instrumentation proper, a safety system of the same class of circuitry is provided. Into this system, information from both the nuclear channels and a number of process parameters is fed. When the value of any of these parameters exceeds prescribed limits in a dangerous direction, automatic actions are effected to guarantee the safety of reactor, plant, and personnel from excessive nuclear excursions, overheating, overpressuring, and too-low coolant flows.

The instrumentation system is designed so that any malfunction or failure of the instrumentation itself will be in the safe direction. Malfunction or failure of instrumentation equipment of prime importance to plant safety will cause the reactor to scram and will alarm. Malfunction of equipment of lesser importance will cause an alarm to sound so that corrective measures may be taken by the plant operator.

(1) Startup-range channels

Both startup-range channels are alike. Pulses taken from BF_3 (proportional) counters are preamplified in the vapor container. Final amplification is at the control-room nuclear panel. The shaped-pulse output of the linear amplifier is counted on a scaler (which also supplies high voltage to the BF_3 counters). The shaped output of the linear amplifier is taken through a log diode, further amplified; and the resulting count rate is both indicated and recorded as a current. A recorder interlock, set at a minimum count rate of 2 cps, ensures that neutrons are available before the initial pulling of the control rods.

(2) Intermediate-range channels

These channels are of the same ranges, with respect to reactor power level, but of different circuitry and purpose. Both operate from electrically adjusted, gamma-compensated ion chambers which receive their high-voltage supplies from a specially made chassis in the control room

nuclear panel. Beyond these points in common (which govern their ranges) the two channels are totally different. The gamma compensation is required and effective in only approximately the two lower decades of both these channels (corresponding roughly to 10 percent to 10^{-2} percent of full reactor power level).

(a) Linear channel

This channel operates through a range selector switch (a conventional rotary attenuator in principle) to achieve its linear nature. The signal, through the selected switch position, is first amplified, then both indicated and recorded. At the present time, the channel is used for no direct control function and controls only through an operator. However, an associated servo-controller is capable of controlling the reactor by adjustment of the control rod (c) position. Since, however, the SM-1 pressurized-water reactor has a very high negative-temperature coefficient, the coefficient (alone) is capable of controlling the reactor power level safety through all possible load transients above a very small power level. The servo-controller has been installed but is not being used in the SM-1. The primary function of the linear channel is to give the operator the only available wide-range source of linear information relative to the reactor power level.

(b) Log N and period channel

The two principal functions of this channel are to give the operator a wide-range source of information relative to reactor power level (not requiring deliberate range selection) and to provide period protection for the reactor.

The chamber current is taken through a log diode to extract the log of the signal, effectively compressing the signal range in a meaningful and predetermined manner. The log signal is both indicated and recorded.

A portion of the log signal developed is differentiated to determine period information, i.e., specifically a signal whose value is proportional to the rate of rise of drop-off of reactor power level which always follows a theoretically exponential curve. To check the accuracy of the period data derived, it is thus only necessary to track the 80-second decay curve of

neutron flux after a scram. (This curve may also be followed on down to source levels on the startup channels, when desired, as a further check on their accuracy--particularly in their upper-decade levels.) The extracted rate information is recorded on a period recorder and indicated on a meter.

Four interlocks operate from this channel: (1) in the "zero power" position of the reactor-mode switch, a recorder control scrams the reactor at a prescribed (but adjustable) power level; (2) the BF_3 counters on the startup channels are disconnected from their high-voltage supplies and grounded for protection; (3) the rods are prevented from further withdrawal after the reactor period is shorter than 10 seconds (positive); and (4) the reactor is scrammed when a period shorter than 3 seconds (positive) is attained. No negative-period interlocks are necessary for any known purpose.

(3) Power-range channels

These nuclear channels are connected to operate on a 2-out-of-3-coincidence type of redundancy basis to improve system reliability. This is to say, two out of three channels must agree that a scram is necessary before the scram is actually effected. All operate from noncompensated ion chambers on the theory that at all higher power levels the combined neutrons and prompt gammas (both of which are proportional to reactor power level) essentially "swamp out" all residual gammas. This is in contrast to the case of the startup channels and the first two decades of the intermediate channels, since residual gammas can (at various times) be very troublesome in the lowest six decades of operation.

However, in the power range of operation, the signal-to-noise ratio is very good and causes very few operational problems. Two scram speeds are provided by this circuitry--both a so-called "fast" scram and a "slow" scram.

This refers to the electronic speeds only--and, for most practical purposes, it is therefore substantially meaningless. The reason is that most of the scram delay is not in the electronic, but in the mechanical portion of the scram system. The latter is the sum of de-energization time of the clutches, their face-separation time intervals and sufficient rod-dropping

time to insert adequate negative reactivity into the reactor to ensure its quick shutdown (or scram).

The fast scrams, however, operate through the grid circuit of the clutch-holding safety-amplifier output tubes, whereas the slow scrams operate through the clutch power supplies. This effects a slight additional delay, primarily because of the electrical energy storage in these supplies. The nuclear parameters (power level and period) operate through the fast scram circuit; all nonnuclear parameters (including manual) operate through the slow scram circuit. The total delay rod-drop oscillographic tests indicate that the SM-1 rods will show perceptible motion in 50 to 70 msec after scram initiation.

5. SM-1A NUCLEAR POWER PLANT

The SM-1A was designed under a contract awarded to ALCO Products in July 1956. Construction was begun by Peter Kiewitt Sons' Company during June 1958 under the supervision of the US Army Engineer District, Alaska. Initial criticality was reached 13 March 1962 and the plant was accepted from the contractor on 15 June 1962.

The SM-1A has a 20.2-megawatt (thermal) core which produces 1,650 net kilowatts (electrical) and approximately 36,000 lbs/hr of steam for space heating. This plant output provides all but the peak power load demands for the US Army Alaska's Fort Greely, located 85 miles southeast of Fairbanks.

The reactor operates at a pressure of 1,200 psia and an outlet temperature of 443°F at full power. Two primary coolant pumps are provided in parallel, both of which have an output flow rate of 6,600 gpm. Primary coolant flow is from the reactor to the steam generator, where heat is transferred to the secondary (steam) system, through the coolant pump and back to the reactor inlet. This entire primary loop is installed in a vapor container.

The vapor container, essential in the SM-1A since it is located in a populated area, serves as a final barrier against the release of radioactive materials in the unlikely event of a serious accident in the reactor. The container is a hemispherical-topped cylindrical steel shell 40 feet 8 inches in diameter and 48 feet 6 inches high, enclosing a cylindrical concrete tank 35 feet in inside diameter and 45 feet 6 inches high. The 2 feet 10 inches between the outside of the concrete tank and the inside of the steel shell is water-filled. In addition to its shielding properties, this water shell provides a heat sink to cool vapors within the concrete tank in the event of a primary system rupture.

Since there is not a convenient surface water supply for condenser cooling, the SM-1A relies on water constantly recirculated through deep wells for steam condensation. This unique system, which requires water treatment to reduce hardness, has operated very satisfactorily to date.

a. Primary system

The primary system includes the reactor and reactor vessel with

SM-1A DATA SHEET

General

Net electrical output, 0.8 pf	kw	1,650
Auxiliary power	kw	350
Gross generator	kw	2,000
Space heat req's	kw	13,100
Reactor heat output	kw (th)	20,200
Equivalent efficiency	%	73
Electrical efficiency	%	23.2

Primary system

Number of loops		1
Number of coolant pumps		1 (1 reserve)
Reactor inlet temperature	^{o}F	423
Reactor outlet temperature	^{o}F	443
Operating pressure	psia	1,200
Coolant flow	10^6 lb/hr	3.705

Secondary system

Steam generator inlet temperature	^{o}F	
Steam generator outlet temperature	^{o}F	381
Steam generation rate	lb/hr	70,000
Full load pressure	psia	200
Turbine throttle pressure	psia	200
Full load throttle flow	lb/hr	70,000
Extraction pressures (1)	psia	80
Extraction flow (1)	lb/hr	36,000
Turbine back-pressure	in. hg. abs	2.5
Full load condenser flow	lb/hr	24,000
No. of condensate pumps		1 (1 reserve)
No. of feedwater heaters		0
No. of boiler feed pumps		1 (1 reserve)

SM-1A DATA SHEET (cont'd)

Secondary system (cont'd)

Generator rating		
Power output	kw	2,000
Power factor		0.8
Kva rating	kva	2,500
Voltage	volts	4,160

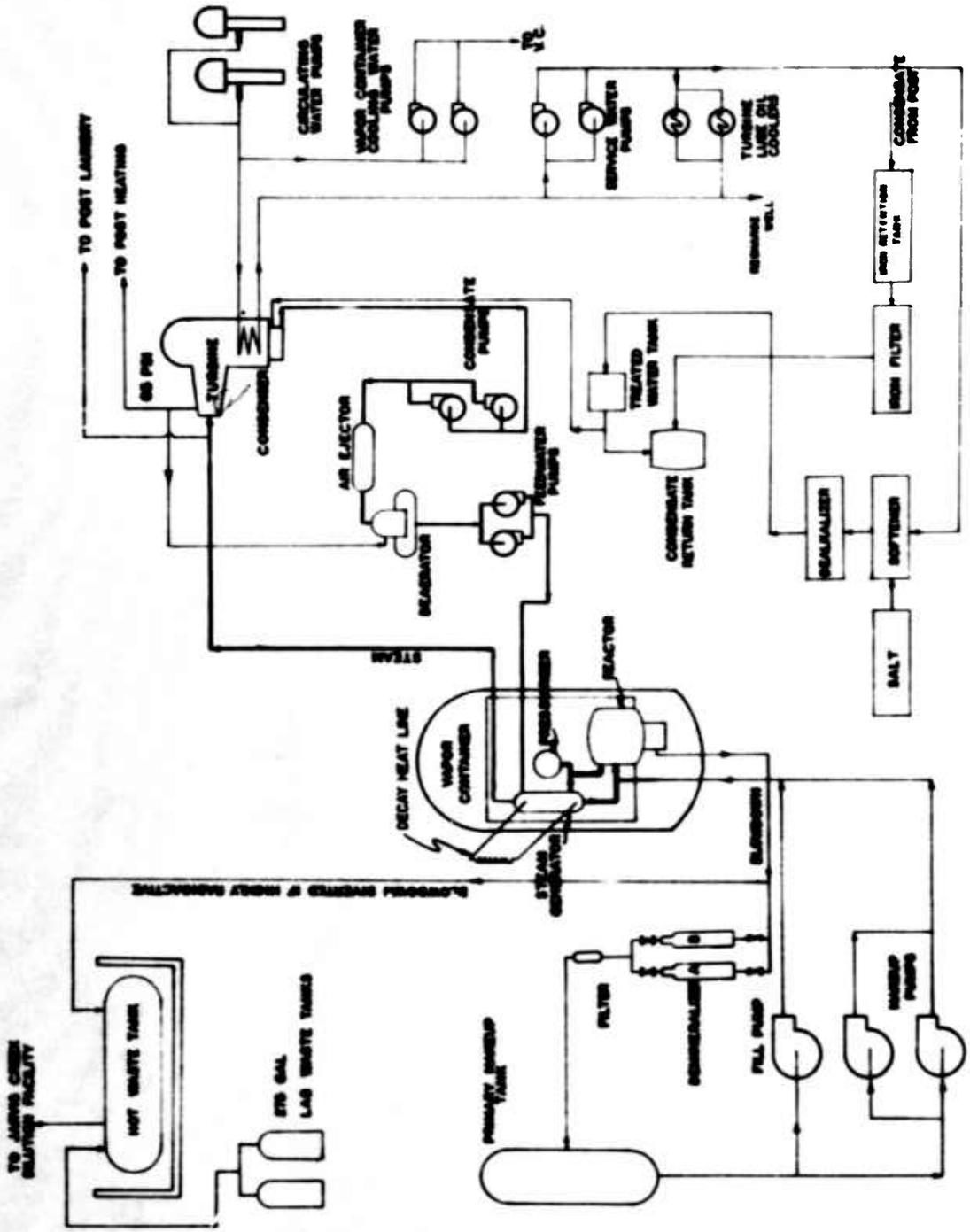

Figure 24. SM-1A flow diagram

control rods, two coolant circulating pumps, connecting piping with flow measuring tube and two-way valve, the tube portion of the steam generator, a pressurizer with 100 kw of electric heaters, and water purification and makeup system. The high-pressure, high-temperature portion of the system is enclosed in a vaportight container.

The water in the system is maintained at 1,200 psia to preclude boiling in the reactor. This water enters the reactor at 423°F and leaves at 443°F when operating at full load. The electric heaters in the pressurizer maintain pressure at 1,200 psia by keeping the pressurizer water at 567°F with steam above it. Overpressure protection is provided by a relief valve in the top of the pressurizer steam volume. The water level in the system is automatically controlled by means of the pressurizer level controller which actuates the controls to the makeup pump.

The primary system water is circulated through the reactor and steam generator at a rate of 6,600 gpm by one pump with a duplicate pump in reserve (100 percent standby). The pumps are of the canned motor type. The motor windings are water cooled and provided with an external safety trip to shut down the pump in case of failure of the cooling water supply. The pumps, with the exception of bearings and thrust shoes, are manufactured of 304 stainless steel.

The two-way swing valve is a specially designed unit which connects the outlets of the two primary pumps to the primary piping. This valve automatically permits flow from whichever pump may be in operation. It also permits back flow of about 5 percent of the primary flow through the inoperative pump if it is called upon to be placed in operation quickly. It also prevents a slug of relatively cold water entering the reactor core from the inoperative leg if this pump is started.

The steam generator is of the vertical type. It has a U-tube bundle of stainless steel through which primary water is circulated. Secondary water enters the shell side about halfway up on the steam generating section. It is converted to steam by contact with the tube bundle carrying the primary water. The steam passes from the free water surface in the steam generator through a centrifugal type of water separator.

The primary makeup water is fed into the system by the variable volume pump with its suction connected to the stainless steel primary water makeup tank. Blowdown of water from the primary system is controlled from the control room by means of a motor-operated valve. As the water is blown down, it first passes through a blowdown cooler, after which the pressure is reduced by passage through a pressure reducing valve. The water is then passed through a demineralizer and filter to the primary makeup tank for re-use.

(1) Reactor pressure vessel

The reactor core, including control rods and control-rod drive racks, is enclosed within a pressure vessel. This pressure vessel consists of a 45 1/2-inch inside-diameter cylindrical section enclosing the core itself, closed at the top by a bolted-on head, and at the bottom by a smaller-diameter extension. The vessel is constructed of carbon steel, type SA212, grade B. All joints are welded, radiographed and stress-relieved. All internal surfaces in contact with the primary water are clad with type 304 stainless steel 0.250-inch thick.

Structural support for the reactor vessel is provided by means of a ring attached to the outside diameter of the upper cylindrical section just below the inlet and outlet pipes. This ring rests on a support ring welded to the inner steel shielding ring, which in turn rests on the concrete in the bottom of the vapor container. Differential expansion of the pressure vessel with respect to the shell ring is provided for by keys and keyways so arranged as to permit radial sliding of one ring with respect to the other while still maintaining concentricity of the two. The entire vessel, including penetrations, is surrounded by 4 inches of thermal insulation which in turn is protected by a steel shell. Additional insulation is applied to the cover.

Support means for the core structure are provided inside the pressure vessel. The upper plate of the core structure is provided with keys and keyways permitting differential thermal expansion while maintaining concentricity. Thermal shielding is provided inside the vessel in the form of two stainless steel cylinders, each 2 inches thick, which reduce the thermal stress in the pressure shell resulting from gamma energy absorption. A

lower head is welded to the outer thermal shield cylinder to provide gamma attenuation primarily for the external concrete, since the pressure shell at this point is sufficiently far from the core as to require little gamma attenuation itself. The thermal shield assembly is supported inside the vessel in such a way as to provide for differential thermal expansions without introducing structural stresses into the pressure shell or the thermal shield itself.

(2) Reactor core

The design of the SM-1A reactor core is essentially unchanged from that of the SM-1. The design requirements of the SM-1A core differ from those of the SM-1 in that the power level is 20 Mw, and the core life a minimum of 1 year at an average load of 60 percent rated capacity (12Mw).

The SM-1A core contains 22.5 kg U-235 and 21.098 gr of B-10. The U-235 is in the form of fully enriched UO_2 and the B-10 in the form of B_4C. The UO_2 and B_4C are incorporated in a stainless steel matrix clad with stainless steel and fabricated into plates. The plates are brazed into side plates. Water passage between fuel plates is 0.133 inch.

The core is made up of 45 fuel elements, a 7 by 7 array with corners out. There are 38 fixed fuel elements and 7 control rod elements. Each fixed fuel element contains 515.16 gm of U-235 and 0.483 gm of B-10. Each control fuel element contains 417.76 gm of U-235 and 0.392 gm of B-10. The fixed elements and control rod elements contain 18 and 16 fuel plates, respectively, for a total of 796 plates in the core.

b. Secondary system

Steam formed in the steam generator within the vapor container is piped directly to the throttle valve of the steam turbine. The turbine is an automatic, controlled extraction machine which is designed to provide auxiliary steam at 65 psig to the post heating system and to generate 2,000 kilowatts of electrical power by means of a 1,200-rpm generator. The turbine, which operates at 5,490 rpm, drives the generator through a reduction gear.

Steam which passes through the turbine enters the condenser and is condensed by means of circulated well water. The condensate is pumped into

a deaerating type of contact heater which is also supplied with steam from the turbine extraction opening and which is used to heat the feedwater prior to its return to the steam generator. Feedwater for the steam generator is obtained at about 250°F from the deaerator storage tank. About a 10-minute supply of feedwater is provided in this storage tank and is available in the event that the supply of condensate to the deaerator is stopped for any reason.

Steam, which is extracted at 65 psig from the turbine and supplied to the post, is returned (minus that amount which is consumed by the post) as condensate at about 175°F. This condensate is mixed with the required amount of demineralized makeup from the post water system and is supplied directly to the deaerator. Thus, all feedwater to the steam generator must pass through the deaerator where it is heated to about 250°F and deaerated before its admission into the steam generator. The degree of heating of the feedwater is independent of the reactor load and thus precludes thermal shocks to the steam generator upon rapid system-load changes.

A three-element feedwater control system is provided for regulating the feedwater supply to the steam generator. Measurement of both steam and feedwater flow provide anticipatory action on the basic control of the steam-generator water level, thus ensuring close regulation. Feedwater and steam flow are recorded.

At full reactor power, steam is generated at 200 psia, dry and saturated. At minimum reactor power, steam will be generated at approximately 360 psia, dry and saturated. A relief valve is installed on the shell side of the steam generator to protect the secondary steam system against overpressure from any source which exceeds 500 psi.

Temperature, pressure, and steam flow recorders are installed between the steam generator and the turbine.

A 2-inch auxiliary line for feeding a steam turbine-driven boiler feed pump is taken off of the main steam line. This pump is provided for emergency circulation of feedwater through the steam generator in the event of electrical failure resulting in stoppage of the electrically driven pumps. Another 2-inch steam line supplies the condenser air ejectors and the emergency lubricating oil pump.

The secondary water is continuously degasified in the deaerator to maintain a maximum of 0.005 cc/liter oxygen in the steam generator feedwater. Chemical treatment is used to reduce the free oxygen to practically zero and to minimize corrosion.

Continuous blowdown of the steam generator at a rate of about 350 pounds of water per hour maintains the secondary system water in proper condition. This blowdown leads through a blowdown tank back to the condensate return tank. The steam and the blowdown leaving the steam generator are monitored continuously for activity as a check on any leakage of the primary water into the secondary system.

The condenser water is obtained from drilled wells and is circulated by deep-well-type pumps. This water is also used to provide cooling water for the generator air cooler and bearing oil cooler, and the vapor container. After circulating through the condenser and coolers this water is returned to underground storage by means of a return drilled well.

The electrical system is provided with a switchgear arrangement based on the packaged plant concept, so that the nuclear plant can operate independently of equipment in the existing oil-fired plant. The existing plant need only provide the startup power source. Provision will be made, however, for operation in parallel with generation in the existing plant. Under this mode of operation, auxiliary power supply reliability will be enhanced.

Auxiliaries of the primary and secondary systems obtain power from a "secondary selective" system operating at a nominal 480 volts. This arrangement is provided by a normally split bus in metal-clad drawout switchgear and standard motor control centers with each bus section fed by dry-type auxiliary transformers stepping down voltage from generator level. The transformers are sized to permit rated output operation of the plant with one transformer out of service, by closing the bus tie. The tie will close automatically on loss of an auxiliary transformer circuit.

All auxiliary pumps are provided with 100-percent standby; a standby pump will be supplied from the opposite bus section from that feeding the running pump. In addition, standby pumps, in general, are equipped with

automatic starting devices to guard against local mechanical or electrical trouble of the running pumps.

6. ML-1 NUCLEAR POWER PLANT

The ML-1 is a mobile, low-power, nuclear power plant capable of producing 500 kw(e) gross, 340 kw(e) net. This plant has the capability for acceptable performance under extreme cold and extreme hot weather conditions. The design conditions cover an ambient temperature range of -65°F to +100°F. The ML-1 can be installed and delivering rated power within 12 hours after arrival at an operating site. Relocation after operation requires a 24-hour delay after reactor shutdown for radiation decay.

The ML-1 is an engineering development model which was built by the Aerojet-General Corporation under contract with the AEC. It is presently undergoing tests and evaluation at the National Reactor Test Station (NRTS) at Idaho Falls, Idaho. The prototype of the first real field plant will be designated the ML-1A.

The primary circulating system of the ML-1 has one loop and makes one pass through the reactor core. The system includes the turbine-compressor set (with reduction gear), the alternator, the generator (with starting motor), the air-cooled precooler head dump (with fans), and the regenerative heat exchanger (recuperator). The 1,200°F gas coolant from the reactor expands in the turbine, cools as it passes through the low-pressure side of the recuperator, and cools further in the precooler, where the waste heat is rejected to the atmosphere. To complete the cycle, the gas coolant is compressed in the compressor, heated to about 800°F in the high-pressure side of the recuperator, and heated to 1,200°F in the reactor. The turbine drives the direct-coupled compressor and, through the reduction gearbox, the alternator.

The plant produces 2,400/4,160 volts, three-phase, 60-cycle power. The plant has automatic power level control and is designed to operate satisfactorily in paralles with other units of a similar rating. The system is capable of 50-cycle operation with a correspondingly reduced output.

The ML-1 is a highly mobile unit which is made up of the four main packages listed on the following page.

Package	Weight (lbs)	Dimensions (in)
1. Reactor skid	30,000	111 x 108 x 93
2. Power conversion skid	30,000	168 x 113 x 93
3. Control cab	5,000	145 x 82 x 81
4. Auxiliary package	12,000	

All four packages are air transportable separately on an Air Force C-124, C-130, or C-133. Also, the four packages can be transported by rail using a standard railroad flatcar. The ML-1 plant is transportable by truck, the packages being shipped in the following manner:

No. 1 and No. 2 (separately)	Army M-172 or M-172-A-1 trailer with M-52 truck
No. 3	Army M-35 2 1/2-ton cargo truck
No. 4	Army M-35 2 1/2-ton or M-55 5-ton cargo truck

The ML-1 nuclear power plant can operate either mounted on a trailer or off-loaded. The control cab is located approximately 500 feet from the power plant during operation. A seven-man operating crew can provide for continuous 24-hour power operation. Essential maintenance will be performed on a 30-day cycle; the plant, however, will operate on a single loading of nuclear fuel for 10,000 full power hours. The ML-1 is capable of operation without a continuous water supply. The initial quality of reactor shield water can be supplied by a standard 600-gph military water purification unit (included in the plant). Also included in the plant are all special purpose tools required for site installation, startup, shutdown, and normal maintenance.

As stated previously, the ML-1 is an engineering development model and for this reason, design changes are being made continuously. For the purpose of this report, the ML-1 design was assumed frozen in 1961.

a. Reactor skid

The ML-1 reactor uses a heterogeneous, water-moderated core of 61 fuel-bearing pressure tubes. The stainless steel pressure tubes are arranged in a bundle and are fastened to a tube sheet at either end. This tube bundle, together with the inlet (upper) and outlet (lower) plenum chambers, forms the reactor pressure vessel. The gas coolant, under a nominal 300-psi

ML-1 DATA SHEET

General

Net electrical output, 0.8 pf	kw	340
Auxiliary power	kw	60
Gross generator	kw	400
Reactor heat output	kw (th)	3,300
Equivalent efficiency	%	10.3
Turbine heat rate	Btu kwh	21,035
Primary plant heat rate	Btu kwh	28,337

Primary system

Number of loops		1
Number of coolant pumps		T-C set
Reactor inlet temperature	^{o}F	800
Reactor outlet temperature	^{o}F	1,200
Operating pressure	psia	310
Coolant flow	10^6 lb/hr	0.0896

Secondary system

Turbine throttle pressure	psia	285
Full load throttle flow	lb/hr	89,640
Turbine back-pressure	psia	119
Full load compressor flow	10^6 lb/hr	0.0918
No. of precoolers		1
No. of recuperators		1
Generator rating		
Power output	kw	400
Power factor		0.8
Kva rating	kva	500
Voltage	volts	2,400/ 4,160

ML-1 CYCLE CHARACTERISTICS AT VARIOUS AMBIENT TEMPERATURES

(NITROGEN FLUID INVENTORY 52 LB, CONSTANT)

PARAMETER	VALUE AT AMBIENT TEMPERATURES			
AMBIENT AIR TEMPERATURE, °F	-65	0	100	125
ELECTRICAL POWER OUTPUT, kw	368	368	340	297
REACTOR POWER, Mw THERMAL INTO NITROGEN FLUID	275	275	290	277
REACTOR & TURBINE FLOWRATE LB/SEC	251	251	249	247
VELOCITY THROUGH REACTOR, FT/SEC, AVG	106	106	156	155
COMPRESSOR FLOWRATE, LB/SEC	256	256	255	262
CONTROL BYPASS FLOW, PERCENT	10	10	10	10

STATE POINTS			AMBIENT TEMPERATURES °F			
			-65	0	100	125
REACTOR INLET,	A	P psia	288	288	310	313
		T °F	597	597	800	806
REACTOR OUTLET,	B	P	265	265	285	289
		T	990	990	1200	1200
TURBINE OUTLET,	C	P	96	96	119	124
		T	688	688	905	913
PRECOOLER INLET,	D	P	95	95	116	123
		T	348	348	462	500
COMPRESSOR INLET,	E	P	93	93	115	121
		T	24	24	118	157
COMPRESSOR OUTLET,	F	P	294	294	315	319
		T	255	255	354	390

POWER PLANT CYCLE CHARACTERISTICS

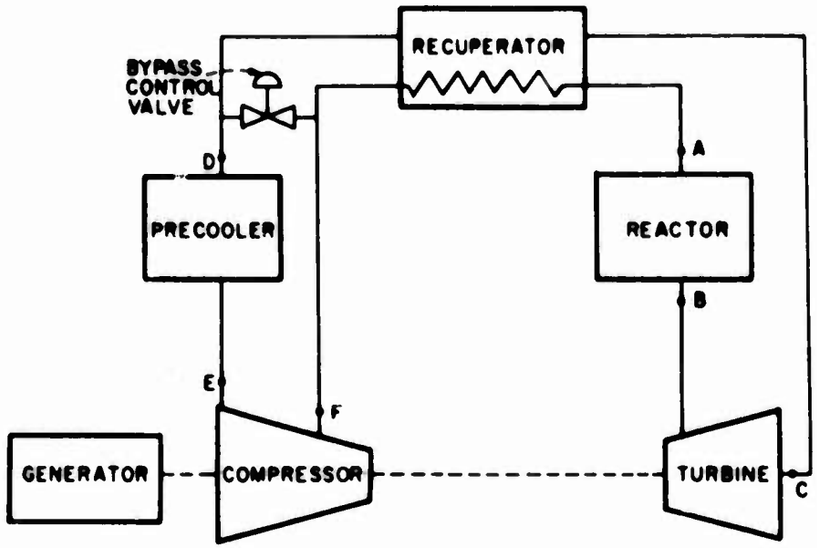

SCHEMATIC DIAGRAM

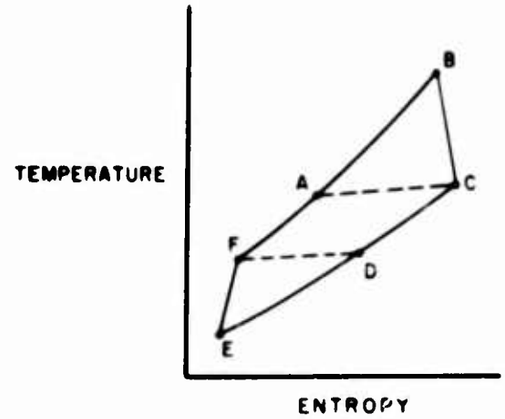

TEMPERATURE-ENTROPY DIAGRAM

Figure 25. ML-1 flow diagram

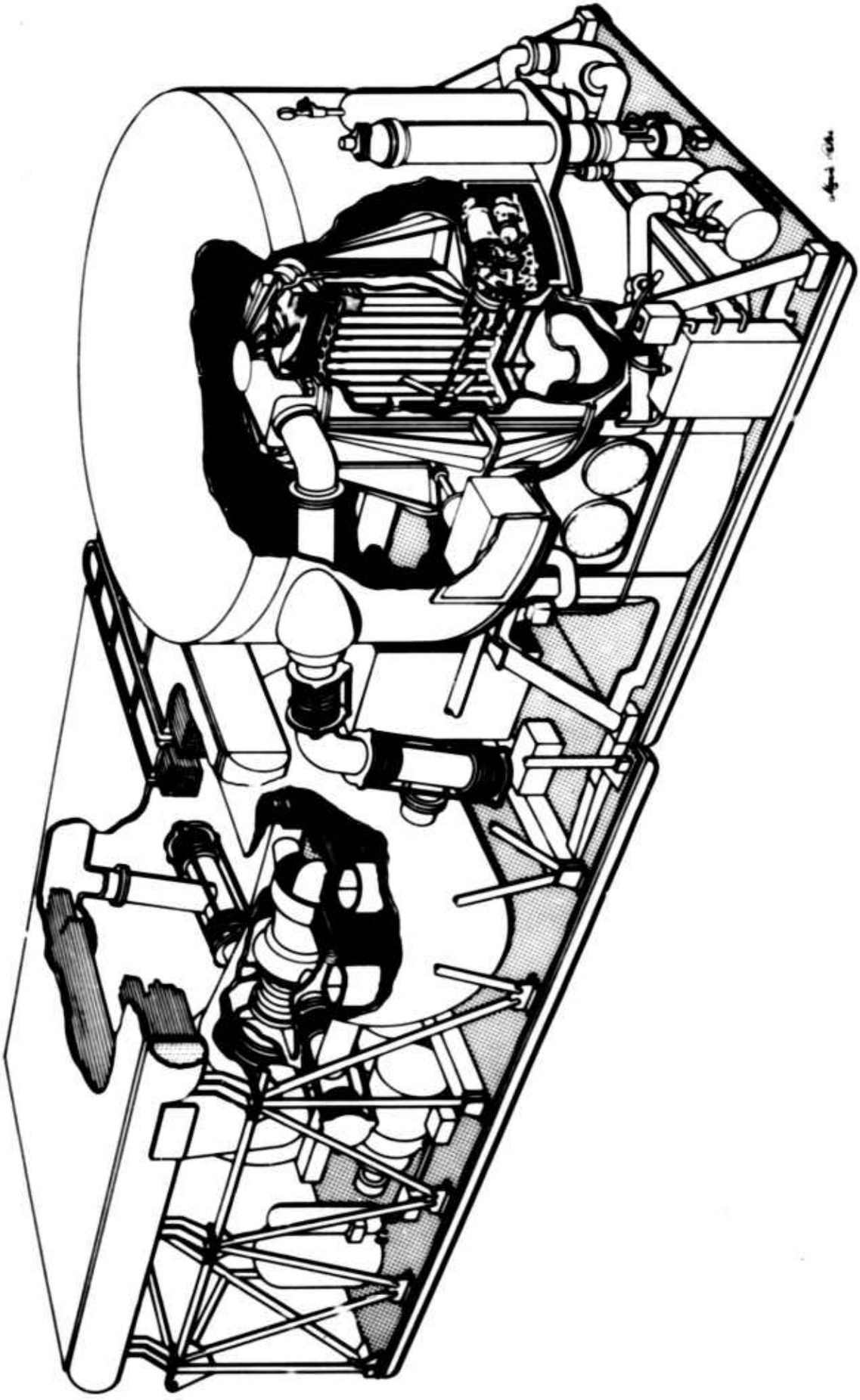

Figure 26. ML-1 nuclear power plant

pressure, enters the reactor at 800°F and leaves at 1,200°F.

A lead shield around the pressure tube bundle is a fast-neutron reflector. Six pairs of semaphore-type control blades are placed near the circumference of the core. Aluminum-encased lead encloses the reactor vessel to provide shielding from residual radiation during shutdown and transport. The lead shield incorporates an annulus to contain borated water during operation.

The reactor and its shield are supported within a tank 9 feet in diameter. This tank is filled with borated water to provide the main operation neutron shielding. It is drained before shipment to reduce weight. Equipment mounted outside the reactor tank circulates demineralized moderator water in a system separate from the shield water. The tank is covered to prevent contamination. When fuel elements are to be installed, or other maintenance is to be done on a "hot" core, an extension is added to the tank and filled with water to provide radiation shielding for personnel working above the reactor core.

The shipping skid is a structural part of the reactor tank bottom. Inner and outer continuous skirts separately transmit the main reactor and tank loads to the shock mounts underneath. The reactor is suspended in canned lead shield with twelve aluminum ribs. Each rib assembly is bolted to the inner and outer radial shields and to the outer aluminum support ring. The aluminum support ring is, in turn, wedge-bolted to the reactor tank inner support.

(1) Pressure vessel

The reactor pressure vessel separates the coolant gas from the moderator water and the shield water. The major components of the vessel are the inlet and outlet ducts and plenums, and the pressure tube bundle. Each plenum contains a tungsten shielding baffle.

The pressure vessel is designed to operate at stress levels within the limits allowed by the ASME Pressure Vessel Code. The inlet gas temperature of 800°F, an exhaust gas temperature of 1,200°F, and a moderator water pressure of 30 psia.

All walls of the pressure vessel exposed to the high-temperature

coolant gas are internally insulated. Thus, the walls are subjected to low temperatures and correspondingly low thermal stresses and expansions. The insulation consists of a 0.090-inch-thick inner liner and three 0.015-inch-thick thermal radiation shields between the liner and the walls. To minimize heat transfer between layers, gaps are maintained between the inner liner, the shields, and the wall by spherical dimples. The insulation is made more effective by thin circular rings that block all gaps to cause essentially stagnant air conditions. The temperature gradient for this type of insulation was demonstrated in the gas-cooled reactor experiment (GCRE) at NRTS and optimized for the ML-1 with a test mockup assembly.

The pressure vessel is suspended from the upper plenum by a split support ring that transfers the weight load to structural members in the inner radial shield. In addition, both the upper and lower plenums are keyed to the inner radial shield to prevent torsional loads from being transmitted through the tube bundle. The radial shield is, in turn, supported by the main structural complex of the shield tank. The support ring and the structural members are designed to withstand 5-g shock loadings in all directions.

(2) Inlet and outlet ducts and plenums

The inlet and outlet coolant ducts are made of 10-inch, schedule 40, AISI type 304L stainless-steel welded pipe, with elbows and forged flanges of the same material. All components are fabricated to rigid specifications that include X-ray inspection and hydrostatic- and helium-leak tests of all welds. Both gas ducts, which connect the reactor to the power conversion equipment, pass through the wall of the shield water tank. Here, a flexible bellows seal is installed on each duct to allow deflections up to 1/8 inch in all directions, relative to the shield tank. The bellows units are seal-welded to the outside of the gas ducts and then sealed to the reactor tank. The bellows, in conjunction with two expansion joints on the power conversion package, eliminate all stresses (except, of course, pressure stresses) in the ducts, joints, and reactor plenums.

A Grayloc seal is used for the reactor cover (upper plenum cap) and inlet duct joints within the shield tank so that the cover may be removed.

A stainless-steel Grayloc seal was tested to check applicability and integrity in this type of service. Testing included a helium mass spectrometer leak-check with bending moments up to 3,000 foot-pounds (approximately twice the design load) applied while the joint was pressurized with helium at 360 psig. No leakage was detected.

Each plenum is a two-piece forging: one piece is a flat head; the other is cup-shaped and contains the plenum sidewalls and the tube sheet for the tube bundle. The plenums are fabricated of AISI type 304L stainless steel and are about 26 inches inside diameter, with 2 to 2.5-inch-thick walls.

The lower plenum is assembled with the flat head selectively fitted (with zero clearance) into the cup-shaped forging and is rigidly doweled in place by press-fitted radial shear pins. The joint is welded to ensure a leakproof gas seal. The assembly is designed so that the shear pins resist the axial pressure loads; thus, the weld serves only as a seal, not as support.

The upper plenum assembly includes the removable reactor cover for access to the fuel elements. This cover (the flat head) is joined to the plenum sidewalls by a bolted flange and a Grayloc seal.

(3) Tube bundle

The tube bundle connecting the inlet and outlet plenums has 61 pressure tubes in a triangular array. The tubes are made of AISI type 321 stainless steel. The minimum inside diameter of the tubes is 1.756 inches; the nominal wall thickness is 0.020 inch.

The pressure tubes are joined to the tube sheets with joints that are structurally sound and leaktight under all anticipated service conditions. Joint fabrication included a rolling sequence in which the thin-walled pressure tubes were expanded into the tube sheet. Expansion was limited to a predetermined amount of plastic deformation. The mechanical joints provide the required strength but are not intended to be seals. After the rolling process is completed, the tube ends were machined flush with the surface of the tube sheet and fusion-welded to the tube sheet. The weld formed a gastight seal at each joint. To ensure the integrity of the seal welds, experimental programs were carried out to establish optimum procedures; and tests were performed on the finished joints. The testing program included: (1) pull tests (minimum

pullout force of 7,850 pounds, equivalent to a 70,000-psi tube stress), (2) thermal cycling and shock tests (temperature differentials up to 400°F), and (3) helium leak-check tests.

The pressure tubes and the gas-side surfaces of the tube sheets are insulated internally. Inasmuch as the fuel elements are insulated with Thermoflex, the pressure tubes require no other insulation. The tube sheets are covered with tightly packed, 0.5-inch-thick blankets of Refrasil insulation.

The moderator water, circulating through the tube sheets and core region, is separated from the borated shield water by the inner radial shield (lead). This shield is seal-welded to the upper plenum by a U-shaped ring, spun from 0.020-inch-thick stainless-steel sheet. The lower plenum is sealed to the bottom of the radial shield by a 36-inch diameter bellows unit that is welded in place. The bellows has six convolutions and is fabricated of 0.018-inch-thick stainless-steel sheet. The bellows spring rate of 740 lb/in. allows axial movements of ±0.25 inch. (Actual operation conditions require an allowance for approximately 0.13 inch.) The bellows successfully withstood hydrostatic pressure tests to 50 psig. (In service, pressures of approximately 40 psig are expected.)

(4) Water cooling system

Moderator water cools the lead-tungsten fast neutron reflector, the stainless steel tube sheets, and the stainless steel pressure tubes. Shield water cools the lead inner and outer radial shields. Both water systems are heated by nuclear effects (gamma and neutron absorption) in the adjacent metal and in the water itself. Also, both water systems act as heat sinks for heat conduction from the high-temperature coolant inside the pressure vessel. The amount of heat conducted into the water has been minimized by insulation inside the pressure vessel. Nevertheless, the heat loads of the moderator and shield water systems are appreciable when the reactor is at power. The amount of heat absorbed by the shield water system is quite nominal and easily accommodated.

The moderator water system is designed to pump 300 gpm of water when the ambient air temperature is 100°F. The moderator water temperature will be 180° to 190°F at the reactor outlet. Because the boiling

temperature at the outlet pressure is over 240°F and the maximum film temperature is about 15°F, the water will not experience even local boiling inside the reactor.

The moderator water flow through the reactor (with appropriate velocities) is as follows: The water is pumped through a 4-inch line (7.6 ft/sec) into an annular distribution ring (8 ft/sec) that circles the upper plenum. This ring distributes the water so that it flows down through the 0.25-inch annular gap (4 ft/sec) between the inner radial shield and the fast neutron reflector, to the bottom of the core. Here, the water flows in parallel through 12 holes (4.3 to 5.9 ft/sec) in the tube sheet and through 24 slots (20 ft/sec) in the bracket between the reflector and the tube sheet into the central volume of the core. The flow through the core (0.4 ft/sec) is upward around the pressure tubes and out through another set of 12 tube-sheet holes and 24 bracket slots into a collection ring that also circles the upper plenum. From the collection ring, the water exits through a 4-inch line to the moderator water heat exchanger located on the power conversion package.

In the tube sheets, water cooling greatly reduces the temperature of the metal walls. Without this cooling, thermal stresses (from high temperatures on the coolant side of the metal and from gamma and neutron absorption in the metals) would exceed the yield strength of stainless steel. In each tube sheet, the water flows in parallel through a network of 12 passages bored through the center plane of the sheet to connect at the pressure tube joints.

A breakdown of the heat load accommodated by the water in the lower tube sheet shows that about 32,600 Btu/hr is generated by nuclear effects; about 7,900 Btu/hr is conducted through the Refrasil insulation on the nitrogen side of the tube sheet; and about 28,900 Btu/hr is lost through the fuel element insulation at the pressure tube joints. The average temperature rise is 1.6°F. This network of cooling passages reduces the maximum temperature in the sheet to less than 350°F.

b. Power conversion skid

The power conversion skid supports and encloses the power conversion equipment during both operation and shipment. The three major items of equipment are the turbine-compressor set (t-c set) which includes a reduction

gearbox; the alternator and starting motor; and the recuperator and precooler. The skid also contains a lubrication system for the t-c set and alternator; a vacuum pump for purging all interconnecting piping, including the control bypass; and electrical switchgear.

The rotating equipment is located "inline" and the outlet from the turbine is connected directly to the recuperator. The reduction gearbox is mounted to the compressor at the high-speed end, and to the 500 kva alternator at the low-speed end. The gearbox also provides a drive for the lubricating oil pump.

The recuperator is rigidly fixed to the structure of the skid floor on the vertical centerline of the rotating equipment. The alternator is mounted on sliding feet to accommodate thermal expansion. The equipment is self-supporting between the alternator and the recuperator. The precooler forms the roof of the skid.

(1) Main piping system

System components are connected by type 316 stainless steel piping, with the exception of the precooler inlet and outlet ducts which are aluminum. In the power conversion package, pipe sizes are variously 8 inches, 10 inches, and 14 inches, designed to equalize velocities throughout the system. The wall thickness of these pipes is schedule 10, sufficient for this application inasmuch as thermal radiation baffles in the system reduce wall temperatures to allowable limits. Schedule 40 piping is used in the reactor package.

Four bellows expansion joints between the various components absorb thermal deflections in the piping. The expansion loints, rated for 300 psi at the operating temperatures, are stainless steel bellows that are pressure-balanced to minimize pressure forces on the equipment and the mounts. Thus, the major forces are due to the spring constants of the bellows.

Gas bypass lines and valves are connected between the compressor discharge and the precooler as part of the turbine-compressor set control system. The bypass control valve is a 2-inch valve, rated for maximums of 600°F and 300 psig, operated by an electric servomotor; a flexible metal

belt opens and closes ports inside the valve to control the gas flow. A 2-inch solenoid valve is provided as an over-speed valve. A 2-inch pressure relief valve that vents to atmosphere is included in the piping system.

(2) Turbine-compressor sets

The rotating equipment is arranged inline with the turbine compressor set. The turbine outlet is connected directly to the recuperator. The reduction gearbox is coupled to the compressor at the high-speed end, and to the alternator and starting motor at the low-speed end. The combination alternator/starting motor assembly is mounted on sliding feet to accommodate the thermal expansion of the turbine-compressor set and of the gearbox; the latter is self-supporting between the alternator and the recuperator. The recuperator is fixed to the skid floor on the vertical centerline of the rotating equipment. The turbine outlet is directly connected to a flange on the recuperator shell.

Two different types of turbine-compressor sets are being considered for the ML-1 power plant. One t-c set uses a radial-flow compressor and (with its turbine) rotates at 18,250 rpm. The alternate t-c set uses an axial-flow compressor and (with its turbine) rotates at 22,000 rpm. Both of these units will undergo high-temperature shakedown and operational tests at Aerojet-General Corporation, Azusa, California. Once these tests are completed, a skid, with either the axial or the radial t-c set will be shipped to NRTS and attached to the ML-1 reactor package. Thus, reactor experiments will be conducted with a tested power conversion system.

Descriptions of the t-c sets are presented in the following paragraphs.

(a) Radial-flow turbine-compressor set

The radial-flow t-c set consists of a reaction-type, two-stage, axial-flow turbine coupled to a two-stage, radial-flow compressor. The turbine expansion ratio is 2.38; the compression ratio is 2.72.

The turbine is designed with a constant blade root diameter of 12.14 inches. The mean blade diameters for the first- and second-stage rotors are 12.90 and 13.20 inches, respectively. Each rotor has 83 blades;

each stator ring has 79 blades. The rotor blades are precision-cast Inco 713 alloy. These blades are assembled to the wheels with bulbroot attachments. The turbine wheels are Incoloy 901 forgings that are bolted together on the hollow shaft. The stator blades are precision-cast Inconel. The stator rings and the interstage diaphragm are welded assemblies.

The compressor wheel diameters for the first and second stages are 11.9 and 11.2 inches, respectively, with corresponding eye diameters of 7.4 and 6.7 inches. Twelve full-length and twelve half-length blades are used in each impeller wheel. The shrouded impellers are precision-cast in aluminum AL 355 T71 alloy. The impellers are pinned to shaft spacers that are keyed to the hollow shaft. The interstage baffle plates, diffusers, and return guide vanes are machined from aluminum castings.

The main housing of the t-c set is cast in type 304 stainless steel. The hollow shaft is made of type SAE 4340 steel. The overhung turbine rotors and the compressor impellers, mounted on the common shaft, are supported by two tilting pad, radial (journal) bearings. The Kingsbury-type thrust bearing is located immediately inboard of the turbine-end bearings to avaid thermal distortion effects.

An external connection is provided to supply the working fluid (at a separately controlled pressure) to a balance chamber downstream of the second-stage turbine rotor. This balance chamber exerts a thrust on the main shaft proportional to the controlled pressure and thereby reduces the load on the thrust bearing, to ensure axial stability.

Both the working fluid (coolant gas) and the lubricating oil cool the t-c set. Working fluid from the balance chamber passes through the chamber labyrinths and along the second-stage turbine rotor. Working fluid from another external connection is supplied under pressure to the cavity inside the hollow shaft; the fluid flows through drilled holes in the first-stage turbine rotor and through the turbine interstage labyrinth. Various seals are provided to minimize the intermixing of working fluid and lubricating oil. A buffered labyrinth seal, supplied with buffer working fluid from an external connection, seals the shaft between the compressor and the turbine. Plain labyrinth seals seal the shafts between each stage of the compressor and turbine. Buffered

labyrinth seals supplied with buffer working fluid from external connections seal the shaft around the several bearing. Because the lubricating oil system operates at a lower pressure than the working fluid used for sealing these buffered labyrinths, oil is prevented from entering the primary coolant gas circulating system. This sealing medium is provided by the compressor in the form of a bypass stream during t-c set operation, and by an auxiliary compressor during startup and shutdown.

Incorporated in the turbine-compressor set housing is a complete reduction gear unit that reduces the t-c set shaft speed (18,250 rpm) to the alternator shaft speed (3,600 rpm). A drive shaft at right angles to the main shaft is also provided to supply power to the lubricating oil pump.

(b) Axial-flow turbine-compressor set

The axial-flow t-c set consists of a two-stage, axial-flow turbine coupled to an eleven-stage, axial-flow compressor. The turbine expansion ratio is 2.38; the compressor compression ratio is 2.72.

Both the first- and second-stage turbine rotors have 47 shrouded blades. The rotor blades and shrouds are forged as a unit out of N155. The outer diameter of the shroud is machined to provide a two-stage labyrinth seal. The blade roots, of fir-tree design, are held in the discs by axially broached slots in the rims. The turbine wheels, forged from Incoloy 901, are bolted to the hollow compressor rotor shaft by means of six head bolts. Radial pins are provided to transmit torque between the turbine wheels and to maintain concentricity with the rotor shaft.

Both the first- and second-stage turbine stator assemblies have 47 blades. The blades are cut from rolled N155 or 19.9DL stock and are furnace-brazed to half-ring sections. The axial compressor has eleven stages, consisting of 61 blades per stage. The blades in all eleven stages are similar except for length. The rotor has a constant diameter, so that rotor blade fastening is similar in every stage. The hollow rotor is made of type SAE 4340 steel; the compressor blades are rolled 403 stainless steel stock. The blade roots have T-shaped cross section and are held in machined grooves in the rotor by spring locking shims. A radial pin in each groove prevents circumferential movement of the blades relative to the rotor.

The compressor stator case, split along the horizontal center line, accommodates the ten stages of compressor stator blade assemblies. The stator blade assemblies are identical except for blade length and blade-carrier diameter. There are 58 blades in each stage. The blades are cut from 403 stainless steel rolled airfoil stock and are forced into the carrier half-sections.

The main housing of the t-c set and gearbox is a welded mild steel assembly. Openings are provided for the compressor inlet and outlet ducts and for the turbine inlet.

The turbine-compressor rotor assembly is supported between bearings. The compressor bearing housing contains the compressor journal bearing, the L-seal, the thrust bearing, part of the labyrinth seal, and necessary connections for the lubricating oil supply and drain system. The turbine bearing housing is identical to that for the compressor bearing, except that the turbine bearing housing has no L-seal or thrust bearing. Because the bearing housing is completely surrounded by the turbine discharge gas, oil cooling is provided in the walls of the housing.

Various seals located along the t-c set rotor shaft prevent the escape of lubrication oil into the set or into the high-pressure gas. Buffered labyrinth seals at the turbine and compressor bearings prevent oil from leaking into the set. The buffer gas is supplied from bleeds on the third and seventh stages of the compressor during operation. Because the lubricating oil system operates at a lower pressure than the buffer gas system, oil is prevented from entering the primary circulating system. An auxiliary compressor supplies the buffer gas during startup and shutdown.

The L-ring seal, at the compressor inlet end only, seals the system from the thrust bearing, gearbox and generator housings. These housings are maintained at a lower pressure.

Labyrinth seals between the turbine stages and static, piston ring-type seals seal the compressor inlet from the compressor discharge.

Attached to the compressor stub shaft is an epicyclic reduction gear train that reduces the t-c set shaft speed (22,000 rpm) to the alternator

shaft speed (3,600 rpm). A gear-driven lubrication oil pump coupled to the starting motor shaft provides lubrication at design conditions.

(3) Alternator starting motor

The ML-1 alternator is a totally enclosed, electromagnetically excited, brushless, synchronous alternator. At 3,600 rpm it will generate 500 kva of electrical power. It is designed to operate as a 400-kw, 0.8-pf, 60-cycle, three-phase, 2,400/4,160-volt, continuous-duty generator in ambients from -35°F to +100°F, and can be externally connected to operate in either a wye connection or a delta connection. At 3,000 rpm, the generator will produce 333 kw at 0.8-pf, 50-cycle, three-phase, 2,000/3,467 volts of electrical power. The brushless alternator design best meets the requirements for maximum reliability and minimum maintenance. An axial air-gap version best met the requirement for absolute minimum length.

The alternator is housed in a gastight case flange-mounted to the gearbox case. Also enclosed in the gastight case is a 480-volt line-to-line, three-phase, 60-cycle, 50-hp starting motor mounted on a generator shaft. This starting motor is capable of rotating the t-c set and alternator up to rated speed.

The drive-end housing and the gearbox are the heat sink for the stationary field coil mounted on the drive-end housing. The armature is isolated behind an 0.100-inch-thick diaphragm so it can be submerged in transformer oil. This results in a maximum temperature difference of 125°F between the alternator housing and the hottest spot in the armature. A system of fins and shrouds maintains the housing temperature at less than 25°F above ambient air temperature.

The alternator is separately excited during the starting transient, but is self-excited in operation.

A transformer delivers 480-volt, 50/60-cycle, three-phase power to a three-phase, full-wave, bridge rectifier. The rectifier, in turn, delivers DC power to the field through a magnetic amplifier voltage regulator. The voltage regulator incorporates voltage-regulation, field-forcing, and current-sharing circuits, but does not control load sharing. The load sharing is accomplished by the characteristics of the t-c set speed controller.

(4) Recuperator

The recuperator is a gas-to-gas regeneration heat exchanger of shell and finned-tube-type construction. There is a one shell pass and four tube passes. Low-pressure gas from the turbine flows on the shell side around the tubes; high-pressure gas from the compressor flows through the tubes and thence to the reactor.

The recuperator is constructed of various AISI series 300 stainless steels. The tube bundle consists of 840 tubes bent into a four-pass serpentine. The tubes are 3/8 inch outside diameter with 0.018-inch-thick walls. Fins are brazed on the outside of the tubes; the fins are 0.008 inch thick, 0.050 inch high, and spaced 30 per inch. Each tube has an effective length of 44 inches. The tubes are welded into 8-inch-diameter tube-sheet headers that are contained entirely within the shell. The shell is 45 inches in diameter, 80 inches long, and has 1/4-inch-thick walls and ends. The shell inlet is a 20-inch-diameter flange connected directly to the turbine exhaust; the shell outlet is a 14-inch-diameter nozzle.

The shell is designed for an internal pressure of 115 psig at 926°F and an external pressure (when the system is evacuated with a vacuum pump prior to filling it with working fluid) of 15 psig at 70°F. The tubes and headers are designed for an internal pressure of 301 psig at 926°F.

The recuperator heat duty is 11,000,000 Btu/hr. The overall heat transfer coefficient is 17.3 Btu/hr ft^2 °F: exchanger effectiveness is about 80 percent.

(5) Precooler

The precooler is a single-pass, cross-flow, gas-to-air heat exchanger, with working fluid inside the finned tubes and air outside. Six 7.5-hp fans located under the precooler blow air up through the precooler at a rated flow rate of about 68,000 cfm (289,000 lb/hr). Control is afforded by operating several combinations of fans at two speeds.

The precooler is constructed of aluminum for minimum weight. The tubes are extruded of type 3003 aluminum, and the headers are type 2219 aluminum alloy. The tubes have both longitudinal, internal fins and

circumferential, external fins. The tubes are 5/8 inch outside diameter, 0.040 inch thick with six 0.040-inch-thick, spoke-like internal fins. The external fins are 1 1/4 inches outside diameter, 0.012 inch thick, and spaced 11 fins per inch. The precooler contains 1,132 of these finned tubes arranged in 13 horizontal layers. The precooler is designed for an internal pressure of 200 psig at 475°F, and for a heat duty of 7,700,000 Btu/hr. The overall heat transfer coefficient is 6.2 Btu/hr ft^2 °F: the exchanger effectiveness is about 92 percent.

The precooler, moderator cooler, and oil cooler are on the same frame and form the roof of the power conversion package.

(6) Auxiliary power system

A 45-kw auxiliary diesel-generator or other auxiliary power supply will be used to start the power plant and to supply power for support equipment during normal startup and shutdown. This generator set, military specification MIL-G-14609 (CE), will be furnished by the Army.

The generator set is complete with starting batteries, starting motor, fuel tank, control panel, etc. The engine is started from a pushbutton on the control panel and is provided with a winterization system for starting at temperatures below -25°F.

The power output of the generator is 480 volts, 60 cps, three-phase, four-wire neutral grounded, wye connected. The current is fed from four studs located on the control panel, through a 550-foot cable to the power conversion skid. The power is distributed to the rest of the ML-1 system from there.

(7) Electrical switchgear

The output of the three-phase, 2,400/4,160-volt, wye-connected, 60-cycle, 400-kw alternator is fed through a circuit breaker to the external load and parallel stations. The power for the plant auxiliary equipment is tapped off at the alternator side of the main circuit breaker and is transformed down to 480 and 120 volts, three phase. Nearly all of the auxiliary motors and heaters operate at 480 volts. A transfer switch located on the secondary side of the 4,160/480-volt transformer allows the auxiliary equipment to be

driven either by the main alternator or by an auxiliary power supply.

The alternator is protected from internal and external faults and from motorizing off-parallel generators by using static protective relays. The plant lightning protection system is self-contained within the switchgear.

To conserve weight and space, all switchgear (except the transformers, which radiate heat) are open type and are mounted in two weathertight aluminum containers.

c. Control cab skid

(1) General

Instrumentation and control circuits for the ML-1 are designed to use transistors and military quality relays to ensure reliability, ruggedness and minimum weight. All control circuits are interlocked to provide safe and control sequences during calibration and operation. The control blades cannot be withdrawn from the core until all safety conditions are satisfied. The safety controls include run-safe switches; controls for temperatures, pressures and liquid levels; and a count rate sensor to establish that a neutron source is in the core.

The control cab is connected to the power plant by four 550-foot cables, including one control cable, one low-level signal control cable, one low-level power cable, and one high-level power cable. The transducers produce signal levels sufficient for transmission through the 550-foot cables, or preamplifiers are used where the signal level is extremely low. The cables are designed to minimize signal attenuation and meet ML-1 environmental conditions.

The cables are stored on a skid containing two reels. The reel skid is placed near the control cab and the cable pulled to the power plant for operation. Connections are made at fittings provided on the power conversion skid and the control cab. The cables will withstand abrasion and bending without any change in electrical characteristics. Each signal cable is self-shielded to reduce electrostatic pickup. Low-impedance circuits are used for signal transmission.

Circuit breakers for the generator, pumps, and other large motors

are mounted on the power conversion skid. Heavy-duty, aircraft-type breakers are used to reduce weight.

Instrument racks in the control cab are shock-mounted so the instruments meet the shock and vibration requirements listed in section e.

When the power plant is shut down, a 3 kw/hr battery inverter system supplies power to the following instrumentation: neutron monitors in the intermediate channels, control blade position indicators, amplifiers for the reactor outlet temperatures, blade position motors, and pressure indicating systems.

The controls, power circuits, and instruments in the control cab permit a single operator to control the reactor and the power conversion equipment. The controls are arranged in graphic panels to group all instruments within easy reach of the operator. The cab, designed as an integral unit, contains the major panel assemblies: (1) process panel, (2) nuclear instrumentation panel, and (3) power panel. An intercommunication system connecting the test building, auxiliary control building, and control cab is also located at the console. Air conditioning equipment and a heating unit are installed in the cab to protect temperature-sensitive equipment. A 2-kw/hr battery inverter system, located in the control cab, supplies power during plant shutdown to intermediate-range neutron monitors in channels 3 and 4, control blade position indicators, blade actuator motors, amplifiers for the reactor outlet temperature sensors, pressure indicators, and auxiliary moderator water pump.

(2) Nuclear instruments

Three ranges of flux measuring instruments monitor the eight-decade span from source level to full-power level. Safety and reliability are ensured by duplicate measuring channels in each of the three overlapping ranges; seven neutron detectors and associated circuits are provided. The read-out from these instruments is on the following console-mounted meters: Log Count Rate (startup channels 1 and 2), Reactor Period (channels 1, 2, 3, and 4), Log N Power (intermediate channels 3 and 4), and High Level Safety (channels 5, 6, and 7). An additional meter monitors the power supply to the seven detectors. Selector switches are provided so that the different

channels may be cross-checked. The startup channels cover a $1\text{-}10^6$ cps range and overlap the intermediate channels by a decade. The intermediate channels have a seven-decade range, including the full-power level. The high-level channels have a three-decade range and adjustable high-level trips.

The seven neutron detectors are the following: two B^{10}-coated proportional counters for the startup channels, two compensated ionization chambers for the intermediate channels, and three uncompensated ionization chambers for the high-level channels. The detectors are located in demineralized water wells in the reactor shield tank. The startup channel signals are amplified locally so that these pulses can be separated from noise signals (picked up in the long connecting cables) by a pulse height discriminator. Coaxial conductors connect detectors and preamplifiers with computer-amplifier equipment in the control cab. A total of twenty coaxial cables (14 operational, 6 spare) are provided.

Incorporated in the equipment are built-in test provisions to check the startup channels at four different counting rates, the intermediate channels at four different flux levels, and the three high-level channels at 0 and 100 percent points. Three period-calibration signals are also provided. A source level interlock, incorporated in channel 1 of the two startup channels prevents energization of the control blade clutches unless the counting rate is greater than an established value. Period scram signals are derived from the startup channels and from the intermediate channels. Scram signals are also initiated by the three high-level channels; a selector switch makes it possible to have either a 1-out-of-3-channel-coincidence or a 2-out-of-3-channel-coincidence scram. To prevent inadvertent misadjustment, set points can be adjusted only by partially removing the chassis from the console racks.

The startup (proportional counters) are protected against premature burnout by an interlock in the intermediate channels. This interlock turns off the high voltage to the detectors when reactor power is in the intermediate range. Voltage is automatically restored to the detectors when reactor power is again below this protection set-point.

d. Auxiliary package

(1) General

Maintenance supplies and certain support equipment are required for the ML-1 power plant. Space and weight limitations make it impossible to locate this equipment on the three major packages. Such support equipment includes makeup water treatment equipment; the nitrogen gas makeup system; waste gas storage equipment; cable reel, bulk anhydrous boric acid (B_2O_3) and ion exchange resin. Certain supplies are needed during operation, including spare ion exchange resin, space filter cartridges, miscellaneous hand tools, protective clothing, and air masks. In addition, special equipment is needed for changing fuel elements in the field and for drying out the reactor after fuel replacement. This special equipment is not carried because it is needed only for fuel element replacement.

The ML-1 auxiliaries are mounted on individual bases equipped with suitable framework, shock mounts and runners. The separate packages provide maximum flexibility and allow a number of simultaneous operations. For example, the borated water solution can be added to the neutron shield tank with the makeup water equipment while the cable is being unrolled from the cable reel and the gas systems are being connected.

Auxiliary gas handling equipment is required to supply gas to the main power loop, to evacuate the loop during initial startup, and to store potentially contaminated gas during shutdown.

(2) Cable reel system and equipment

A power-operated cable reel assembly is provided on a skid with runners. Two reels on the skid store four 550-foot lengths of power and instrumentation cable for the ML-1 during transport. The cable reel skid is unloaded and placed adjacent to the control cab during plant setup operations. The power drive clutch is disengaged and the cable is pulled off of the reel by a jeep or similar small vehicle. The cable ends are then pulled to the ML-1 plant. During plant shutdown, before relocation, the power drive clutch will be engaged and the cables rewound on the reels using power furnished by the auxiliary generator. The cables will be completely detached from the reel during plant operation. The cable reel and cable weigh about 6,000 pounds.

e. Shock and vibration protection requirements

Shock and vibration protection is provided integral with the plant consistent with each transport type as indicated below.

(1) Shock loading in transit by rail, semi-trailer, or ship without loss of serviceability:

Direction	Load factor, g	Duration of versed sine pulse, sec
Fore and aft	15	0.030
Lateral	2	0.030
Vertical	4	0.030

The maximum shock load transmitted to components in either direction will be reduced to 8g fore and aft by shock mounts provided on the skid.

(2) Emergency landing shock loads during transit by air, with questional plant serviceability:

Horizontal	8g for 0.1 sec
Vertical	4.5 g for 0.1 sec
Lateral	1.5 g for 0.1 sec

(3) Emergency landing shock loads during transit by air, without loss of plant serviceability:

Horizontal	5 g for 0.1 sec
Vertical	4.5 g for 0.1 sec
Lateral	1.5 g for 0.1 sec

(4) Steady vibrations in transit, without loss of serviceability:

Source	Peak amplitude, inches	Frequency, cps
Railroad flatcar	0.12	20 - 30
Semi-trailer	0.05	20
Ship	0.05	15 - 20
Aircraft	0.05	20

7. MH-1A NUCLEAR POWER PLANT

The MH-1A 10,000 kw(e) floating power plant is presently under construction by the Martin-Marietta Corporation for the Philadelphia Engineer District of the US Army Corps of Engineers. The design of the MH-1A is based on the following criteria:

(a) Proven design

(b) Ease of operation

(c) Maximum reliability and simplicity of design

(d) Maximum plant safety

The MH-1A power plant consists of a turboelectric generating plant utilizing a nuclear reactor as a heat source. The entire power plant is contained within a floating mount which is a conversion of a Z-EC2 class "Liberty" ship. The 10,000 kw(e) power plant is a pressurized, water nuclear reactor system coupled with a steam-electric conversion system. This barge-mounted plant is capable of being towed to any port in the world for the purpose of providing or augmenting electrical power needs under wartime or emergency conditions.

The reactor and all of the associated equipment which contain high-pressure radioactive fluid are contained within a vapor containment vessel. This vessel is constructed as a 31-foot-diameter right cylinder with hemispherical ends, overall length approximately 41 feet. It is installed horizontally within the midbody of the floating mount and is located amidships; extensive grounding and collision protection are provided to ensure the integrity of the containment system.

The reactor vessel is designed for 1,750 psia at saturated steam temperature. The reactor operates at a nominal full power of 45 Mw(t) at a mean temperature or 490°F, producing 342 psia steam in a horizontal steam generator. Flow is maintained by a single pump; pressure is controlled by an electrically heated, pump-induced spray pressurizer.

The main turbine-generator produces approximately 11.5 Mw(e) (gross). The electrical energy is distributed to external loads at any of several desired voltages and at either of two frequencies, and to an internal (in-plant) lead

required to service plant equipment. The waste heat from the turbine is rejected to a surface condenser. Cooling seawater to the condenser is provided by two main circulating pumps.

MH-1A DATA SHEET

General

Net electrical output, 0.8 pf	kw	10,000
Auxiliary power	kw	1,500
Gross generator	kw	11,500
Reactor heat output	kw (th)	45,000
Equivalent efficiency	%	22.2

Primary system

Number of loops		1
Number of coolant pumps		1
Reactor inlet temperature	^{o}F	470
Reactor outlet temperature	^{o}F	510
Operating pressure	psia	1,600
Coolant flow	10^6 lb/hr	3.26

Secondary system

Steam generator inlet temperature	^{o}F	345
Steam generator outlet temperature	^{o}F	429.5
Steam generation rate	lb/hr	170,900
Full load pressure	psia	342
Turbine throttle pressure	psia	330
Full load throttle flow	lb/hr	169,260
Extraction pressures		
1	psia	141
2	psia	40
3	psia	12
Extraction flow (1)	lb/hr (total)	39,230
Turbine back-pressure	in. hg. abs	2
Full load condenser flow	lb/hr	130,030
No. of condensate pumps		2
No. of feedwater heaters		3
No. of boiler feed pumps		3

MH-1A DATA SHEET (cont'd)

Secondary system (cont'd)

Generator rating

Power output (60/50 cy)	kw	11,500/ 9,583
Power factor		0.85/ 0.85
Kva rating	kva	13,529/ 11,274
Voltage	volts	13,800/ 11,500

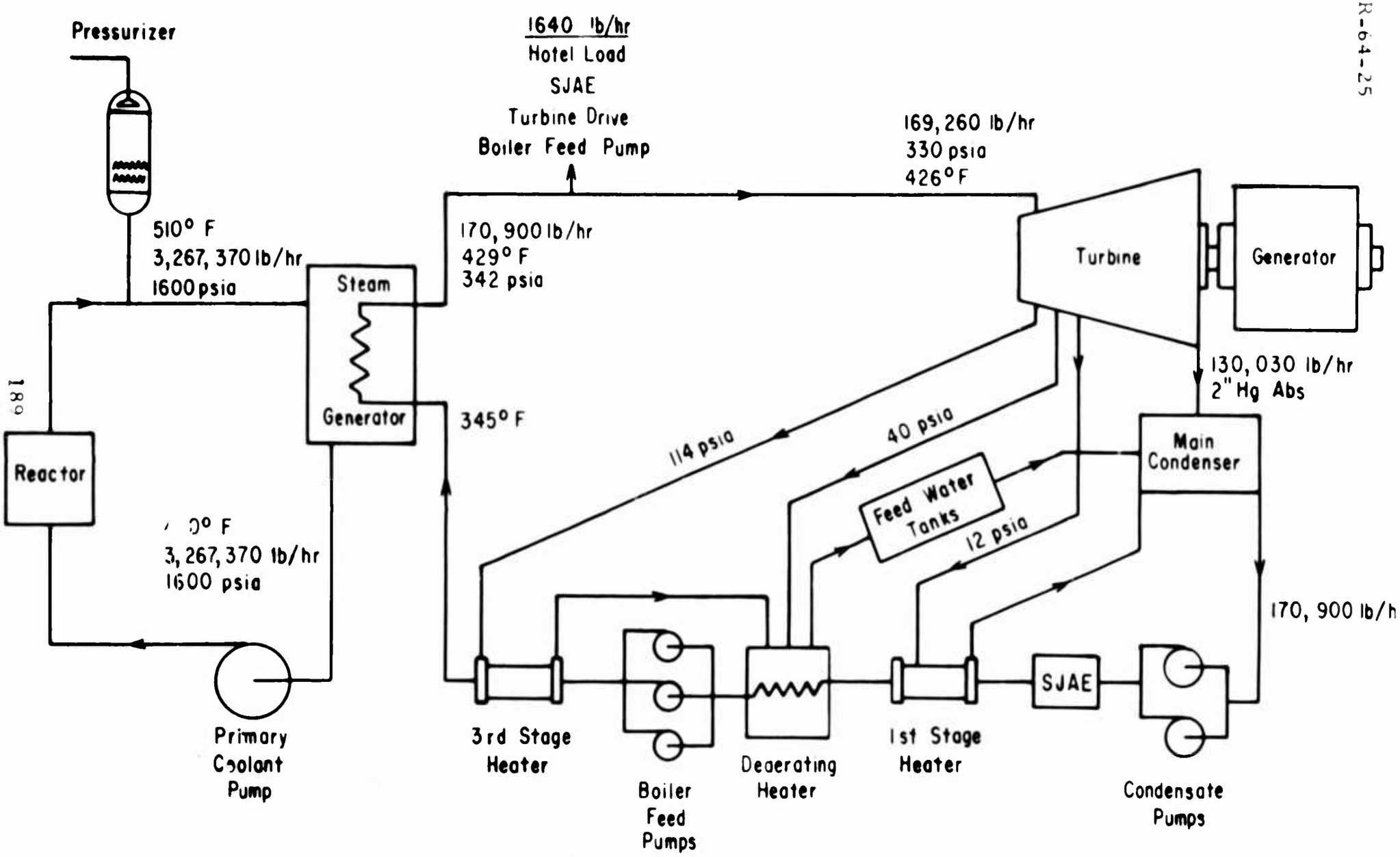

Figure 27. MH-1A flow diagram

a. Primary system

The primary loop consists of the reactor, the horizontal U-tube generator, the primary coolant pump and associated valves (vent and drain) and piping. In the primary system, high-purity light water is pumped from the reactor outlet through the horizontal U-tube steam generator and back to the reactor inlet through a single canned motor pump.

The system is designed to transfer the rated reactor thermal output of 45 Mw or $15^4 \times 10^6$ Btu per hour to the steam generator at a constant flow rate of 3,200,000 lb/hr (8,000 gpm) and at an average primary water temperature of 490°F. At this load the temperature rise through the reactor is 40°F, the inlet temperature being 470°F and the outlet temperature 510°F. At lesser loads, the temperature rise through the reactor will vary in proportion to the load. In the steam generator, heat from the primary water generates steam on the secondary side at pressures between 342 and 900 psia, the full load condition being 169,260 lb/hr at a steam drum pressure of 342 psia.

The design pressure of the primary system is 1,750 psia. The secondary system is designed for a maximum pressure of 900 psia. On loss of electric load, a steam dump valve maintains the reactor load above the value corresponding to 850 psia equilibrium conditions.

To minimize the accumulation of activated corrosion products in the primary loop, all material in contact with primary water is austenitic stainless steel with the exception of the steam generator tubes, which are Inconel.

(1) Reactor pressure vessel

The reactor pressure vessel and removable closure head are designed and will be fabricated in accordance with fired pressure vessel requirements of CG-115, "Marine Engineering Regulations," Section I of the ASME pressure vessel code and the Navy "Tentative Structural Design Basis for Reactor Pressure Vessels and Directly Associated Components." The design pressure and design temperature are 1,750 psia and 617°F, respectively.

The reactor pressure vessel and closure head have been sized on the basis of SA-302 grade B carbon steel. All internal surfaces of the

vessel and closure head are lined with 1/8-inch ASTM type 304 stainless steel cladding. The vessel inside diameter of 80 inches and thermal shield configuration were chosen to limit the integrated fact neutron dose to less than 10^{18} nvt over a 20 year life. The vessel bottom head is of semiellipsoidal form while the removable closure head is a dished head design. The inlet and outlet nozzles, located at the same elevation, are oriented radially 90° apart and each has a finished inside diameter of 10.75 inches. The removable closure head is bolted down with 44 3-1/4-inch-diameter, equally spaced, bolt studs designed in accordance with ASME special code ruling 1270N. The bolt circle diameter is 94.58 inches. The bolt material is SA-193 grade B14. The overall height of the reactor pressure vessel, measured from the outside surface of the bottom head to the outside surface of the removable closure head, is approximately 15 feet 5 inches.

A double gasket provides the seal between the pressure vessel flange and head. Any leakage allowed by the seals is carried to the radioactive-waste-disposal-system drain collecting tanks through an intermediate bleed located between the seals. The design of the reactor pressure vessel also incorporates provision for seal-welding the pressure vessel and closure head in the event that operating experience indicates need for additional leaktightness.

The pressure vessel is supported by eight support lugs which mount onto the shield tank support structure. A lug on the bottom of the pressure vessel fits into a receptacle in the containment vessel, thereby preventing any lateral loadings on the pressure vessel. The eight support lugs, which fit into cutouts in the shield tank support, ensure negligible motion of the pressure vessel under any loading condition. The hold-down ring, which is bolted onto the shield tank support, captures the eight support lugs to ensure that the pressure vessel is secure regardless of the orientation of the ship.

The reactor pressure vessel design includes provisions for flux sample holders near the inner wall of the pressure vessel to permit removal of pressure vessel material samples for surveillance purposes during the life of the vessel.

(2) Reactor core

The MH-1A core is a low-enriched, light-water-cooled and moderated, UO_2 rod-type core consisting of two radial zones and using an "out-in" fuel shuffling scheme to improve performance. The design power level is 45 thermal megawatts and the cycle time for fuel shuffling is 1 full power year or 45 megawatt years. The feed enrichment to the core is 5.4 w/o U-235. The initial cycle enrichment in the center region is 5.0 w/o U-235. Natural boron (600 ppm) is used in the clad of all fuel elements as a burnable poison. Total initial core loadings are 2,918 kg of uranium (151.7 kg U-235) and 61.4 grams of boron-10.

A salient feature of the MH-1A core and one which significantly affects the nuclear characteristics and performance of the core is the "out-in" fuel shuffling scheme used. In this scheme, at the end of each operating cycle, the outer 16 elements are transferred to the inner 16 element locations. New elements are loaded into the 16 peripheral positions and the 16 elements displaced from the center region are removed for reprocessing. The performance of these operations coupled with the correct choice of reshuffling interval will result in an "equilibrium cycle" in which the enrichment of the outer region at the end of each operating cycle will be the same as the initial enrichment of the central region at the beginning of the cycle. The addition of the fresh elements to the outer region results in a core with lifetime reactivity and other performance characteristics virtually identical to the preceding core.

(3) Primary coolant pump

The primary coolant pump is a single-stage centrifugal canned motor pump which has a hermetically sealed motor. The pump is designed at rated speed to deliver 8,000 gpm at a TDH of 150 feet while pumping 470°F water. The pump has primary water lubricated bearings. The primary water in the motor cavity is circulated by an internal pumping system and cooled by the fresh water cooling system in the jacket around the outside of the motor body. Heat transmission from the primary coolant is minimized by a thermal barrier and a shaft labyrinth seal.

(4) Steam generator

The steam generator is of the horizontal U-tube type with flanged

nozzle connections at the inlet and outlet plenum end. The moisture separating equipment, housed in the vertical cylindrical section, ensures an exit steam quality in excess of 99.75 percent. The U-tubes are Inconel; approximately 5 percent excess tubes are provided to ensure adequate heat transfer capability over the life of the plant if leakage necessitates plugging some tubes.

Primary water from the reactor outlet enters the inlet plenum, is divided through the tubes and discharges to the outlet plenum where it contracts into the flanged discharge nozzle. Hand holes in the plenums permit access for inspection, cleaning and tube-plugging operations.

Feedwater enters the secondary side through the feedwater piping and mixes with saturated water prior to entering the tube bundle area. Discharge from the secondary side through a blowdown line prevents excessive buildup of solids in the secondary water.

(5) Primary loop piping

The primary loop piping is 12-inch, schedule 120, austenitic stainless steel. All of the piping joints are welded, with the exception of the steam generator connections, which are flanged to facilitate removal of the steam generator if long-term activity buildup should preclude maintenance on board ship.

(6) Pressurizer

The pressurizer is a fired pressure vessel designed in accordance with the US Coast Guard Publication CG-115, "Marine Engineering Regulations and Material Specifications." The vessel is a vertical right circular cylinder with welded hemispherical or elliptical heads. Heater capacity of 200 kilowatts is provided in the lower part of the pressurizer, in three banks of 10, 60, and 130 kw capacity. Heaters are installed in wells provided as part of the pressurizer.

Pressurizer design data summary

Design pressure	1,750 psia
Vessel volume	120 cubic feet
Design temperature	617°F
Surge line diameter	3 inches

During steady-state operation, the pressurizer liquid level fluctuates about a constant level. The primary coolant system pressure is controlled by the pressurizer heaters which maintain saturation conditions in the pressurizer at the normal operating pressure (1,600 psia). Remote-operated vent valves permit the pressurizer to be purged of gases whenever the pressurizer temperature differs from the saturation temperature corresponding to the pressurizer pressure.

Pressure is controlled during a power decrease (insurge) by spraying primary coolant water from the primary coolant pump discharge into the steam volume of the pressurizer. Control of spray flow is accomplished by a remote-operated valve which is actuated by a pressure sensing system at 1,660 $\pm$10 psia. Pressure is controlled during a power increase (outsurge) by flashing of the pressurizer water to steam. Sufficient water volume is provided in the pressurizer so that the heaters will not be uncovered during the maximum outsurge. The heaters are so controlled that low pressure actuates more heaters until normal pressure is regained.

b. Secondary system

The secondary system is made up of the steam supply system, the turbine system, and the condensate and feedwater systems. The main function of the secondary system is to transform available energy in steam supplied from the steam generator into mechanical energy by means of the main turbine, and to return the condensate formed in the process to the steam generator as feedwater. The secondary systems are all of conventional design.

(1) Main steam system

Saturated steam flows from the steam generator (located inside the containment vessel) through the containment wall and a motor-operated valve located just outside of the containment wall, through two transverse watertight bulkheads and thence to the turbine stop and trip valve.

The reactor is designed on the basis of no control rod movement for a step change in net electric load from 100 percent to zero. Such a change causes the average temperature of the primary coolant to rise, and increase in the system volume. Simultaneously, the secondary steam pressure and temperature also increase. In order to limit the pressure rise in the secondary

steam system to 850 psia, a steam bypass system is provided at the turbine.

The steam bypass system discharges steam around the turbine into the main condenser by means of an automatic flow control valve, which opens at 850 psia and has a capacity of 10 percent of the full-load total steam flow. If required, a desuperheater, thermostatically controlled, will be provided to reduce the temperature of the bypass steam. The bypass steam is prevented from impinging straight on the condenser tubes by means of baffles dispersing the steam above the main condenser tubes.

The flow regulating valve in the bypass line will close at a predetermined back pressure in the condenser, and whenever the steam pressure drops below the full-load turbine inlet pressure of 330 psia.

Override control of the steam bypass valve is provided locally at the valve and remotely at the control console.

The main steam piping system is designed with sufficient flexibility to prevent thermal expansion or contraction from causing excessive stresses in the piping material, excessive bending moments at the joints, or excessive forces or moments at flanges of equipment or at anchorage and guide points. Allowable stresses at 900 psia design steam pressure are in accordance with the regulations of the US Coast Guard, CG-115, and well within ASA Code for Pressure Piping (ASA B31.1).

Besides serving the main turbine, the main steam system also delivers steam to the standby turbine-driven main feed pump, the turbine-driven standby lube oil pump, the first and second stage twin-element air ejectors, as well as to several pressure reducing or regulating stations. Normally, the high-pressure bleed will supply the radioactive waste evaporator, the makeup evaporator, the hotel service heat exchanger and the third stage heater; the intermediate pressure bleed will supply the deaerating heater; the low pressure bleed will supply the first-stage heater. However, in the event of low bleed steam pressures, auxiliary steam will be furnished via the above-mentioned pressure-ruducing and -regulating stations to the radioactive waste evaporator, the makeup evaporator, the hotel service heat exchanger, the deaerating heater, and the turbine gland seals.

Steam strainers are inserted in the lines in front of all reducing and regulating stations for protection and proper operation.

(2) Turbine system

The turbine driving the main generator is a horizontal high-pressure, impulse-reaction type designed for condensing and a three-point extraction service. The turbine operates normally on saturated steam at 330 psia and 426°F and delivers sufficient power for the generation of a gross electrical output of 11,500 kw at a frequency of 60 cycles/second. The turbine is directly connected to the generator; rated speed is 3,600 rpm.

The main speed governor operates multiple steam control valves admitting flow of steam to the turbine nozzles. The valves are opened in sequence with proper overlap so that smooth governing is obtained as well as high efficiency at partial steam admission.

The turbine is divided up in two sections, one high-pressure and one low-pressure. After having completed expansion in the high-pressure section, the steam flows through a moisture separator where most of the entrained water particles are removed. The steam re-enters the low-pressure section of the turbine, essentially dry, and completes the expansion down to 2 inches Hg absolute pressure. The moisture content in the exhaust steam is about 14 percent.

The turbine casing design pressure of 900 psia allows sufficient margin for the rise in secondary steam pressure coincident with a sudden decrease in load.

The turbine exhausts directly into the condenser which is located directly beneath and parallel to the turbine. An expansion joint is provided at the turbine exhaust flange to preclude distortion.

The condenser is supported by foundations on the inner bottom.

Flanged connections on the turbine casing are provided for bleed steam for the purpose of heating feedwater.

At normal power the bleed pressures are as follows:

High pressure bleed--141 psia: Used for heating feedwater in third-stage heater, and evaporator plant.

Intermediate pressure bleed--40 psia: Used for heating and deaeration in the deaerating heater.

Low-pressure bleed--12 psia: Used for heating feedwater in first-stage heater.

The pressure at the bleed connections during steady-state operation at partial load will be determined by two effects acting in opposite directions. With a constant steam pressure ahead of the turbine chest, the effect of decreasing the load would be to reduce the pressure at each extraction point roughly in proportion to the steam flow at the turbine control valves since the turbine itself behaves like a series of orifices in parallel. The fact that the secondary steam pressure rises to about 850 psia at zero load net output will not cause appreciable increase in extraction steam pressure (steam control valves restrict flow to partial admission to prevent over-speeding). Thus, the net effect of load decrease would be a proportionate decrease in extraction steam pressures.

(3) Condensate and feedwater system

The condenser is of the divided single-pass type with each section capable of handling 75 percent of steam exhausted by the turbine at 100 percent load, and has been designed to operate under 2 inches Hg absolute pressure at cooling water temperature of 85°F. Tubes may be examined and replaced without breaking joints in piping systems.

Inside surfaces of the condenser water boxes are spray-coated with neoprene.

The condenser hotwell is designed for a storage capacity of 5 minutes supply based upon the design output of one condensate pump. The condensate is pumped through the air ejector inter- and after-condensers, the gland leak-off condenser, the makeup evaporator condenser, and the first-stage heater before discharging into the deaerating heater. These items of equipment are all of conventional marine design.

The deaerating heater is of the pressure atomizing, direct contact, marine type, and fitted with internal vent condenser.

The deaerating heater is of welded steel construction. All the piping connections are flanged 150 psig ASA standard with steel bolts and nuts.

Three main feed pumps are provided; two are electrically-driven, of which one is designated for emergency use, and the third is a steam turbine-driven standby pump with the turbine exhausting to the deaerating heater.

Feedwater with oxygen content of less than 0.005 cc per liter is drawn from the deaerating heater by the operating main feed pump and discharged through the third-stage heater and thence to the steam generator in the reactor system.

A recirculating line returning feedwater to the deaerating heater is connected through an orifice to the main feed pumps' discharge to ensure proper cooling during low flows and when the feedwater regulation vlave is closed.

When the motor-driven main feed pump is in operation, the emergency main feed pump is standing by ready for automatic startup upon loss of feedwater pressure. The turbine-driven main feed pump is a standby in case of power failure.

(4) Generator system

The main generator direct-coupled to the steam turbine is of the horizontal-shaft, revolving-field, air-cooled type with side-mounted fresh-water-cooled air coolers.

The main generator is rated as follows:

Kw	11,500
Kva	13,529
Voltage	13,800 volts
Power factor	0.85
Phase	3
Frequency	60 cycles/second
Speed	3,600 revolutions/minute
Stator temperature rise	60°C (by embedded detector)
Rotor temperature rise	85°C (by resistance)

All temperature rises are based on 40°F ambient and are in accordance with ASA C50.1--1955.

The generator is capable of operation at 50 cycles (3,000 rpm)

at a rating of 9,583 kw, 11,274 kva, 0.85 power factor, three-phase and 11,500 volts. The temperature rises of rotor and stator are the same as indicated for 60-cycle operation of the generator. Stator and field winding insulation will be class "B."

Embedded temperature detectors are provided in the stator winding of the machine to obtain a measurement of the operating temperature for visual indication on the temperature scan system of the control console.

c. Electrical system

The generating equipment includes one turbogenerator rated at 11,500 kw, three phase, 60 cycles, 13.8 kv and capable of generating a reduced output of 9,583 kw at 11.5 kv and 50 cycles; one 1,000-kw diesel generator; two 500-kw diesel generators are 450 volt, three phase, 60 cycles. Switchboards are provided for controlling all the above equipment, with necessary relays and instrumentation.

The diesel generators, with the exception of the 150-kw emergency generator, are used for plant startup and standby service. One 500-kw generator supplies the normal power requirements for the ship while in transit or otherwise idle.

Ship's auxiliaries are designed for operation at 60 cycles and are normally supplied, when the main plant is generating 60-cycle power, through a 1,500-kva, three-phase, 13.8 kv-450 volt, transformer. A 1,500-kw, 50-cycle to 60-cycle, frequency changer provides power for the auxiliaries when the main plant is generating power at 50 cycles.

A separate system is provided for operation of pumps, lighting, communications and other vital equipment required during plant emergency conditions. Power for these units and systems is normally supplied from the plant auxiliary system. The 150-kw diesel-driven emergency generator, which starts automatically upon failure of the normal supply, furnishes the emergency generator room on the bridge deck, i.e., outside of the main machinery spaces and above the main bulkhead deck in accordance with the US Coast Guard requirements, Publication CG-259, "Electrical Engineering Regulations."

In the event of shutdown of the main turbine generator, one of the 500-kw diesel generators will start automatically and furnish power to the auxiliary bus.

A direct current system is provided for operation of emergency lighting, vital AC and DC nuclear reactor controls and instrumentation, all electrically operated circuit breakers, alarms and other control circuits. Power for this system is supplied from either of two motor-generator sets connected to the emergency system and a "floating" alkaline-type storage battery. In the event of a complete loss of normal DC power, the battery will assume the load without interruption of power.

Power for the 120-volt AC lighting system is normally from the plant auxiliary system via three banks of delta-grounded neutral wye-connected single-phase transformers.

(1) Auxiliary generators

One diesel generator rated at 1,000 kilowatts, complete with accessories and associated piping systems, is provided to run plant auxiliaries and necessary reactor equipment during startup and after reactor shutdown. This generator is capable of delivering rated capacity continuously at 60 cycles, 450 volts and 80 percent power factor without exceeding the allowable temperature rise. It will also deliver a 10 percent kw overload continuously for two hours at 80 percent power factor without exceeding the temperature rise limits specified by ASA C-50.1 for such duty.

An exciter is directly connected to the generator and is suitable for use with a direct acting voltage regulator. A field discharge resistor and a hand-operated rheostat are also provided for manual control.

Electric space heaters are provided to prevent condensation during periods of shutdown.

The generator is of the open drip-proof construction with all openings protected with screens for rat-proofing. Self-ventilation is by means of a fan secured to the rotor shaft.

Two complete auxiliary diesel-driven generating sets, rated at 500 kilowatts each, are installed in the diesel generating plant. The generators

have similar characteristics to the 1,000-kw generator and are capable of parallel operation with the 1,000-kw generator and the turbine-generator. Each generator is provided with space heaters, field discharge resistor, field rheostat, and a direct-connected exciter, suitable for use with a voltage regulator acting on the exciter field. The generators are open drip-proof type, self-ventilated by means of a fan secured to the rotor.

One of the 500-kw generators is arranged to start automatically and energize the auxiliary bus in the event of power failure or shutdown of the reactor.

The generator set is provided with automatic starting equipment of such characteristics to obtain full output in not more than 3 minutes.

One complete emergency diesel-driven generating set, rated at 150 kilowatts, is included in the diesel generating plant. This generator is located in the emergency generator room above the weather deck in compliance with the requirements of the US Coast Guard.

The unit is capable of operation at 25 percent overload for a continuous period of 2 hours in any 24-hour period, and will start automatically within 20 seconds and furnish power to the ship's emergency systems upon failure of the normal ship service power supply. An emergency switchboard is provided in the emergency generator room. A tie-breaker is provided at this switchboard for interconnection with the 450-volt bus on the auxiliary switchboard. Construction is of the open drip-proof type. Self-ventilation is provided by means of a fan on the rotor shaft. The generator has its own direct-connected exciter for use with a voltage regulator acting on the exciter field.

An alkali-type battery and a static charger will be furnished for engine starting duty.

(2) Main station transformer and transmission system

The major equipment constituting the main station and transmission system are the main power transformer, deck transmission tower, shore transmission tower, submarine transmission line and overhead transmission line.

Power from the generator 13,800-volt metal-clad switchgear is transmitted through a segregated-phase metal-enclosed bus duct to the deck well of the main power transformer. Copper tube connections are made through removable links to the low-voltage bushings of the main power transformer and from the high-voltage bushings through bare copper cable to the deck transmission tower. When transmission is required at generator voltage, the transformer is bypassed through cabling by means of removable links to the deck tower.

Through the use of removable links and a gang-operated air break switch mounted on the deck tower structure, transmission to shore can be made by either submarine cable or an overhead transmission line. Design of the tower structure will permit takeoff from either side of the vessel.

Portable valve-type lightning arresters are connected to each phase of the transmission lines. The arresters are grounded directly to the hull of the ship by means of steel plates welded to the hull; the arresters are arranged for positive lightning protection at any of the transmission voltages.

d. Nuclear instrumentation system

The reactor nuclear instrumentation system for the MH-1A reactor consists of three sets of neutron detectors and allied equipment, two source-range channels, two intermediate-range channels and three power-range channels. The system is designed to monitor the reactor power over at least ten dacades in three overlapping ranges, with a minimum of two decades overlap between the source-range and intermediate-range channels and between the intermediate- and power-range channels.

Seven detectors will be used to feed the required electrical signals to the appropriate channels of nuclear instrumentation. The detectors are placed in guide tubes (instrumentation thimbles) located in the shield water tank, if a full power flux level corresponding to approximately 5×10^9 to 8×10^9 nv. The tubes are packed with polyethylene or rexolite to minimize gamma and neutron streaming. Manual movement of the detectors, by the repositioning of the detector in its packing, will be possible to provide the flexibility required to position the detector at the optimum flux level for

startup and full power requirements. Sufficient lead shielding will be provided for the intermediate and startup power channels to ensure sufficiently low (10^4 R/hr) gamma dose rate at the detectors. The detectors are designed to operate satisfactorily in an ambient temperature up to 80°C without auxiliary cooling when the guide tubes are cooled by the shield water. A preamplifier, located outside of the containment, may be provided for the startup (pulse) detectors, while the intermediate and power range detectors will be connected directly with their respective signal and high-voltage cables to the control room. The cables will be either triaxial or coaxial with an external braided shield. The cables will be completely segregated from any other power or instrumentation cables to minimize the pickup from electromagnetic or electrostatic fields and will be run in separate shielded trays or in conduit.

REFERENCES

1. Five-on-the-Line, Army Nuclear Power Program (US Army Engineers Reactors Group), Ft. Belvoir, Va., 2nd Edition, 1963.

2. PM-1 Nuclear Power Plant, Addendum to Hazards Summary Evaluation, Martin Nuclear Division, Baltimore, Md., MND-M-1853 (ADD I), 1961.

3. PM-1 Nuclear Power Plant Operating Manual, Martin Nuclear Division, Baltimore, Md., Vols I and II, 1962.

4. PM-1 Nuclear Power Plant Capability Report to the Atomic Energy Commission, Hq ADC, Ent AFB, Colo., 1962.

5. Glasstone, Samuel and Sesonske, Alexander, Nuclear Reactor Engineering, D. Van Nostrand Co., Inc., New York, 1963.

6. Utilization of Nuclear Power Plants in Underground Installations, Department of the Army (Office of the Chief of Engineers), Washington, EM 1110-345-950, 1963.

7. PM-3A Nuclear Power Plant Operating Manual, Martin Nuclear Division, Baltimore, Md., 1961.

8. Hazards Summary Report for the MH-1A Floating Nuclear Power Plant, Martin Nuclear Division, Baltimore, Md., Vols I and II, 1963.

9. "Now: A Modular Nuclear Power Plant," ALCO Review, pp. 10-19, Spring-Summer 1960.

10. Hazards Summary Report for a Prepackaged Nuclear Power Plant for an Ice Cap Location (PM-2A), ALCO Products, Inc., Schenectady, NY, APAE No. 49, 1961.

11. Hazards Summary Report for the Army Package Power Reactor (APPR-1A), ALCO Products, Inc., Schenectady, NY, APAE No. 13, Vol I, 1956.

12. Hazards Summary Report for the Army Package Power Reactor (SM-1), ALCO Products, Inc., Schenectady, NY, APAE No. 2 (Rev. 1), 1960.

13. Transportability Studies--ML-1 Nuclear Power Plant, Aerojet-General, San Ramon, Calif., IDO-28555, 1960.

14. Final Hazards Summary Report--ML-1 Nuclear Power Plant, Aerojet-General, San Ramon, Calif., IDO-28560, 1960.