UNCLASSIFIED

AD NUMBER	
AD516964	
CLASSIFICATION CHANGES	
TO:	**UNCLASSIFIED**
FROM:	**CONFIDENTIAL**
LIMITATION CHANGES	
TO: **Approved for public release; distribution is unlimited.**	
FROM: **Distribution authorized to U.S. Gov't. agencies and their contractors; Administrative/Operational Use; 31 AUG 1971. Other requests shall be referred to Office of the Adjutant General (Army), Washington, DC 20310.**	
AUTHORITY	
AGO ltr 9 May 1975 ; AGO ltr 9 May 1975	

THIS PAGE IS UNCLASSIFIED

UNCLASSIFIED

AD 516 964

CLASSIFICATION CHANGED
TO: UNCLASSIFIED
FROM: CONFIDENTIAL
AUTHORITY: AGC, D/A
ltr.
9 May 75

UNCLASSIFIED

THIS REPORT HAS BEEN DELIMITED
AND CLEARED FOR PUBLIC RELEASE
UNDER DOD DIRECTIVE 5200.20 AND
NO RESTRICTIONS ARE IMPOSED UPON
ITS USE AND DISCLOSURE.

DISTRIBUTION STATEMENT A

APPROVED FOR PUBLIC RELEASE;
DISTRIBUTION UNLIMITED.

SECURITY MARKING

The classified or limited status of this report applies to each page, unless otherwise marked.
Separate page printouts MUST be marked accordingly.

THIS DOCUMENT CONTAINS INFORMATION AFFECTING THE NATIONAL DEFENSE OF THE UNITED STATES WITHIN THE MEANING OF THE ESPIONAGE LAWS, TITLE 18, U.S.C., SECTIONS 793 AND 794. THE TRANSMISSION OR THE REVELATION OF ITS CONTENTS IN ANY MANNER TO AN UNAUTHORIZED PERSON IS PROHIBITED BY LAW.

NOTICE: When government or other drawings, specifications or other data are used for any purpose other than in connection with a definitely related government procurement operation, the U.S. Government thereby incurs no responsibility, nor any obligation whatsoever; and the fact that the Government may have formulated, furnished, or in any way supplied the said drawings, specifications, or other data is not to be regarded by implication or otherwise as in any manner licensing the holder or any other person or corporation, or conveying any rights or permission to manufacture, use or sell any patented invention that may in any way be related thereto.

DISCLAIMER NOTICE

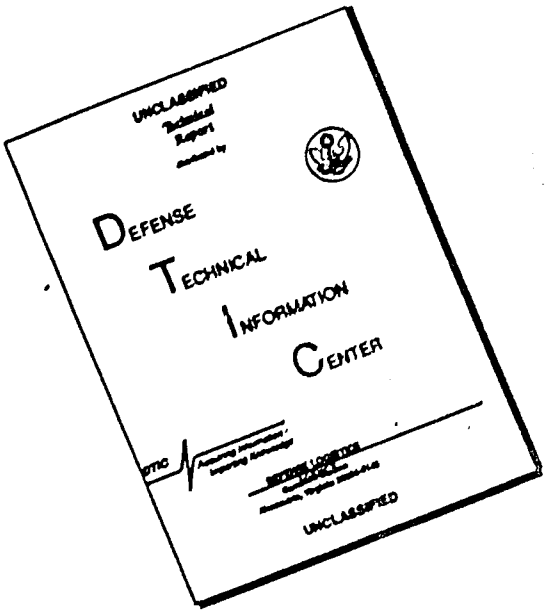

THIS DOCUMENT IS BEST QUALITY AVAILABLE. THE COPY FURNISHED TO DTIC CONTAINED A SIGNIFICANT NUMBER OF PAGES WHICH DO NOT REPRODUCE LEGIBLY.

AD 516964

DEPARTMENT OF THE ARMY
OFFICE OF THE ADJUTANT GENERAL
WASHINGTON, D.C. 20310

AGDA-A (M) (12 Aug 71) FOR OT UT 71B029 31 August 1971

SUBJECT: Senior Officer Debriefing Report: COL Charles E. Davis, CO, United States Army Support Command, Qui Nhon, Period 24 February thru 17 May 1971 (U)

SEE DISTRIBUTION

1. Reference: AR 1-26, dated 4 November 1966, subject, Senior Officer Debriefing Program. (U)

2. Transmitted herewith is the report of COL Charles E. Davis, subject as above.

3. This report is provided to insure appropriate benefits are realized from the experiences of the author. The report should be reviewed in accordance with paragraphs 3 and 5, AR 1-26; however, it should not be interpreted as the official view of the Department of the Army, or of any agency of the Department of the Army.

4. Information of actions initiated under provisions of AR 1-26, as a result of subject report should be provided to the Assistant Chief of Staff for Force Development, ATTN: FOR OT UT within 90 days of receipt of covering letter.

BY ORDER OF THE SECRETARY OF THE ARMY:

VERNE L. BOWERS
Major General, USA
The Adjutant General

DDC
RECEIVED
SEP 9 1971
A

1 Incl
as

DISTRIBUTION:
Commanding Generals
US Continental Army Command
US Army Combat Developments Command
Commandants
US Army War College
US Army Command and General Staff College
US Army Engineer School
US Army Ordnance School
US Army Quartermaster School
US Army Transportation School

(Continued on page 2)

Regraded unclassified when separated from classified inclosure.

DISTRIBUTION (Cont'd)

Copies furnished:
Office, Chief of Staff, US Army
Deputy Chiefs of Staff
Chief of Research and Development
Assistant Chiefs of Staff
Chief of Engineers
Chief of Military History
The Provost Marshal General
Office of the Joint Chiefs of Staff
Commanders in Chief
  Pacific
  US Army, Pacific
  US Army, Europe
  US Strike Command
Commanding Generals
  US Army, Alaska
Commander, US Army Forces Southern Command
Chief of Staff, USAF
Chief of Naval Operations
Commandant of the Marine Corps
Commandants
  Armed Forces Staff College
  Defense Intelligence School
  Industrial College of the Armed Forces
  The National War College
Defense Documentation Center
Commanding Officers
  US Army Land Warfare Laboratory
  US Army Logistics Doctrine, Systems & Readiness Agency
  US Army Mobility Equipment Research & Development Center

CONFIDENTIAL

DEPARTMENT OF THE ARMY
HEADQUARTERS UNITED STATES ARMY VIETNAM
APO SAN FRANCISCO 96375

AVHDO-DO

21 JUL 1971

SUBJECT: Senior Officer Debriefing Report - COL Charles E. Davis

Assistant Chief of Staff for Force Development
Department of the Army
Washington, D. C. 20310

1. Inclosed are three copies of the Senior Officer Debriefing Report prepared by COL Charles E. Davis. The report covers the period 24 February thru 17 May 1971 during which time COL Davis served as Commanding Officer, United States Army Support Command, Qui Nhon.

2. COL Davis is recommended as a guest speaker at appropriate service schools or joint colleges.

FOR THE COMMANDER:

1 Incl
as (Trip)
2 cy w/d HQ DA

GEDDES F. MACLAREN
CPT. INF.
Acting Asst Adjutant General

Regraded unclassified when separated from classified inclosure.

CONFIDENTIAL

5

DEPARTMENT OF THE ARMY
Headquarters, U.S. Army Support Command, Qui Nhon
APO San Francisco 96238

AVCF-CO 14 May 1971

SUBJECT: Senior Officer Debriefing Report, U.S. Army Support Command, Qui Nhon, for Period Ending 17 May 1971 (U)

Commanding General
United States Army Vietnam
ATTN: AVHGC-DST
APO San Francisco 96375

1. (U) References:

a. AR 1-26.

b. USARV Reg 1-3.

2. (U) The following report is submitted IAW references for the U.S. Army Support Command, Qui Nhon, for the period ending 17 May 1971. The period of my command of the USASUPCOM, QN was 24 Feb - 17 May 71. Most of the information provided herein pertains either to that period or for a limited period of time immediately preceding that period.

3. (U) The report is organized as follows. First, comments are provided based upon my personal observations and experiences, from a command level. Additional details are also provided in the Annexes attached on various areas, representing primarily USASUPCOM, QN staff input to this report. Further detailed information is also available in the quarterly Operational Reports of Lessons Learned (ORLL) submitted by this command.

4. (C) A brief statement of the USASUPCOM, QN current mission and charts depicting current command and staff organizations are provided at Annex B (Mission and Organization). Troops supported are presently slightly over 50,000 including primarily US Army, US Air Force and Republic of Korea Forces (ROKF). Also, logistical support is provided ARVN forces as required and where US resources are available to provide such support. This support to ARVN has been primarily transportation type including port and beach clearance and line haul.

FOR OT UT
71B029
Inclosure

DOWNGRADED AT 3 YEAR INTERVALS;
DECLASSIFIED AFTER 12 YEARS.
DOD DIR 5200.10

AVCF-CO 14 May 1971
SUBJECT: Senior Officer Debriefing Report, U.S. Army Support Command, Qui Nhon, for Period Ending 17 May 1971 (U)

5. (C) The primary mission of the USASUPCOM, QN is to provide logistical support to US and Free World Military Assistance Forces (FWMAF) operating within Military Region II (North). This has been a rapidly changing mission within the recent past because of the following primary factors:

a. Continuing drawdown and keystone of US units, e.g., the 4th Infantry Division.

b. Almost constant reorganization and relocation of remaining US units, both tactical and logistical, to adjust for changes in mission, the tactical situation and drawdown of other US units.

c. The changing nature of the political as well as the military (both tactical and logistical) situation within MR II (N) and in particular within Binh Dinh Province and the Qui Nhon City area.

d. The diversion of significant numbers of troop units and personnel on normally extremely short notice from this command to support military operations in MR I during the January - March 1971 timeframe.

6. (C) The tactical situation, especially enemy activities, has not been favorable to logistical operations. The present enemy order of battle (EOB) within the Qui Nhon Defense Installation (QNDI) area is attached at Annex C. In the Qui Nhon area the enemy has three local force battalions and several independent companies. In Qui Nhon City proper there are between 150 and 200 legal VCI and many sympathizers. These VCI provide information, early warning and financial support to the local VC. The enemy can and does interdict our primary lines of communication (Highways QL-1 and QL-19 and the Vietnamese railway between Qui Nhon and Tuy Hoa), doing so on QL-19 with forces from the two NVA Battalions located between Binh Khe and Pleiku. The most pressing problem for the VC at this time is the resupply of units with food, arms, and supplies. To collect and store sufficient quantities of the rice now being harvested, large portions of local forces are required in the collecting and transporting operations, thus relieving some enemy pressure. In the past six months the level of enemy activity in the QNDI area has continued to decline and indications point to a continuance of the decline as more US forces pull out. However, with the withdrawal of US units (primarily tactical), there is an increased requirement for logistical units to assume increased tactical and local security responsibilities. Theoretically, tactical and local security is to be assumed by ARVN or other local RVN forces as US tactical units withdraw, but experience has shown that this arrangement has not been completely successful.

AVCF-CC 14 May 1971
SUBJECT: Senior Officer Debriefing Report, U.S. Army Support Command, Qui Nhon, for Period Ending 17 May 1971 (U)

7. (C) An additional and severely complicating factor in our operations has been the socio-political climate and forces or influences existing in the Qui Nhon City and Binh Dinh Province area. This situation results from many factors such as the historic, persistent and deeply rooted sympathy and active participation of a large segment of the Binh Dinh Province population towards the VC movement; the fundamental nature of the VC guerilla type movement and ideology which exploits all possible courses of action, whether it be political, military, economic, social and the like to seek victory; and the rapidly changing complexion of the social, economic and political relationships and responsibilities resulting from the withdrawal of US forces and hopefully concurrent assumption of responsibilities and authority by both RVN governmental and local organizations. The primary impact of this situation upon our mission has been three-fold. First, this problem area has demanded an inordinate expenditure of time, effort and resources by all elements throughout the command, including command, staff and operating personnel. This requirement has resulted in significant but unavoidable diversion of effort from the normal logistical mission. Second, the nature of our security problem has been extremely complicated and difficult to deal with and control effectively. In addition to the threat of enemy attack, the problem of physical security of installations and property has become an extremely delicate problem. In order to avoid incidents which may not only seriously strain US-Vietnamese relationships but which may also seriously jeopardize the control and authority of the RVN and local governmental organizations, severe restraints have been placed upon the use of weapons and other options normally available to US security personnel. This has posed a very difficult balance to achieve between a minimum level of security that can be accepted for US personnel and facilities while at the same time minimizing the risk of incidents which may escalate into a serious problem. The third impact has been the effect of necessary restrictions imposed upon the morale of US personnel. Generally, all US personnel have responded well towards these restrictions, especially when the reasons for them were explained. However, even though a majority of US troops have accepted the current situation, it has been understandably difficult for many to accept the contradictory nature of the situation, i.e., the fact that US troops are in RVN to assist in the military effort; that they are restricted from the use of weapons which normally are used within a combat zone against a hostile and active enemy: and that the US forces are in many respects constrained against an element of the local populace which exploits incidents involving the US forces. From the above, it should be quite evident that the situation within which US forces are operating at this time has measurably changed from that of six to nine months ago and earlier where the conduct and support of tactical or combat operations was of primary and essentially the only concern--to the present climate which requires major adjustments and accommodations by

US forces to the emerging social, economic and political environment. At the same time and despite the major diversion of attention and effort to this new dimension, the logistical support mission must continue.

8. (C) The major involvement of this command into the local social and political environment has resulted primarily because of the additional responsibility which the CO, USASUPCOM, QN has as Installation Coordinator for the QNDI area. For this purpose, the CO, USASUPCOM, QN is responsible through command channels which follow MACV organization structure and command channels. For installation coordination purposes, the next higher headquarters above USASUPCOM, QN include CG, 173d Airborne Brigade and CG, Second Regional Assistance Command (SRAC) (formerly IFFV). As the social and political environment within the QNDI area changed with increasing concern and effort being devoted to local problems, there was a parallel and almost precipitous major increase in command emphasis from all higher headquarters upon this area of responsibility, certainly relative to the command emphasis being placed upon the logistical portion of the mission. As the installation responsibilities of the CO, USASUPCOM, QN increased, so did his authority and control over all military units and activities (including USN, USAF, etc.), both subordinate and tenant units, in the QNDI area regardless of their normal command channels. In many respects, installation coordinator requirements have taken priority over command channel prerogatives and authority. On the average, both subordinate and tenant units have responded well and in an objective and constructive manner to requirements established through installation coordinator channels.

9. (C) Significant observations have resulted from this situation wherein the CO, USASUPCOM, QN has had to assume responsibility and control of practically all activities within the QNDI area. First, classical chain of command relationships have been altered. In practice, the CO, USASUPCOM, QN has received directives and requirements not from a single higher headquarters, but rather from numerous higher command levels, e.g., CG, 173d Airborne Brigade; CG, SRAC; ADCG, USARV for Materiel; and DCG, USARV. The second observation relates to the appropriate division of responsibilities of the CO, USASUPCOM, QN and the MACV advisory elements within the QNDI area. By direction of higher headquarters, the CO, USASUPCOM, QN has been given the responsibility for many activities which could be the responsibility of MACV organizations. The third observation is that the requirement for an increased civil affairs type of staff capability exceeded the number and qualifications of personnel originally authorized the support command staff. It was necessary to augment the USASUPCOM, QN staff with personnel specially qualified in civil affairs, community relations and similar or related areas.

AVCF-CO 14 May 1971
SUBJECT: Senior Officer Debriefing Report, U.S. Army Support Command, Qui Nhon, for Period Ending 17 May 1971 (U)

10. (C) As is shown by the comments thus far, it is evident that the installation coordinator activities required a considerable portion of our effort. There were, however, some specific problem areas encountered in the logistical portion of our mission, which warrant consideration as follows:

a. Non-availability of Keystone planning information on a timely basis to all key staff personnel requiring such information for effective planning.

b. Lack of timely, coordinated and reliable information on tactical operational requirements requiring special logistical support. Frequently, such information was either never provided this command or was provided after such operations had actually started.

c. Non-availability of long range planning information and data needed for sound logistical support planning. Too many actions in planning for future logistical support had to be made or taken with incomplete planning guidance. The result was in some instances inadequate support with personnel and unit turbulence.

d. Misuse of Tables of Organization and Equipment (TOE). The Department of the Army has expended over a long period of time extensive resources in developing TOEs for all types of troop units. However, within the USARV combat environment, apparently such TOEs are not applicable or usable. Here we have young and relatively inexperienced unit commanders and personnel working and expending effort to develop MTOEs to match their mission requirements rather than permitting them to concentrate on what should be their primary concern, i.e., providing effective logistical support to supported units. MTOEs are being initiated by personnel who lack the experience to do the job; who are fully burdened with day-to-day operational requirements; and whose mission invariably changes.

11. (C) My final comments relate to the problems of command in the current Vietnam environment, especially at company and comparable size unit level. USARV has recently established a policy of retaining commanders in their assignment for their entire Vietnam tour wherever possible. This policy can only result in improved unit stability, morale and performance. Equally important, however, are the criteria used for selection of officers for command assignments. It too frequently appears that commanders have been selected on the basis of individual officer career development purposes rather than on demonstrated qualifications for command. A command assignment in a combat theater such as Vietnam should be based upon proven ability

AVCF-CO 14 May 1971
SUBJECT: Senior Officer Debriefing Report, U.S. Army Support Command, Qui Nhon, for Period Ending 17 May 1971 (U)

and not as a stepping stone for career advancement. The primary difficulties of command exist at the company level. Most company grade and some field grade officers lack the professional experience and motivation to cope with the complex problems and responsibilities normally encountered by a commander in the present Vietnam environment. This is especially true in a combat service support type of unit whose logistic mission is complex and everchanging, and command-type leadership with its essential discipline is relegated to secondary importance. Of all problems encountered I believe this area is the most critical and one which must receive a major and concerted effort throughout the Army. The normal training and schooling which the average officer now receives simply does not prepare him for this situation.

Charles E. Davis

5 Incl
Annexes to Report

CHARLES E. DAVIS
Colonel, AR
Commanding

ANNEX A (Index of Annexes) to Senior Officer Debriefing Report

ANNEX A - Index of Annexes

ANNEX B - Mission and Organization

ANNEX C - Intelligence and Security

1. Enemy Order of Battle (EOB)

2. Dufflebag Program

3. Security and Combat Security

ANNEX D - Logistics

1. Plans & Operations

2. Supply

3. Maintenance

4. Transportation

5. Services

ANNEX E - Engineer

ANNEX B (Mission and Organization) to Senior Officer Debriefing Report

1. Mission - Provide logistical support and water terminal service to U.S. Army and other U.S. forces and Free World Forces, as directed, in the Military Region II (N) area of the Republic of Vietnam, except for:

a. Missles

b. Medical Supply

c. Cryptographic Equipment

d. Aircraft Supply and Maintenance

e. Higher Echelon Watercraft Maintenance

2. (C) Organization, US Army Support Command, Qui Nhon (U) - Page B-2

3. (C) Organization, Headquarters, US Army Support Command, Qui Nhon (U) - Page B-3

ORGANIZATION OF THE USASUPCOM, QN
FOR PERIOD 24 FEB 71 TO 17 MAY 71

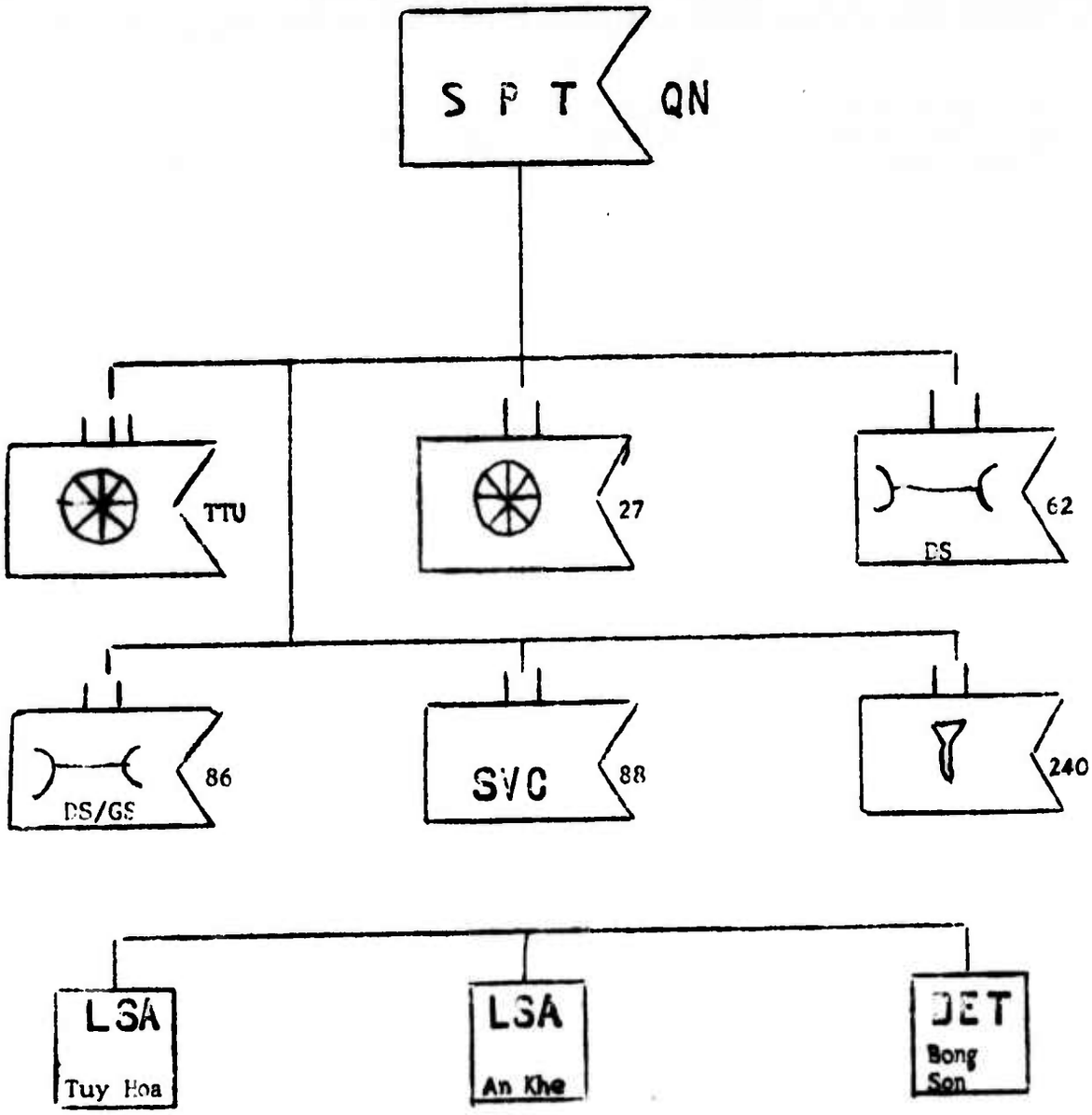

ORGANIZATION OF HQ, USASUPCOM, ON
FOR PERIOD 24 FEB 71 TO 17 MAY 71

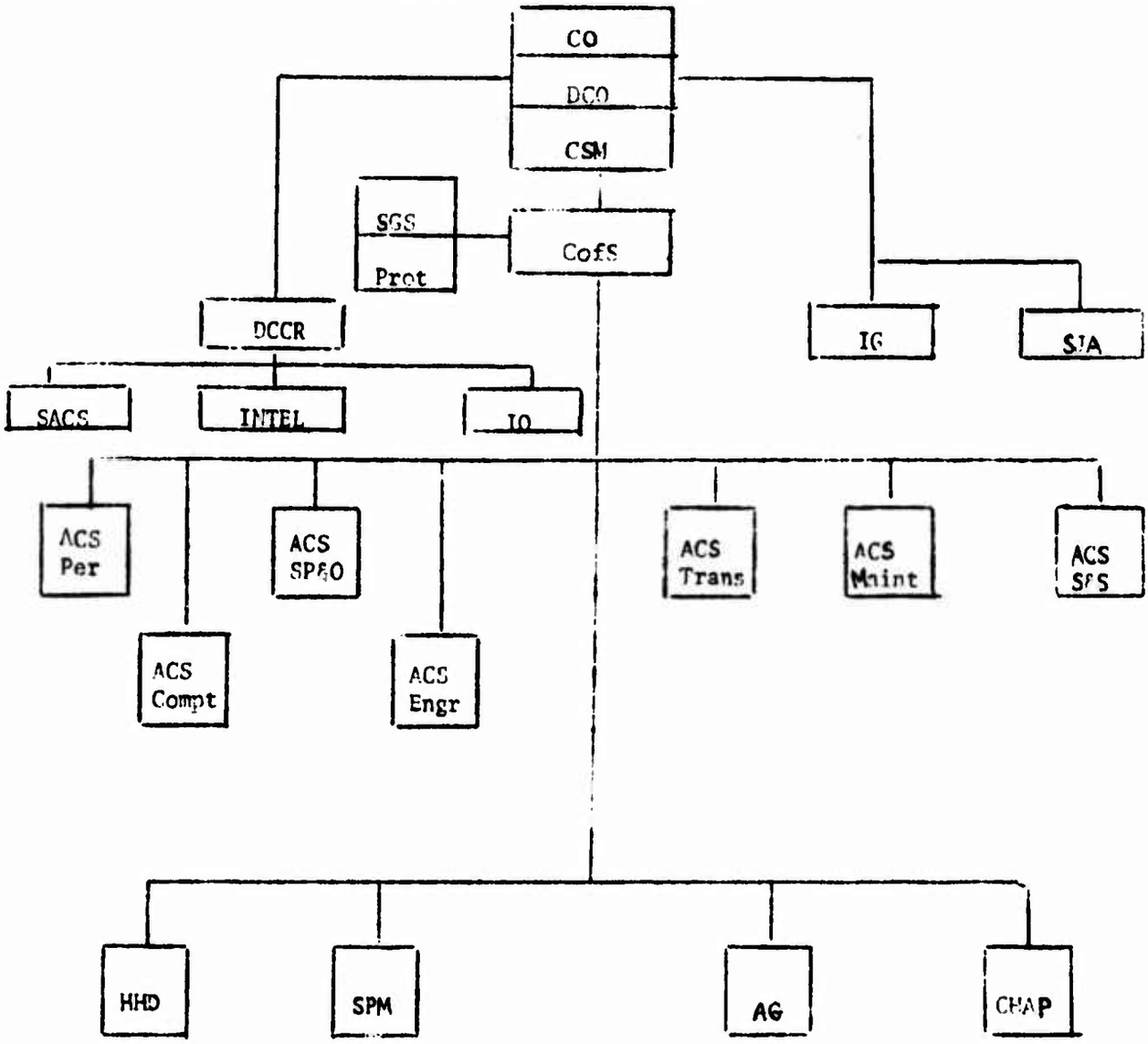

ANNEX C (Intelligence and Security) to Senior Officer Debriefing Report

1. (C) Enemy Order of Battle (EOB).

a. In the Qui Nhon Defense Installation (QNDI) area there are three local force battalions and several independent companies. These battalion size units are under the control of VC Military Region Five (MR-5), with the controlling element for the QNDI area located in the base area 226, near the Soui Cai Valley northwest of Phu Cat.

b. The E2B Battalion, located to the north of Qui Nhon, in both the An Nhon and Tuy Phouc Districts, has a strength of approximately 130 men, organized into three companies and a headquarters element. This unit is armed with two 82mm mortars, B-40s, B-41s and small arms. The E210 Battalion, with a strength of approximately 200 men, is located north and south of the Cha Rang Valley and QL-1 on the east to Binh Khe on the west. This battalion is organized into three line companies, one weapons company, and a headquarters element. Weapons carried by this battalion include four 82mm mortars, two 60mm mortars and two 57mm recoilless rifles, as well as B-40s, B-41s and small arms, The largest battalion of the three is the 300th Sapper Battalion. It was originally organized into five line companies and 220 men. This sapper battalion carried two 82mm mortars, many B-40s and B-41s, small arms and plastic explosives. Their area of operation is south and west of Qui Nhon, but are also responsible for attacks by fire on Qui Nhon. There are two independent companies based on the peninsula east of Qui Nhon. One of these units, the D-30 Company, has approximately 20 men armed with small arms. The other unit operating from the peninsula is the 598th Underwater Demolition Company. The strength for this underwater sapper unit is only about 12 men. While small in number this unit poses a great threat to the Qui Nhon harbor because they are equipped with scuba gear and large quantities of plastic explosives.

c. In the Qui Nhon City proper there are between 150 and 200 legal VCI and many more sympathizers. These VCI provide information, early warning, and financial support to the local VC. The Qui Nhon City Committee has a small local sapper unit of approximately 15 to 20 men and women equipped with hand grenades, claymores, and plastic explosives. This group is responsible for the terrorist attacks made on theaters, vehicles and GVN offices in Qui Nhon.

d. In the QNDI area the enemy has the capability to interdict lines of communication with convoy ambushes and mining incidents on QL-1 as well as the Vietnamese railroad line from Qui Nhon to Tuy Hoa.

ANNEX C (Intelligence and Security) to Senior Officer Debriefing Report

e. Between Binh Khe and Pleiku there are three NVA Battalions, the 6th and the 4th Battalions of the 12th NVA Regiment, and the 2nd Battalion of the 95B Regiment. Each battalion has an approximate strength of 300 men and is equipped with 82mm and 60mm mortars, 57mm recoilless rifles, light machine guns, B-40s, B-41s, and small arms. They are capable of ambushing convoys along QL-19 and are only limited by the amount of supplies they are receiving from the VC supply units in BA 226. These units keep a constant surveillance on QL-19 and often attack convoys from prepared positions near the highway.

f. The enemy in Tuy Phouc and An Nhon Districts is capable of conducting limited ground attacks, primarily against GVN forces. Stand off mortar attacks are still the greatest threat to US and GVN installations. The enemy does have the trained personnel and necessary equipment/explosives to conduct sapper attacks throughout the area to include Qui Nhon City installations. The local VC conduct terrorist attacks against GVN officials and their families, through assassinations and abductions. By means of these attacks, the VC are able to influence the majority of the local population; yet the majority of the population is considered to be under GVN control. There is a substantial minority of the population which can be considered true sympathizers, but for the most part VC control and influence is exercised through fear.

g. The most pressing problem for the VC at this time is the resupply of local units with food, arms, and supplies. As the rice Spring harvest continues to come in, the VC must collect and store vast quantities of rice to last until the next harvest. This means that a large portion of the local forces must be used in collecting and transporting rice, thus relieving part of the enemy pressure on Qui Nhon.

h. In the past six months the enemy level of activity in the QNDI area has continued to decline. There is no concrete evidence to disprove the continuance of this decline in activity. There are indications, however, of the enemy attempting to win control of the area by legal means. This could only be accomplished through the August elections. If this tactic fails, and the US troop strength continues to decline, an increase in all forms of attacks is highly probable.

2. (C) Dufflebag Program.

a. The Qui Nhon Support Command Unattended Ground Sensor (UGS) program, initiated in the Spring of 1970, has grown to 300 sensors implanted in ten defensive fields supporting the security of support command units in the Qui Nhon area, covering 150 sq km, and the Pleiku area, covering 75 sq km.

ANNEX C (Intelligence and Security) to Senior Officer Debriefing Report

b. The Pleiku monitoring site, one of the six sites monitoring the ten defensive fields, is supervised by a representative from the office of the Special Assistant for Combat Security (SACS). The area contains thirteen active sensors which employ the seismic mode of target detection. Pleiku is also installing twenty balance pressure devices along the perimeter of the 62nd Maintenance Battalion Compound. More perimeter line sensors and numerous air-dropped sensors are programmed for Pleiku.

c. The primary monitoring site of the five sites located in the immediate Qui Nhon area is perched on Vung Chua Mountain, The monitored area encompasses the Phu Hau Peninsula, Hill 131, Vung Chua Mountain, and the USAF Cable Site area, Eleven types of sensors are employed on the peninsula and seven employed on Hill 131. They are programmed to detect seismic, acoustic and moving ferrous metal targets. The largest sensor field monitored by the Vung Chua site is Vung Chua Mountain proper employing 91 active sensors with plans for 10 additional perimeter line sensors in the near future. Better than 80 percent of the Vung Chua defensive area is covered by sensors from whence come 150 sensor activations per week with an average of four confirmed targets per week and two firings per night. Tank Farm #2, north of Vung Chua Mountain and the most vulnerable area in Qui Nhon area, has 78 sensors presently employed. These sensors track an average of three confirmed targets per week, detected by seismic, acoustic, ferrous metal and direct movement sensors. At the 27th Transportation Battalion Compound there are 32 sensors and east Ke Sein Mountain has 53 sensors. The fields on Ke Sein Mountain are being moved higher on the mountain and to the north to bring about more activations and target detections. The other two monitored areas in the Qui Nhon area are at Lane Army Heliport and at Market Time Naval Activity. These sensors come under Qui Nhon dufflebag supervision for equipment issue and assistance, but are operated by the respective commands.

d. A major aim of the dufflebag program is to extend its coverage while also consolidating activities wherever possible. Consolidation of the monitoring system will provide better command and control. Extensions of the program will include installation of a complete sensor field at the ARVN ASP. Ba Hoa Mountain has been chosen as the site for a centralized monitoring system. From this site Tank Farm #2, parts of Vung Chua, Hill 131, and the northern peninsula, and the ARVN ASP can be monitored. The Dufflebag Program is an active, ever expanding program that has provided the Qui Nhon Support Command with valuable defense support through use of unattended ground sensors. Its use should continue to expand in Qui Nhon Support Command, and its success indicates that the program should be implemented as widely as possible throughout Vietnam.

ANNEX C (Intelligence and Security) to Senior Officer Debriefing Report

3. (C) Security and Combat Security.

a. As the senior unit commander in the Qui Nhon area, CO, USASUPCOM, QN is also designated as the Installation Defense Coordinator with the responsibility for security for all units and elements in the Qui Nhon Defense Installation (QNDI) area. The QNDI area covers an area of approximately 150 sq km and is presently composed of one to as many as ten adjacent compounds. The senior unit commander is appointed the compound/complex commander and is responsible for the defense of the perimeter of his entire compound/complex.

b. CO, USASUPCOM, QN controls the individual compound/complexes through a Special Assistant for Combat Security/Deputy Installation Defense Coordinator (SACS/DIDC). The SACS/DIDC office is composed of a small staff to coordinate and advise all commanders in security matters. SACS also operates the Qui Nhon TOC which is colocated with the Binh Dinh Province TOC where liaison personnel from the ROKA, USAF, ARVN, and Provincial Forces are located. All requests for fire are processed through this agency. Constant coordination is conducted around the clock at the Qui Nhon TOC.

c. Limited security forces have been provided for the support command, presently consisting of two Infantry companies and a Security Guard Company, Due to the distances and terrain between the compound/complexes there is a requirement to conduct reconnaissance patrols, long range recon patrols, and night ambushes. This situation is pertinent only to the Qui Nhon Support Command. Binh Dinh Province Headquarters also provides one RF Company and fifteen PF Platoons to assist with the security of all units located within QNDI area.

d. The design of support command type activities and compounds should encompass the ability to expand or contract and not detract from the overall security requirement. All compounds should be designed for defense first and support function second. Special military units must be developed for the day to day guard requirements for all compounds, with the local tenant units being responsible for internal security.

ANNEX D (Logistics) to Senior Officer Debriefing Report

1. (C) Plans and Operations.

a. Plans

(1) The continuing reduction of forces in MR II (N) has required a great deal of advanced planning. Support forces had to be tailored according to the projected supported troop and equipment density. Since this information was so highly classified, it was difficult to staff proposed changes. Even after a Keystone increment was announced, major changes were made. Two such examples were the retention of 20th Engr Bn in the highlands, after the announcement had been made that the unit would redeploy. Secondly, the changes in the support requirements at An Khe should be noted. These changes required restructuring of support command units on a crash basis.

(2) Increasing security requirements have been a constant problem due to the time lag in disposing of property after departures of larger units. As installation coordinator, the CO, USASUPCOM, QN has had to assume responsibility for security of their compounds. The formation of provisional security units in Qui Nhon and Long My was required to augment the two TOE security companies. This condition is expected to continue.

(3) Scheduling of units into the Cha Rang processing center has been relatively easy during Increments VI and VII due to the small number and size of units. The largest unit processing through the center during this period was a self-propelled artillery battalion.

(4) Another factor complicating the planning function has been the future of this headquarters. The first plan was to make the command a sub-area command of USASUPCOM, CRB. Change one put Qui Nhon under USASUPCOM, DNG. This has again been changed to CRB and calls for eventual elimination of any support headquarters in Qui Nhon. Because of the time lag in approval of force structure changes, these many changes in concepts have made it almost impossible to finalize documents for the required units. For example, the TDA for a Qui Nhon installation detachment has been in a constant state of revision since November.

b. Operations

(1) The USASUPCOM, QN provides supply, maintenance and service support for the 54,000 troops deployed throughout its area of operations. The 600 mile net over which our convoys haul supplies has seen increased interdiction in March and April as the enemy initiated his H-3 Spring/Summer Campaigns. Enemy activity in the early part of this year has consisted, in part, of sixteen ambushes resulting in one US KIA and twelve WIA while

fifteen casualties were inflicted on the enemy. To protect men and equipment, QNSC has arranged for daily air cover, consisting of O-1 and gunship support on all POL convoys. This has also provided the additional benefit of covering many non-POL convoys. QNSC convoys average 700,000 miles/month while they haul 24,000 short tons of dry cargo and 5.1 million gallons of POL.

(2) POL issued to units in MR II (N) averages 10.9 million gallons per month of which 4.6 million is linehauled by the 27th Transportation Battalion and 3.5 million picked up or delivered locally. The remaining fuel is shipped by train, pipeline or commercial means. The principal POL customers are Pleiku, Tuy Hoa, and Phu Cat AFB, with Phu Cat receiving 43% of the total fuel. Due to a shortage of 5,000 gallon tankers within the support command and the resulting inability to keep up with stockage objectives, C-130 "bladder birds" were employed between 22 Apr and 14 May to haul an average of 40,000 gallons daily to Pleiku and Tuy Hoa.

(3) Throughout MR II (N) there are two ARVN Ammunition Supply Points (ASPs)--one at Qui Nhon and one at Pleiku, and one US ASP at LZ English in support of the 173d Airborne Brigade. These ASPs supply Class V for US (1850 tons/month average), ROK (2200 tons/month) and ARVN (1413 tons/month). This ammo arrives in deep draft vessels or LSTs. The deep draft vessels discharge their cargo to barges operated by the Han Jin Transportation Company contractor that transfers the ammo to the off-loading facility on the causeway at the port. From there it is linehauled to the ASPs or directly to the using units. LSTs land on the LST beach where the ammo is picked up for linehaul. Ammunition operations have been hampered by three enemy attacks in the Qui Nhon ASP, one each in January, February and April, resulting in a loss of more than $10,000,000 in Class V supply.

(4) From the 184,000 cubic feet of chill and freezer space the USASUPCOM, QN provides an average of 500 S/Tons of perishable Class I supplies per month. Also provided monthly are 8000 S/Tons of non-perishable foodstuffs.

(5) Keystone processing involved the USASUPCOM, QN in thirty-five unit standdowns, seventeen of which were QNSC units. This reduced the support command by 2080 spaces. The processing of 11,630 pieces of PEMA equipment took place in the 1 Jan - 30 Apr timeframe. The majority of that equipment came from the 5/16 FA Battalion and 1/503 Airborne Battalion.

(6) In the early months of 1971, QNSC supported special operations conducted by allied forces at Phu Nhon, Fire Support Base 6 and in NVA Base Area 226. These operations necessitated the establishment of forward

aviation rearm/refuel sites requiring Class V supplies in multiple artillery calibers and Army aircraft ordnance, and greatly increased quantities of fuel, mostly JP-4. The support planning was detailed and thoroughly coordinated between supporting and supported. Adequate stocks, to include sufficient safety levels, were safe-sided, and the operations were provided adequate support.

2. (C) Supply

a. Class I. There have been some problems in recent months in obtaining subsistence items especially perishables and MCIs. This was due to a cutback and delay in requisitioning by USARV to adjust to decreasing troop strengths. The unforeseen Laos operation was the cause of the shortage of these items plus USARV policy to maintain a 7 day safety level on perishable items rather than a 14 day safety level. USARV has changed their policy to a 28 day stockage objective and a 14 day safety level. Recommended improvements in the overall management of Class I operations are as follows:

(1) Place more emphasis on the status of individual commodities rather than an overall look at days of rations on hand. A depot could have twenty (20) days of A-Rations on hand but that twenty days may all be two or three commodities. Days of rations on hand does not necessarily indicate the excesses or critical shortages of individual items.

(2) Establish a set policy between USARV and depots in regard to safety levels and stockage objectives. Once the levels are established they should not fluctuate from one requisition period to another. Fluctuation of these objectives causes needless special requisitions or cancellations. It is recommended that a 14 day safety level and a 21 day stockage objective for perishables be maintained.

(3) Require closer monitoring of inter-depot transfers to preclude the shipment of the same items back and forth between depots. This should be exercised for both perishables and non-perishables. There have been instances where one depot ships an item to another depot and a week later the item is replenished in the shipping depot by one of the other depots.

(4) Change policy to preclude USARV requisitioning a different quantity of an item from that which was computed on the depot's worksheet without coordination with the depot concerned. Many times the depot thinks they have a certain quantity on requisition or on inter-depot transfer and when the DFU arrives it is for a different quantity.

(5) Attempt to distribute program factors to depots as early in the month as possible and avoid making last minute changes for that particular requisitioning period. A lot of time is lost by depots having to manually recompute their requirements for a few hundred difference in the program factor.

(6) Include weights on stock status print out for items not issued by pounds, thereby assisting depots in arriving at more accurate evaluations of tonnages on hand.

b. Class V

(1) ARVNization of Class V Activities.

(a) Beginning in April 1970 actions were initiated to reduce the number of logistics troops involved in Class V support in MR II (N). By September 1970 all US Class V stocks at Pleiku were transferred to ARVN, and ARVN assumed support of residual US units in Pleiku and Kontum provinces with only a US liaison team of three men. The liaison team is necessary to assist using units with issues, control allocated items, and prevent issue of suspended ammunition. Issues to US units are a loan to be repaid round for round from US stocks at Cam Ranh Bay. Repayment takes from 10 days to as much as three weeks. There have been very few problems with the system. What problems do exist have resulted primarily from the delay time for repayment through the US system caused by unanticipated high issues. Using units have begun to recognize the need to anticipate and establish requirements so that shipments can be requested in advance.

(b) In January 1971 all US ammunition in Qui Nhon was transferred to ARVN, and the same system implemented to supply US units in this area. As Qui Nhon must provide some GS level support to Pleiku and to the remaining US ASP at LZ English in addition to direct support of units in the Qui Nhon area, the liaison team is larger and includes some MHE equipment.

(c) This transfer of support to ARVN has resulted in the elimination of three US ASPs, one battalion headquarters, two and two-thirds ammo companies, and ASP security forces.

(d) The ARVN issue is very similar to the US system used in the past and it is slow to react. ARVN ammunition personnel use many more forms than the present US system and spend a lot of time rechecking for accuracy. This requires that a request be submitted three to five days prior to the desired date of issue. ARVN personnel are very suspicious of high pressure salesmanship so that reductions of that time frame can be accomplished only in

emergencies. It is important that US personnel involved in Class V support by ARVN understand the ARVN system and work with it. US units can be successfully supported by ARVN Class V activities with very little assistance. However, US personnel used in liaison capacities with ARVN must be carefully chosen with as much emphasis on their ability to tactfully deal with others as on their technical qualifications.

(2) Management of Small Stockage Objectives.

(a) In order to have a balanced reduction of logistical forces, QNSC has made use of the "Inventory in Motion" concept for Class V support. The principle is to keep a minimum stockage on the ground with daily receipts equaling daily issues. When the balance on hand tonnage can be held relatively constant, stockage objectives can be reduced to the point where some items are stocked much below the issues for a requisition cycle.

(b) Beginning in April 1970, emphasis was shifted from large deep-draft shipments to frequent shallow-draft shipments using the RO/RO (SLAM) system to optimize thru-put. By mid-summer deep-draft shipments were eliminated and trailers were being moved with 70 to 80% thru-put pegging the requisition cycle at ten to fifteen days. The system required dedicated transportation assets and was strongly opposed by Military Sealift Command.

(c) In January 1971 an attack against the Qui Nhon ARVN Ammo Depot resulted in the need for temporary storage facilities. A deep-draft vessel was used to bring in a basic stock and serve as a temporary ASP. Since that time receipts have been limited primarily to deep-draft and full LST loads of approximately 1,000 S/T. The requisition cycle is now fifteen to twenty days. Since the total storage space available for support of US units is only capable of holding about 6,000 S/T, the balance on hand becomes subject to fluctuations of over 20% and frequent zero-balances occur.

(d) Small stockage objectives must be subject to thorough intensive management for all high turn over items. Issues must be anticipated and requisitions submitted frequently so that receipts will cover issues while maintaining a constant balance. Many low turn over items become special order items and must be requested in advance.

(e) Adequate Class V support in MR II (N) is dependent upon intensive management of frequent small shipments from a base depot such as Cam Ranh Bay. Timeliness of shipments is a most essential element of a smooth system. This system needs dedicated water transportation assets to support units in this area. Such assets could be in the form of a fleet of small vessels of the LCU class or guaranteed space on LSTs at two to four day intervals.

ANNEX D (Logistics) to Senior Officer Debriefing Report

(3) Planning of Combat Operations.

(a) Recent demands placed upon the Class V system by units involved in combat operations in MR II (N) indicate that there is little prior logistics planning.

(b) The time from submission of a request to USARV until delivery of ammunition at Qui Nhon harbor is at least fifteen days. Most high turn over items are stocked at a 15 to 20 day normal usage level and requisitions are based upon that usage. Combat operations often double expenditures. Before the system can react to unanticipated expenditures the entire stockage is drawn down and units can only be supported by combat essential resupply using premium transportation.

(c) It is essential that ammunition requirements be projected as early as possible in the planning of a combat operation and that anticipated expenditure rates be adjusted as new information becomes available. Combat units must plan ammunition expenditures and should be informed as to the limits of the supply system and to what degree they must predict expenditures. Units also must understand the possible problems that can develop when ammunition is over-requisitioned. The vulnerability of an overstocked ASP may result in no ammunition at all.

c. Excess Station Returns.

(1) Prior to the phase-out of USAD-QNH, all SCRAM I and II items were turned in to USAD-QNH where SCRAM I items were job ordered to Vinnell Care and Preservation Facility (C&P), if required, and returned to depot stocks. SCRAM II items were picked up on the ABF as unserviceable and job ordered to CC&S and PDO. After the phase-out of USAD-QNH there were no problems with SCRAM III and IV equipment. However, a major problem developed in processing SCRAM I and II excess station returns from customer units, in that all SCRAM I items are repaired to be placed in A/A pack prior to shipment. This is a depot function which is beyond the capability of DSUs. The problem with SCRAM II items is even more complex. SCRAM II assets must be job ordered to maintenance by QNSC, packed into A/A condition and then shipped. This places an inordinate burden upon DSUs which must maintain records while the item is on job order to maintenance and Vinnell C&P prior to shipment.

(2) The Qui Nhon Holding Detachment (QNHD) was a provisional unit formed from available assets and spaces of USAD-QNH to process the turn in of vehicles upon closure of the Vinnell Class VII yard on 1 Nov 70. The initial

intent was to have this organization only process paperwork in order to give visibility of vehicular assets on the USAD-CRB AFB so that ICCV disposition could be obtained prior to shipment to depot stocks in CRB. This has resulted in the issue of many of the items in place and the shipment of very few items to other than CRB. The mission of the QNHD was expanded to process the heavy volume of Keystone assets generated during Keystone Robin Bravo.

(3) Originally ten (10) enlisted men were assigned to the QNHD. As Keystone assets began to flow in, one (1) officer and twenty-two (22) additional enlisted men were required to handle the workload. Instead of the operation being a paper exercise it now involved the USAD-CRB functions of receipt, inspection, accounting, storage, packing and crating, issue and shipment of all Keystone and vehicular assets. The packing and crating capability was obtained by use of a portion of the Vinnell C&P at USAD-QNH.

(4) Such a provisional unit cannot assume a depot mission for all excess station returns in addition to its original mission without extensive depot-like staffing. Items should be adequately packed to prevent damage in shipment. SCRAM I and II items could be turned in to the supporting DSU. Excesses would be reported via FTE cards for disposition instructions. Shipments would be made from the DSUs to the designated depot or offshore. Depots would have the responsibility of placing the item in A/A pack prior to returning it to depot stock.

d. Increase in Order and Ship Time (OST).

(1) Another problem with the transfer of the supporting depot was the increased OST to our DSUs. This was obviously caused by the greater distance between the depot and DSUs and by the fact there was no dedicated transportation to service the DSUs in the Qui Nhon area.

(2) When USAD-QNH phased down, DSUs were authorized to requisition an additional 60 days of supplies to cover the transition period when support shifted. This was good in theory but in many cases the depot did not have 60 days of supply to issue to customers. If a given line were on the ASL of all three Supply and Service Companies, depot definitely did not have enough supplies to issue 60 days worth to each unit.

(3) There was an initial backlog of supplies due to the lack of transportation. A study was conducted and it was determined that the OST for a priority 12 replenishment requisition was over 60 days for each DSU. The RO for a DSU is 60 days of supply, so as fast as supplies were being recieved they were being issued. DSUs were not able to get ASL lines in stock to fill customer requests.

(4) The OST for DSUs should be increased to 60 days when computing their ROs. This has been proposed to USARV. The increased RO would give the DSUs a chance to have more ASL lines in stock. The amount of stock on the ground would not change from the current 30 days operating level and 15 days safety level. The increased RO would put more supplies in the transportation system and be like an inventory in motion. At the same time it is recommended that a dedicated shuttle ship be provided between CRB and QNH to cut down the transportation time and help move critical items of supply to QN units on a regular basis.

e. Keystone and Retrograde.

(1) Keystone Processing

(a) Of major impact to this support command during Keystone processing was the acceptance, disposition and disposal of Post, Camp and Station (PCS) property. To assist in turn in of the 4th Infantry Division property this support command established a PCS turn in point at An Khe. While this acceptance point was beneficial to the 4th Inf Div, it definitely caused problems for the support command. The primary problem was the availability of transportation to back haul items classified as PDO collected at An Khe. Furthermore, the economics of moving such items as wall lockers, wooden foot lockers, bookcases, and desks was not favorable. The figures listed below illustrate the problem:

TYPE VEH	COST/TON MILE	MILES (AN KHE to QNH)	TOTAL COST
2 1/2 T	$ .63	56	$35.28
5 ton	$ .50	56	$28.00
12 T S&P	$ .28	56	$15.68

Based on a PDO cost of a wall locker at a rate of $ .01 per pound as light scrap, and an estimated weight of 40 pounds per locker, it costs $ .40 to move one locker. Taking the same type vehicle and estimating loads one can figure out a PDO value per shipment which is as follows:

TYPE VEH	LOAD CAPABILITY (NR OF LOCKERS)	PDO VALUE
2 1/2 T	25	$10.00
5 ton	40	$16.00
12 T S&P	56	$22.40

Only in the case of utilizing 12 Ton S&Ps was it economical to move wall lockers. The $6.72 net gain does not take into account any PDO costs such

as storage, processing, handling, or selling of the wall lockers which are accrued when the lockers reach QNH. These costs reduce the PDO value of 56 wall lockers to zero. If PDO could sell items such as wall lockers, foot lockers, etc., as an item, the economics would balance in favor of getting the item down to QNH, but during the processing careless handling by personnel anxious to leave reduces the items to a near scrap condition. The banding and rough roads, which are other transportation problems, tend to further reduce an item to scrap by the time it reaches QNH.

(b) The problem of PCS property will become more acute as the US withdrawal rate is stepped up. The value of a great percentage of the PCS property has declined by fair wear and tear past the point where it is economically unfeasible to retrograde it out of RVN. A possible solution to the problem might be to have all PCS left in place, and, when ARVN forces take over a compound, have them sign for the PCS as a part of the property transfer documents. A second and more costly solution to the problem is to establish a central sale area in each SUPCOM, bring all the PCS to these central areas where adequate storage facilities are located, limit withdrawal of items by US, ARVN, and other sources, and sell the PCS as items. Once the property has been sold require the buyer to assume responsibility for security and transportation of the property out of the area.

(2) The Keystone ARVN Transfer Program.

(a) The USASUPCOM, QN processed 4886 items for transfer to ARVN forces under Keystone Bravo. A general breakout of the items is as follows:

ITEM	TOTAL OFFERED	ACCEPTED	REJECTED
Weapons (1677)	1219	1145	74
COMMEL (2617)	472	407	65
Vehicle (523)	103	85	18
Engr (69)	5	2	3

All ARVN equipment designated for transfer to ARVN forces must be routed through maintenance shops to complete all work requirements including organizational maintenance work. All Keystone ARVN designated equipment at Qui Nhon was job ordered into the 86th Maint Bn to bring the equipment to ARVN acceptance standards which are higher than US in-country rebuild standards and in some cases, higher than US Depot issue criteria. This large influx of equipment into the 86th Maint Bn created a serious backlog of work and reduced the capability of the 86th to support US units in the field. In Dec 70, USARV took action to divert a portion of the backlog of ARVN items to Cam Ranh Bay for repair and issue to ARVN at CRB. This accounts for the differences of assets in the transfer figures. Delays in issuing to ARVN are attributed to shortages in the US supply system of BII for COMMEL and

vehicles. ARVN will not accept items without BII, whereas US units must accept similar items from depots that are short BII. There is an RVN shortage of COMMEL items such as power supplies, hand sets of all types, antennas, and RT/RF cables. The limited parts received are placed on US orders waiting repair to keep up with customer requirements.

(b) To avoid delays it is recommended that a single or multiple maintenance units be established in RVN, whose sole mission is to repair and transfer all ARVN candidates. Centralized management would standardize procedures and reduce confusion in acceptance criteria by ARVN. Supply management could be directed to give these units a specific portion of critical repair parts so a steady turnover could take place. To require SUPCOM DS/GS units to keep up with US support missions plus prepare ARVN transfers is too large of a task for current TO&Es. A dedicated ARVN maintenance facility would benefit both ARVN and US needs.

3. (C) Maintenance.

a. Special Criteria for Retrograde of Army Material (SCRAM). One of the most successful programs used in the QNSC is " Special Criteria for Retorgrade of Army Material (SCRAM)." This system provides for rapid inspection and classification of a large volume of material. The codes are clearly spelled out and are designed for use by personnel of all levels of experience in SCRAM coding an item. This has been one of the major contributing factors in the rapid repair of equipment. This system gets the equipment to the supporting unit that has the capability to repair it in a short period of time, thus alleviating congestion at lower levels of maintenance. The success of the program nominates it for strong consideration with a view toward significant expansion and possible implementation in other theaters of operation.

b. TOEs for Maintenance Units.

(1) TOEs for DS and GS maintenance units established by DA allow adequate maintenance personnel to give a reasonable response to the needs of the supported units with the exception of technical supply. What the TOE does not cover is the loss of personnel for local tactical and physical security requirements. The TOEs on the average have 25% of the personnel authorized in supervisory positions. Thirty three percent of the E5s and below are actually lost to security commitment. This situation has drastically affected the repair capability of the DS/GS support units. Allowances must be made in the development of TOEs for loss in productivity because of security requirements.

ANNEX D (Logistics) to Senior Officer Debriefing Report

(2) One of the major problem areas encountered by this command is the technical supply activities. The technical supply is the heart of the logistical operation. Its malfunction means a malfunctioning system. The problem has not only been obtaining the quantity of personnel authorized but also in obtaining a sufficient quantity of personnel qualified to perform this task. It is recommended that either additional spaces be allocated to the technical supply activity or that the prerequisites for personnel entering these MOS's be increased. There should be at least one 34D20 in the grade of E6 and the criteria for selection to 76A10 should be raised.

c. Repair and Return (R&R) of Unserviceable Items. The repair and return system has been one of the most beneficial yet unsuccessful programs this command has used. While it did take the workload off the DS/GS shops, the turn around time in many cases was so long that the supported units sometimes had as much as 50% of an end item denied to them due to the fact that they were out of country. Experience has shown that the turn around time for R&R items runs from 45 days to 6 months although the average is 2 to 2 ½ months. While this program is based on sound factors, consideration should be given to either significantly improving the turn around time of equipment or to increasing equipment available for use on a DX basis.

d. Shortages of Critical Repair Parts (Class IX). Availability of critically needed repair parts such as tires, tubes, batteries, wheel cylinders, landing legs, and five ton engines has continually been a problem. The DSU/ASLs remain constantly at "O" balance for those items. Procurement by means of Red Ball and Red Ball Expanded has alleviated the situation partially. This situation has also existed at the depots which further adds to the problem. It is recommended that when experience has proven that certain items are consumed as fast as they arrive in country, an increase in stockage and increased procurement should be immediately considered by the depots. Closer liaison between supply and maintenance operations at USARV level should help to provide earlier detection of impending supply problems.

e. Keystone Activities. One of the most important functions performed by the maintenance units has been the Keystone operations. The following are some of the lessons learned during those operations:

(1) During the planning and execution phases of Keystone operations, numerous problems were noted which should be considered in planning for future Keystone operations. One significant limiting factor at the beginning of the project was the limited information available to the personnel organizing the operation. The processing area had to be reorganized in a period of less than two weeks to meet the requirements for processing the large quantities of equipment. The processing area perimeter was expanded to provide the required area. Adequate time and more complete information would have allowed

a more suitable area to be established to handle the peak turn-in flow more efficiently. If at all possible, the processing facility should be adjacent to a port shipping area to reduce the labor and transportation required in moving processed vehicles to the shipping point.

(2) In the early stages of Keystone, it became evident that it was not feasible to supply the processing work force on a temporary detail basis from processing units. Morale and initiative of personnel of redeploying units are low, thereby making it extremely difficult to control and motivate personnel towards maintaining quality performance. During the later stages of Keystone, a permanent detail was attached to the 86th Maintenance Battalion from the 4th Infantry Division which was being Keystoned. NCOs were included in this attachment to assure that unit integrity and organization were preserved. It is recommended that this highly effective system be taken a step further and that in future Keystone operations an entire company with Keystoned trained cadre be established and located at the processing area to handle all large operations.

(3) During the early portion of Keystone in Cha Rang, the "awaiting shipment" files were organized by quality control number according to destination. Since items within each destination varied in size and weight, it proved very difficult to organize quantity shipments of a variety of items available for containerized shipment. The files were reorganized to parallel the commodity receiving areas. Within each commodity section, documents were organized by quality control numbers within destination categories. This system made it much easier to locate documents for specific items and to develop packing information suitable for handling mixed cargo in containerized shipments. Future Keystone operations should organize their files by commodity instead of destination.

(4) Documentation requirements could be simplified for the processing unit. Equipment can be processed just as efficiently if only three rather than six copies each of USARV Forms 562 and 563 were required. Secondly, items and PSC property could be SCRAM coded at the time of turn in to the Keystone operation rather than being taken to the supply activity. A simpler method should be established to allow units to turn in all found-on-post property and those items not on unit property books. This would eliminate abuse, misappropriation and/or destruction of many items which could go back into supply channels.

4. (C) Transportation.

a. Inadequate Training of Heavy Vehicle Drivers.

ANNEX D (Logistics) to Senior Officer Debriefing Report

(1) Safe and proper operation of heavy vehicles (tractor-trailer combinations) requires a higher level of professional skill and knowledge. Transportation truck units do not normally receive MOS qualified heavy vehicle drivers (MOS 64B20). Replacements are usually light vehicle drivers (MOS 64A10) or some other MOS requiring retraining. The combat theater is not the ideal environment for providing the basic fundamentals of heavy vehicle driver training due to the pressures of mission accomplishment and often times criticality of mission resources. Additionally, the OJT heavy vehicle driver is more accident prone and is involved in more equipment failures.

(2) The heavy vehicle driver MOS 64B20 should be awarded only upon completion of AIT and only AIT qualified heavy vehicle drivers should be assigned to a combat theater. Also, OJT heavy vehicle drivers should be designated by a different MOS to distinguish them from school trained drivers, thereby identifying their probably marginal capability.

b. Household Goods and Personal Baggage Services.

(1) Unaccompanied baggage service for personnel moving out of RVN is performed adequately under civilian household goods carriers contract. The same services for personnel moving intra-RVN are marginal in performance as these are under PA&E contract which merely requires PA&E to "construct wooden containers for personal effects of troops departing for points other than CONUS." It does not provide for packing services. The bulk of frustrated personal baggage shipments in RVN result from the PA&E contract service.

(2) Household goods and personal effects of departing military personnel should be entitled to the best service obtainable regardless of destination of member, i.e., out of country or intra-RVN. Present Rate Service Tenders for household goods carriers should be renegotiated to provide packing and crating services for all military personnel regardless of destination and terminate the marginal performance of PA&E in this area.

c. Military Line Haul Performance Versus Calculated Capabilities.

(1) Transportation doctrine developed for military highway capability/performance criteria and formulas cannot be applied in RVN without some modifications. The RVN environment is unique where determination of highway transport capability is concerned. Truck performance is affected by the hostile environment, topography of the land, road conditions, security requirements (to include restrictions on night operations), operator capabilities, maintenance proficiency, shortage of drivers, and age and condition of equipment. Adverse operating conditions are the greatest single factor degrading mission

performance. In addition, because of the variations in mission transportation requirements, the standard TOE truck companies require an extraordinary mix of type vehicles tailored to mission performance.

(2) Specific recommendations include the following:

(a) Planning criteria/formulas should be developed within the theater for application to all line haul truck units as a measure of capability/performance vice the usual "school solution" measures.

(b) TOE truck units should be equipped with items peculiar to theater of operations where employed.

(c) MOS school-trained operators should be assigned where possible.

(d) Vehicle shortages due to combat and other losses should be replaced in shortest possible time.

(e) Military line haul drivers (school-trained) should be provided special incentive pay as additional motivational factor to increase truck turnaround.

5. (C) Services. Graves Registration (GR)

a. Most problems occurring in this area have been solved through courtesy staff visits conducted by the USARV Memorial Activities NCO. For US remains the primary problem encountered has been that the deceased's individual unit was not filling out the inventories of personal effects properly. GR personnel are assisting all units in the preparation of these inventories to assure that they are correct.

b. At Tuy Hoa and Qui Nhon there have been several instances which have arisen in the area of support to ROKFV. At Tuy Hoa the ROK forces would not provide an escort for a period of up to six (6) days. Remains must be flown to Nha Trang for cremation from Tuy Hoa. ROK representatives and US liaison teams have been contacted in reference to this difficulty and corrective action has been normally taken promptly. However, there has been no permanent solution to the problem.

c. At Qui Nhon there is a ROK signal unit living with the Korean GR personnel. This was noted on the latest inspection report by the USARV Memorial Activities NCO as being unsatisfactory. A letter was submitted to the Commanding General, ROK Tiger Division requesting that he remove this signal unit from the GR point but no action has been taken as yet. A courtesy copy was furnished to the US liaison officer for the ROK forces.

ANNEX D (Logistics) to Senior Officer Debriefing Report

d. Because of the strict operational standards established for US GR operations, it is considered highly undesirable that US GR points operate in conjuction with similar activities or operations of other FWMAF. This restriction would not prevent the processing of FWMAF remains through US GR points. However, such processing must be in accordance with US standards.

ANNEX E (Engineer) to Senior Officer Debriefing Report

1. (C) Operations of ACofS Engineer Section.

a. The ACofS, Engineer Section within the USASUPCOM, QN has functioned as an Area Engineer Office in the Northern II Corps Military Region in the Republic of Vietnam. With the USAECV Headquarters located in Long Binh and the 18th Engineer Brigade plus the Central District Engineer offices located at Cam Ranh Bay, all engineer functions (either troop or contract) required close monitoring and coordination by the ACofS, Engineer in the Support Command's area of responsibility. This area stretches westward along QL-19 from Qui Nhon to An Khe and Pleiku and then north along QL-1 to Phu Cat and LZ English and then southward to Tuy Hoa and Vung Ro Bay area.

b. The Logistical Facilities and Installations were widely dispersed throughout the rugged Central Highlands and supply operation depended largely upon the use of highway routes (QL-1, QL-19 and QL-14) and the water routes along the coast heading to the port of Qui Nhon and the outport at Vung Ro Bay. The railroad line along QL-1 was never satisfactory for military use because of security and ease of VC interdiction.

c. Engineer troop effort was devoted primarily to combat and operational support tasks with little or no effort available for any vertical construction. Primary engineer troop tasks were devoted to LOC construction and upgrade, field fortifications and mine sweeping and clearing operations.

d. Maintenance of facilities (Repairs and Utilities) and Facilities Engineering Services were contracted to the Pacific Architects and Engineers (PA&E) and subsequently reduced by 40% because USARV funds were limited. The PA&E services continued to decline from August 1970 and the trend remains into the foreseeable future.

e. The ACofS, Engineer was responsible for the following functions:

(1) Recommending policy and providing technical guidance on all engineering matters to the commander and staff to include organic and tenant units located in the Qui Nhon area of operations.

(2) Maintaining status of MCA and O&MA construction projects of command interest and keeping the commander informed of all engineer units, work or agencies operating in the area.

(3) Establishing priorities on all support command projects.

(4) Recommending allocation and release of critical construction materials or equipment for area projects.

(5) Maintaining liaison on real estate matters with the DCSLOG, USARV, the USAECV Long Binh, Central District Engineer Cam Ranh Bay and the local Installation Engineer Qui Nhon.

(6) Coordinating all base development and turn-over planning to include maintenance of up to date site plans for major installations and compounds.

(7) Maintaining liaison on repair and utilities matters with the Central District Engineer and the USAECV for USASUPCOM, QN and tenant units.

(8) Coordinating and processing all facilities turn-over of those installations or compounds no longer required by the command or excess to US unit requirements.

f. Of all the engineer functions listed above, the excessing and turn-over of Installations and Compounds to ARVN were the most time consuming based on continued US troop drawdown and redeployment in the Qui Nhon area of responsibility. The specific policies and procedures were covered in MACV Directive 735-3 and USARV Regulation 700-26. The required reports (MACDC 13, 14, and 15s) are spelled out in the above references and required on the average 60 to 90 days for processing and final completion. Chief contacts for assistance were the Real Property Branch DCSLOG, USARV, the local Qui Nhon Installation Engineer and MACV counterparts at ARVN (II ALC). Installation Coordinator channels used were CG, 173d Abn Bde (sub zone); CG, IFFV (zone); and CG, USARV (area). The coordination process at COMUSMACV along with JGS review and approval proved to be the most time consuming bottleneck and burdened the command with security requirements.

2. (C) <u>Effectiveness of Engineer Support in the USASUPCOM, QN Area of Operation</u>.

a. Military (937th Engineer Group): The engineer military troop support was timely, responsive and extremely effective. The maintenance of QL-1 and QL-19 for line haul operations proved effective even during monsoon season or under the threat of VC attacks and ambushes.

b. Civilian (PA&E, RMK, and Vinnell):

(1) PA&E facilities engineering support declined steadily after August 1970. Cuts in funds, manpower and supervisory effort allowed only utilities support (refrigeration repair and maintenance, sewage disposal and minimum essential fire prevention and protection services). Material support was drastically curtailed and unit self-help programs were necessary to fill in the resulting maintenance gaps.

(2) The RMK Contractor (under the CICC Saigon) completed MCA budgeted construction projects with major emphasis on Qui Nhon Port facilities; a railroad spur; LST ramps; and a water treatment plant at Cha Rang, the area Keystone processing center.

(3) The Vinnell Contractor constructed and operated the land based power plant at Qui Nhon, freeing three each power ships brought into Qui Nhon in 1967-68. A savings of $500,000 per year was realized through this USARV sponsored MCA electrical power project.

3. (C) Areas of Inadequacy.

a. Facilities Engineering Support.

(1) Refuse and garbage disposal.

(2) Sewage pumping.

(3) Interior compound road maintenance.

(4) Adequate fire prevention and protection services.

b. Engineer Troop Support.

(1) Constant shifting of work priorities.

(2) Detailed justification for projects to USAECV at Long Binh.

(3) Red tape and administrative procedures to obtain local operational engineer support.

(4) Lack of construction funds.

(5) Lack of construction equipment (cranes, roadgraders, bull dozers and dump trucks).

c. Contractor Engineer Support

(1) Lack of funds.

(2) Sense of urgency and proper supervision of TCN and LN work forces.

4. (C) Logistics and Financial Support of Engineer Projects.

ANNEX E (Engineer) to Senior Officer Debriefing Report

a. Class IV construction items were considered non-combat essential and received low priority for movement and transportation.

b. Field fortifications material (sandbags, concertina wire, and steel pickets) were rigidly controlled and difficult to obtain.

c. Continued reduction in construction funds produced a "Make Do or Do Without" command policy affecting troop morale and unit efficiency.

5. (C) Third Country Support. Engineer support of third country forces (ROKA) was limited. Organic engineer units assigned to the ROKA forces provided all the necessary tactical and operational engineer support required. Normal facilities engineering support was provided by the PA&E Contractor. No problems were encountered except during rotation of ROKA units when materials for ROK boxes (hold baggage containers) became critical. The special plywood and 1X4 lumber for the containers were always short in supply and created monthly flaps. Other containers such as dufflebags, fiber boxes or footlockers were never acceptable for ROKA hold baggage shipments. Construction materials (lumber and metal roofing) along with field fortification materials (sandbags and concertina wire) also caused occasional flaps.

6. (C) Lessons Learned:

a. Areas in need of increased emphasis.

(1) Many installations and compounds were initially constructed by unit self-help and tailored to meet specific unit requirements. The facilities were gradually expanded and improved to meet established construction criteria but generally lacked sufficient latrines, showers, mess halls and utility installations. During troop drawdowns and withdrawals, extreme difficulty was encountered in restationing and repositioning numerous units. Temporary wood construction used in the facilities deteriorated and utility systems (electrical and water) had to be expanded with limited funds and engineer support.

(2) Units hesitated in leaving former compounds and setting up in other sub-standard facilities. Unauthorized construction, vandalism and stripping of buildings had to be prevented and rigidly controlled.

(3) Installations and compounds within the city of Qui Nhon were located within a congested community and local nationals bordered near the perimeter security fencing. Buffer areas were not provided and constant repair of perimeter fencing and security problems developed within the compounds. Roads

leading from the compounds were narrow, poorly maintained by the city and created military traffic and accident hazards. Military funds and procedures to eliminate these deficiencies were not readily available.

(4) ARVN Engineer units functioned under a chain of command entirely different from that used by US counterparts. Construction standards varied and continued US engineer support withdrawal created take-over gaps. ARVN Engineer functions lacked centralized control, a reliable source of supply for construction materials and positive action to accomplish engineer work on a priority basis. Engineer know how, proper equipment, selection of construction materials and additional training require additional emphasis.

b. Recommendations.

(1) Use of temporary wood construction for troop billets and administrative areas in an environment such as Vietnam is too expensive, requires extensive troop effort for construction, and maintenance becomes a serious problem. The use of tentage proved unsatisfactory and lowered troop morale and efficiency. Modular construction or use of metal pre-engineered buildings (Port-A-Kamps, trailers or skid mounted buildings) would have saved supply, transportation and construction costs. The facilities could also have been moved to meet other requirements or recouped for retrograde stockage to meet other contingency missions.

(2) Facilities engineering support could better be accomplished with a Military R&U Detachment team augmented by LN's for each compound/complex. PA&E contractor support has been sub-standard and unresponsive. Labor and supervision furnished by the PA&E contractor with US government furnished materials and equipment left too many loop holes for the contractor as to why he could not meet his workload.

(3) US compounds should be located away from populated areas and cities and the perimeter security fence should have a buffer area at least 50 meters away to prevent LN entry and apprehension without resort to use of force or weapons.

(4) Jointly used roads (US, ARVN and LN) require a procedure and definite policy for accomplishing maintenance and repair. Concentrating efforts on primary LOC highways and internal access roads leaves this problem in a definite limbo. Special funding for this situation and use of LNs would be a partial solution.

ANNEX E (Engineer) to Senior Officer Debriefing Report

(5) ARVN Engineer troops would have been better trained and equipped if they were integrated with American units and operated on joint projects. Standards, methods of construction and time saving work techniques for engineer tasks could have been developed and continued during the phase out of US Engineer units.

41

UNCLASSIFIED

Security Classification

CONFIDENTIAL

DOCUMENT CONTROL DATA - R & D

(Security classification of title, body of abstract and indexing annotation must be entered when the overall report is classified)

1. ORIGINATING ACTIVITY *(Corporate author)* HQ, OACSFOR, DA, Washington, D.C. 20310	2a. REPORT SECURITY CLASSIFICATION CONFIDENTIAL 2b. GROUP 4

3. REPORT TITLE

Senior Officer Debriefing Report - COL Charles E. Davis

4. DESCRIPTIVE NOTES *(Type of report and inclusive dates)*

Senior Officer Debriefing Report, 24 February thru 17 May 1971.

5. AUTHOR(S) *(First name, middle initial, last name)*

COL Charles E. Davis

6. REPORT DATE 14 May 1971	7a. TOTAL NO. OF PAGES 39	7b. NO. OF REFS
8a. CONTRACT OR GRANT NO. b. PROJECT NO. c. N/A d.	9a. ORIGINATOR'S REPORT NUMBER(S) 71B029 9b. OTHER REPORT NO(S) *(Any other numbers that may be assigned this report)*	

10. DISTRIBUTION STATEMENT

11. SUPPLEMENTARY NOTES N/A	12. SPONSORING MILITARY ACTIVITY OACSFOR, DA, Washington, D. C. 20310

13. ABSTRACT

CONFIDENTIAL

DD FORM 1 NOV 65 1473

UNCLASSIFIED

Security Classification

(This page is unclassified)