UNCLASSIFIED

AD NUMBER
AD464027
NEW LIMITATION CHANGE
TO Approved for public release, distribution unlimited
FROM Distribution authorized to U.S. Gov't. agencies and their contractors; Administrative/Operational Use; APR 1965. Other requests shall be referred to Army Missile Command, Redstone Arsenal, AL.
AUTHORITY
usamc 1 may 1967

THIS PAGE IS UNCLASSIFIED

UNCLASSIFIED

AD 464027

DEFENSE DOCUMENTATION CENTER

FOR

SCIENTIFIC AND TECHNICAL INFORMATION

CAMERON STATION ALEXANDRIA, VIRGINIA

UNCLASSIFIED

NOTICE: When government or other drawings, specifications or other data are used for any purpose other than in connection with a definitely related government procurement operation, the U. S. Government thereby incurs no responsibility, nor any obligation whatsoever; and the fact that the Government may have formulated, furnished, or in any way supplied the said drawings, specifications, or other data is not to be regarded by implication or otherwise as in any manner licensing the holder or any other person or corporation, or conveying any rights or permission to manufacture, use or sell any patented invention that may in any way be related thereto.

AD

CATALOGED BY: DDC
AS AD No. 464027

REPORT NO. RD-TR-65-6

TABULATED STABILITY DATA FOR A SERIES OF RING TAIL BODY CONFIGURATIONS AT MACH NUMBERS FROM 0.8 TO 4.5

AVAILABLE COPY WILL NOT PERMIT FULLY LEGIBLE REPRODUCTION. REPRODUCTION WILL BE MADE IF REQUESTED BY USERS OF DDC.

by

Donald V. Rubin

April 1965

U S ARMY MISSILE COMMAND
REDSTONE ARSENAL, ALABAMA

464027

RSA FORM 1385, 1 JAN 63 PREVIOUS EDITION IS OBSOLETE

DDC AVAILABILITY NOTICE

Qualified requesters may obtain copies of this report from DDC.

DISPOSITION INSTRUCTIONS

Destroy this report when it is no longer needed. Do not return it to the originator.

DISCLAIMER

The findings in this report are not to be construed as an official Department of the Army position, unless so designated by other authorized documents.

15 April 1965

REPORT NO. RD-TR-65-6

TABULATED STABILITY DATA FOR A SERIES OF RING TAIL BODY CONFIGURATIONS AT MACH NUMBERS FROM 0.8 TO 4.5

by
Donald V. Rubin

DA Project No. 1S222901A206
AMC Management Structure Code No. 5221.11.148

Aerodynamics Branch
Advanced Systems Laboratory
Directorate of Research and Development
U. S. Army Missile Command
Redstone Arsenal, Alabama

ABSTRACT

The static stability characteristics of ring tails on a body of revolution has been investigated during a series of wind tunnel tests. Mach numbers varied from 0.8 to 4.5, and ring diameters varied from 1.25 to 2.50 calibers. This report presents a tabulation of the basic results obtained from the tests.

SYMBOLS AND MODEL NOMENCLATURE

CAB	Base Axial-Force Coefficient, $\frac{\text{Base Axial Force}}{qS}$
CAF	Forebody Axial Force Coefficient, $\frac{\text{Forebody Axial Force}}{qS}$
CM	Pitching Moment Coefficient, $\frac{\text{Pitch Moment About Nose}}{qS,\ Db}$
CN	Normal Force Coefficient, $\frac{\text{Normal Force}}{qS}$
D_b	Reference diameter-body maximum diameter
M	Mach number
Q	Dynamic pressure, psi
RN	Reynolds number per in. X 10^{-6}
S	Reference area, $\frac{D_b^2}{4}$
ALP	Angle of attack
B	Body
T	Ring Tail Configuration
X	Ring Tail Position, where:

X1 - Ring trailing edge 0.5 caliber forward of model base
X2 - Ring trailing edge at the model base
X3 - Ring trailing edge 0.5 caliber aft of model base
X4 - Ring trailing edge 0.9 caliber aft of model base
X5 - Ring trailing edge 0.25 caliber aft of model base.

1. Introduction

The Aerodynamic Branch of the Advanced Systems Laboratory is currently engaged in a supporting research program that primarily involves base drag reduction.* One promising method of base drag reduction is by the favorable interference induced by a ring tail. However, before investigating the effect of ring tails on base drag, it should first be determined if any undesirable stability characteristics are present.

A preliminary wind tunnel investigation was made to explore the force and moment characteristics of a systematic series of ring tail-body combinations. The purpose of this report is to present the experimental results obtained at Mach numbers from 0.8 to 4.5 and through an angle-of-attack range that varied from -4 degrees to 6 degrees.

Analysis of these results is in preparation.[1, 2]

2. Apparatus and Procedure

The transonic portion of the tests was conducted in the Aerodynamic Wind Tunnel, Transonic (T1) of the Propulsion Wind Tunnel Facility, Arnold Engineering Development Center (AEDC), Arnold Air Force Station. The supersonic portion of these tests was conducted in Supersonic Wind Tunnel No. 1, Ballistic Research Laboratories (BRL), Aberdeen Proving Ground, Maryland.

The Transonic (T1) facility is an open-circuit, continuous-flow wind tunnel capable of operation at Mach numbers from 0.5 to 1.5. The test section is 12 inches square by 37.5 inches long and has four parallel perforated walls.[3]

---

*This program is being conducted as a part of SR-Project, Base Drag Reduction, Code 5210.11.148.

[1] Paul R. Connolly, "The Zero-Lift Foredrag and Body Base Drag Coefficients of a Series of Ring Tail-Struct-Body Configurations at Mach Numbers from 0.8 to 4.5." Army Missile Command RF-TR-65-8.

[2] Charles E. Brazzell, "Longitudinal Stability Characteristics of a Series of Ring Tails on Bodies of Revolution at Mach Numbers From 0.8 to 4.5." Army Missile Command RF-TR-65-7.

[3] Arnold Engineering Development Center, Propulsion Wind Tunnel Facility, Vol. 3, July 1963, Test Facilities Handbook.

The Supersonic Wind Tunnel No. 1 is a closed-circuit, continuous-flow, variable-density facility with a flexible nozzle for obtaining a Mach number range of from 1.5 to 5.0. The test section is 13 inches wide by 15 inches high.[4]

The same model was tested at AEDC and at BRL. The model was constructed so that components could be interchanged to test various body and ring tail combinations. The test bodies were 1.15 inches in diameter with a 4-caliber ogive nose and a total length of 10 calibers (Figure 1). Ring tails are attached to the bodies with either the four round support posts (Figure 2) or with the four faired support fins (Figure 3).

Five wind tunnel test programs were conducted. Table 1 lists these programs and shows when and where each body tail configuration was tested. (Body B1 data from these five separate tests are shown in Table 3.) The body and total configuration data may be matched by referring to Table 1.

The model was sting mounted in the test section on a six-component internal strain gage balance. Base pressure measurements were obtained from a pressure transducer connected to two pressure orifices located in the plane of the body base. The angle of attack range was generally from -4 degrees to 6 degrees, and the Mach number range for the combined tests extended from 0.8 to 4.5.

The calculated inaccuracies in the test data which take into account the accuracy in the balance measurements and the tunnel test conditions are as follows:

AEDC Transonic (T1)

M_∞	CN	CM	CAB	CAF
0.8	±0.01	±0.026	±0.008	±0.012
1.0	±0.008	±0.022	±0.006	±0.010
1.5	±0.007	±0.017	±0.005	±0.008

[4] J. C. McMullen, Ballistic Research Laboratories, Wind Tunnel Testing Facilities at the Ballistic Research Laboratories, July 1960.

BRL Supersonic Wind Tunnel No. 1

M_∞	CN	CM	CAB	CAF
1.75	±0.008	±0.024	±0.005	±0.005
3.0	±0.008	±0.021	±0.004	±0.004
4.5	±0.009	±0.017	±0.005	±0.005

Configuration T13R has the same dimensions as T13 except the ring has been reversed to give internal compression instead of expansion.

3. Results

An index of the tabulated data is shown in Table 2. The aerodynamic coefficients for the various configurations are presented in tabulated form in Tables 3 through 54.

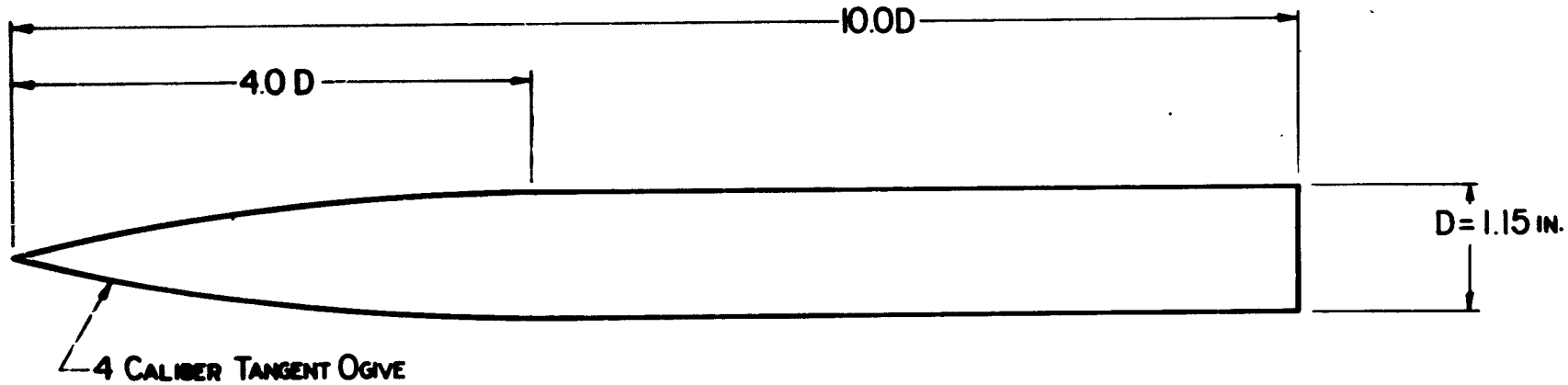

(a) BODY NO. 1

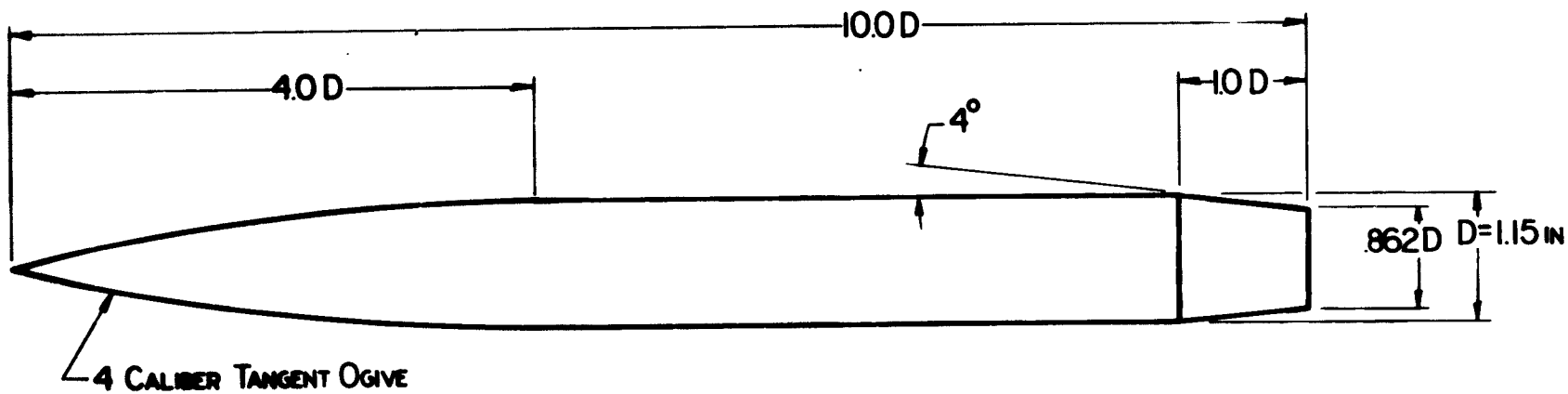

(b) BODY NO. 2

Figure 1. Body Configuration

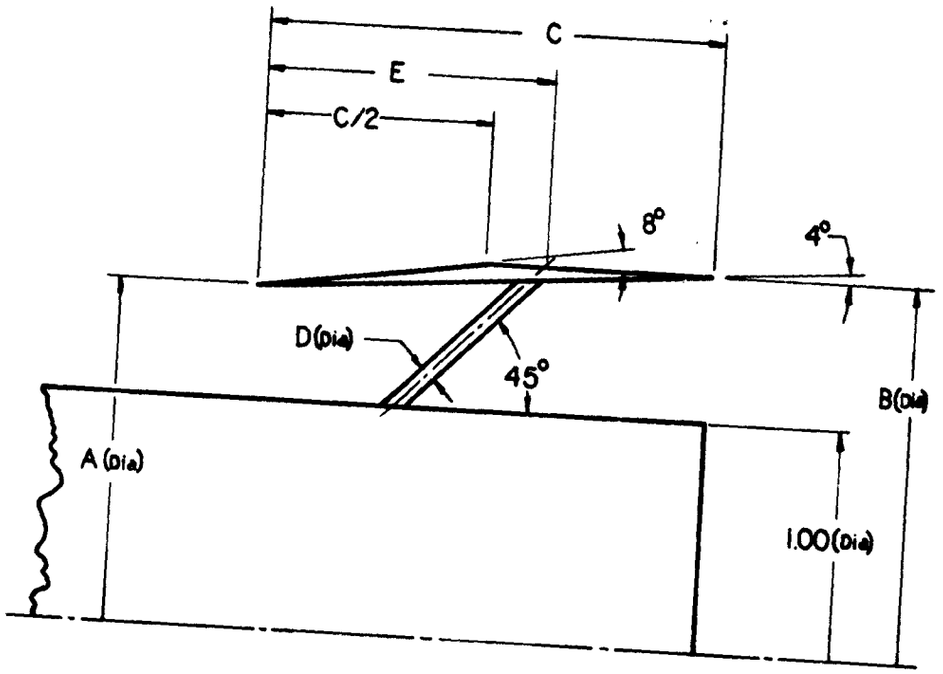

RING	A	B	C	D	E
T 1	1.500	1.605	.750	.046	.375
T 2	1.500	1.657	1.125	.052	.563
T 3	2.000	2.210	1.500	.080	.750
T 4	2.000	2.140	1.000	.070	.500
T 5	2.000	2.080	.600	.060	.300
T 10	2.500	2.675	1.250	.092	.625
T 11	2.500	2.605	.750	.080	.375
T 12	1.250	1.425	1.250	.048	.782
T 13	1.250	1.381	.937	.048	.623

(a) 4° INTERNAL EXPANSION

ALL DIMENSIONS IN CALIBERS

Figure 2. Ring Configurations (All Dimensions in Calibers)

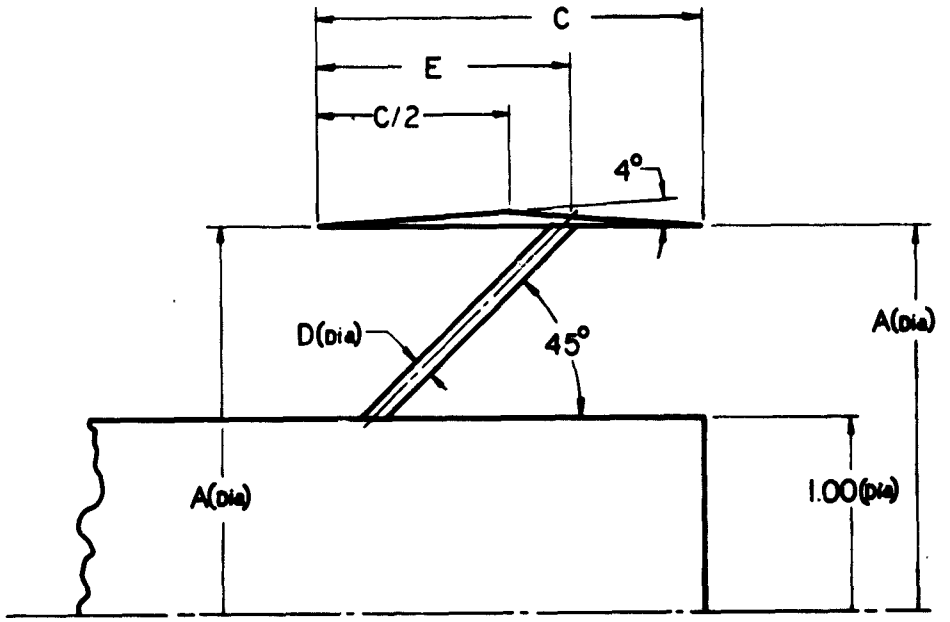

RING	A	C	D	E
T 7	2.000	1.000	.070	.500
T14	1.316	.937	.048	.612

(b) 0° INTERNAL EXPANSION

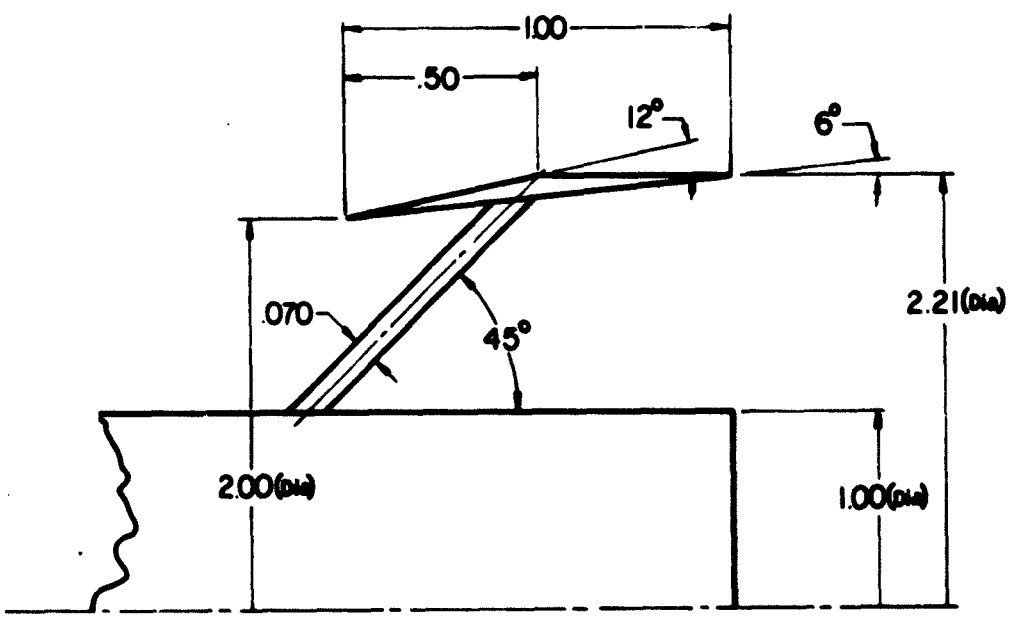

RING T8

(c) 6° INTERNAL EXPANSION

Figure 2. (Concluded)

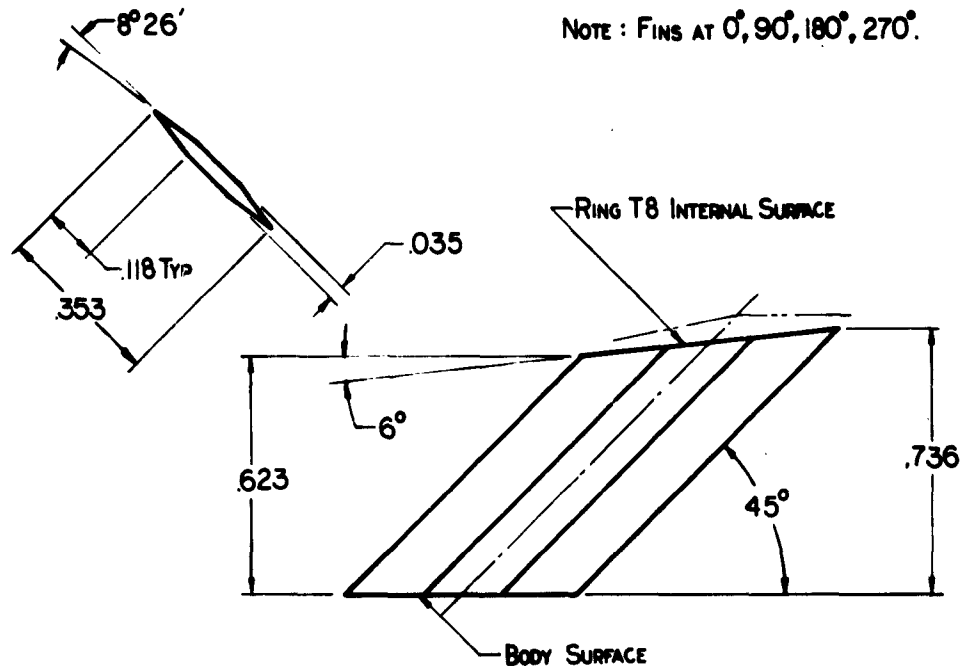

(a) FIN NO. 8S

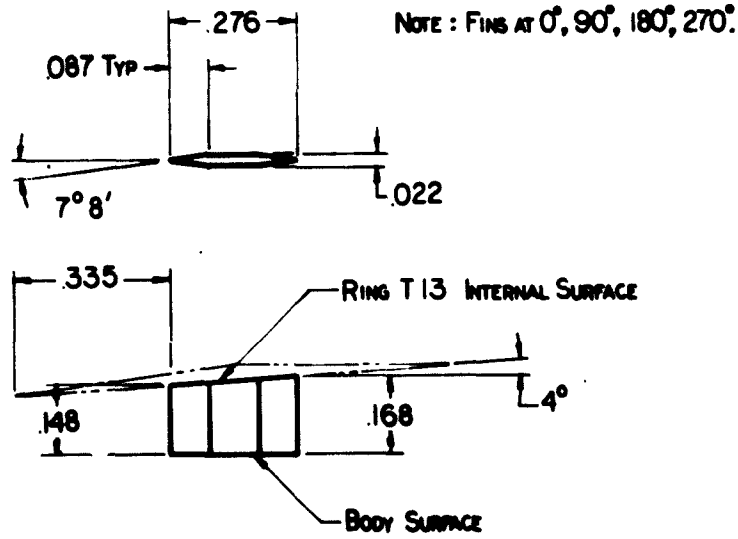

(b) FIN NO. 13S

ALL DIMENSIONS IN CALIBERS

Figure 3. Support Fin Configurations (All Dimensions in Calibers)

Table 1. Wind Tunnel Test Program

	AEDC									BRL						
Config.	0.80	0.90	0.95	1.00	1.05	1.10	1.20	1.30	1.50	1.75	2.00	2.50	3.00	3.50	4.00	4.50
B1	2, 3, 5	2, 3, 5	2	2, 3, 5	2	2, 3, 5	2	2, 3, 5	2, 3, 5	1, 4	1, 4	1, 4	1, 4		1	1
B2	5	5	5	5	5	5		5	5	1	1	1	1		1	1
B1T1X1	2	2	2	2	2	2	2	2	2	1	1	1	1		1	1
X2	2	2	2	2	2		2	2	2	1	1	1	1		1	1
X3	2	2	2	2	2	2	2	2	2	1	1	1	1		1	1
B1T2X1	3	3	3	3	3	3		3	3	1	1	1	1		1	1
X2	3	3	3	3	3	3		3	3	1	1	1	1		1	1
X3	3	3	3	3	3	3		3	3	1	1	1	1		1	1
B1T3X1	5	5	5	5	5	5		5	5	1	1	1	1		1	1
X2	5	5	5	5	5	5		5	5	1	1	1	1		1	1
X3	5	5	5	5	5	5		5	5	1	1	1	1		1	1
B1T4X1	5	5	5	5	5	5		5	5	1	1	1	1		1	1
X2	2	2	2	2	2	2	2	5	5	1	1	1	1		1	1
X3	2	2	2	2	2	2	2	5	5	1	1	1	1		1	1
X4	2	2	2	2	2	2	2	5	5	4		4	4			
B2T4X1	5	5	5	5	5	5		5	5	1	1	1	1		1	1
X2	5	5	5	5	5	5		5	5	1	1	1	1		1	1
X3	5	5	5	5	5	5		5	5	1	1	1	1		1	1
B1T5X1	5	5	5	5	5	5		5	5	1	1	1	1		1	1
X2	2	2	2	2	2	2	2	5	5	1	1	1	1		1	1
X3	2	2	2	2	2	2	2	5	5	1	1	1	1		1	1
B1T7X1	5	5	5	5	5	5		5	5	1	1	1	1		1	1
X2	5	5	5	5	5	5		5	5	1	1	1	1		1	1
X3	2	2	2	2	2	2	2	5	5	1	1	1	1		1	1
X4	2	2	2	2	2	2	2	5	5	4		4	4			
B1T8X1										1	1	1	1		1	1
X2										1	1	1	1		1	1
X3										1	1	1	1		1	1
B1T8SX1										1	1	1	1		1	1
X2										1	1	1	1		1	1
X3										1	1	1	1		1	1
B1T10X1										1	1	1	1		1	1
X2										1	1	1	1		1	1
X3										1	1	1	1		1	1
B1T11X1										1	1	1	1		1	1
X2										1	1	1	1		1	1
X3										1	1	1	1		1	1
B1T12X1	5	5	5	5	5	5		5	5	4	4	4	4			
X2	3	3	3	3	3	3		3	3	4	4	4	4			
X5	5	5	5	5	5	5		5	5	4	4	4	4			
B1T13X1	3	3	3	3	3	3		3	3	4	4	4	4			
X2	3	3	3	3	3	3		3	3	4	4	4	4			
X5	3	3	3	3	3	3		3	3	4	4	4	4			
BT13SX1	3	3	3	3	3	3		3	3	4	4	4	4			
X2	3	3	3	3	3	3		3	3	4	4	4	4			
X5	3	3	3	3	3	3		5	5	4	4	4	4			
B1T13RX1	3	3	3	3	3	3		3	3	4	4					
X2	3	3	3	3	3	3		3	3	4	4					
X5	3	3	3	3	3	3		3	3	4	4	4	4			
B1T14X1	3	3	3	3	3	3		3	3	4	4	4	4			
X2	3	3	3	3	3	3		3	3	4	4	4	4			
X5	3	3	3	3	3	3		3	3	4	4	4	4			

TEST NUMBERS:

1. BRL-1838; 13-23 May 1963
2. AEDC-TM173; 19-22 November 1963
3. AEDC-TM193; 1-11 September 1964
4. BRL-901; 1-11 September 1964
5. AEDC-TM193; 21 September - 6 October 1964

Table 2. Index of Tabulated Data

Table Number	Config. Number	Table Number	Config. Number	Table Number	Config. Number
3	B1	21	B1T5X1	39	B1T11X3
4	B2	22	B1T5X2	40	B1T12X1
5	B1T1X1	23	B1T5X3	41	B1T12X2
6	B1T1X2	24	B1T7X1	42	B1T12X5
7	B1T1X3	25	B1T7X2	43	B1T13X1
8	B1T2X1	26	B1T7X3	44	B1T13X2
9	B1T2X2	27	B1T7X4	45	B1T13X5
10	B1T2X3	28	B1T8X1	46	B1T13RX1
11	B1T3X1	29	B1T8X2	47	B1T13RX2
12	B1T3X2	30	B1T8X3	48	B1T13RX5
13	B1T3X3	31	B1T8SX1	49	B1T13SX1
14	B1T4X1	32	B1T8SX2	50	B1T13SX2
15	B1T4X2	33	B1T8SX3	51	B1T13SX5
16	B1T4X3	34	B1T10X1	52	B1T14X1
17	B1T4X4	35	B1T10X2	53	B1T14X2
18	B2T4X1	36	B1T10X3	54	B1T14X5
19	B2T4X2	37	B1T11X1		
20	B2T4X3	38	B1T11X2		

Table 3. Aerodynamic Coefficients for Configuration B1

M = .80 Q = 5.700 RN = .3810

ALP	CN	CM	CAB	CAF
-4.21	-.166	.460	.161	.124
-3.15	-.119	.315	.177	.125
-2.10	-.073	.173	.171	.121
-1.05	-.032	.060	.166	.118
.01	.013	-.078	.164	.117
1.07	.061	-.229	.165	.117
2.12	.105	-.363	.170	.116
3.18	.154	-.508	.171	.119
4.24	.202	-.666	.178	.113
6.36	.307	-1.035	.199	.104
.01	.015	-.088	.164	.116

M = .90 Q = 6.520 RN = .4010

ALP	CN	CM	CAB	CAF
-4.24	-.169	.501	.168	.110
-3.17	-.122	.350	.159	.112
-2.11	-.076	.208	.153	.112
-1.05	-.031	.069	.149	.111
.02	.017	-.086	.148	.109
1.08	.063	-.231	.150	.111
2.14	.109	-.373	.153	.110
3.21	.159	-.537	.159	.111
4.27	.205	-.697	.168	.106
6.42	.319	-1.121	.200	.094
.02	.017	-.087	.149	.110

M = .95 Q = 6.750 RN = .4090

ALP	CN	CM	CAB	CAF
-4.26	-.177	.551	.178	.119
-3.19	-.129	.394	.169	.119
-2.12	-.082	.251	.162	.124
-1.05	-.032	.089	.158	.120
.02	.013	-.060	.157	.120
1.08	.055	-.197	.158	.119
2.15	.108	-.369	.162	.120
3.22	.160	-.545	.170	.116
4.29	.207	-.704	.182	.110
6.44	.323	-1.156	.214	.102
.02	.014	-.063	.155	.118

M = 1.00 Q = 7.090 RN = .4190

ALP	CN	CM	CAB	CAF
-4.27	-.182	.603	.220	.114
-3.20	-.134	.439	.210	.117
-2.12	-.083	.273	.205	.115
-1.06	-.038	.125	.202	.113
.01	.011	-.051	.204	.108
1.09	.061	-.229	.197	.115
2.16	.110	-.395	.207	.112
3.23	.159	-.558	.219	.106
4.31	.213	-.746	.235	.101
6.47	.328	-1.174	.266	.099
.01	.012	-.055	.204	.109

M = 1.05 Q = 7.460 RN = .4220

ALP	CN	CM	CAB	CAF
-4.29	-.191	.656	.235	.142
-3.21	-.140	.496	.223	.146
-2.13	-.091	.343	.220	.139
-1.06	-.041	.180	.210	.139
.02	.007	.011	.206	.142
1.09	.056	-.154	.209	.139
2.17	.104	-.313	.213	.140
3.25	.156	-.490	.222	.145
4.32	.205	-.654	.238	.134
6.50	.327	-1.093	.280	.125
.02	.005	.016	.211	.135

M = 1.10 Q = 7.700 RN = .4230

ALP	CN	CM	CAB	CAF
-4.30	-.192	.669	.238	.150
-3.22	-.144	.512	.222	.158
-2.14	-.094	.361	.217	.156
-1.06	-.044	.200	.214	.148
.02	.001	.055	.214	.147
1.10	.052	-.106	.217	.150
2.18	.103	-.274	.219	.152
3.26	.154	-.440	.230	.150
4.35	.212	-.642	.240	.149
6.53	.328	-1.051	.279	.143
.02	.006	.038	.209	.153

M = 1.20 Q = 8.190 RN = .4320

ALP	CN	CM	CAB	CAF
-4.31	-.186	.597	.207	.181
-3.23	-.138	.457	.196	.187
-2.14	-.089	.324	.189	.186
-1.06	-.042	.195	.195	.175
.03	.006	.048	.192	.174
1.11	.053	-.087	.188	.178
2.19	.102	-.226	.199	.174
3.28	.151	-.371	.207	.175
4.37	.207	-.552	.225	.169
6.57	.326	-.952	.267	.156
.03	.006	.049	.193	.171

M = 1.30 Q = 8.400 RN = .4160

ALP	CN	CM	CAB	CAF
-4.33	-.179	.491	.202	.179
-3.24	-.127	.349	.189	.184
-2.15	-.080	.227	.184	.179
-1.06	-.034	.112	.182	.176
.03	.014	-.015	.183	.172
1.12	.060	-.134	.184	.177
2.21	.111	-.268	.188	.177
3.31	.161	-.405	.198	.175
4.40	.213	-.555	.212	.169
6.61	.340	-.995	.245	.163
.03	.015	-.021	.183	.175

M = 1.50 Q = 8.560 RN = .3860

ALP	CN	CM	CAB	CAF
-4.35	-.182	.474	.191	.202
-3.25	-.132	.346	.179	.207
-2.16	-.083	.231	.174	.203
-1.06	-.032	.113	.171	.199
.04	.014	.002	.172	.197
1.13	.063	-.115	.173	.194
2.23	.111	-.215	.178	.193
3.34	.165	-.358	.187	.186
4.44	.221	-.515	.198	.184
6.68	.366	-1.034	.225	.178
.04	.015	-.001	.171	.185

M = 1.75 Q = 6.200 RN = .3600

ALP	CN	CM	CAB	CAF
6.03	.313	-.911	.182	.151
5.02	.250	-.685	.174	.156
3.98	.191	-.500	.164	.146
2.94	.137	-.347	.156	.163
1.91	.087	-.212	.150	.162
.87	.039	-.094	.149	.162
.32	.014	-.029	.148	.161
-.17	-.008	.023	.148	.161
-.71	-.032	.070	.149	.161
-1.22	-.056	.128	.152	.163
-1.74	-.079	.183	.154	.161
-2.26	-.103	.241	.156	.159
-3.26	-.152	.380	.160	.157
-4.29	-.204	.523	.166	.157

M = 2.00 Q = 5.850 RN = .3400

ALP	CN	CM	CAB	CAF
6.12	.327	-.930	.165	.157
5.11	.261	-.699	.161	.150
4.06	.200	-.502	.155	.156
3.03	.144	-.350	.149	.160
1.99	.093	-.212	.147	.158
1.47	.067	-.162	.146	.163
.94	.042	-.095	.144	.155
.42	.019	-.042	.143	.160
-.10	-.004	.008	.143	.158
-.62	-.028	.064	.144	.157
-1.15	-.052	.116	.147	.161
-1.67	-.077	.174	.150	.157
-2.18	-.101	.232	.152	.161
-3.17	-.149	.364	.153	.159
-4.21	-.207	.531	.157	.155

M = 2.50 Q = 4.930 RN = .3200

ALP	CN	CM	CAB	CAF
6.00	.363	-1.145	.135	.145
4.98	.284	-.832	.133	.142
3.95	.216	-.599	.130	.142
2.92	.155	-.413	.127	.150
1.88	.098	-.249	.125	.149
1.35	.068	-.178	.124	.146
.82	.041	-.101	.124	.144
.31	.016	-.044	.123	.147
-.18	-.009	.021	.123	.147
-.72	-.036	.094	.124	.145
-1.23	-.062	.157	.125	.148
-1.74	-.089	.225	.126	.153
-2.25	-.115	.298	.127	.145
-3.26	-.171	.465	.127	.151
-4.29	-.234	.666	.129	.151

M = 3.00 Q = 4.130 RN = .3100

ALP	CN	CM	CAB	CAF
5.87	.391	-1.359	.106	.126
4.86	.305	-.992	.106	.130
3.83	.228	-.694	.105	.127
2.79	.161	-.463	.103	.142
1.76	.099	-.249	.102	.126
1.[illegible]2	.068	-.184	.101	.133
.73	.040	-.113	.100	.128
.[illegible]0	.013	-.022	.100	.140
-.30	-.016	.041	.100	.131
-.83	-.045	.126	.100	.128
-1.34	-.073	.198	.100	.123
-1.86	-.102	.281	.100	.125
-2.38	-.132	.366	.101	.130
-3.35	-.191	.557	.101	.135
-4.38	-.261	.815	.102	.130

M = 4.00 Q = 2.340 RN = .2500

ALP	CN	CM	CAB	CAF
5.80	.433	-1.735	.064	.137
4.80	.328	-1.213	.064	.133
3.80	.244	-.848	.064	.127
2.76	.170	-.556	.064	.128
1.75	.107	-.348	.064	.126
1.20	.071	-.234	.065	.118
.72	.042	-.141	.065	.120
.21	.013	-.042	.065	.119
-.29	-.017	.053	.065	.101
-.80	-.048	.166	.065	.105
-1.31	-.078	.248	.065	.102
-1.81	-.109	.355	.065	.104
-2.33	-.141	.457	.065	.125
-3.32	-.206	.709	.065	.104
-4.33	-.280	.990	.065	.122

M = 4.50 Q = 2.450 RN = .320[illegible]

ALP	CN	CM	CAB	CAF
5.90	.447	-1.859	.051	.118
4.91	.342	-1.329	.050	.115
3.87	.259	-.967	.050	.112
2.86	.183	-.644	.050	.124
1.83	.111	-.371	.050	.103
1.30	.081	-.298	.050	.116
.81	.049	-.187	.050	.113
.28	.016	-.058	.050	.135
-.20	-.012	.048	.050	.098
-.72	-.044	.173	.050	.157
-1.24	-.074	.260	.050	.106
-1.73	-.107	.384	.049	.121
-2.25	-.140	.508	.049	.110
-3.22	-.204	.753	.049	.120
-4.24	-.285	1.092	.049	.118

Table 3. (Continued)

M = .80 Q = 5.700 RN = .3810

ALP	CN	CM	CAB	CAF
-4.20	-.144	.519	.179	.197
-3.14	-.115	.327	.180	.101
-2.08	-.067	.169	.174	.100
-1.04	-.030	.083	.170	.105
.01	.013	-.048	.168	.102
1.07	.056	-.174	.169	.102
2.12	.099	-.294	.175	.098
3.17	.147	-.451	.180	.094
4.23	.194	-.598	.188	.089
6.35	.300	-.974	.209	.075

M = .90 Q = 6.520 RN = .4010

ALP	CN	CM	CAB	CAF
-4.23	-.179	.599	.158	.106
-3.17	-.127	.412	.148	.113
-2.11	-.080	.258	.143	.118
-1.05	-.035	.118	.142	.116
.01	.009	-.022	.141	.119
1.07	.053	-.158	.142	.116
2.13	.100	-.308	.148	.113
3.20	.148	-.462	.156	.107
4.26	.197	-.629	.165	.102
6.40	.311	-1.056	.197	.085

M = 1.00 Q = 7.090 RN = .4190

ALP	CN	CM	CAB	CAF
-4.25	-.176	.607	.207	.101
-3.18	-.128	.447	.195	.107
-2.11	-.079	.281	.190	.111
-1.04	-.030	.113	.188	.112
.02	.016	-.041	.187	.114
1.09	.061	-.189	.190	.107
2.16	.112	-.365	.198	.105
3.23	.163	-.537	.209	.096
4.31	.218	-.736	.223	.094
6.46	.332	-1.156	.262	.074

M = 1.10 Q = 7.700 RN = .4230

ALP	CN	CM	CAB	CAF
-4.28	-.189	.673	.232	.146
-3.21	-.144	.553	.222	.147
-2.13	-.090	.361	.216	.151
-1.05	-.044	.222	.211	.153
.02	.005	.040	.209	.150
1.10	.051	-.090	.211	.149
2.17	.100	-.243	.216	.145
3.25	.150	-.403	.225	.144
4.33	.204	-.588	.241	.134
6.50	.321	-.996	.283	.120
2.17	.103	-.263	.217	.147

M = 1.30 Q = 8.400 RN = .4160

ALP	CN	CM	CAB	CAF
-4.30	-.171	.500	.203	.151
-3.21	-.120	.354	.192	.156
-2.12	-.073	.234	.187	.156
-1.04	-.026	.111	.183	.162
.05	.018	.001	.181	.162
1.13	.062	-.100	.184	.158
2.21	.109	-.214	.189	.155
3.30	.159	-.350	.200	.148
4.40	.211	-.498	.217	.140
6.60	.318	-.938	.245	.134
4.40	.213	-.510	.218	.139

M = 1.50 Q = 8.560 RN = .3860

ALP	CN	CM	CAB	CAF
-4.33	-.179	.463	.189	.162
-3.23	-.124	.312	.181	.165
-2.14	-.080	.227	.177	.161
-1.05	-.028	.091	.174	.163
.04	.014	.017	.174	.160
1.13	.066	-.120	.177	.160
2.23	.117	-.247	.177	.154
3.33	.171	-.399	.185	.151
4.43	.230	-.560	.200	.142
6.66	.371	-1.108	.229	.136
.04	.014	.012	.173	.156

M = 1.75 Q = 6.200 RN = .3500

ALP	CN	CM	CAB	CAF
8.84	.519	-1.725	.224	.132
7.74	.421	-1.316	.221	.136
6.63	.338	-.986	.215	.132
5.54	.268	-.728	.207	.134
4.47	.209	-.547	.199	.133
3.39	.153	-.391	.194	.131
2.31	.099	-.223	.188	.132
1.76	.073	-.148	.185	.137
1.22	.050	-.098	.183	.136
.69	.028	-.053	.184	.133
.16	.005	-.002	.184	.136
-.37	-.015	.031	.184	.139
-.90	-.036	.065	.183	.138
-1.44	-.062	.144	.186	.137
-1.98	-.089	.21	.188	.137
-3.05	-.139	.353	.191	.138
-4.13	-.193	.509	.196	.135

M = 2.00 Q = 5.850 RN = .3500

ALP	CN	CM	CAB	CAF
8.69	.540	-1.833	.190	.144
7.59	.439	-1.404	.187	.142
6.48	.351	-1.045	.182	.142
5.40	.276	-.773	.175	.141
4.31	.210	-.543	.168	.140
3.24	.154	-.380	.162	.137
2.17	.102	-.238	.158	.138
1.61	.076	-.177	.156	.136
1.08	.050	-.109	.154	.137
.54	.024	-.052	.153	.141
.01	.000	-.005	.153	.142
-.51	-.023	.047	.153	.142
-1.06	-.048	.113	.153	.146
-1.58	-.070	.155	.155	.144
-2.12	-.095	.210	.157	.144
-3.18	-.146	.348	.160	.146
-4.28	-.207	.535	.164	.147

M = 2.50 Q = 4.130 RN = .3100

ALP	CN	CM	CAB	CAF
8.80	.408	-2.254	.149	.142
7.52	.487	-1.683	.149	.132
6.42	.384	-1.238	.146	.130
5.35	.299	-.895	.142	.128
4.27	.226	-.625	.137	.128
3.21	.163	-.425	.133	.135
2.14	.103	-.242	.130	[illegible]
1.58	.078	-.195	.128	.133
1.05	.050	-.121	.127	.135
.52	.024	-.055	.127	.136
.00	.000	-.004	.126	.137
-.54	-.026	.063	.126	.137
-1.06	-.050	.120	.126	.138
-1.59	-.077	.187	.127	.138
-2.12	-.107	.245	.127	.138
-3.18	-.159	.419	.128	.141
-4.24	-.223	.621	.130	.139

M = 3.00 Q = 4.130 RN = .3100

ALP	CN	CM	CAB	CAF
8.36	.664	-2.719	.114	.141
7.27	.521	-1.971	.115	.135
6.19	.404	-1.411	.114	.135
5.11	.309	-.998	.112	.131
4.05	.230	-.689	.110	.128
2.99	.163	-.462	.108	.130
1.94	.101	-.265	.106	.136
1.38	.071	-.189	.105	.130
.86	.044	-.113	.104	.130
.33	.016	-.040	.104	.129
-.18	-.009	.024	.104	.130
-.71	-.035	.087	.104	.131
-1.24	-.063	.164	.104	.132
-1.76	-.093	.248	.103	.133
-2.28	-.121	.329	.103	.134
-3.35	-.185	.543	.103	.136
-4.40	-.255	.793	.104	.138

Table 3. (Concluded)

M = .80 Q = 5.700 RN = .3810

ALP	CN	CM	CAB	CAF
-4.19	-.158	.492	.175	.101
-3.14	-.113	.323	.168	.124
-2.09	-.068	.176	.166	.105
-1.03	-.024	.043	.164	.107
.02	.019	-.086	.162	.111
1.07	.062	-.207	.165	.115
2.13	.107	-.345	.167	.108
3.18	.152	-.500	.173	.086
4.23	.201	-.675	.177	.051
6.35	.306	-1.015	.192	.086
-3.14	-.111	.304	.170	.109

M = .90 Q = 6.520 RN = .4010

ALP	CN	CM	CAB	CAF
-4.22	-.159	.474	.168	.099
-3.16	-.114	.335	.160	.115
-2.09	-.067	.182	.151	.114
-1.03	-.022	.044	.150	.112
.02	.021	-.088	.151	.110
1.09	.065	-.220	.151	.111
2.15	.112	-.365	.157	.109
3.21	.159	-.517	.167	.098
4.27	.208	-.681	.171	.095
6.41	.320	-1.092	.195	.090
.03	.023	-.099	.151	.115

M = 1.00 Q = 7.090 RN = .4190

ALP	CN	CM	CAB	CAF
-4.25	-.169	.540	.219	.104
-3.17	-.119	.381	.208	.122
-2.11	-.071	.226	.198	.120
-1.04	-.024	.063	.195	.118
.03	.022	-.095	.197	.116
1.10	.069	-.245	.197	.126
2.16	.117	-.405	.203	.115
3.23	.166	-.587	.216	.075
4.31	.218	-.752	.226	.102
6.46	.334	-1.182	.262	.088
-3.17	-.118	.368	.208	.112

M = 1.10 Q = 7.700 RN = .4230

ALP	CN	CM	CAB	CAF
-4.28	-.183	.614	.241	.129
-3.21	-.132	.425	.230	.109
-2.12	-.082	.292	.224	.148
-1.05	-.035	.126	.220	.125
.02	.011	-.028	.222	.125
1.10	.060	-.179	.222	.125
2.18	.107	-.303	.225	.157
3.25	.156	-.456	.234	.153
4.33	.209	-.631	.246	.150
6.51	.327	-1.054	.286	.131
-3.20	-.130	.426	.231	.152

M = 1.30 Q = 8.400 RN = .4160

ALP	CN	CM	CAB	CAF
-4.31	-.169	.454	.202	.163
-3.22	-.119	.319	.195	.174
-2.13	-.073	.207	.190	.175
-1.05	-.027	.092	.188	.169
.04	.017	-.008	.187	.176
1.12	.062	-.119	.189	.170
2.21	.106	-.226	.194	.170
3.30	.158	-.362	.202	.167
4.39	.211	-.521	.218	.161
6.60	.332	-.926	.240	.147
-4.31	-.168	.449	.203	.158

M = 1.50 Q = 8.560 RN = .3860

ALP	CN	CM	CAB	CAF
-4.35	-.186	.481	.191	.160
-3.25	-.132	.328	.182	.171
-2.16	-.082	.197	.180	.166
-1.06	-.033	.081	.179	.167
.03	.013	-.022	.178	.168
1.12	.061	-.133	.180	.164
2.22	.111	-.243	.183	.172
3.31	.163	-.384	.191	.158
4.42	.221	-.547	.203	.157
6.65	.361	-1.031	.220	.156
-3.25	-.130	.316	.185	.158

Table 4. Aerodynamic Coefficients for Configuration B2

M = .80 Q = 5.700 RN = .3810

ALP	CN	CM	CAB	CAF
-4.19	-.125	.112	.068	.135
-3.13	-.084	.036	.065	.135
-2.09	-.055	.023	.064	.133
-1.04	-.022	-.004	.062	.134
.01	.010	-.028	.061	.134
1.07	.049	-.078	.063	.132
2.12	.079	-.092	.065	.128
3.17	.114	-.129	.068	.127
4.22	.151	-.196	.075	.123
6.34	.246	-.442	.103	.100
-1.03	-.019	-.009	.062	.131
.01	.011	-.031	.062	.130

M = .90 Q = 6.520 RN = .4010

ALP	CN	CM	CAB	CAF
-4.22	-.126	.133	.056	.136
-3.16	-.090	.081	.052	.137
-2.10	-.055	.043	.051	.137
-1.04	-.021	.011	.050	.137
.02	.010	-.008	.050	.137
1.08	.042	-.020	.050	.136
2.14	.076	-.054	.052	.134
3.20	.112	-.100	.056	.129
4.26	.151	-.167	.064	.124
6.40	.249	-.444	.096	.102
.02	.010	-.003	.050	.132

M = .95 Q = 6.750 RN = .4090

ALP	CN	CM	CAB	CAF
-4.23	-.126	.121	.054	.133
-3.17	-.088	.069	.049	.137
-2.10	-.054	.036	.048	.134
-1.04	-.022	.018	.050	.136
.02	.010	-.002	.047	.138
1.08	.043	-.019	.050	.136
2.15	.077	-.045	.051	.133
3.21	.112	-.082	.054	.131
4.28	.152	-.156	.062	.124
6.43	.252	-.439	.092	.107
.02	.010	.000	.049	.136

M = 1.00 Q = 7.090 RN = .4190

ALP	CN	CM	CAB	CAF
-4.25	-.127	.110	.058	.148
-3.18	-.090	.062	.054	.153
-2.11	-.054	.028	.052	.153
-1.04	-.022	.018	.051	.154
.02	.009	.018	.050	.155
1.09	.041	.011	.052	.152
2.16	.075	-.003	.053	.151
3.23	.112	-.048	.059	.147
4.30	.153	-.129	.067	.142
6.46	.260	-.464	.098	.126
.02	.009	.017	.050	.157

M = 1.05 Q = 7.460 RN = .4220

ALP	CN	CM	CAB	CAF
-4.27	-.147	.262	.102	.182
-3.19	-.106	.183	.096	.181
-2.12	-.067	.124	.093	.184
-1.05	-.032	.091	.091	.184
.02	.003	.052	.091	.185
1.09	.038	.022	.092	.177
2.16	.075	-.023	.095	.174
3.23	.113	-.042	.101	.171
4.31	.159	-.185	.113	.167
6.48	.267	-.526	.150	.147
.02	.004	.047	.091	.182

M = 1.10 Q = 7.700 RN = .4230

ALP	CN	CM	CAB	CAF
-4.28	-.153	.311	.117	.188
-3.20	-.110	.218	.111	.188
-2.13	-.071	.158	.108	.188
-1.05	-.034	.111	.104	.191
.02	.003	.065	.105	.189
1.09	.039	.023	.107	.187
2.17	.078	-.028	.110	.184
3.25	.119	-.102	.116	.181
4.33	.165	-.211	.130	.173
6.51	.275	-.555	.165	.158
.02	.003	.066	.105	.190

M = 1.30 Q = 8.400 RN = .4160

ALP	CN	CM	CAB	CAF
-4.31	-.147	.243	.109	.182
-3.22	-.103	.163	.103	.186
-2.13	-.060	.097	.099	.186
-1.04	-.018	.037	.099	.187
.04	.016	.013	.099	.185
1.13	.056	-.030	.101	.182
2.22	.096	-.087	.105	.179
3.31	.138	-.154	.115	.173
4.41	.189	-.274	.126	.168
6.61	.302	-.598	.148	.165
.04	.014	.022	.099	.186

M = 1.50 Q = 8.560 RN = .3960

ALP	CN	CM	CAB	CAF
-4.35	-.168	.321	.114	.175
-3.25	-.119	.216	.104	.182
-2.15	-.075	.143	.100	.185
-1.06	-.032	.082	.100	.187
.03	.011	.021	.101	.187
1.13	.053	-.033	.105	.183
2.22	.099	-.112	.110	.176
3.32	.145	-.149	.117	.172
4.42	.199	-.321	.125	.170
6.66	.335	-.765	.143	.166
.03	.011	.025	.101	.182

M = 1.75 Q = 6.200 RN = .3600

ALP	CN	CM	CAB	CAF
6.08	.294	-.712	.104	.177
5.07	.233	-.494	.099	.178
4.02	.178	-.345	.093	.181
2.98	.124	-.230	.088	.185
1.94	.082	-.138	.086	.179
1.40	.057	-.101	.085	.182
.88	.034	-.055	.085	.184
.36	.014	-.016	.085	.181
-.16	-.006	.013	.084	.180
-.68	-.027	.038	.085	.179
-1.18	-.048	.079	.087	.181
-1.69	-.070	.118	.089	.181
-2.21	-.092	.153	.090	.179
-3.22	-.137	.254	.093	.184
-4.25	-.186	.371	.097	.180

M = 2.00 Q = 5.850 RN = .3400

ALP	CN	CM	CAB	CAF
6.14	.309	-.753	.097	.174
5.12	.245	-.524	.094	.171
4.09	.187	-.368	.089	.172
3.04	.136	-.239	.086	.169
2.02	.088	-.142	.084	.172
1.48	.052	-.099	.084	.167
.97	.040	-.056	.083	.170
.45	.019	-.025	.082	.168
-.07	-.002	.007	.082	.167
-.60	-.025	.033	.082	.168
-1.12	-.047	.086	.084	.169
-1.64	-.070	.125	.086	.164
-2.14	-.092	.163	.087	.165
-3.15	-.139	.276	.088	.169
-4.18	-.191	.402	.090	.168

M = 2.50 Q = 4.930 RN = .3200

ALP	CN	CM	CAB	CAF
6.00	.345	-.988	.083	.157
4.98	.270	-.697	.082	.154
3.95	.202	-.471	.079	.155
2.90	.145	-.323	.076	.156
1.87	.091	-.186	.075	.146
1.34	.063	-.130	.074	.155
.83	.038	-.075	.074	.152
.29	.014	-.028	.074	.150
-.19	-.008	.013	.073	.154
-.73	-.034	.068	.073	.155
-1.24	-.059	.120	.074	.151
-1.75	-.083	.168	.075	.152
-2.27	-.108	.225	.076	.155
-3.27	-.160	.366	.077	.159
-4.30	-.221	.542	.079	.152

M = 3.00 Q = 4.130 RN = .3100

ALP	CN	CM	CAB	CAF
5.92	.379	-1.225	.069	.143
4.91	.287	-.822	.068	.155
3.89	.219	-.592	.067	.158
2.86	.155	-.385	.065	.151
1.83	.097	-.220	.064	.146
1.29	.066	-.152	.063	.143
.79	.039	-.088	.063	.152
.26	.014	-.032	.062	.147
-.25	-.012	.023	.062	.149
-.75	-.039	.093	.062	.150
-1.27	-.067	.156	.062	.141
-1.77	-.093	.215	.063	.145
-2.26	-.119	.283	.063	.148
-3.29	-.178	.470	.064	.145
-4.32	-.246	.694	.065	.152

M = 4.00 Q = 2.340 RN = .2500

ALP	CN	CM	CAB	CAF
5.80	.415	-1.580	.042	.119
4.81	.322	-1.135	.041	.113
3.79	.236	-.771	.041	.116
2.77	.165	-.508	.041	.113
1.75	.101	-.290	.041	.104
1.23	.068	-.194	.041	.094
.73	.041	-.120	.041	.094
.20	.011	-.032	.041	.081
-.27	-.016	.051	.040	.095
-.79	-.044	.125	.040	.084
-1.30	-.073	.208	.041	.084
-1.83	-.102	.291	.041	.100
-2.31	-.131	.375	.041	.099
-3.31	-.196	.612	.040	.098
-4.32	-.268	.884	.040	.099

M = 4.50 Q = 2.450 RN = .3200

ALP	CN	CM	CAB	CAF
5.81	.421	-1.667	.032	.131
4.81	.324	-1.194	.032	.129
3.79	.243	-.859	.032	.130
2.77	.170	-.563	.031	.127
1.76	.104	-.330	.031	.112
1.21	.071	-.257	.031	.110
.72	.040	-.123	.031	.114
.21	.013	-.048	.031	.102
-.28	-.016	.039	.031	.105
-.81	-.046	.155	.031	.133
-1.31	-.075	.248	.030	.102
-1.83	-.107	.340	.030	.097
-2.34	-.138	.451	.030	.110
-3.31	-.202	.681	.030	.108
-4.33	-.278	.985	.030	.119

Table 5. Aerodynamic Coefficients for Configuration B1T1X1

M = .80 Q = 5.700 RN = .3810

ALP	CN	CM	CAB	CAF
-4.27	-.320	1.752	.139	.396
-3.19	-.212	1.081	.133	.403
-2.11	-.111	.473	.130	.408
-1.04	-.020	-.067	.128	.409
.02	.063	-.525	.128	.410
1.09	.151	-1.027	.131	.411
2.16	.244	-1.579	.134	.405
3.24	.353	-2.236	.138	.401
4.31	.454	-2.876	.142	.398
6.47	.666	-4.181	.156	.383
.02	.061	-.517	.129	.407

M = 1.05 Q = 7.440 RN = .4220

ALP	CN	CM	CAB	CAF
-4.35	-.335	1.909	.198	.491
-3.25	-.226	1.231	.184	.495
-2.15	-.127	.635	.172	.502
-1.06	-.036	.095	.170	.504
.03	.056	-.448	.170	.506
1.12	.148	-.984	.175	.505
2.22	.244	-1.574	.184	.496
3.31	.340	-2.148	.194	.496
4.41	.451	-2.832	.202	.489
6.62	.678	-4.246	.221	.491
.03	.059	-.469	.170	.506

M = 1.50 Q = 8.560 RN = .3860

ALP	CN	CM	CAB	CAF
-4.44	-.361	2.017	.191	.408
-3.31	-.255	1.413	.187	.407
-2.19	-.155	.847	.185	.407
-1.08	-.058	.299	.183	.411
.04	.040	-.260	.183	.411
1.16	.141	-.826	.181	.408
2.28	.240	-1.371	.181	.407
3.41	.341	-1.937	.183	.402
4.54	.450	-2.567	.187	.398
6.83	.701	-4.015	.206	.393
.05	.045	-.284	.181	.393

M = 3.00 Q = 4.130 RN = .3100

ALP	CN	CM	CAB	CAF
5.73	.504	-2.419	.108	.229
4.73	.397	-1.859	.108	.231
3.71	.300	-1.389	.107	.232
2.66	.210	-.957	.106	.240
1.65	.127	-.580	.107	.236
1.09	.084	-.384	.107	.233
.60	.044	-.198	.107	.234
.05	.005	-.023	.108	.223
-.43	-.032	.147	.107	.237
-.96	-.074	.338	.107	.239
-1.46	-.115	.527	.107	.236
-1.98	-.155	.705	.107	.240
-2.48	-.194	.886	.107	.233
-3.50	-.275	1.272	.107	.232
-4.52	-.365	1.701	.107	.225

M = .90 Q = 6.520 RN = .4010

ALP	CN	CM	CAB	CAF
-4.29	-.319	1.786	.116	.397
-3.21	-.215	1.131	.108	.401
-2.13	-.123	.580	.103	.403
-1.05	-.036	.087	.100	.402
.02	.046	-.383	.097	.397
1.10	.139	-.908	.103	.400
2.19	.230	-1.423	.111	.403
3.26	.330	-2.061	.115	.402
4.35	.438	-2.734	.122	.402
6.54	.703	-4.509	.135	.399
.03	.055	-.437	.100	.406

M = 1.10 Q = 7.700 RN = .4230

ALP	CN	CM	CAB	CAF
-4.36	-.321	1.767	.187	.484
-3.25	-.219	1.170	.181	.484
-2.15	-.127	.631	.173	.490
-1.06	-.041	.154	.169	.498
.04	.048	-.338	.165	.496
1.13	.132	-.802	.163	.499
2.22	.215	-1.274	.167	.499
3.32	.314	-1.858	.182	.486
4.43	.424	-2.516	.183	.492
6.65	.651	-3.912	.215	.482
.03	.042	-.316	.160	.505

M = 1.75 Q = 6.200 RN = .3600

ALP	CN	CM	CAB	CAF
5.89	.526	-2.783	.171	.333
4.85	.423	-2.221	.166	.335
3.82	.324	-1.689	.162	.337
2.76	.228	-1.176	.161	.341
1.73	.141	-.718	.158	.339
1.16	.093	-.476	.155	.338
.66	.053	-.276	.152	.337
.12	.010	-.051	.151	.343
-.37	-.029	.152	.151	.340
-.90	-.072	.371	.152	.342
-1.41	-.114	.578	.156	.342
-1.94	-.157	.794	.158	.337
-2.47	-.201	1.026	.160	.351
-3.46	-.286	1.476	.161	.332
-4.51	-.381	1.982	.161	.337

M = 4.00 Q = 2.340 RN = .2500

ALP	CN	CM	CAB	CAF
5.71	.534	-2.691	.070	.216
4.71	.415	-2.028	.070	.207
3.69	.315	-1.518	.070	.204
2.66	.217	-1.026	.070	.220
1.65	.137	-.659	.071	.220
1.12	.089	-.438	.071	.203
.60	.047	-.232	.071	.204
.11	.009	-.055	.072	.191
-.39	-.031	.159	.072	.209
-.91	-.072	.360	.073	.204
-1.40	-.113	.541	.073	.200
-1.93	-.157	.749	.072	.193
-2.42	-.195	.922	.072	.202
-3.43	-.281	1.316	.073	.205
-4.43	-.372	1.777	.072	.204

M = .95 Q = 6.750 RN = .4090

ALP	CN	CM	CAB	CAF
-4.32	-.355	2.091	.139	.480
-3.24	-.251	1.449	.139	.485
-2.14	-.139	.742	.133	.484
-1.06	-.042	.143	.137	.483
.02	.050	-.432	.137	.485
1.11	.157	-1.088	.138	.486
2.19	.251	-1.667	.135	.486
3.29	.362	-2.374	.141	.488
4.37	.469	-3.054	.143	.477
6.57	.715	-4.642	.146	.475
.03	.058	-.483	.139	.485

M = 1.20 Q = 8.190 RN = .4320

ALP	CN	CM	CAB	CAF
-4.39	-.334	1.855	.181	.456
-3.28	-.231	1.247	.179	.458
-2.17	-.139	.720	.175	.464
-1.06	-.045	.201	.173	.466
.04	.041	-.270	.171	.467
1.15	.132	-.771	.166	.473
2.25	.224	-1.290	.170	.470
3.35	.320	-1.847	.179	.461
4.46	.422	-2.451	.188	.458
6.71	.648	-3.783	.207	.463
.04	.039	-.256	.170	.466

M = 2.00 Q = 5.850 RN = .3400

ALP	CN	CM	CAB	CAF
5.96	.491	-2.447	.165	.294
4.93	.401	-1.983	.160	.302
3.90	.309	-1.520	.157	.299
2.85	.223	-1.093	.156	.303
1.81	.141	-.690	.157	.310
1.28	.097	-.480	.158	.304
.77	.057	-.282	.158	.306
.23	.017	-.084	.158	.308
-.27	-.021	.104	.159	.303
-.81	-.061	.298	.159	.301
-1.32	-.100	.493	.157	.297
-1.84	-.142	.700	.155	.298
-2.35	-.183	.902	.154	.311
-3.37	-.262	1.302	.153	.298
-4.41	-.348	1.721	.153	.298

M = 4.50 Q = 2.450 RN = .3200

ALP	CN	CM	CAB	CAF
5.60	.529	-2.692	.057	.230
4.61	.417	-2.066	.057	.236
3.60	.313	-1.522	.057	.242
2.56	.214	-1.050	.057	.227
1.54	.128	-.624	.057	.244
1.01	.082	-.422	.057	.211
.52	.041	-.207	.057	.208
-.01	-.000	-.003	.057	.215
-.49	-.040	.211	.057	.212
-1.02	-.082	.401	.057	.211
-1.51	-.124	.605	.057	.231
-2.03	-.166	.805	.057	.212
-2.53	-.208	1.009	.057	.209
-3.53	-.290	1.405	.057	.219
-4.54	-.387	1.896	.057	.218

M = 1.00 Q = 7.090 RN = .4190

ALP	CN	CM	CAB	CAF
-4.35	-.376	2.285	.193	.472
-3.25	-.261	1.545	.185	.483
-2.16	-.155	.865	.180	.482
-1.06	-.043	.145	.176	.480
.03	.071	-.609	.176	.475
1.12	.177	-1.295	.180	.478
2.22	.284	-1.968	.185	.479
3.31	.391	-2.639	.194	.475
4.40	.497	-3.307	.201	.472
6.61	.732	-4.798	.210	.466
.03	.071	-.616	.178	.484

M = 1.30 Q = 8.400 RN = .4160

ALP	CN	CM	CAB	CAF
-4.42	-.360	2.061	.192	.397
-3.29	-.248	1.386	.187	.397
-2.18	-.143	.756	.185	.399
-1.07	-.039	.137	.184	.403
.05	.066	-.490	.184	.404
1.17	.170	-1.110	.183	.415
2.28	.274	-1.722	.182	.405
3.40	.375	-2.309	.183	.407
4.52	.487	-2.972	.189	.405
6.77	.705	-4.208	.213	.402
.05	.064	-.482	.193	.400

M = 2.50 Q = 4.930 RN = .3200

ALP	CN	CM	CAB	CAF
5.92	.496	-2.378	.135	.271
4.89	.397	-1.893	.134	.278
3.86	.307	-1.464	.133	.268
2.82	.222	-1.061	.132	.276
1.79	.139	-.661	.132	.269
1.25	.096	-.465	.132	.266
.73	.056	-.266	.132	.271
.20	.015	-.076	.133	.273
-.30	-.023	.113	.133	.267
-.82	-.063	.305	.133	.281
-1.32	-.103	.498	.133	.268
-1.84	-.144	.692	.132	.270
-2.37	-.185	.891	.132	.273
-3.37	-.265	1.276	.131	.278
-4.40	-.350	1.684	.131	.271

Table 6. Aerodynamic Coefficients for Configuration B1T1X2

M = .80 Q = 5.700 RN = .3810

ALP	CN	CM	CAB	CAF
-4.24	-.308	1.768	.197	.412
-3.17	-.200	1.090	.189	.411
-2.11	-.112	.532	.184	.417
-1.03	-.009	-.113	.180	.420
.04	.089	-.735	.182	.421
1.10	.179	-1.302	.183	.420
2.17	.282	-1.958	.188	.416
3.24	.373	-2.517	.196	.406
4.36	.461	-3.046	.213	.390
6.45	.682	-4.443	.257	.365
.03	.080	-.698	.183	.410

M = .90 Q = 6.520 RN = .4010

ALP	CN	CM	CAB	CAF
-4.28	-.352	2.245	.195	.373
-3.20	-.242	1.502	.185	.381
-2.12	-.134	.774	.178	.383
-1.04	-.026	.077	.171	.385
.03	.068	-.547	.171	.388
1.11	.172	-1.232	.171	.395
2.19	.279	-1.924	.175	.395
3.27	.385	-2.640	.180	.395
4.35	.495	-3.382	.187	.390
6.53	.772	-5.372	.224	.381
.03	.070	-.565	.166	.387

M = .95 Q = 6.750 RN = .4090

ALP	CN	CM	CAB	CAF
-4.28	-.315	1.876	.225	.413
-3.21	-.215	1.220	.221	.412
-2.13	-.112	.542	.210	.408
-1.04	-.047	.270	.198	.432
.03	.041	-.287	.197	.435
1.11	.144	-.977	.200	.438
2.19	.244	-1.635	.203	.441
3.27	.350	-2.335	.206	.439
4.36	.464	-3.087	.212	.442
6.54	.715	-4.794	.226	.435
-2.13	-.128	.695	.209	.419

M = 1.00 Q = 7.090 RN = .4190

ALP	CN	CM	CAB	CAF
-4.30	-.333	2.054	.298	.454
-3.22	-.229	1.359	.288	.466
-2.13	-.121	.649	.267	.478
-1.05	-.024	.035	.264	.482
.04	.075	-.601	.262	.486
1.12	.166	-1.191	.259	.487
2.21	.270	-1.858	.262	.485
3.29	.372	-2.526	.268	.487
4.38	.478	-3.236	.274	.489
6.57	.704	-4.692	.278	.470
.03	.068	-.560	.258	.486

M = 1.05 Q = 7.460 RN = .4220

ALP	CN	CM	CAB	CAF
-4.35	-.376	2.383	.328	.453
-3.25	-.264	1.637	.318	.464
-2.16	-.160	.942	.297	.483
-1.07	-.054	.252	.285	.488
.02	.043	-.388	.270	.504
1.11	.146	-1.049	.270	.506
2.19	.245	-1.699	.278	.507
3.28	.350	-2.390	.286	.501
4.38	.461	-3.116	.296	.494
6.58	.694	-4.641	.318	.479
.02	.044	-.392	.270	.500

M = 1.20 Q = 8.190 RN = .4320

ALP	CN	CM	CAB	CAF
-4.39	-.406	2.639	.261	.442
-3.27	-.280	1.801	.257	.444
-2.17	-.172	1.085	.247	.448
-1.07	-.062	.361	.233	.466
.03	.045	-.336	.226	.472
1.14	.154	-1.050	.227	.471
2.24	.266	-1.786	.234	.463
3.34	.377	-2.524	.240	.461
4.44	.487	-3.251	.249	.455
6.67	.723	-4.765	.275	.449
.03	.046	-.344	.226	.471

M = 1.30 Q = 8.400 RN = .4160

ALP	CN	CM	CAB	CAF
-4.40	-.418	2.748	.239	.396
-3.29	-.294	1.924	.233	.400
-2.18	-.176	1.124	.225	.404
-1.07	-.055	.299	.219	.412
.05	.070	-.549	.217	.416
1.15	.183	-1.314	.218	.416
2.26	.304	-2.126	.222	.412
3.37	.420	-2.893	.226	.411
4.49	.537	-3.660	.234	.408
6.74	.780	-5.184	.261	.401
.05	.067	-.521	.218	.414

M = 1.50 Q = 8.560 RN = .3860

ALP	CN	CM	CAB	CAF
-4.42	-.397	2.478	.212	.364
-3.30	-.284	1.769	.206	.365
-2.19	-.172	1.057	.199	.371
-1.07	-.055	.300	.196	.373
.04	.052	-.394	.195	.375
1.16	.165	-1.117	.197	.376
2.27	.274	-1.799	.202	.373
3.39	.387	-2.514	.208	.373
4.52	.509	-3.282	.215	.370
6.79	.762	-4.853	.237	.365
.04	.051	-.387	.195	.370

M = 1.75 Q = 6.200 RN = .3600

ALP	CN	CM	CAB	CAF
5.82	.574	-3.419	.197	.325
4.81	.467	-2.787	.190	.328
3.77	.358	-2.129	.182	.326
2.73	.251	-1.485	.177	.327
1.69	.153	-.890	.174	.331
1.14	.101	-.583	.172	.323
.63	.056	-.317	.169	.333
.11	.010	-.056	.167	.332
-.39	-.034	.203	.166	.336
-.92	-.081	.467	.167	.334
-1.43	-.128	.741	.168	.338
-1.97	-.178	1.040	.169	.339
-2.48	-.226	1.319	.171	.341
-3.49	-.319	1.887	.175	.334
-4.52	-.427	2.539	.181	.335

M = 2.00 Q = 5.850 RN = .3400

ALP	CN	CM	CAB	CAF
5.95	.538	-3.037	.180	.297
4.89	.435	-2.450	.176	.300
3.87	.337	-1.899	.170	.302
2.81	.244	-1.375	.166	.300
1.78	.153	-.869	.165	.303
1.23	.106	-.604	.163	.304
.73	.062	-.360	.163	.310
.21	.018	-.105	.164	.306
-.32	-.027	.157	.165	.307
-.84	-.072	.415	.165	.305
-1.35	-.117	.668	.165	.305
-1.86	-.161	.920	.165	.301
-2.37	-.205	1.161	.165	.301
-3.40	-.292	1.653	.167	.305
-4.43	-.386	2.169	.170	.304

M = 2.50 Q = 4.930 RN = .3200

ALP	CN	CM	CAB	CAF
5.92	.545	-2.958	.145	.261
4.87	.435	-2.357	.145	.270
3.84	.339	-1.842	.146	.274
2.81	.243	-1.322	.149	.268
1.76	.150	-.817	.151	.271
1.22	.102	-.554	.152	.272
.72	.061	-.339	.154	.273
.19	.017	-.095	.155	.279
-.31	-.026	.146	.155	.275
-.84	-.072	.395	.156	.270
-1.33	-.112	.610	.155	.284
-1.85	-.158	.863	.155	.264
-2.38	-.204	1.111	.154	.274
-3.37	-.292	1.595	.153	.272
-4.41	-.387	2.104	.151	.263

M = 3.00 Q = 4.130 RN = .3100

ALP	CN	CM	CAB	CAF
5.74	.543	-2.885	.107	.231
4.72	.434	-2.298	.107	.233
3.70	.330	-1.730	.108	.233
2.65	.233	-1.215	.110	.225
1.63	.140	-.725	.113	.234
1.07	.091	-.477	.114	.239
.59	.050	-.263	.115	.237
.07	.005	-.029	.115	.250
-.46	-.037	.194	.115	.240
-.96	-.082	.434	.115	.229
-1.48	-.125	.642	.115	.243
-1.99	-.169	.876	.115	.234
-2.49	-.212	1.083	.116	.237
-3.50	-.300	1.569	.115	.236
-4.53	-.398	2.090	.113	.216

M = 4.00 Q = 2.340 RN = .2500

ALP	CN	CM	CAB	CAF
5.62	.541	-2.868	.066	.232
4.62	.419	-2.172	.066	.223
3.60	.316	-1.613	.066	.229
2.58	.219	-1.107	.066	.223
1.56	.133	-.673	.066	.220
1.02	.085	-.437	.066	.217
.52	.043	-.227	.066	.219
.01	.000	-.012	.066	.207
-.49	-.040	.212	.066	.211
-1.00	-.083	.436	.066	.218
-1.51	-.126	.631	.066	.212
-2.00	-.168	.860	.066	.214
-2.51	-.211	1.069	.066	.223
-3.51	-.297	1.493	.066	.214
-4.52	-.396	2.009	.066	.222

M = 4.50 Q = 2.450 RN = .3200

ALP	CN	CM	CAB	CAF
5.79	.555	-2.944	.050	.207
4.77	.434	-2.248	.051	.196
3.77	.327	-1.672	.051	.195
2.74	.231	-1.171	.051	.176
1.73	.144	-.721	.050	.196
1.20	.099	-.500	.050	.179
.71	.056	-.291	.050	.183
.16	.014	-.077	.050	.183
-.31	-.025	.132	.050	.168
-.84	-.068	.355	.050	.168
-1.35	-.109	.555	.050	.181
-1.85	-.152	.778	.050	.187
-2.37	-.194	.977	.050	.189
-3.34	-.278	1.414	.050	.190
-4.36	-.382	1.950	.050	.196

Table 7. Aerodynamic Coefficients for Configuration B1T1X3

M = .80 Q = 5.700 RN = .3810

ALP	CN	CM	CAB	CAF
-4.23	-.323	1.981	.278	.305
-3.17	-.219	1.285	.258	.313
-2.11	-.127	.672	.239	.318
-1.05	-.027	.001	.230	.323
.02	.073	-.675	.228	.325
1.08	.173	-1.340	.236	.328
2.14	.268	-1.974	.252	.329
3.21	.370	-2.654	.267	.324
4.27	.472	-3.334	.286	.318
6.41	.684	-4.761	.325	.304
.02	.073	-.671	.230	.327

M = .90 Q = 6.520 RN = .4010

ALP	CN	CM	CAB	CAF
-4.26	-.323	2.005	.274	.280
-3.19	-.217	1.292	.254	.289
-2.12	-.128	.711	.228	.310
-1.05	-.040	.147	.207	.325
.02	.048	-.417	.200	.329
1.09	.133	-.955	.209	.328
2.16	.231	-1.580	.229	.317
3.23	.333	-2.269	.257	.298
4.31	.455	-3.144	.282	.294
6.47	.722	-5.130	.325	.299
.02	.054	-.453	.199	.329

M = .95 Q = 6.750 RN = .4090

ALP	CN	CM	CAB	CAF
-4.28	-.311	1.872	.318	.298
-3.20	-.208	1.201	.296	.306
-2.12	-.120	.639	.268	.328
-1.05	-.037	.117	.241	.350
.02	.048	-.412	.231	.362
1.10	.135	-.944	.240	.358
2.17	.220	-1.476	.266	.339
3.24	.313	-2.068	.296	.328
4.33	.422	-2.795	.320	.323
6.49	.652	-4.376	.358	.318
.02	.050	-.426	.233	.363

M = 1.00 Q = 7.090 RN = .4190

ALP	CN	CM	CAB	CAF
-4.29	-.293	1.700	.381	.346
-3.20	-.197	1.093	.359	.357
-2.13	-.114	.580	.329	.376
-1.05	-.029	.062	.299	.391
.02	.049	-.424	.290	.401
1.10	.138	-.964	.299	.404
2.18	.220	-1.458	.320	.391
3.26	.308	-1.984	.349	.389
4.34	.404	-2.578	.380	.376
6.52	.632	-4.130	.425	.372
.03	.053	-.448	.295	.407

M = 1.05 Q = 7.460 RN = .4220

ALP	CN	CM	CAB	CAF
-4.31	-.303	1.770	.388	.399
-3.22	-.208	1.169	.367	.406
-2.14	-.125	.663	.341	.423
-1.06	-.045	.190	.314	.440
.02	.035	-.297	.308	.450
1.10	.121	-.816	.311	.451
2.18	.205	-1.326	.326	.451
3.26	.291	-1.856	.353	.434
4.35	.387	-2.453	.380	.430
6.54	.591	-3.739	.419	.424
.02	.033	-.289	.307	.449

M = 1.10 Q = 7.700 RN = .4230

ALP	CN	CM	CAB	CAF
-4.32	-.311	1.826	.351	.417
-3.23	-.214	1.210	.333	.419
-2.15	-.128	.684	.308	.434
-1.06	-.046	.201	.286	.447
.02	.036	-.290	.275	.460
1.10	.117	-.771	.279	.459
2.19	.201	-1.265	.294	.457
3.28	.291	-1.794	.315	.451
4.37	.381	-2.355	.343	.443
6.57	.588	-3.639	.382	.435
.03	.039	-.304	.275	.461

M = 1.20 Q = 8.190 RN = .4320

ALP	CN	CM	CAB	CAF
-4.35	-.331	2.003	.316	.425
-3.24	-.229	1.377	.300	.430
-2.15	-.140	.827	.281	.448
-1.06	-.052	.285	.262	.460
.03	.037	-.269	.254	.472
1.12	.125	-.805	.258	.472
2.21	.216	-1.359	.269	.466
3.31	.306	-1.904	.286	.461
4.41	.407	-2.536	.313	.449
6.63	.631	-3.958	.359	.442
.03	.038	-.272	.254	.472

M = 1.30 Q = 8.400 RN = .4140

ALP	CN	CM	CAB	CAF
-4.35	-.332	2.041	.286	.367
-3.25	-.229	1.364	.270	.397
-2.15	-.129	.729	.252	.411
-1.05	-.033	.136	.240	.425
.05	.059	-.433	.236	.432
1.14	.153	-1.022	.239	.428
4.45	.466	-3.040	.292	.405
6.69	.704	-4.571	.332	.409
.04	.056	-.410	.236	.430

M = 1.50 Q = 8.560 RN = .3860

ALP	CN	CM	CAB	CAF
-4.37	-.347	2.185	.275	.378
-3.26	-.245	1.540	.251	.377
-2.15	-.142	.886	.231	.384
-1.04	-.036	.208	.221	.383
.06	.066	-.459	.221	.386
1.17	.174	-1.161	.226	.384
2.28	.280	-1.838	.242	.384
3.39	.391	-2.556	.263	.379
4.50	.505	-3.299	.281	.382
6.78	.773	-5.021	.311	.387
.06	.064	-.490	.222	.380

M = 1.75 Q = 6.200 RN = .3600

ALP	CN	CM	CAB	CAF
5.95	.580	-3.647	.231	.332
4.94	.474	-2.986	.229	.335
3.91	.369	-2.328	.229	.343
2.86	.267	-1.684	.235	.350
1.83	.169	-1.065	.242	.343
1.29	.118	-.743	.246	.342
.78	.071	-.449	.248	.336
.23	.021	-.135	.249	.337
-.26	-.023	.145	.249	.344
-.79	-.073	.462	.251	.336
-1.29	-.119	.754	.254	.330
-1.82	-.169	1.064	.258	.330
-2.33	-.215	1.366	.257	.330
-3.34	-.310	1.951	.254	.328
-4.36	-.410	2.583	.245	.330

M = 2.00 Q = 5.850 RN = .3400

ALP	CN	CM	CAB	CAF
5.89	.558	-3.361	.201	.311
4.87	.454	-2.750	.201	.309
3.83	.353	-2.147	.204	.313
2.78	.253	-1.534	.204	.314
1.76	.157	-.954	.203	.312
1.21	.108	-.654	.201	.317
.70	.062	-.378	.198	.316
.17	.015	-.094	.197	.318
-.32	-.029	.177	.198	.319
-.85	-.076	.461	.201	.313
-1.37	-.125	.759	.203	.318
-1.89	-.172	1.043	.204	.310
-2.40	-.216	1.312	.205	.309
-3.41	-.308	1.870	.207	.317
-4.44	-.407	2.472	.208	.310

M = 2.50 Q = 4.930 RN = .3200

ALP	CN	CM	CAB	CAF
5.81	.547	-3.125	.138	.289
4.79	.439	-2.499	.137	.286
3.76	.336	-1.924	.137	.287
2.73	.238	-1.352	.136	.292
1.69	.147	-.834	.135	.297
1.17	.099	-.568	.134	.288
.64	.054	-.310	.133	.291
.12	.011	-.070	.132	.298
-.38	-.032	.185	.132	.296
-.90	-.077	.443	.132	.297
-1.42	-.123	.705	.133	.302
-1.92	-.167	.952	.133	.298
-2.43	-.212	1.210	.134	.293
-3.44	-.301	1.714	.135	.295
-4.48	-.398	2.264	.137	.297

M = 3.00 Q = 4.130 RN = .3100

ALP	CN	CM	CAB	CAF
5.70	.549	-3.049	.104	.229
4.69	.439	-2.426	.103	.233
3.66	.331	-1.824	.103	.238
2.62	.235	-1.208	.103	.234
1.59	.144	-.793	.102	.233
1.05	.092	-.512	.101	.230
.54	.045	-.245	.100	.224
.03	.001	-.007	.100	.239
-.48	-.040	.222	.099	.255
-.99	-.084	.466	.099	.233
-1.49	-.128	.694	.099	.237
-2.01	-.174	.953	.100	.230
-2.54	-.221	1.214	.101	.221
-3.52	-.307	1.679	.101	.232
-4.55	-.408	2.248	.102	.237

M = 4.00 Q = 2.340 RN = .2500

ALP	CN	CM	CAB	CAF
5.66	.549	-2.994	.060	.202
4.68	.431	-2.311	.060	.194
3.67	.324	-1.710	.060	.197
2.64	.226	-1.184	.060	.187
1.63	.139	-.741	.059	.193
1.09	.093	-.504	.059	.200
.59	.049	-.270	.060	.187
.08	.007	-.040	.060	.184
-.43	-.036	.182	.060	.176
-.93	-.079	.441	.060	.183
-1.44	-.124	.684	.060	.196
-1.94	-.168	.903	.060	.187
-2.44	-.208	1.106	.060	.191
-3.44	-.297	1.575	.060	.187
-4.45	-.395	2.107	.059	.196

M = 4.50 Q = 2.450 RN = .3200

ALP	CN	CM	CAB	CAF
5.70	.550	-3.013	.049	.204
4.69	.433	-2.333	.049	.202
3.68	.324	-1.726	.049	.197
2.65	.226	-1.187	.049	.198
1.63	.139	-.743	.048	.204
1.10	.093	-.507	.049	.181
.60	.049	-.271	.048	.212
.08	.007	-.043	.049	.191
-.41	-.033	.185	.049	.186
-.94	-.077	.430	.049	.236
-1.45	-.121	.653	.049	.199
-1.94	-.162	.858	.049	.185
-2.44	-.206	1.089	.048	.200
-3.44	-.292	1.535	.048	.209
-4.45	-.394	2.080	.048	.201

Table 8. Aerodynamic Coefficients for Configuration B1T2X1

M = .80 Q = 5.700 RN = .3810

ALP	CN	CM	CAB	CAF
-4.27	-.383	2.320	.129	.532
-3.20	-.270	1.619	.131	.537
-2.13	-.170	1.005	.125	.547
-1.05	-.068	.413	.122	.549
.02	.020	-.086	.118	.559
1.09	.110	-.587	.119	.558
2.16	.205	-1.122	.121	.554
3.24	.310	-1.758	.126	.547
4.32	.430	-2.515	.129	.539
6.49	.687	-4.170	.140	.536
1.09	.111	-.591	.119	.554
-1.05	-.070	.427	.121	.551

M = .90 Q = 6.520 RN = .4010

ALP	CN	CM	CAB	CAF
-4.34	-.470	3.139	.098	.502
-3.24	-.319	2.089	.094	.508
-2.14	-.192	1.243	.090	.515
-1.06	-.074	.478	.087	.529
.03	.044	-.278	.086	.532
1.12	.159	-1.005	.088	.528
2.21	.278	-1.776	.091	.522
3.31	.416	-2.706	.099	.518
4.41	.587	-3.959	.104	.531
6.62	.883	-5.966	.120	.535
1.12	.154	-.974	.084	.522
.03	.043	-.270	.085	.529

M = .95 Q = 6.750 RN = .4090

ALP	CN	CM	CAB	CAF
-4.32	-.359	2.114	.134	.603
-3.23	-.233	1.267	.119	.614
-2.14	-.134	.684	.112	.627
-1.06	-.066	.380	.108	.640
.02	-.006	.166	.109	.642
1.10	.066	-.176	.107	.624
2.19	.178	-.876	.123	.612
3.29	.203	-1.697	.132	.608
4.39	.444	-2.649	.136	.607
6.60	.712	-4.397	.151	.618
1.10	.068	-.178	.112	.626
-1.06	-.059	.319	.110	.630

M = 1.00 Q = 7.090 RN = .4190

ALP	CN	CM	CAB	CAF
-4.37	-.458	3.022	.199	.642
-3.27	-.326	2.124	.196	.650
-2.16	-.196	1.255	.194	.653
-1.06	-.075	.481	.187	.667
.03	.027	-.146	.185	.670
1.13	.142	-.870	.186	.667
2.23	.266	-1.679	.189	.664
3.33	.394	-2.517	.196	.657
4.43	.520	-3.349	.206	.646
6.65	.789	-5.115	.213	.629
2.23	.275	-1.747	.194	.674
.03	.032	-.178	.189	.657

M = 1.05 Q = 7.460 RN = .4220

ALP	CN	CM	CAB	CAF
-4.39	-.492	3.328	.220	.677
-3.29	-.367	2.487	.210	.680
-2.19	-.242	1.670	.203	.687
-1.08	-.116	.834	.198	.699
.03	.054	-.410	.198	.693
1.14	.177	-1.213	.202	.696
2.24	.293	-1.953	.209	.684
3.34	.415	-2.747	.214	.683
4.45	.549	-3.637	.221	.685
6.69	.837	-5.559	.236	.686
1.14	.174	-1.198	.201	.695
-1.09	-.119	.856	.198	.688

M = 1.10 Q = 7.700 RN = .4230

ALP	CN	CM	CAB	CAF
-4.42	-.513	3.478	.221	.667
-3.31	-.380	2.596	.208	.672
-2.20	-.248	1.718	.186	.685
-1.09	-.107	.738	.166	.694
.03	.024	-.117	.160	.700
1.14	.169	-1.121	.185	.689
2.25	.295	-1.947	.205	.685
3.37	.421	-2.759	.223	.671
4.48	.551	-3.613	.230	.667
6.72	.818	-5.327	.249	.657
1.14	.163	-1.081	.187	.683
-1.08	-.096	.667	.166	.686

M = 1.30 Q = 8.400 RN = .4160

ALP	CN	CM	CAB	CAF
-4.46	-.470	3.033	.163	.493
-3.32	-.329	2.116	.161	.508
-2.20	-.204	1.322	.152	.520
-1.07	-.085	.592	.146	.531
.05	.035	-.154	.148	.535
1.17	.152	-.868	.152	.529
2.30	.276	-1.649	.154	.527
3.43	.411	-2.513	.156	.526
4.57	.557	-3.469	.163	.526
6.85	.856	-5.406	.186	.514
.05	.034	-.145	.152	.529

M = 1.50 Q = 8.560 RN = .3860

ALP	CN	CM	CAB	CAF
-4.50	-.488	3.096	.164	.440
-3.36	-.348	2.210	.166	.450
-2.22	-.220	1.408	.164	.463
-1.09	-.093	.625	.162	.464
.05	.037	-.192	.159	.471
1.18	.168	-1.013	.158	.467
2.33	.306	-1.887	.158	.467
3.46	.438	-2.718	.158	.465
4.60	.570	-3.554	.166	.449
6.90	.872	-5.484	.189	.462
.05	.036	-.187	.160	.467

M = 1.75 Q = 6.200 RN = .3600

ALP	CN	CM	CAB	CAF
6.12	.681	-4.128	.158	.417
5.08	.559	-3.396	.156	.419
4.04	.440	-2.675	.152	.422
2.98	.322	-1.960	.150	.417
1.94	.208	-1.266	.150	.423
1.40	.147	-.888	.148	.423
.86	.090	-.544	.144	.424
.33	.036	-.213	.141	.443
-.15	-.015	.089	.139	.432
-.68	-.071	.428	.139	.434
-1.20	-.127	.768	.143	.426
-1.74	-.185	1.116	.145	.431
-2.26	-.242	1.461	.148	.428
-3.27	-.352	2.142	.147	.423
-4.31	-.449	2.853	.147	.425

M = 2.00 Q = 5.850 RN = .3400

ALP	CN	CM	CAB	CAF
6.07	.626	-3.576	.157	.375
5.04	.516	-2.955	.154	.378
4.00	.406	-2.335	.151	.381
2.94	.300	-1.743	.150	.378
1.90	.198	-1.176	.148	.380
1.34	.141	-.849	.149	.382
.84	.087	-.527	.149	.382
.32	.034	-.208	.150	.384
-.18	-.020	.122	.149	.385
-.71	-.075	.461	.149	.382
-1.25	-.130	.776	.148	.379
-1.76	-.181	1.061	.148	.379
-2.26	-.229	1.328	.148	.371
-3.30	-.327	1.877	.148	.376
-4.33	-.432	2.455	.148	.378

M = 2.50 Q = 4.930 RN = .3200

ALP	CN	CM	CAB	CAF
6.05	.589	-3.126	.131	.323
5.03	.474	-2.499	.130	.330
3.99	.372	-1.954	.129	.325
2.95	.267	-1.397	.128	.328
1.90	.170	-.873	.127	.328
1.35	.119	-.618	.126	.335
.86	.074	-.384	.126	.326
.33	.030	-.159	.126	.320
-.18	-.016	.088	.126	.328
-.71	-.062	.322	.126	.324
-1.22	-.107	.556	.126	.322
-1.74	-.156	.817	.126	.329
-2.26	-.205	1.077	.126	.325
-3.26	-.297	1.575	.126	.327
-4.28	-.399	2.113	.125	.328

M = 3.00 Q = 4.130 RN = .3100

ALP	CN	CM	CAB	CAF
5.86	.575	-2.963	.109	.274
4.85	.458	-2.335	.109	.287
3.81	.354	-1.796	.109	.284
2.78	.256	-1.293	.109	.290
1.75	.159	-.808	.110	.291
1.20	.108	-.555	.110	.303
.70	.063	-.326	.110	.286
.16	.015	-.077	.111	.287
-.32	-.031	.164	.110	.284
-.86	-.076	.387	.111	.293
-1.37	-.122	.620	.110	.302
-1.88	-.168	.854	.110	.280
-2.39	-.215	1.090	.110	.302
-3.40	-.307	1.563	.109	.276
-4.42	-.408	2.087	.109	.283

M = 4.00 Q = 2.340 RN = .2500

ALP	CN	CM	CAB	CAF
-5.88	.591	-3.103	.073	.251
4.88	.465	-2.385	.072	.238
3.87	.357	-1.805	.072	.245
2.83	.253	-1.262	.072	.251
1.82	.162	-.816	.072	.243
1.28	.112	-.566	.073	.256
.77	.067	-.343	.073	.238
.29	.028	-.151	.073	.244
-.20	-.019	.109	.074	.229
-.74	-.066	.341	.074	.243
-1.23	-.109	.546	.075	.232
-1.76	-.156	.792	.075	.246
-2.26	-.201	1.005	.074	.253
-3.25	-.293	1.495	.074	.244
-4.26	-.394	2.010	.074	.243

M = 4.50 Q = 2.450 RN = .3200

ALP	CN	CM	CAB	CAF
5.90	.594	-3.159	.058	.254
4.90	.469	-2.451	.058	.250
3.89	.359	-1.857	.058	.256
2.86	.259	-1.325	.058	.244
1.84	.164	-.842	.058	.254
1.31	.115	-.603	.058	.235
.82	.071	-.372	.059	.234
.31	.027	-.145	.059	.228
-.19	-.017	.090	.059	.271
-.71	-.062	.321	.060	.238
-1.23	-.107	.562	.060	.242
-1.72	-.152	.776	.060	.244
-2.24	-.199	1.023	.060	.243
-3.22	-.291	1.493	.060	.249
-4.24	-.397	2.060	.060	.248

Table 9. Aerodynamic Coefficients for Configuration B1T2X2

M = .80 Q = 5.700 RN = .3810

ALP	CN	CM	CAB	CAF
-4.27	-.403	2.625	.185	.531
-4.27	-.402	2.620	.184	.533
-3.19	-.288	1.854	.183	.527
-2.12	-.173	1.094	.176	.532
-1.05	-.079	.513	.173	.538
.02	.021	-.114	.172	.537
1.09	.114	-.670	.174	.535
2.15	.212	-1.288	.180	.523
3.23	.330	-2.071	.185	.520
4.31	.459	-2.944	.190	.515
6.47	.711	-4.656	.212	.501
-4.27	-.406	2.645	.186	.531

M = .90 Q = 6.520 RN = .4010

ALP	CN	CM	CAB	CAF
-4.32	-.522	3.815	.163	.493
-3.23	-.348	2.483	.151	.495
-2.14	-.204	1.423	.141	.492
-1.05	-.077	.531	.141	.488
.03	.035	-.218	.137	.489
1.11	.141	-.928	.141	.484
2.20	.274	-1.827	.149	.487
3.28	.414	-2.853	.155	.485
4.39	.597	-4.260	.168	.486
6.58	.940	-6.830	.202	.497
.02	.028	-.172	.135	.494
-3.23	-.353	2.524	.152	.496

M = .95 Q = 6.750 RN = .4090

ALP	CN	CM	CAB	CAF
-4.31	-.398	2.607	.218	.556
-3.22	-.273	1.754	.214	.559
-2.14	-.173	1.101	.205	.552
-1.06	-.065	.398	.202	.549
.03	.028	-.174	.203	.553
1.11	.123	-.754	.206	.550
2.19	.227	-1.422	.218	.544
3.28	.347	-2.237	.228	.534
4.37	.482	-3.190	.228	.538
6.57	.762	-5.119	.239	.545
3.28	.342	-2.184	.230	.542

M = 1.00 Q = 7.090 RN = .4190

ALP	CN	CM	CAB	CAF
-4.32	-.375	2.384	.253	.602
-3.22	-.249	1.535	.248	.609
-2.13	-.134	.776	.243	.609
-1.05	-.046	.231	.239	.609
.02	-.003	.142	.243	.606
1.11	.096	-.489	.247	.602
2.19	.203	-1.185	.251	.600
3.29	.324	-2.005	.262	.597
4.39	.459	-2.951	.266	.598
6.60	.755	-5.058	.284	.588
.02	-.000	.121	.245	.611

M = 1.05 Q = 7.460 RN = .4220

ALP	CN	CM	CAB	CAF
-4.36	-.448	3.027	.298	.673
-3.26	-.321	2.155	.287	.675
-2.17	-.207	1.395	.269	.677
-1.08	-.099	.683	.265	.674
.02	.016	-.085	.264	.682
1.10	.113	-.715	.266	.675
2.20	.228	-1.478	.285	.666
3.31	.375	-2.497	.304	.661
4.40	.470	-3.103	.300	.663
6.61	.736	-4.903	.295	.640
-4.36	-.445	3.003	.297	.673
-3.26	-.321	2.156	.287	.676

M = 1.10 Q = 7.700 RN = .4230

ALP	CN	CM	CAB	CAF
-4.38	-.476	3.291	.274	.659
-3.27	-.340	2.353	.271	.663
-2.18	-.219	1.524	.259	.668
-1.08	-.106	.767	.253	.665
.02	.001	.066	.254	.665
1.11	.113	-.666	.268	.659
2.21	.236	-1.508	.284	.666
3.32	.364	-2.393	.289	.646
4.43	.490	-3.239	.287	.645
6.64	.743	-4.914	.280	.650
6.65	.750	-4.971	.281	.651
1.12	.118	-.704	.268	.652

M = 1.30 Q = 8.400 RN = .4160

ALP	CN	CM	CAB	CAF
-4.44	-.532	3.788	.228	.546
-3.31	-.378	2.717	.227	.548
-2.20	-.245	1.[illegible]	.223	.549
-1.07	-.100	.765	.224	.550
.04	.033	-.164	.224	.551
1.16	.174	-1.149	.224	.542
2.28	.313	-2.132	.221	.543
3.40	.456	-3.130	.227	.530
4.53	.603	-4.149	.235	.527
6.80	.888	-6.030	.255	.525
-3.31	-.380	2.733	.227	.543

M = 1.50 Q = 8.560 RN = .3860

ALP	CN	CM	CAB	CAF
-4.47	-.565	3.850	.219	.485
-3.32	-.382	2.737	.219	.498
-2.18	-.224	1.643	.219	.526
-1.07	-.098	.738	.222	.495
.06	.054	-.338	.220	.507
1.18	.202	-1.397	.220	.480
2.31	.347	-2.419	.218	.463
3.44	.498	-3.457	.216	.467
4.58	.640	-4.398	.219	.469
6.87	.912	-6.048	.236	.461
-1.07	-.094	.714	.221	.482
.05	.044	-.275	.221	.470

M = 1.75 Q = 6.200 RN = .3600

ALP	CN	CM	CAB	CAF
6.05	.735	-4.905	.189	.402
5.02	.610	-4.105	.183	.401
3.99	.484	-3.287	.182	.407
2.93	.359	-2.456	.181	.408
1.88	.230	-1.585	.180	.409
1.34	.163	-1.124	.178	.411
.83	.101	-.696	.177	.415
.31	.038	-.267	.176	.410
-.22	-.025	.176	.177	.407
-.72	-.089	.620	.177	.410
-1.23	-.153	1.059	.178	.411
-1.76	-.216	1.485	.178	.413
-2.28	-.279	1.915	.179	.417
-3.29	-.399	2.723	.181	.407
-4.34	-.524	3.544	.182	.411

M = 2.00 Q = 5.850 RN = .3400

ALP	CN	CM	CAB	CAF
6.03	.680	-4.291	.172	.385
5.00	.561	-3.572	.169	.380
3.97	.443	-2.844	.166	.382
2.93	.328	-2.126	.164	.383
1.89	.213	-1.399	.162	.388
1.34	.151	-.989	.161	.385
.83	.093	-.613	.161	.382
.30	.034	-.227	.160	.387
-.19	-.022	.151	.160	.387
-.74	-.083	.548	.161	.379
-1.25	-.140	.923	.161	.384
-1.77	-.198	1.294	.162	.382
-2.28	-.254	1.652	.162	.384
-3.30	-.361	2.322	.162	.386
-4.33	-.477	3.048	.164	.378

M = 2.50 Q = 4.930 RN = .3200

ALP	CN	CM	CAB	CAF
6.03	.632	-3.704	.142	.315
5.01	.515	-3.016	.140	.321
3.98	.399	-2.340	.137	.323
2.93	.286	-1.665	.136	.331
1.91	.180	-1.029	.136	.328
1.37	.126	-.712	.136	.327
.85	.077	-.433	.136	.328
.33	.030	-.164	.136	.323
-.18	-.016	.094	.136	.330
-.70	-.064	.359	.135	.337
-1.21	-.112	.635	.135	.327
-1.74	-.165	.945	.134	.327
-2.26	-.216	1.244	.134	.331
-3.25	-.319	1.859	.134	.335
-4.28	-.430	2.525	.135	.319

M = 3.00 Q = 4.130 RN = .3100

ALP	CN	CM	CAB	CAF
5.91	.604	-3.352	.116	.288
4.89	.486	-2.701	.116	.288
3.87	.373	-2.052	.117	.296
2.83	.268	-1.468	.118	.302
1.80	.171	-.936	.120	.294
1.26	.118	-.647	.122	.299
.73	.069	-.384	.123	.290
.23	.021	-.123	.123	.295
-.27	-.026	.145	.123	.287
-.80	-.075	.413	.123	.302
-1.30	-.125	.696	.123	.296
-1.83	-.173	.959	.124	.295
-2.34	-.222	1.224	.124	.285
-3.33	-.317	1.746	.124	.290
-4.36	-.423	2.352	.123	.280

M = 4.00 Q = 2.340 RN = .2500

ALP	CN	CM	CAB	CAF
5.81	.606	-3.303	.069	.254
4.81	.484	-2.663	.069	.265
3.80	.364	-1.985	.069	.249
2.77	.259	-1.398	.070	.255
1.77	.164	-.886	.070	.245
1.22	.112	-.612	.070	.247
.71	.063	-.341	.070	.251
.20	.019	-.103	.070	.241
-.30	-.028	.162	.070	.235
-.79	-.071	.377	.071	.248
-1.30	-.118	.633	.071	.243
-1.82	-.169	.918	.070	.257
-2.33	-.218	1.193	.070	.240
-3.31	-.313	1.691	.070	.248
-4.33	-.418	2.297	.071	.261

M = 4.50 Q = 2.450 RN = .3200

ALP	CN	CM	CAB	CAF
5.80	.605	-3.408	.055	.242
4.81	.478	-2.649	.055	.241
3.79	.364	-1.992	.055	.254
2.77	.259	-1.415	.055	.235
1.74	.157	-.850	.055	.234
1.22	.110	-.615	.055	.240
.73	.065	-.361	.055	.233
.19	.018	-.098	.055	.233
-.29	-.027	.156	.055	.239
-.82	-.073	.405	.055	.241
-1.32	-.119	.645	.055	.231
-1.83	-.166	.908	.055	.236
-2.32	-.212	1.143	.054	.240
-3.33	-.309	1.678	.055	.330
-4.33	-.418	2.281	.054	.251

Table 10. Aerodynamic Coefficients for Configuration B1T2X3

M = .80 Q = 5.700 RN = .3810

ALP	CN	CM	CAB	CAF
-4.25	-.397	2.698	.273	.457
-3.18	-.280	1.883	.264	.455
-2.11	-.174	1.169	.244	.460
-1.04	-.069	.483	.228	.468
.02	.029	-.167	.231	.467
1.09	.131	-.829	.235	.465
2.15	.225	-1.456	.253	.444
3.22	.341	-2.246	.268	.445
4.30	.449	-3.148	.278	.445
6.44	.726	-4.972	.307	.431
1.09	.126	-.800	.235	.460

M = 1.05 Q = 7.460 RN = .4270

ALP	CN	CM	CAB	CAF
-4.33	-.433	3.061	.341	.598
-3.24	-.312	2.207	.334	.605
-2.15	-.195	1.384	.324	.611
-1.06	-.081	.578	.318	.616
.02	.026	-.185	.311	.619
1.11	.140	-.977	.318	.612
2.20	.257	-1.805	.328	.600
3.29	.384	-2.733	.338	.599
4.38	.504	-3.567	.345	.589
6.58	.755	-5.271	.356	.603
2.19	.256	-1.802	.329	.608
-2.14	-.193	1.368	.322	.592

M = 1.75 Q = 6.200 RN = .3600

ALP	CN	CM	CAB	CAF
6.12	.761	-5.352	.263	.409
5.09	.632	-4.484	.267	.417
4.04	.500	-3.568	.271	.418
3.01	.371	-2.663	.275	.421
1.97	.244	-1.761	.274	.428
1.42	.175	-1.267	.272	.420
.92	.113	-.826	.274	.427
.39	.049	-.359	.280	.425
-.12	-.015	.112	.282	.406
-.64	-.079	.578	.282	.424
-1.16	-.144	1.048	.282	.431
-1.68	-.207	1.495	.280	.422
-2.20	-.270	1.938	.284	.423
-3.19	-.391	2.778	.285	.423
-4.23	-.519	3.672	.280	.416

M = 4.00 Q = 2.340 RN = .2500

ALP	CN	CM	CAB	CAF
5.80	.623	-3.658	.062	.242
4.81	.499	-2.904	.062	.250
3.79	.373	-2.165	.062	.237
2.77	.248	-1.543	.062	.248
1.75	.169	-.974	.062	.250
1.22	.117	-.675	.062	.247
.72	.066	-.381	.062	.266
.20	.018	-.100	.063	.239
-.30	-.029	.170	.063	.245
-.82	-.074	.432	.063	.235
-1.31	-.124	.708	.063	.237
-1.80	-.171	.974	.063	.238
-2.33	-.222	1.288	.063	.243
-3.31	-.318	1.821	.063	.247
-4.32	-.430	2.492	.063	.246

M = .90 Q = 6.520 RN = .4010

ALP	CN	CM	CAB	CAF
-4.28	-.462	3.423	.262	.413
-3.22	-.340	2.451	.251	.409
-2.12	-.172	1.172	.215	.424
-1.05	-.066	.460	.190	.437
.03	.035	-.221	.188	.433
1.10	.127	-.816	.202	.437
2.17	.242	-1.630	.230	.420
3.25	.383	-2.697	.247	.419
4.34	.516	-3.677	.261	.421
6.51	.842	-6.192	.287	.419
2.16	.247	-1.674	.230	.423
-2.12	-.168	1.146	.217	.422

M = 1.10 Q = 7.700 RN = .4230

ALP	CN	CM	CAB	CAF
-4.34	-.429	3.027	.319	.606
-4.34	-.431	3.040	.324	.599
-3.24	-.305	2.152	.316	.611
-2.15	-.192	1.364	.307	.611
-1.06	-.080	.588	.296	.618
.02	.020	-.104	.295	.616
1.11	.127	-.834	.302	.614
2.21	.249	-1.672	.315	.604
3.31	.367	-2.508	.319	.604
4.40	.492	-3.393	.329	.605
6.61	.757	-5.249	.330	.618
2.20	.243	-1.638	.311	.609
.02	.020	-.111	.295	.617

M = 2.00 Q = 5.850 RN = .3400

ALP	CN	CM	CAB	CAF
6.11	.717	-4.820	.208	.377
5.08	.589	-3.989	.209	.377
4.05	.462	-3.146	.213	.384
3.02	.343	-2.348	.220	.389
1.97	.223	-1.531	.225	.387
1.42	.160	-1.096	.225	.391
.91	.102	-.703	.224	.388
.38	.043	-.300	.224	.388
-.12	-.013	.090	.225	.386
-.64	-.072	.496	.226	.399
-1.16	-.131	.904	.226	.386
-1.67	-.192	1.320	.226	.386
-2.18	-.251	1.726	.227	.386
-3.20	-.367	2.503	.226	.383
-4.23	-.491	3.337	.221	.384

M = 4.50 Q = 2.450 RN = .3200

ALP	CN	CM	CAB	CAF
5.81	.619	-3.614	.047	.265
4.79	.488	-2.824	.047	.276
3.78	.365	-2.086	.047	.264
2.76	.260	-1.472	.047	.261
1.75	.163	-.933	.047	.262
1.21	.112	-.643	.047	.248
.72	.064	-.372	.047	.259
.21	.019	-.112	.047	.251
-.30	-.028	.159	.047	.253
-.82	-.074	.432	.047	.255
-1.31	-.121	.696	.047	.253
-1.83	-.169	.953	.047	.257
-2.35	-.217	1.216	.047	.259
-3.34	-.314	1.778	.047	.258
-4.35	-.425	2.418	.047	.262

M = .95 Q = 6.750 RN = .4090

ALP	CN	CM	CAB	CAF
-4.28	-.365	2.440	.281	.485
-3.20	-.250	1.636	.268	.496
-2.12	-.151	.978	.252	.499
-1.05	-.072	.501	.249	.497
.02	.029	-.186	.247	.498
1.10	.114	-.685	.251	.502
2.18	.217	-1.357	.261	.502
3.26	.324	-2.093	.273	.497
4.35	.446	-2.956	.287	.487
6.53	.714	-4.882	.316	.464
2.18	.216	-1.352	.261	.501

M = 1.30 Q = 8.400 RN = .4160

ALP	CN	CM	CAB	CAF
-4.40	-.511	3.776	.266	.553
-3.28	-.367	2.739	.259	.556
-2.16	-.220	1.668	.254	.566
-1.06	-.089	.704	.253	.563
.06	.052	-.319	.253	.565
1.16	.189	-1.331	.256	.557
2.28	.331	-2.362	.261	.548
3.39	.462	-3.284	.265	.537
4.50	.582	-4.098	.273	.526
6.76	.866	-6.031	.300	.531
-1.06	-.087	.695	.252	.548

M = 2.50 Q = 4.930 RN = .3200

ALP	CN	CM	CAB	CAF
6.00	.678	-4.299	.145	.339
4.99	.551	-3.521	.145	.333
3.97	.433	-2.778	.147	.335
2.92	.313	-2.017	.148	.334
1.89	.201	-1.292	.148	.346
1.35	.142	-.910	.147	.338
.85	.089	-.578	.146	.331
.33	.034	-.225	.146	.334
-.19	-.020	.133	.145	.333
-.71	-.075	.482	.146	.347
-1.22	-.127	.816	.147	.337
-1.74	-.183	1.167	.147	.342
-2.25	-.238	1.528	.147	.339
-3.26	-.347	2.223	.149	.345
-4.28	-.465	2.973	.150	.338

M = 1.00 Q = 7.090 RN = .4190

ALP	CN	CM	CAB	CAF
-4.31	-.419	2.944	.318	.550
-3.22	-.301	2.115	.313	.556
-2.14	-.185	1.293	.308	.556
-1.05	-.073	.528	.300	.557
.03	.033	-.213	.296	.563
1.11	.145	-.995	.303	.552
2.19	.261	-1.816	.316	.549
3.28	.378	-2.640	.323	.548
4.36	.472	-3.222	.335	.545
6.55	.717	-4.894	.356	.521
2.20	.268	-1.864	.314	.565
-2.13	-.180	1.265	.307	.551

M = 1.50 Q = 8.560 RN = .3860

ALP	CN	CM	CAB	CAF
-4.43	-.540	3.972	.245	.466
-3.31	-.389	2.871	.240	.475
-2.20	-.257	1.896	.231	.470
-1.08	-.105	.792	.223	.489
.03	.031	-.197	.220	.494
1.15	.173	-1.208	.223	.489
2.27	.316	-2.249	.230	.496
3.39	.460	-3.283	.238	.506
4.51	.605	-4.316	.251	.508
6.78	.913	-6.453	.284	.491
1.15	.173	-1.208	.225	.495
.03	.030	-.183	.218	.472

M = 3.00 Q = 4.130 RN = .3100

ALP	CN	CM	CAB	CAF
5.88	.656	-3.991	.110	.303
4.86	.528	-3.231	.110	.301
3.83	.409	-2.509	.110	.310
2.80	.298	-1.838	.110	.298
1.78	.187	-1.162	.108	.306
1.22	.129	-.806	.107	.292
.73	.076	-.474	.106	.300
.20	.022	-.138	.105	.293
-.31	-.032	.205	.105	.304
-.84	-.089	.551	.106	.292
-1.33	-.141	.876	.106	.292
-1.85	-.196	1.215	.107	.296
-2.37	-.250	1.551	.108	.301
-3.35	-.354	2.189	.109	.303
-4.38	-.468	2.883	.110	.290

Table 11. Aerodynamic Coefficients for Configuration B1T3X1

M = .80 Q = 5.700 RN = .3810

ALP	CN	CM	CAB	CAF
-4.92	-.991	6.903	.150	.936
-3.39	-.732	5.401	.149	.947
-2.26	-.498	3.700	.143	.956
-1.11	-.216	1.627	.139	.972
.03	.065	-.303	.139	.982
1.17	.315	-2.303	.134	.977
2.33	.610	-4.932	.135	.967
3.46	.886	-6.349	.138	.963
4.59	1.000	-7.042	.143	.960
6.05	1.515	-10.817	.152	.934
1.17	.316	-2.303	.134	.979

M = .90 Q = 6.520 RN = .4010

ALP	CN	CM	CAB	CAF
-4.67	-1.265	9.871	.110	.877
-3.49	-.946	7.443	.101	.887
-2.32	-.644	5.149	.094	.881
-1.14	-.294	2.394	.089	.870
.04	.007	-.698	.089	.878
1.24	.479	-3.819	.088	.888
2.41	.802	-6.316	.094	.904
3.59	1.111	-8.642	.096	.913
4.77	1.421	-11.000	.102	.915
7.09	[illegible]	[illegible]	.135	.907
[illegible]	-.957	7.544	.100	[illegible]

M = .95 Q = 6.750 RN = .4090

ALP	CN	CM	CAB	CAF
-4.59	-.885	6.398	.168	.990
-3.41	-.619	4.458	.156	1.019
-2.27	-.421	3.092	.153	1.059
-1.12	-.200	1.522	.153	1.077
.03	.029	-.163	.155	1.091
1.18	.269	-1.921	.153	1.083
2.34	.503	-3.589	.151	1.070
3.50	.728	-5.161	.148	1.038
4.68	1.036	-7.498	.153	1.034
7.06	1.670	-12.286	.165	1.028
-3.41	-.614	4.400	.158	1.013

M = 1.00 Q = 7.090 RN = .4190

ALP	CN	CM	CAB	CAF
-4.70	-1.144	8.745	.237	1.035
-3.52	-.863	6.652	.222	1.058
-2.33	-.567	4.409	.217	1.076
-1.14	-.240	1.882	.216	1.082
.06	.093	-.694	.221	1.079
1.24	.398	-3.079	.220	1.083
2.43	.727	-5.615	.220	1.084
3.63	1.029	-7.895	.222	1.080
4.81	1.312	-9.991	.230	1.074
7.19	1.892	-14.311	.240	1.054
.06	.065	-.478	.217	1.086
.04	.062	-.455	.216	1.082
4.82	1.328	-10.121	.231	1.070

M = 1.05 Q = 7.460 RN = .4220

ALP	CN	CM	CAB	CAF
-4.79	-1.353	10.700	.225	1.050
-3.59	-1.029	8.221	.231	1.063
-2.39	-.705	5.712	.230	1.070
-1.17	-.365	2.877	.217	1.078
.05	.121	-1.062	.236	1.060
1.26	.479	-3.879	.255	1.064
2.48	.836	-6.600	.262	1.067
3.69	1.171	-9.262	.255	1.067
4.89	1.483	-11.603	.262	1.064
7.29	2.090	-16.175	.241	1.062
.05	.122	-1.063	.234	[illegible]

M = 1.10 Q = 7.700 RN = .4230

ALP	CN	CM	CAB	CAF
-4.81	-1.327	10.451	.230	1.025
-3.49	-.995	7.917	.252	1.036
-2.37	-.631	5.043	.222	1.044
-1.19	-.243	1.927	.197	1.045
.05	.061	-.417	.192	1.053
1.22	.378	-2.880	.205	1.055
2.49	.804	-6.348	.233	1.056
3.70	1.147	-9.014	.239	1.051
4.92	1.465	-11.409	.239	1.043
6.13	1.780	[illegible]	.252	1.028
7.34	2.080	-16.041	.264	1.018
.04	.038	-.236	.190	1.056

M = 1.30 Q = 8.400 RN = .4100

ALP	CN	CM	CAB	CAF
-4.90	-1.259	9.655	.204	.798
-3.65	-.919	7.067	.195	.818
-2.40	-.563	4.336	.139	.832
-1.15	-.219	1.705	.184	.845
.09	.114	-.833	.184	.848
1.32	.479	-3.225	.180	.848
2.57	.763	-5.744	[illegible]	[illegible]
[illegible]	[illegible]	-8.321	.191	.832
5.06	1.434	-10.840	.200	.823
6.79	1.263	-10.178	[illegible]	.793
.07	.078	-.544	.164	.858

M = 1.50 Q = 6.300 RN = .3860

ALP	CN	CM	CAB	CAF
[illegible]	[illegible]	[illegible]	[illegible]	.704
-4.88	-1.158	8.719	[illegible]	[illegible]
-3.64	-.852	6.458	.186	[illegible]
-2.41	[illegible]	4.212	.186	[illegible]
-1.18	-.264	1.868	.185	[illegible]
.05	.065	-.481	.184	.735
1.28	.375	-2.875	.190	.738
2.52	.670	-5.111	[illegible]	.744
3.75	.986	-7.605	.189	.744
5.00	1.299	-9.721	.176	.73[illegible]
7.51	1.937	-14.369	.224	.72[illegible]
7.51	1.936	-14.360	.224	.73[illegible]

M = 1.75 Q = 6.200 RN = .3803

ALP	CN	CM	CAB	CAF
6.22	1.372	[illegible]	.176	.619
5.17	1.129	8.251	.172	.626
4.10	.882	-6.499	.169	.628
3.03	.643	-4.698	.168	.638
1.98	.414	[illegible]	.174	.640
1.62	.293	[illegible]	.174	.643
.08	.102	-1.322	.175	.635
.34	.077	-.532	.175	.643
-.16	-.037	.233	.175	.641
-.78	[illegible]	1.059	.174	.639
-1.23	[illegible]	[illegible]	.174	.640
-1.77	-.369	2.688	.173	.636
-2.30	-.479	3.409	.173	.634
-3.33	-.694	5.086	.172	.625
-4.3[illegible]	[illegible]	6.843	.168	.631

M = 2.00 Q = 5.850 RN = .3400

ALP	CN	CM	CAB	CAF
6.24	1.205	-8.448	.188	.590
5.16	.985	-6.945	.182	.592
4.10	.776	-5.446	.181	.586
.03	.570	-4.026	.180	.588
1.98	.372	-2.525	.178	.595
1.43	.266	-1.594	.157	.590
.90	.168	-1.163	.156	.587
.38	.069	-.485	.154	.608
-.15	-.027	.192	.155	.589
-.69	-.129	.913	.155	.589
-1.21	-.229	1.614	.156	.594
-1.74	-.327	2.303	.156	.587
-2.27	-.427	3.011	.157	.586
-3.30	-.620	4.349	.157	.589
-4.35	-.828	5.805	.156	.594

M = 2.50 Q = 4.930 RN = .3200

ALP	CN	CM	CAB	CAF
6.15	1.045	-6.986	.155	.521
5.12	.856	-5.711	.155	.530
4.08	.673	-4.481	.152	.527
3.02	.496	-3.311	.150	.549
1.97	.321	-2.143	.157	.543
1.44	.232	-1.544	.166	.544
.92	.148	-.992	.171	.536
.39	.053	-.426	.174	.536
-.13	-.021	.141	.176	.538
-.67	-.106	.722	.176	.531
-1.17	-.191	1.277	.176	.528
-1.70	-.277	1.849	.176	.534
-2.22	-.361	2.404	.175	.516
-3.23	-.524	3.484	.170	.517
-4.27	-.702	4.663	.161	.503

M = 3.00 Q = 4.130 RN = .3100

ALP	CN	CM	CAB	CAF
5.97	.976	-6.309	.119	[illegible]
4.97	.791	-5.137	.115	.455
3.95	.618	-4.011	.116	.463
2.90	.453	-2.940	.118	.456
1.87	.287	-1.872	.119	.459
1.30	.199	-1.301	.119	.456
.80	.120	-.790	.120	.451
.28	.045	-.291	.120	.451
-.25	-.038	.250	.120	.453
-.77	-.119	.774	.120	.429
-1.28	-.198	1.287	.120	.440
-1.81	-.280	1.816	.120	.461
-2.33	-.362	2.350	.120	.448
-3.32	-.515	3.333	.120	.449
-4.36	-.684	4.415	.119	.448

M = 4.00 Q = 2.340 RN = .2500

ALP	CN	CM	CAB	CAF
5.92	[illegible]	-5.755	.066	.470
4.91	[illegible]	-4.608	.066	.422
3.89	[illegible]	-3.623	.066	.419
2.87	[illegible]	-2.648	.066	.411
1.84	[illegible]	-1.645	.065	.420
1.32	.185	-1.183	.065	.411
.81	[illegible]	-.736	.065	.410
.31	[illegible]	-.289	.066	.398
-.20	[illegible]	.284	.065	.400
-.73	-.154	.674	.066	.409
-1.24	-.173	1.092	.066	.416
-1.75	[illegible]	1.935	.065	.401
-2.25	-.317	2.614	.065	.401
-3.24	-.463	2.935	.065	.415
-4.26	[illegible]	3.911	.065	.409

M = 4.50 Q = 2.450 RN = .3200

ALP	CN	CM	CAB	CAF
5.92	.882	-5.612	.050	.394
4.91	.721	-4.588	.050	.405
3.89	.557	-3.560	.050	.395
2.86	.403	-2.574	.050	.399
1.84	.256	-1.641	.049	.406
1.31	.170	-1.144	.049	.399
.80	.109	-.718	.049	.392
.27	.039	-.255	.049	.399
-.21	-.030	.199	.049	.384
-.74	-.102	.657	.049	.389
-1.23	-.169	1.068	.049	.393
-1.75	-.24[illegible]	1.546	.049	.388
-2.26	-.316	2.031	.048	.399
-3.25	-.491	2.885	.049	.397
-4.27	-.611	3.891	.048	.398

Table 12. Aerodynamic Coefficients for Configuration B1T3X2

M = .80 Q = 5.700 RN = .3810

ALP	CN	CM	CAB	CAF
.44	-.132	6.918	.219	.897
-2.33	-.697	5.304	.204	.910
-2.22	-.474	3.719	.202	.921
-1.09	-.211	1.689	.198	.940
.03	.065	.323	.195	.955
1.19	.306	-2.594	.192	.947
[illegible]	.575	-4.413	.192	.940
[illegible]	.822	-6.31	.193	.943
[illegible]	1.034	-7.902	.197	.944
[illegible]	[illegible]	[illegible]	[illegible]	[illegible]

M = .90 Q = 6.520 RN = .4010

ALP	CN	CM	CAB	CAF
-4.55	-1.216	10.020	.173	.866
-3.41	-.941	7.865	.163	.869
-2.26	-.611	5.137	.150	.876
-1.10	-.253	2.165	.151	.871
.04	.100	-.942	.142	.863
1.21	.502	-4.255	.150	.887
2.34	.796	-6.640	.160	.904
3.49	[illegible]	-9.086	[illegible]	[illegible]
[illegible]	[illegible]	[illegible]	.160	.900
4.64	1.377	-11.240	.179	.908
5.94	1.917	[illegible]	[illegible]	[illegible]
[illegible]	.107	-.904	.150	.881

M = .95 Q = 6.750 RN = .4090

AL	CN	CM	CAB	CAF
-4.50	[illegible]	6.866	.222	.938
-3.35	-.610	4.672	.203	.976
-2.21	-.342	2.594	.195	1.000
-1.09	-.159	1.223	.197	1.027
.03	.041	-.282	.195	[illegible]
[illegible]	.264	[illegible]	[illegible]	[illegible]
[illegible]	.600	-3.472	.192	1.004
3.04	.742	-5.633	.193	1.001
4.50	1.024	-7.861	.201	.990
6.07	[illegible]	[illegible]	[illegible]	[illegible]
[illegible]	-.152	1.169	.201	1.014

M = 1.00 Q = 7.090 RN = .4190

ALP	CN	CM	CAB	CAF
-4.56	-.991	7.817	.271	1.008
-3.40	-.715	5.673	.267	1.024
-2.25	-.466	3.725	.257	[illegible]
-1.10	-.202	[illegible]	[illegible]	[illegible]
[illegible]	.067	-.500	.242	1.077
1.19	.334	-2.622	.243	1.078
2.34	.596	-4.679	.248	1.076
3.50	.874	-6.860	.252	[illegible]
[illegible]	[illegible]	[illegible]	.255	1.053
6.06	1.723	-13.953	.263	1.028

M = 1.05 Q = 7.400 RN = .4220

ALP	CN	CM	CAB	CAF
-4.63	-1.100	9.605	.284	1.040
-3.46	-.865	7.075	.268	1.071
-2.29	-.570	4.106	.266	1.071
-1.13	-.597	4.561	.261	1.085
.03	.043	-.314	.264	1.092
1.19	.340	-2.735	.262	1.100
2.36	.669	-5.426	.262	1.106
3.54	.985	-7.985	.261	1.104
4.71	1.293	-10.446	.268	1.095
7.03	1.824	-14.540	.289	1.061
7.04	1.851	-14.805	.287	1.062
-1.12	-.240	1.981	.261	1.085

M = 1.10 Q = 7.700 RN = .4230

ALP	CN	CM	CAB	CAF
-4.66	-1.193	9.717	.277	1.027
-3.48	-.878	7.186	.273	1.045
-2.31	-.566	4.653	.273	1.058
-1.13	-.250	2.073	.272	1.063
.04	.057	-.433	.273	1.062
1.20	.342	[illegible]	.274	1.068
2.38	.669	[illegible]	.276	1.066
3.56	.984	-7.946	.276	1.063
4.74	1.299	-10.463	.280	1.051
7.10	1.883	-15.063	.303	1.026

M = 1.30 Q = 8.400 RN = .4160

ALP	CN	CM	CAB	CAF
[illegible]	[illegible]	[illegible]	[illegible]	[illegible]
-3.75	-1.246	10.178	.251	.817
-2.53	-.913	7.520	.249	.834
-2.33	-.570	4.716	.248	.848
-1.11	-.209	1.753	.248	.856
4.90	1.447	-11.648	.255	.830
6.56	1.269	-11.249	.278	.804
4.71	1.093	-8.761	.240	.628
7.05	1.559	-12.319	.264	.621
.09	.134	-1.062	.249	.853
1.28	.453	-3.649	.248	.855

M = 1.50 Q = 8.560 RN = .3860

ALP	CN	CM	CAB	CAF
-4.73	-1.132	9.085	.215	.710
-3.52	-.818	6.593	.213	.723
-2.33	-.516	4.160	.216	.730
-1.13	-.210	1.708	.216	.730
.04	.057	-.435	.215	.730
1.24	.361	-2.880	.215	.737
2.44	.674	-5.374	.211	.744
3.64	.986	-7.878	.212	.742
4.85	1.299	-10.355	.216	.741
7.30	1.929	-15.219	.235	.728
.04	.048	-.358	.217	.728

M = 1.75 Q = 6.200 RN = .3600

ALP	CN	CM	CAB	CAF
6.16	1.403	-10.874	.311	.503
5.12	1.155	-8.995	.311	.496
4.08	.907	-7.067	.311	.497
3.02	.657	-5.108	.311	.503
1.97	.425	-3.302	.311	.506
1.41	.299	-2.320	.311	.510
.89	.187	-1.446	.311	.508
.36	.075	-.584	.311	.515
-.15	-.032	.247	.311	.516
-.68	-.144	1.120	.311	.511
-1.19	-.253	1.966	.311	.508
-1.72	-.370	2.868	.311	.506
-2.26	-.485	3.760	.311	.501
-3.27	-.711	5.503	.311	.499
-4.33	-.962	7.473	.311	.497

M = 2.00 Q = 5.850 RN = .3400

ALP	CN	CM	CAB	CAF
6.13	1.234	-9.247	.216	.579
5.09	1.010	-7.586	.217	.594
4.04	.791	-5.954	.225	.602
2.98	.581	-4.384	.234	.603
1.93	.377	-2.849	.239	.598
1.39	.268	-2.021	.239	.601
.88	.168	-1.261	.241	.599
.34	.066	-.504	.243	.596
-.17	-.033	.253	.245	.597
-.71	-.136	1.023	.246	.593
-1.23	-.238	1.795	.245	.593
-1.74	-.339	2.549	.243	.592
-2.27	-.442	3.315	.241	.589
-3.30	-.642	4.801	.232	.586
-4.35	-.855	6.385	.221	.586

M = 2.50 Q = 4.930 RN = .3200

ALP	CN	CM	CAB	CAF
6.11	1.102	-7.869	.139	.514
5.07	.905	-6.494	.138	.517
4.03	.710	-5.104	.155	.530
2.98	.521	-3.756	.153	.522
1.94	.338	-2.444	.151	.526
1.38	.238	-1.720	.151	.522
.88	.151	-1.091	.150	.527
.35	.061	-.444	.150	.517
-.15	-.027	.197	.150	.517
-.69	-.119	.862	.150	.528
-1.20	-.208	1.505	.150	.520
-1.73	-.298	2.150	.151	.519
-2.25	-.388	2.798	.152	.514
-3.25	-.563	4.039	.153	.519
-4.29	-.753	5.398	.154	.528

M = 3.00 Q = 4.130 RN = .3100

ALP	CN	CM	CAB	CAF
6.06	1.062	-7.455	.110	.461
5.06	.875	-6.176	.109	.458
4.01	.689	-4.891	.107	.467
2.97	.512	-3.650	.105	.472
1.94	.335	-2.402	.103	.461
1.38	.235	-1.675	.102	.460
.89	.149	-1.072	.101	.460
.37	.063	-.453	.101	.467
-.15	-.027	.192	.101	.467
-.67	-.114	.819	.102	.467
-1.18	-.200	1.425	.102	.463
-1.69	-.289	2.059	.101	.468
-2.20	-.376	2.676	.101	.458
-3.22	-.546	3.871	.102	.453
-4.25	-.725	5.117	.103	.459

M = 4.00 Q = 2.340 RN = .2500

ALP	CN	CM	CAB	CAF
5.83	.944	-6.448	.060	.425
4.82	.761	-5.210	.060	.424
3.80	.590	-4.056	.060	.407
2.79	.431	-2.983	.060	.416
1.77	.271	-1.872	.060	.423
1.22	.182	-1.297	.060	.409
.73	.109	-.762	.060	.408
.20	.033	-.238	.060	.399
-.30	-.045	.317	.061	.396
-.81	-.123	.854	.061	.453
-1.30	-.194	1.348	.061	.464
-1.81	-.271	1.877	.061	.423
-2.32	-.356	2.465	.060	.414
-3.32	-.509	3.501	.060	.416
-4.33	-.678	4.592	.060	.408

M = 4.50 Q = 2.450 RN = .3200

ALP	CN	CM	CAB	CAF
5.88	.919	-6.192	.045	.373
4.88	.743	-5.038	.045	.379
3.86	.572	-3.891	.045	.473
2.84	.423	-2.884	.045	.362
1.82	.265	-1.829	.045	.375
1.27	.178	-1.219	.045	.375
.79	.110	-.754	.045	.371
.27	.040	-.276	.045	.371
-.22	-.032	.223	.045	[illegible]
-.74	-.105	.722	.045	.365
-1.26	-.178	1.213	.045	.367
-1.77	-.253	1.726	.045	.372
-2.27	-.331	2.260	.044	.434
-3.26	-.477	3.236	.044	.377
-4.28	-.636	4.276	.044	.449

Table 13. Aerodynamic Coefficients for Configuration B1T3X3

M = .80 Q = 5.700 RN = .[illegible]

ALP	CN	CM	CAB	CAF
-4.36	[illegible]	6.432	.290	.836
-3.26	-.599	[illegible]	.266	[illegible]
-2.18	-.428	[illegible]	[illegible]	[illegible]
[illegible]	[illegible]	[illegible]	.250	.869
.02	.000	-.502	.242	[illegible]
1.12	.287	-2.331	.243	.874
2.22	.504	-4.238	.247	.876
3.31	.700	-5.635	.299	.876
4.41	.935	-7.443	.271	[illegible]
6.62	1.427	-11.336	.284	.854

M = 1.05 Q = 7.400 RN = .4220

ALP	CN	CM	CAB	CAF
-4.47	-1.012	8.508	.311	.988
-3.35	-.797	6.217	.298	1.011
-2.22	-.478	4.073	.294	1.027
-1.09	-.223	1.938	.288	1.035
.02	.034	-.258	.286	1.031
1.15	.306	-2.973	.287	1.041
1.15	.383	-2.552	.287	1.042
2.28	.577	-4.037	.287	1.049
3.42	.850	-7.107	.291	1.040
4.56	1.124	-9.368	.296	1.032
5.69	1.693	-14.069	.317	1.011

M = 1.75 Q = 6.200 RN = .3600

ALP	CN	CM	CAB	CAF
6.22	1.523	-12.623	.259	.640
5.18	1.260	-10.507	.254	.643
4.14	.993	-8.278	.253	.637
3.09	.726	-6.050	.250	.642
2.05	.478	-3.981	.248	.630
1.00	.245	-2.056	.248	.645
.99	.228	-1.899	.248	.649
.46	.107	-.893	.247	.644
-.06	-.012	.109	.247	.646
-.58	-.124	1.129	.248	.644
-1.10	-.247	2.132	.249	.647
-1.61	-.375	3.127	.249	.646
-2.15	-.502	4.168	.251	.642
-3.19	-.739	6.118	.256	.634
-4.19	-1.001	8.305	.263	.630

M = 4.00 Q = 2.340 RN = .2500

ALP	CN	CM	CAB	CAF
5.87	.957	-6.800	.054	.399
4.80	.775	-5.557	.054	.396
3.87	.605	-4.348	.054	.405
2.83	.442	-3.208	.055	.402
1.82	.279	-2.029	.055	.399
1.28	.193	-1.392	.056	.389
.79	.117	-.855	.056	.39[illegible]
.27	.042	-.311	.057	.38[illegible]
-.22	-.033	.246	.057	.38[illegible]
-.74	-.111	.818	.058	.37[illegible]
-1.25	-.188	1.365	.058	.36[illegible]
-1.74	-.265	1.922	.058	.37[illegible]
-2.27	-.352	2.543	.058	.36[illegible]
-3.26	-.501	3.601	.057	.37[illegible]
-4.26	-.666	4.765	.057	.3[illegible]

M = .90 Q = 6.520 RN = .4010

ALP	CN	CM	CAB	CAF
-4.44	[illegible]	[illegible]	[illegible]	[illegible]
-3.33	[illegible]	9.792	.250	.831
-2.22	[illegible]	[illegible]	[illegible]	.837
-1.00	-.954	6.027	.214	.838
.03	-.264	1.956	.206	.826
1.15	.087	-.709	.200	.824
2.27	.409	-3.504	.213	.835
3.35	.749	-6.545	.226	.838
4.52	[illegible]	-8.047	.234	.857
6.77	[illegible]	[illegible]	.233	.856
	1.053	-15.654	.262	.837

M = 1.10 Q = 7.700 RN = .4230

ALP	CN	CM	CAB	CAF
-4.53	-1.096	9.305	.316	1.007
-3.30	-.812	6.929	.306	1.026
-2.24	-.517	4.436	.360	1.040
-1.10	-.227	1.973	.301	1.045
.03	.049	-.377	.301	1.043
1.16	.309	-2.968	.300	1.049
2.30	.600	-5.099	.299	1.053
3.45	.880	-7.446	.314	1.032
4.59	1.175	-9.836	.304	1.039
6.89	1.739	-14.475	.328	1.013

M = 2.00 Q = 5.850 RN = .3400

ALP	CN	CM	CAB	CAF
6.06	1.356	-10.965	.191	.597
5.03	1.122	-9.137	.200	.598
3.99	.888	-7.263	.201	.591
2.94	.658	-5.401	.197	.592
1.90	.428	-3.530	.191	.596
1.34	.301	-2.475	.188	.593
.85	.187	-1.542	.188	.597
.32	.071	-.589	.189	.593
-.27	-.049	.404	.190	.591
-.73	-.161	1.322	.191	.589
-1.24	-.280	2.295	.192	.592
-1.76	-.395	3.245	.194	.586
-2.28	-.510	4.179	.196	.596
-3.33	-.730	5.943	.200	.587
-4.33	-.960	7.791	.201	.583

M = 4.[illegible] Q = 2.450 RN = .3200

ALP	CN	CM	CAB	CAF
5.91	.920	-6.457	.045	.381
4.88	.749	-5.277	.045	.392
3.87	.583	-4.124	.045	.387
2.84	.427	-3.000	.045	.382
1.83	.271	-1.949	.045	.391
1.31	.188	-1.342	.045	.382
.81	.115	-.809	.045	.379
.29	.042	-.304	.046	.379
-.21	-.033	.223	.046	.424
-.74	-.106	.751	.047	.373
-1.23	-.174	1.234	.046	.369
-1.74	-.252	1.802	.046	.375
-2.26	-.332	2.369	.046	.403
-3.25	-.478	3.378	.045	.382
-4.26	-.633	4.457	.045	.383

M = .95 Q = 6.790 RN = .4090

ALP	CN	CM	CAB	CAF
-4.45	-1.007	[illegible]	[illegible]	[illegible]
-3.32	-.725	6.100	.237	.900
-2.20	-.456	3.850	.230	.913
-1.09	-.202	1.721	.229	.920
.03	.052	-.418	.230	.916
1.13	.289	-2.402	.229	.916
2.25	.550	-4.654	.232	.911
3.36	.836	-6.979	.236	.927
4.51	1.129	-9.430	.237	.918
6.78	1.680	-14.034	.254	.905

M = 1.30 Q = 8.400 RN = .4160

ALP	CN	CM	CAB	CAF
-4.61	-1.250	10.676	.296	.819
-3.44	-.907	[illegible]	.279	.841
-2.27	-.566	4.858	.261	.852
-1.10	-.224	1.598	.254	.866
.06	.102	-.827	.250	[illegible]
1.22	.407	-3.437	.253	.869
2.38	.734	-6.262	.251	.847
3.54	1.069	-9.097	.271	.850
4.74	1.399	-11.870	.283	.843
7.10	1.997	-16.756	.320	.867
-2.27	-.566	4.950	.263	.846
-2.27	-.569	4.967	.265	.853

M = 2.50 Q = 4.930 RN = .3200

ALP	CN	CM	CAB	CAF
6.05	1.202	-9.353	.142	.512
5.02	.987	-7.711	.141	.513
3.98	.764	-5.160	.137	.516
2.95	.579	-4.561	.134	.508
1.91	.375	-2.971	.132	.504
1.37	.267	-2.111	.131	.507
.86	.168	-1.330	.131	.504
.34	.067	-.537	.130	.508
-.17	-.033	.286	.130	.511
-.68	-.134	1.065	.131	.512
-1.21	-.237	1.879	.133	.500
-1.72	-.337	2.663	.134	.507
-2.23	-.434	3.422	.135	.494
-3.25	-.634	4.970	.136	.515
-4.29	-.839	6.544	.138	.514

M = 1.50 Q = 7.000 RN = .4190

ALP	CN	CM	CAB	CAF
-4.67	-.996	8.340	.289	.930
-3.53	-.718	6.035	.279	.954
-2.21	-.454	3.823	.273	.970
-1.08	-.184	1.564	.269	.978
.02	.046	-.379	.269	.972
1.14	.303	-2.543	.267	.979
2.27	.572	-4.796	.272	.977
3.40	.854	-6.958	.272	.969
4.53	1.107	-9.215	.277	.965
6.81	1.654	-13.680	.302	.958

M = 1.50 Q = 8.560 RN = .3860

ALP	CN	CM	CAB	CAF
-4.61	-1.136	9.639	.3[illegible]	.735
-3.45	-.835	7.110	.3[illegible]	.740
-2.28	-.530	4.521	.341	.743
-1.12	-.224	1.927	.344	.739
.03	.046	-.377	.347	.740
1.20	.354	-2.982	.344	.752
2.37	.672	-5.692	.339	.763
3.54	.980	-8.276	.342	.768
4.72	1.295	-10.880	.346	.766
7.10	1.928	-16.[illegible]	.362	.746
.03	.046	-.361	.348	.737

M = 3.00 Q = 4.130 RN = .3100

ALP	CN	CM	CAB	CAF
5.95	1.109	-8.291	.101	.476
4.94	.907	-6.843	.101	.462
3.90	.707	-5.361	.100	.472
2.86	.516	-3.930	.099	.460
1.84	.330	-2.532	.098	.467
1.29	.229	-1.747	.097	.465
.79	.139	-1.050	.097	.472
.26	.048	-.372	.097	.490
-.23	-.042	.325	.097	.466
-.77	-.137	1.050	.097	.466
-1.28	-.229	1.742	.097	[illegible]
-1.80	-.323	2.436	[illegible]	.471
-2.29	-.409	[illegible]	.095	.455
-3.30	[illegible]	4.437	.098	.472
[illegible]	-.776	5.858	.099	.480

Table 14. Aerodynamic Coefficients for Configuration B1T4X1

M = .80 Q = 5.700 RN = .3810

ALP	CN	CM	CAB	CAF
[illegible]	[illegible]	3.768	.192	.688
[illegible]	-.999	4.100	.146	.705
[illegible]	[illegible]	2.993	.142	.718
[illegible]	-.159	1.146	.138	.732
.02	.031	-.221	.136	.737
[illegible]	.222	-1.608	.135	.735
[illegible]	.428	-3.120	.134	.732
[illegible]	.649	-4.737	.130	.725
[illegible]	.857	-6.300	.145	.722
[illegible]	1.268	-9.106	.154	.709
[illegible]	.022	-.151	.137	.741

M = .90 Q = 6.520 RN = .4010

ALP	CN	CM	CAB	CAF
-4.50	-.872	6.636	.119	[illegible]
-3.35	-.577	4.290	.109	.657
-2.22	-.353	2.621	.099	.650
-1.09	-.143	1.053	.093	.662
.04	.075	-.598	.091	.663
1.16	.277	-2.096	.093	.672
2.29	.491	-3.676	.098	.680
3.42	.702	-5.264	.103	.687
4.56	1.018	-7.706	.113	.687
6.88	1.599	-12.350	.135	.688
4.50	1.057	-6.163	.115	.693

M = .95 Q = 6.750 RN = .4090

ALP	CN	CM	CAB	CAF
-4.51	-.850	6.277	.179	[illegible]
-3.36	-.607	4.665	.185	.781
-2.24	-.418	3.236	.185	.805
-1.12	-.182	1.599	.180	.824
.04	[illegible]	-.806	.265	.874
1.18	.303	[illegible]	.176	[illegible]
2.32	.548	-4.229	.172	.824
3.47	.802	-6.210	.171	.822
4.57	.910	-6.709	.162	.794
6.84	1.381	-10.375	.169	.774
4.58	.938	-7.070	.165	.807
.03	.051	-.399	.180	.834
.03	.049	-.383	.181	.826

M = 1.00 Q = 7.090 RN = .4190

ALP	CN	CM	CAB	CAF
-4.59	-1.047	8.341	.246	.770
-3.43	-.764	6.092	.227	.792
-2.27	-.477	3.792	.219	.800
-1.11	-.195	1.524	.219	.794
.04	.083	-.671	.220	.798
1.20	.352	-2.789	.218	.797
2.36	.623	-4.935	.227	.794
3.52	.901	-7.132	.237	.794
4.69	1.157	-9.144	.241	.790
6.98	1.639	-12.715	.251	.761
6.98	1.630	-12.724	.251	.761
[illegible]	.046	-.400	.218	.816

M = 1.05 Q = 7.440 RN = .4220

ALP	CN	CM	CAB	CAF
-4.60	-1.083	7.953	.254	.764
-3.44	-.754	6.008	.237	.790
-2.28	-.485	3.894	.227	.801
-1.12	-.216	1.726	.221	.806
.04	.087	-.526	.225	.801
1.20	.331	-2.619	.228	.809
2.36	.601	-4.794	.235	.810
3.52	.872	-6.894	.247	.809
4.68	1.112	-8.729	.253	.801
7.00	1.589	-12.275	.283	.782
.04	.054	-.405	.222	.811

M = 1.10 Q = 7.700 RN = .4230

ALP	CN	CM	CAB	CAF
-4.62	-.970	7.572	.235	.743
-3.45	-.723	5.699	.228	.766
-2.29	-.477	3.808	.226	.779
-1.12	-.206	1.661	.229	.787
.04	.057	-.444	.257	.786
1.21	.324	-2.534	.233	.785
2.37	.575	-4.505	.225	.786
3.53	.815	-6.337	.233	.775
4.69	1.050	-8.095	.242	.770
7.02	1.494	-11.370	.275	.754
.04	.051	-.368	.237	.796
-4.61	-.940	7.912	.236	.744

M = 1.30 Q = 8.400 RN = .4160

ALP	CN	CM	CAB	CAF
-4.69	-.917	6.946	.210	.570
-3.50	-.678	5.149	.208	.593
-2.31	-.436	3.349	.205	.659
-1.12	-.178	1.394	.201	.623
.06	.076	-.557	.196	.629
1.25	.332	-2.528	.194	.627
2.44	.562	-4.209	.197	.618
3.62	.791	-5.910	.202	.603
4.80	1.025	-7.632	.208	.591
7.19	1.482	-10.896	.227	.577
.06	.067	-.479	.197	.641

M = 1.50 Q = 8.560 RN = .3860

ALP	CN	CM	CAB	CAF
-4.65	-.889	5.941	.211	.540
-3.48	-.587	4.324	.210	.553
-2.30	-.373	2.747	.210	.565
-1.13	-.160	1.186	.211	.576
.04	.051	-.372	.208	.579
1.22	.260	-1.886	.207	.580
2.39	.465	-3.372	.206	.582
3.57	.690	-5.023	.207	.571
4.76	.909	-6.591	.207	.562
7.16	1.360	-9.777	.220	.557
.04	.043	-.299	.209	.581

M = 1.75 Q = 6.200 RN = .3400

ALP	CN	CM	CAB	CAF
6.2[illegible]	1.013	-7.081	.185	.515
5.17	.830	-5.810	.178	.516
4.1[illegible]	.650	-4.540	.175	.517
3.06	.476	-3.329	.176	.520
2.0[illegible]	.312	-2.185	.177	.525
1.05	.222	-1.540	.177	.519
.96	.163	-.999	.177	.527
.61	.063	-.440	.177	.524
-.10	-.015	.106	.177	.525
-.66	-.008	.640	.177	.524
-1.15	-.176	1.231	.177	.525
-1.68	-.258	1.796	.177	.527
-2.21	-.340	2.369	.178	.520
-3.23	-.[illegible]	3.464	.179	.517
-4.[illegible]	-.67[illegible]	4.693	.178	.520

M = 2.00 Q = 5.850 RN = .3400

ALP	CN	CM	CAB	CAF
6.22	.899	-5.940	.172	.496
5.19	.741	-4.935	.167	.492
4.13	.581	-3.873	.163	.493
3.09	.431	-2.877	.164	.492
2.03	.283	-1.894	.166	.498
1.47	.203	-1.353	.167	.496
.98	.136	-.894	.167	.498
.42	.059	-.399	.167	.500
-.06	-.008	.052	.167	.497
-.60	-.083	.592	.166	.496
-1.13	-.156	1.047	.166	.503
-1.63	-.227	1.516	.166	.500
-2.18	-.303	2.021	.165	.502
-3.19	-.446	2.964	.164	.491
-4.23	-.602	3.990	.164	.485

M = 2.50 Q = 4.930 RN = .3200

ALP	CN	CM	CAB	CAF
6.12	.850	-5.438	.147	.435
5.09	.689	-4.422	.148	.428
4.05	.540	-3.463	.150	.436
3.01	.399	-2.561	.153	.439
1.96	.258	-1.661	.156	.434
1.42	.184	-1.188	.159	.439
.90	.116	-.747	.162	.432
.37	.049	-.318	.164	.444
-.12	-.015	.105	.165	.437
-.65	-.085	.547	.165	.437
-1.16	-.150	.964	.165	.428
-1.69	-.221	1.421	.164	.431
-2.20	-.288	1.846	.162	.428
-3.22	-.423	2.765	.159	.436
-4.25	-.567	3.622	.156	.440

M = 3.00 Q = 4.130 RN = .3100

ALP	CN	CM	CAB	CAF
5.97	.823	-5.081	.112	.399
4.94	.661	-4.140	.111	.390
3.91	.513	-3.216	.111	.379
2.86	.376	-2.353	.111	.399
1.83	.238	-1.494	.111	.394
1.29	.165	-1.039	.111	.393
.78	.100	-.633	.110	.419
.25	.032	-.206	.110	.399
-.24	-.032	.205	.110	.397
-.78	-.099	.624	.110	.390
-1.28	-.164	1.033	.110	.399
-1.81	-.232	1.456	.110	.392
-2.32	-.297	1.863	.111	.399
-3.32	-.428	2.677	.111	.390
-4.35	-.568	3.560	.111	.398

M = 4.00 Q = 2.340 RN = .2500

ALP	CN	CM	CAB	CAF
5.90	.779	-[illegible].000	.059	.347
4.88	.621	-[illegible].824	.059	.344
3.86	.486	-2.987	.058	.351
2.84	.348	-2.146	.058	.362
1.83	.220	-1.368	.058	.337
1.28	.153	-.940	.058	.332
.79	.094	-.585	.058	.344
.24	.031	-.199	.059	.321
-.23	-.028	.119	.059	.325
-.75	-.091	.560	.060	.334
-1.25	-.151	.944	.060	.333
-1.78	-.213	1.316	.060	.324
-2.29	-.277	1.717	.059	.340
-3.27	-.400	2.462	.059	.337
-4.28	-.534	3.286	.059	.341

M = 4.50 Q = 2.450 RN = .3200

ALP	CN	CM	CAB	CAF
5.86	.750	-4.596	.042	.346
4.85	.603	-3.596	.042	.347
3.83	.462	-2.827	.042	.344
2.81	.336	-2.062	.042	.351
1.80	.212	-1.311	.042	.350
1.26	.145	-.893	.042	.358
.76	.088	-.546	.042	.326
.23	.027	-.167	.043	.343
-.26	-.029	.180	.043	.324
-.79	-.091	.563	.043	.342
-1.27	-.147	.920	.043	.334
-1.78	-.206	1.276	.043	.339
-2.31	-.272	1.685	.043	.339
-3.30	-.394	2.433	.042	.341
-4.31	-.528	3.236	.042	.349

Table 15. Aerodynamic Coefficients for Configuration B1T4X2

M = .80 Q = 5.700 RN = .3810

ALP	CN	CM	CAB	CAF
-3.97	.077	-.699	.198	.782
-4.37	-.774	6.010	.206	.750
-3.76	-.552	4.240	.204	.753
-2.17	-.338	2.560	.199	.754
-1.07	-.127	.927	.197	.754
.03	.083	-.704	.198	.752
1.12	.270	-2.222	.199	.750
2.22	.487	-3.840	.200	.749
3.32	.704	-5.545	.204	.745
4.41	.916	-7.217	.208	.739
6.62	1.350	-10.538	.227	.714
-4.37	-.777	6.019	.208	.741

M = 1.05 Q = 7.440 RN = .4220

ALP	CN	CM	CAB	CAF
-4.49	-.902	7.332	.266	.802
-3.36	-.669	5.461	.260	.806
-2.22	-.431	3.541	.260	.809
-1.10	-.185	1.526	.259	.819
.03	.057	-.673	.258	.819
1.17	.311	-2.535	.257	.833
2.30	.559	-4.559	.260	.817
3.43	.796	-6.656	.263	.809
4.56	1.022	-8.278	.268	.796
6.84	1.490	-11.952	.293	.786
-3.96	.058	-.651	.261	.835

M = 1.50 Q = 8.560 RN = .3860

ALP	CN	CM	CAB	CAF
-4.60	-.851	6.679	.216	.538
-3.63	-.610	4.769	.210	.549
-2.27	-.388	3.035	.206	.557
-1.12	-.176	1.391	.206	.561
.03	.035	-.252	.206	.564
1.18	.262	-1.845	.207	.570
2.34	.461	-3.548	.208	.573
3.51	.695	-5.372	.211	.571
4.68	.960	-7.376	.218	.567
7.05	1.461	-11.338	.245	.551
.03	.033	-.228	.206	.574

M = 3.00 Q = 4.130 RN = .3100

ALP	CN	CM	CAB	CAF
5.96	.869	-5.880	.090	.401
4.94	.711	-4.842	.090	.389
3.91	.547	-3.804	.089	.389
2.87	.405	-2.776	.088	.404
1.85	.260	-1.789	.087	.400
1.30	.182	-1.261	.086	.389
.80	.110	-.758	.085	.406
.26	.038	-.263	.085	.395
-.23	-.031	.219	.085	.397
-.76	-.106	.732	.085	.404
-1.27	-.178	1.226	.086	.397
-1.78	-.249	1.711	.086	.384
-2.28	-.319	2.190	.087	.388
-3.29	-.458	3.124	.088	.401
-4.32	-.610	4.155	.089	.389

M = .90 Q = 6.520 RN = .4010

ALP	CN	CM	CAB	CAF
-4.43	-.923	7.509	.179	.669
-3.31	-.645	5.181	.165	.664
-2.19	-.392	3.135	.157	.654
-1.08	-.170	1.372	.155	.651
.03	.053	-.417	.154	.650
1.14	.310	-2.545	.157	.662
2.25	.521	-4.206	.163	.674
3.37	.811	-6.645	.171	.679
4.50	1.071	-8.744	.184	.687
6.75	1.627	-13.273	.228	.673
-4.43	-.909	7.366	.180	.667

M = 1.10 Q = 7.700 RN = .4230

ALP	CN	CM	CAB	CAF
-4.50	-.890	7.195	.277	.760
-4.50	-.895	7.254	.267	.792
-3.37	-.673	5.483	.265	.797
-2.23	-.438	3.607	.264	.796
-1.10	-.196	1.644	.262	.807
.04	.051	-.380	.260	.811
1.17	.302	-2.429	.260	.817
2.31	.542	-4.371	.261	.815
3.44	.766	-6.162	.260	.799
4.58	1.006	-8.052	.266	.789
6.87	1.473	-1.725	.295	.764
-4.51	-.904	7.332	.268	.763

M = 1.75 Q = 6.200 RN = .3600

ALP	CN	CM	CAB	CAF
6.20	1.085	-8.174	.230	.500
5.18	.888	-6.704	.228	.506
4.14	.697	-5.256	.223	.513
3.09	.513	-3.871	.223	.520
2.04	.336	-2.539	.228	.522
.96	.157	-1.173	.260	.521
.46	.075	-.572	.273	.523
-.06	-.010	.075	.279	.518
-.60	-.098	.738	.278	.515
-1.11	-.181	1.359	.267	.512
-1.62	-.265	1.985	.241	.510
-2.15	-.351	2.630	.230	.516
-3.17	-.523	3.912	.233	.523
-4.20	-.706	5.295	.236	.516

M = 4.00 Q = 2.340 RN = .2500

ALP	CN	CM	CAB	CAF
5.85	.784	-5.065	.051	.341
4.83	.632	-4.098	.051	.360
3.81	.486	-3.143	.051	.357
2.79	.354	-2.308	.051	.349
1.77	.221	-1.450	.050	.347
1.24	.151	-.982	.050	.335
.75	.091	-.599	.050	.344
.23	.029	-.197	.051	.353
-.26	-.033	.223	.051	.345
-.80	-.097	.649	.051	.323
-1.30	-.157	1.023	.051	.342
-1.79	-.221	1.439	.051	.349
-2.31	-.287	1.883	.050	.342
-3.29	-.410	2.662	.050	.334
-4.32	-.545	3.525	.050	.343

M = .95 Q = 6.750 RN = .4090

ALP	CN	CM	CAB	CAF
-4.43	-.754	5.836	.203	.753
-3.31	[illegible]	4.061	.203	.764
-2.20	-.329	2.443	.200	.770
-1.09	-.150	1.156	.193	.764
.01	.001	.063	[illegible]	.772
1.13	.192	-1.396	.194	[illegible]
2.24	.385	-2.893	.200	.767
3.36	.612	-4.688	.205	.768
4.48	.847	-6.560	.213	.761
6.74	1.394	-11.039	.254	.727
-4.42	-.751	5.814	.202	.761

M = 1.20 Q = 8.190 RN = .4320

ALP	CN	CM	CAB	CAF
-4.55	-.936	7.575	.249	.708
-3.40	-.692	5.642	.248	.717
-2.26	-.465	3.841	.246	.707
-1.11	-.215	1.824	.251	.734
.04	.051	-.357	.249	.713
1.19	.311	-2.513	.255	.713
2.34	.575	-4.640	.262	.711
3.49	.803	-6.447	.250	.719
4.64	1.036	-8.273	.255	.712
6.95	1.497	-1.808	.287	.686
-4.56	-.944	7.629	.250	.715

M = 2.00 Q = 5.850 RN = .3400

ALP	CN	CM	CAB	CAF
6.18	.987	-7.166	.187	.489
5.13	.817	-5.975	.188	.494
4.08	.644	-4.728	.189	.498
3.05	.477	-3.5.7	.194	.500
1.99	.314	-2.330	.206	.505
1.44	.226	-1.671	.208	.504
.91	.165	-1.071	.209	.501
.41	.065	-.481	.209	.499
-.11	-.017	.128	.209	.497
-.63	-.100	.742	.209	.498
-1.15	-.182	1.341	.210	.496
-1.67	-.264	1.952	.211	.498
-2.19	-.346	2.544	.211	.498
-3.21	-.503	3.679	.204	.498
-4.25	-.671	4.893	.193	.497

M = 4.50 Q = 2.450 RN = .3200

ALP	CN	CM	CAB	CAF
5.89	.765	-4.884	.040	.361
4.88	.613	-3.921	.040	.335
3.87	.472	-3.028	.040	.343
2.84	.343	-2.208	.039	.336
1.82	.220	-1.428	.039	.336
1.29	.149	-.960	.039	.345
.79	.092	-.598	.039	.342
.27	.031	-.210	.040	.332
-.22	-.025	.169	.040	.332
-.76	-.089	.575	.040	.350
-1.26	-.147	.960	.040	.331
-1.76	-.207	1.344	.039	.327
-2.26	-.275	1.780	.039	.329
-3.26	-.395	2.528	.038	.338
-4.27	-.536	3.436	.038	.345

M = 1.00 Q = 7.090 RN = .4190

ALP	CN	CM	CAB	CAF
-4.47	-.908	7.381	.241	.796
-3.34	-.666	5.422	.240	.798
-2.22	-.435	3.548	.240	.805
-1.09	-.185	1.529	.240	.809
.03	.049	-.396	.237	.810
1.15	.293	-2.380	.237	.819
2.28	.500	-3.981	.241	.817
3.40	.721	-5.758	.246	.788
4.54	.953	-7.529	.254	.776
6.77	[illegible]	-10.982	.281	.743
-4.47	-.900	[illegible]	.239	.793

M = 1.30 Q = 8.400 RN = .4360

ALP	CN	CM	CAB	CAF
-4.60	-.967	7.873	.236	.615
-3.43	-.712	5.824	.232	.638
-2.27	-.448	3.687	.232	.652
-1.11	-.185	1.541	.232	.663
.05	.063	-.466	.232	.669
1.20	.313	-2.510	.234	.659
2.37	.575	-4.631	.232	.649
3.54	.841	-6.772	.232	.643
2.48	.791	-6.429	.249	.852
3.69	1.123	-9.106	.250	.841

M = 2.50 Q = 4.930 RN = .3200

ALP	CN	CM	CAB	CAF
6.06	.940	-6.631	.140	.425
5.03	.770	-5.474	.137	.427
3.99	.603	-4.306	.134	.430
2.95	.443	-3.178	.136	.431
1.92	.287	-2.073	.135	.435
1.37	.203	-1.462	.134	.425
.85	.125	-.902	.133	.430
.34	.052	-.377	.133	.432
-.17	-.025	.187	.133	.422
-.70	-.104	.749	.132	.426
-1.20	-.178	1.278	.132	.427
-1.73	-.258	1.847	.133	.436
-2.24	-.333	2.380	.135	.423
-3.24	-.481	3.422	.137	.436
-4.28	-.644	4.564	.137	.434

Table 16. Aerodynamic Coefficients for Configuration B1T4X3

M = .80 Q = 5.700 RN = .3810

ALP	CN	CM	CAB	CAF
-4.32	-.758	6.139	.303	.638
-3.23	-.538	4.309	.289	.648
-2.14	-.322	2.547	.269	.662
-1.06	-.123	.897	.253	.669
.02	.085	-.772	.249	.681
1.11	.290	-2.444	.259	.687
2.19	.486	-4.036	.279	.681
3.27	.691	-5.705	.301	.669
4.36	.917	-7.559	.321	.647
6.54	1.357	-11.163	.345	.624
.02	.082	-.747	.248	.691

M = .90 Q = 6.520 RN = .4010

ALP	CN	CM	CAB	CAF
-4.37	-.969	8.350	.297	.596
-3.27	-.703	6.052	.275	.597
-2.17	-.431	3.674	.250	.603
-1.07	-.144	1.182	.226	.619
.03	.099	-.929	.219	.641
1.13	.375	-3.331	.238	.642
2.22	.592	-5.132	.263	.634
3.32	.845	-7.309	.289	.623
4.43	1.132	-9.783	.312	.611
6.63	1.635	-14.047	.337	.604
-4.38	-.984	8.471	.295	.593

M = .95 Q = 6.750 RN = .4090

ALP	CN	CM	CAB	CAF
-4.37	-.738	5.964	.285	.653
-3.27	-.523	4.203	.276	.659
-2.17	-.329	2.614	.269	.678
-1.08	-.140	1.106	.260	.687
.02	.039	-.323	.254	.695
1.12	.217	-1.721	.257	.705
2.22	.408	-3.253	.265	.704
3.31	.610	-4.902	.274	.686
4.41	.822	-6.663	.286	.672
6.63	1.298	-10.610	.322	.643
-4.38	-.749	6.059	.282	.658

M = 1.00 Q = 7.090 RN = .4190

ALP	CN	CM	CAB	CAF
-4.39	-.752	6.094	.326	.705
-3.29	-.544	4.395	.323	.719
-2.18	-.332	2.661	.317	.731
-1.08	-.142	1.130	.309	.743
.02	.045	-.374	.301	.752
1.13	.242	-1.946	.301	.755
2.23	.441	-3.576	.309	.750
3.34	.650	-5.298	.319	.736
4.44	.867	-7.085	.336	.720
6.67	1.327	-10.872	.379	.686
-4.39	-.750	6.107	.329	.706

M = 1.05 Q = 7.460 RN = .4220

ALP	CN	CM	CAB	CAF
-4.41	-.805	6.638	.365	.732
-3.30	-.577	4.761	.355	.741
-2.19	-.373	3.076	.338	.760
-1.08	-.153	1.249	.321	.781
.03	.061	-.507	.313	.793
1.14	.260	-2.143	.318	.795
2.24	.464	-3.813	.331	.785
3.35	.673	-5.551	.346	.757
4.47	.916	-7.565	.363	.748
6.71	1.399	-11.555	.405	.777
-4.4.	-.811	6.697	.366	.734
3.35	.670	-5.523	.343	.755

M = 1.10 Q = 7.700 RN = .4230

ALP	CN	CM	CAB	CAF
-4.44	-.871	7.302	.372	.729
-3.32	-.640	5.376	.353	.739
-2.20	-.403	3.397	.333	.758
-2.09	-.180	1.518	.312	.781
-1.08	-.175	1.485	.313	.783
.03	.053	-.423	.303	.795
1.14	.267	-2.222	.312	.797
2.25	.498	-4.160	.331	.770
3.38	.745	-6.231	.353	.754
4.49	.975	-8.144	.368	.736
6.75	1.457	-12.123	.425	.707
-4.44	-.872	7.323	.369	.728

M = 1.20 Q = 8.190 RN = .4320

ALP	CN	CM	CAB	CAF
-3.97	.034	-.226	.273	.753
-4.47	-.934	7.922	.366	.676
-3.34	-.691	5.901	.326	.688
-2.22	-.454	3.910	.296	.708
-1.08	-.197	1.763	.276	.722
.04	.046	-.327	.273	.734
1.17	.304	-2.520	.277	.732
2.29	.547	-4.588	.302	.720
3.41	.785	-6.596	.334	.701
4.55	1.032	-8.632	.371	.684
6.82	1.521	-12.686	.404	.673
.03	.037	-.256	.273	.740

M = 1.30 Q = 8.400 RN = .4160

ALP	CN	CM	CAB	CAF
-4.50	-.982	8.462	.314	.590
-3.36	-.715	6.185	.306	.606
-2.22	-.446	3.874	.303	.617
-1.08	-.185	1.639	.263	.630
.05	.069	-.536	.250	.640
1.18	.323	-2.710	.297	.628
2.32	.585	-4.952	.314	.622
3.46	.846	-7.171	.318	.615
4.61	1.111	-9.394	.329	.614
6.91	1.605	-13.434	.347	.614
.05	.060	-.454	.251	.642

M = 1.50 Q = 8.560 RN = .3860

ALP	CN	CM	CAB	CAF
-4.52	-.916	7.727	.274	.540
-3.37	-.673	5.703	.275	.567
-2.24	-.436	3.717	.294	.573
-1.10	-.200	1.728	.304	.574
.03	.042	-.327	.308	.577
1.17	.284	-2.374	.308	.586
2.31	.533	-4.466	.296	.590
3.45	.779	-6.517	.270	.588
4.60	1.027	-8.572	.275	.591
6.93	1.551	-12.853	.299	.580
.03	.039	-.289	.310	.585

M = 1.75 Q = 6.200 RN = .3600

ALP	CN	CM	CAB	CAF
6.27	1.198	-9.672	.216	.515
5.25	.995	-8.083	.213	.515
4.20	.790	-6.441	.212	.516
3.17	.591	-4.826	.207	.514
2.14	.395	-3.230	.202	.522
1.58	.293	-2.398	.200	.520
1.08	.200	-1.629	.199	.528
.55	.104	-.869	.198	.524
.05	.010	-.079	.196	.526
-.49	-.001	.794	.196	.523
-1.01	-.187	1.523	.200	.522
-1.52	-.281	2.299	.205	.520
-2.03	-.377	3.078	.209	.519
-3.04	-.568	4.610	.214	.512
-4.07	-.766	6.225	.219	.514

M = 2.00 Q = 5.850 RN = .3400

ALP	CN	CM	CAB	CAF
6.09	1.065	-8.339	.170	.485
5.09	.880	-6.940	.166	.478
4.04	.693	-5.484	.162	.484
3.01	.517	-4.118	.158	.491
1.96	.335	-2.674	.155	.485
1.43	.242	-1.922	.156	.485
.91	.153	-1.216	.155	.485
.39	.066	-.534	.154	.480
-.13	-.022	.176	.155	.482
-.64	-.108	.864	.154	.480
-1.16	-.199	1.581	.155	.480
-1.69	-.287	2.272	.156	.476
-2.21	-.376	2.976	.161	.478
-3.20	-.543	4.272	.166	.471
-4.23	-.726	5.706	.168	.474

M = 2.50 Q = 4.930 RN = .3200

ALP	CN	CM	CAB	CAF
6.06	.964	-7.188	.114	.431
5.04	.796	-5.971	.112	.437
4.00	.620	-4.676	.110	.432
2.97	.454	-3.456	.108	.434
1.93	.294	-2.243	.106	.441
1.39	.210	-1.592	.107	.428
.88	.133	-1.010	.108	.428
.36	.055	-.420	.108	.428
-.15	-.023	.177	.107	.429
-.66	-.101	.767	.107	.424
-1.18	-.182	1.373	.108	.433
-1.70	-.260	1.972	.109	.435
-2.20	-.338	2.552	.110	.425
-3.20	-.492	3.691	.109	.432
-4.24	-.657	4.920	.109	.433

M = 3.00 Q = 4.130 RN = .3100

ALP	CN	CM	CAB	CAF
5.92	.871	-6.167	.087	.406
4.93	.713	-5.080	.086	.400
3.90	.554	-3.972	.084	.399
2.86	.402	-2.902	.083	.404
1.84	.257	-1.854	.082	.409
1.29	.178	-1.286	.081	.396
.79	.109	-.790	.081	.400
.26	.036	-.267	.081	.406
-.24	-.032	.234	.081	.406
-.74	-.103	.747	.081	.399
-1.26	-.176	1.263	.081	.403
-1.78	-.248	1.784	.082	.401
-2.29	-.320	2.287	.083	.400
-3.29	-.461	3.287	.083	.397
-4.32	-.613	4.363	.084	.400

M = 4.00 Q = 2.340 RN = .2500

ALP	CN	CM	CAB	CAF
5.95	.794	-5.304	.054	.341
4.95	.647	-4.334	.053	.348
3.94	.504	-3.387	.053	.350
2.91	.370	-2.524	.055	.355
1.89	.239	-1.654	.057	.350
1.36	.168	-1.134	.059	.360
.86	.104	-.708	.060	.344
.33	.042	-.294	.062	.330
-.14	-.018	.121	.063	.345
-.67	-.080	.553	.064	.351
-1.17	-.144	.979	.064	.334
-1.67	-.209	1.423	.065	.330
-2.19	-.275	1.872	.065	.330
-3.17	-.398	2.682	.064	.325
-4.18	-.531	3.571	.063	.326

M = 4.50 Q = 2.450 RN = .3200

ALP	CN	CM	CAB	CAF
5.88	.762	-5.019	.050	.345
4.88	.613	-4.064	.050	.355
3.87	.477	-3.192	.050	.342
2.84	.346	-2.326	.050	.330
1.83	.224	-1.517	.051	.342
1.30	.154	-1.092	.051	.335
.78	.091	-.619	.051	.326
.28	.033	-.224	.052	.334
-.21	-.025	.168	.052	.320
-.73	-.086	.590	.052	.324
-1.24	-.145	.983	.052	.330
-1.74	-.208	1.399	.052	.330
-2.26	-.274	1.841	.052	.323
-3.24	-.394	2.623	.052	.329
-4.25	-.516	3.417	.051	.323

Table 17. Aerodynamic Coefficients for Configuration B1T4X4

M = .80 Q = 5.700 RN = .3810

ALP	CN	CM	CAB	CAF
-4.27	-.675	5.528	.390	.582
-3.20	-.481	3.982	.343	.586
-2.13	-.286	2.372	.332	.600
-1.06	-.112	.051	.301	.610
.01	.073	-.696	.300	.621
1.09	.258	-2.219	.317	.619
2.17	.444	-3.750	.347	.614
3.23	.633	-5.310	.387	.615
4.31	.836	-6.990	.423	.607
6.47	1.294	-10.805	.501	.609
.01	.071	-.671	.300	.626

M = .90 Q = 6.520 RN = .4010

ALP	CN	CM	CAB	CAF
-4.31	-.686	7.020	.343	.581
-3.22	-.607	5.268	.332	.565
-2.14	-.356	3.053	.287	.566
-1.06	-.105	.018	.246	.584
.02	.124	-1.225	.244	.602
1.11	.345	-3.129	.272	.602
2.18	.579	-5.206	.321	.598
3.27	.790	-6.987	.355	.605
4.36	1.055	-9.315	.392	.612
6.54	1.579	-13.941	.457	.628
.02	.109	-1.061	.244	.610

M = .95 Q = 6.750 RN = .4090

ALP	CN	CM	CAB	CAF
-4.33	-.674	5.514	.387	.661
-3.23	-.460	3.706	.356	.657
-2.14	-.270	2.136	.322	.669
-1.07	-.119	.929	.288	.681
.02	.040	-.331	.278	.695
1.10	.194	-1.548	.294	.691
2.19	.365	-2.914	.332	.682
3.28	.569	-4.622	.375	.694
4.38	.784	-6.444	.411	.714
6.56	1.253	-10.490	.472	.713
-4.32	-.673	5.513	.387	.667

M = 1.00 Q = 7.090 RN = .4190

ALP	CN	CM	CAB	CAF
-4.33	-.672	5.536	.533	.791
-3.24	-.460	3.707	.462	.766
-2.15	-.282	2.250	.412	.768
-1.06	-.112	.899	.374	.793
.02	.051	-.454	.362	.804
1.11	.226	-1.859	.377	.813
2.20	.397	-3.232	.422	.821
3.29	.586	-4.837	.484	.837
4.38	.809	-6.741	.524	.860
6.58	1.272	-10.712	.594	.839
-4.34	-.686	5.645	.525	.785

M = 1.05 Q = 7.460 RN = .4220

ALP	CN	CM	CAB	CAF
-4.39	-.763	6.493	.581	.906
-3.29	-.544	4.620	.575	.912
-2.16	-.333	2.819	.621	.932
-1.07	-.130	1.000	.674	.932
.03	.075	-.662	.688	.939
1.12	.272	-2.343	.673	.948
2.21	.474	-4.075	.634	.942
3.30	.684	-5.870	.685	.934
4.41	.907	-7.783	.593	.924
6.61	1.270	-10.661	.614	.900
-4.34	-.795	6.440	.579	.908

M = 1.10 Q = 7.700 RN = .4230

ALP	CN	CM	CAB	CAF
-4.37	-.769	6.515	.544	.902
-3.27	-.549	4.633	.568	.906
-2.16	-.340	2.803	.592	.902
-1.07	-.140	1.183	.603	.907
.03	.057	-.488	.608	.914
1.12	.260	-2.221	.590	.918
2.22	.466	-3.966	.586	.926
3.32	.678	-5.768	.566	.921
4.42	.882	-7.518	.560	.917
6.64	1.336	-11.363	.561	.897
-4.37	-.759	6.443	.536	.905

M = 1.20 Q = 8.190 RN = .4320

ALP	CN	CM	CAB	CAF
-4.39	-.795	6.791	.440	.837
-3.29	-.589	5.037	.441	.834
-2.18	-.372	3.203	.439	.833
-1.07	-.160	1.412	.430	.835
.03	.039	-.294	.430	.838
1.14	.256	-2.129	.434	.847
2.25	.468	-3.928	.440	.853
3.36	.692	-5.825	.443	.849
4.47	.915	-7.722	.443	.846
6.71	1.365	-11.491	.455	.831
.03	.040	-.298	.430	.848

M = 1.30 Q = 8.400 RN = .4160

ALP	CN	CM	CAB	CAF
-4.41	-.818	7.084	.360	.729
-3.29	-.593	5.163	.354	.737
-2.18	-.370	3.244	.350	.744
-1.07	-.148	1.327	.348	.748
.05	.072	-.569	.345	.750
1.16	.285	-2.408	.346	.744
2.27	.509	-4.332	.351	.745
3.39	.736	-6.280	.355	.745
4.52	.972	-8.305	.357	.743
6.78	1.449	-12.318	.371	.735
.05	.059	-.442	.346	.741

M = 1.50 Q = 8.500 RN = .3860

ALP	CN	CM	CAB	CAF
-4.43	-.789	6.712	.264	.613
-3.31	-.570	4.896	.262	.618
-2.19	-.355	3.037	.258	.621
-1.07	-.147	1.291	.253	.622
.04	.062	-.502	.254	.624
1.16	.269	-2.254	.255	.631
2.28	.485	-4.070	.257	.637
3.44	.699	-5.861	.260	.639
4.53	.922	-7.733	.263	.641
6.81	1.385	-11.561	.271	.644
.04	.050	-.385	.254	.632

M = 1.75 Q = 6.200 RN = .3500

ALP	CN	CM	CAB	CAF
8.99	1.567	-12.664	.218	.541
7.85	1.367	-10.973	.216	.537
6.74	1.135	-8.294	.212	.531
5.62	.935	-7.669	.207	.526
4.53	.742	-6.118	.202	.526
3.45	.556	-4.591	.201	.521
2.35	.377	-3.116	.199	.513
1.78	.284	-2.343	.195	.515
1.24	.195	-1.618	.194	.516
.70	.112	-.928	.194	.512
.15	.028	-.235	.194	.511
-.39	-.063	.522	.195	.508
-.93	-.149	1.248	.195	.505
-1.46	-.240	1.984	.195	.502
-2.00	-.329	2.722	.196	.504
-3.10	-.916	4.249	.198	.501
-4.21	-.703	5.795	.202	.501

M = 2.50 Q = 4.930 RN = .3100

ALP	CN	CM	CAB	CAF
8.76	1.367	-10.146	.128	.448
7.64	1.165	-8.749	.128	.452
6.53	.974	-7.380	.126	.440
5.45	.790	-6.086	.125	.437
4.36	.627	-4.808	.123	.431
3.28	.465	-3.541	.120	.429
2.22	.310	-2.392	.118	.427
1.65	.227	-1.762	.116	.429
1.11	.152	-1.180	.116	.428
.59	.076	-.593	.115	.424
.07	.013	-.103	.115	.425
-.49	-.067	.516	.116	.419
-1.01	-.138	1.073	.115	.425
-1.55	-.216	1.671	.115	.418
-2.09	-.290	2.235	.116	.422
-3.12	-.444	3.418	.116	.421
-4.19	-.604	4.637	.117	.419

M = 3.00 Q = 4.130 RN = .3100

ALP	CN	CM	CAB	CAF
8.59	1.285	-9.101	.109	.410
7.51	1.090	-7.817	.109	.416
6.42	.906	-6.556	.108	.468
5.33	.735	-5.354	.107	.400
4.26	.574	-4.199	.106	.405
3.20	.422	-3.098	.104	.397
2.13	.278	-2.037	.103	.396
1.07	.132	-.983	.102	.396
.53	.070	-.521	.101	.393
-.08	.003	-.029	.102	.389
-.53	-.073	.538	.102	.390
-1.07	-.134	.999	.101	.393
-1.59	-.210	1.563	.101	.388
-2.12	-.287	2.121	.101	.394
-3.16	-.425	3.138	.101	.391
-4.21	-.570	4.192	.101	.383

Table 18. Aerodynamic Coefficients for Configuration B2T4X1

M = .80 Q = 5.700 RN = .3810

ALP	CN	CM	CAB	CAF
-4.40	-.737	5.307	.075	.807
-3.28	-.506	3.671	.073	.819
-2.17	-.303	2.163	.070	.821
-1.07	-.116	.836	.069	.822
.03	.061	-.440	.069	.824
1.13	.235	-1.694	.069	.819
2.24	.448	-3.265	.071	.821
3.36	.671	-4.934	.072	.819
4.47	.890	-6.558	.077	.816
6.69	1.281	-9.363	.097	.805
.03	.053	-.377	.068	.819

M = .90 Q = 6.520 RN = .4010

ALP	CN	CM	CAB	CAF
-4.45	-.760	5.666	.052	.782
-3.32	-.553	4.149	.048	.776
-2.20	-.361	2.663	.043	.773
-1.08	-.139	1.058	.041	.784
.04	.073	-.504	.040	.778
1.17	.305	-2.332	.041	.774
2.29	.479	-3.548	.046	.786
3.41	.679	-5.030	.051	.798
4.55	.947	-7.111	.061	.812
6.85	1.505	-11.447	.093	.821
1.17	.303	-2.310	.041	.776

M = .95 Q = 6.750 RN = .4090

ALP	CN	CM	CAB	CAF
-4.51	-.916	7.134	.150	.906
-3.37	-.660	5.141	.147	.914
-2.22	-.391	3.031	.148	.913
-1.09	-.155	1.204	.151	.911
.03	.051	-.375	.148	.919
1.16	.270	-2.038	.142	.926
2.30	.507	-3.839	.145	.936
3.44	.751	-5.726	.150	.927
4.56	.874	-6.413	.137	.909
6.83	1.333	-9.902	.137	.898
6.54	.834	-6.102	.136	.908
.03	.050	-.362	.148	.923

M = 1.00 Q = 7.090 RN = .4190

ALP	CN	CM	CAB	CAF
-4.56	-.997	7.892	.190	.879
-3.39	-.604	5.371	.174	.890
-2.23	-.302	2.925	.181	.878
-1.09	-.156	1.148	.169	.885
.03	.051	-.304	.165	.893
1.17	.275	-2.093	.164	.895
2.32	.516	-3.946	.169	.901
3.48	.809	-6.291	.187	.900
4.65	1.116	-8.740	.209	.898
6.97	1.682	-13.185	.220	.885
2.32	.516	-3.942	.169	.910

M = 1.05 Q = 7.440 RN = .4220

ALP	CN	CM	CAB	CAF
-4.57	-.980	7.749	.195	.889
-3.41	-.695	5.475	.183	.894
-2.29	-.417	3.253	.175	.895
-1.10	-.152	1.142	.175	.889
.03	.051	-.405	.176	.897
1.17	.258	-1.950	.170	.899
2.33	.515	-3.942	.183	.902
3.49	.822	-6.456	.190	.916
4.65	1.080	-8.440	.211	.907
6.97	1.588	-12.337	.233	.901
1.17	.257	-1.944	.170	.899

M = 1.10 Q = 7.700 RN = .4230

ALP	CN	CM	CAB	CAF
-4.59	-.937	7.308	.186	.857
-3.42	-.671	5.228	.163	.873
-2.26	-.417	3.247	.158	.880
-1.10	-.160	1.235	.151	.885
.03	.041	-.316	.152	.884
1.18	.268	-2.040	.150	.884
2.34	.524	-4.022	.155	.885
3.49	.766	-5.991	.164	.878
4.66	1.016	-7.816	.189	.871
6.99	1.494	-11.396	.216	.862
4.66	1.017	-7.821	.188	.882
-1.11	-.176	1.356	.152	.880

M = 1.30 Q = 8.400 RN = .4160

ALP	CN	CM	CAB	CAF
-4.69	-.933	7.093	.140	.652
-3.50	-.672	5.110	.134	.675
-2.31	-.410	3.113	.137	.689
-1.13	-.160	1.279	.138	.697
.05	.066	-.403	.140	.701
1.24	.307	-2.291	.139	.693
2.42	.595	-4.170	.142	.694
3.61	.801	-6.024	.143	.688
4.80	1.051	-7.877	.144	.673
7.20	1.523	-11.288	.152	.658
.06	.069	-.406	.139	.706

M = 1.50 Q = 8.560 RN = .3860

ALP	CN	CM	CAB	CAF
-4.67	-.813	5.930	.140	.578
-3.49	-.597	4.366	.136	.585
-2.31	-.385	2.838	.135	.590
-1.14	-.174	1.289	.134	.599
.09	.038	-.200	.134	.603
1.21	.257	-1.870	.135	.604
2.39	.470	-3.413	.136	.603
3.57	.680	-4.924	.138	.603
4.76	.911	-6.592	.140	.604
7.17	1.408	-10.208	.146	.600
.04	.042	-.297	.134	.612

M = 1.75 Q = 6.200 RN = .3600

ALP	CN	CM	CAB	CAF
6.21	.908	-6.832	.126	.525
5.18	.813	-5.634	.120	.527
4.12	.630	-4.429	.116	.530
3.08	.472	-3.275	.116	.532
2.02	.308	-2.144	.117	.531
1.46	.221	-1.591	.117	.527
.96	.143	-.995	.117	.533
.41	.083	-.443	.117	.528
-.09	-.013	.092	.117	.528
-.62	-.095	.656	.117	.527
-1.15	-.176	1.210	.118	.532
-1.67	-.255	1.767	.118	.530
-2.19	-.333	2.308	.119	.527
-3.21	-.491	3.393	.119	.533
-4.27	-.657	4.542	.118	.532

M = 2.00 Q = 5.850 RN = .3400

ALP	CN	CM	CAB	CAF
6.15	.908	-6.053	.128	.487
5.12	.743	-4.948	.124	.488
4.07	.580	-3.880	.118	.490
3.02	.425	-2.845	.116	.497
1.97	.277	-1.836	.117	.489
1.42	.198	-1.334	.118	.493
.90	.126	-.844	.119	.488
.36	.052	-.352	.120	.494
-.11	-.017	.117	.120	.488
-.66	-.091	.611	.120	.493
-1.19	-.166	1.115	.120	.494
-1.70	-.239	1.603	.119	.493
-2.23	-.315	2.106	.119	.496
-3.25	-.460	3.063	.118	.498
-4.30	-.617	4.109	.118	.490

M = 2.50 Q = 4.930 RN = .3200

ALP	CN	CM	CAB	CAF
6.10	.860	-5.516	.098	.417
5.08	.701	-4.499	.097	.409
4.03	.550	-3.529	.097	.423
2.99	.403	-2.583	.098	.420
1.96	.260	-1.670	.100	.418
1.40	.184	-1.184	.101	.424
.89	.116	-.751	.102	.418
.36	.048	-.300	.103	.418
-.14	-.019	.125	.103	.420
-.68	-.089	.574	.103	.406
-1.20	-.159	1.030	.103	.418
-1.71	-.227	1.457	.103	.424
-2.22	-.295	1.902	.102	.419
-3.24	-.431	2.767	.102	.417
-4.27	-.579	3.711	.101	.418

M = 3.00 Q = 4.130 RN = .3100

ALP	CN	CM	CAB	CAF
6.01	.822	-5.163	.074	.397
4.99	.668	-4.212	.073	.380
3.96	.527	-3.325	.071	.384
2.92	.383	-2.436	.069	.380
1.89	.244	-1.556	.067	.375
1.35	.177	-1.125	.067	.381
.84	.107	-.677	.066	.380
.30	.038	-.254	.066	.380
-.19	-.026	.169	.066	.387
-.72	-.092	.588	.066	.381
-1.24	-.160	1.021	.066	.378
-1.76	-.229	1.452	.066	.379
-2.26	-.295	1.866	.066	.375
-3.27	-.425	2.684	.067	.383
-4.29	-.564	3.564	.069	.377

M = 4.00 Q = 2.340 RN = .2500

ALP	CN	CM	CAB	CAF
5.91	.767	-4.694	.035	.350
4.90	.619	-3.783	.034	.349
3.88	.482	-2.947	.034	.344
2.86	.348	-2.138	.033	.351
1.84	.222	-1.365	.033	.333
1.30	.155	-.951	.033	.338
.81	.096	-.597	.033	.330
.30	.036	-.233	.033	.327
-.21	-.026	.163	.033	.320
-.71	-.085	.527	.033	.334
-1.23	-.146	.900	.033	.331
-1.73	-.203	1.245	.033	.336
-2.24	-.267	1.636	.033	.339
-3.24	-.390	2.381	.033	.332
-4.26	-.522	3.181	.033	.331

M = 4.50 Q = 2.450 RN = .3200

ALP	CN	CM	CAB	CAF
6.00	.753	-4.570	.022	.334
5.01	.613	-3.719	.022	.353
4.00	.478	-2.902	.022	.332
2.97	.348	-2.112	.022	.343
1.96	.225	-1.369	.022	.337
1.41	.159	-.970	.022	.333
.92	.106	-.648	.022	.341
.39	.044	-.275	.022	.323
-.10	-.013	.000	.022	.316
-.62	-.074	.464	.022	.327
-1.11	-.122	.745	.022	.331
-1.63	-.187	1.131	.021	.333
-2.13	-.247	1.496	.021	.346
-3.13	-.370	2.243	.021	.345
-4.15	-.494	2.980	.021	.331

Table 19. Aerodynamic Coefficients for Configuration B2T4X2

M = .80 Q = 5.700 RN = .3810

ALP	CN	CM	CAB	CAF
-4.33	-.650	6.098	.149	.853
-3.24	-.457	3.407	.145	.861
-2.15	-.265	1.924	.142	.867
-1.05	-.072	.433	.141	.875
.03	.103	-.927	.140	.875
1.12	.304	-2.492	.142	.880
2.22	.500	-4.003	.145	.878
3.31	.698	-5.537	.147	.874
4.41	.901	-7.103	.152	.868
6.61	1.305	-10.185	.167	.853

M = .90 Q = 6.520 RN = .4010

ALP	CN	CM	CAB	CAF
-4.38	-.715	5.574	.119	.782
-3.27	-.490	3.775	.116	.793
-2.16	-.266	2.189	.113	.798
-1.06	-.104	.763	.109	.801
.03	.065	-.543	.107	.803
1.13	.258	-2.034	.107	.809
2.24	.458	-3.593	.108	.811
3.35	.649	-5.255	.112	.808
4.47	.955	-7.633	.127	.813
6.74	1.509	-12.966	.207	.811
4.47	.953	-7.623	.124	.825

M = .95 Q = 6.750 RN = .4090

ALP	CN	CM	CAB	CAF
-4.39	-.650	4.947	.166	.887
-3.27	-.469	3.587	.160	.869
-2.18	-.313	2.428	.150	.862
-1.07	-.124	.958	.147	.856
.03	.062	-.529	.145	.864
1.13	.213	-1.627	.156	.901
2.25	.431	-3.330	.158	.889
3.35	.635	-4.949	.157	.901
4.48	.857	-6.696	.160	.898
6.73	1.335	-10.521	.223	.880
1.13	.238	-1.862	.157	.887

M = 1.00 Q = 7.090 RN = .4190

ALP	CN	CM	CAB	CAF
-4.43	-.782	6.233	.213	.940
-4.43	-.781	6.220	.213	.939
-3.31	-.551	4.369	.209	.951
-2.19	-.327	2.567	.206	.955
-1.07	-.112	.862	.204	.959
.03	.059	-.490	.199	.961
1.14	.261	-2.085	.202	.960
2.26	.480	-3.832	.201	.961
3.39	.705	-5.622	.202	.958
4.51	.894	-7.058	.204	.948
6.75	1.308	-10.257	.230	.914

M = 1.05 Q = 7.460 RN = .4220

ALP	CN	CM	CAB	CAF
-4.45	-.787	6.267	.216	.933
-3.32	-.583	4.476	.204	.945
-2.20	-.344	2.736	.204	.945
-1.08	-.135	1.062	.205	.946
.03	.044	-.347	.204	.950
1.14	.242	-1.917	.205	.954
2.27	.442	-3.680	.207	.957
3.39	.693	-5.535	.210	.960
4.53	.929	-7.422	.216	.955
6.80	1.390	-11.067	.239	.941
-1.08	-.136	1.064	.204	.946

M = 1.10 Q = 7.700 RN = .4230

ALP	CN	CM	CAB	CAF
-4.48	-.807	6.434	.207	.888
-3.34	-.581	4.636	.203	.899
-2.21	-.357	2.838	.204	.907
-1.08	-.142	1.134	.205	.908
.02	.036	-.278	.205	.910
1.14	.233	-1.821	.207	.914
2.28	.440	-3.639	.209	.915
3.42	.698	-5.543	.212	.912
4.55	.926	-7.351	.216	.907
6.83	1.375	-10.871	.239	.887
-2.21	-.358	2.851	.204	.901
.03	.037	-.278	.205	.909

M = 1.30 Q = 8.400 RN = .4160

ALP	CN	CM	CAB	CAF
-4.57	-.864	6.890	.167	.694
-3.41	-.613	4.876	.163	.709
-2.25	-.373	2.978	.162	.723
-1.10	-.150	1.210	.162	.731
.05	.067	-.519	.163	.737
1.21	.294	-2.297	.164	.735
2.36	.522	-4.106	.165	.731
3.51	.764	-6.048	.168	.721
4.69	1.021	-8.083	.175	.710
7.04	1.529	-12.052	.185	.692
-2.24	-.374	2.992	.162	.720

M = 1.50 Q = 8.560 RN = .3860

ALP	CN	CM	CAB	CAF
-4.57	-.762	5.812	.166	.578
-3.41	-.547	4.154	.161	.585
-2.26	-.342	2.594	.159	.591
-1.11	-.147	1.115	.143	.604
.04	.044	-.330	.142	.610
1.18	.237	-1.775	.144	.615
2.34	.443	-3.339	.147	.621
3.49	.651	-4.928	.153	.620
4.66	.871	-6.608	.164	.619
7.02	1.361	-10.356	.181	.612
.03	.042	-.307	.142	.626

M = 1.75 Q = 6.200 RN = .3600

ALP	CN	CM	CAB	CAF
6.09	.995	-7.319	.156	.534
5.07	.819	-6.051	.153	.535
4.02	.639	-4.730	.153	.542
2.97	.449	-3.483	.160	.543
1.93	.303	-2.263	.166	.549
1.39	.216	-1.594	.166	.539
.84	.130	-.965	.165	.545
.33	.051	-.379	.166	.543
-.18	-.027	.209	.166	.553
-.70	-.108	.803	.167	.540
-1.22	-.190	1.406	.167	.544
-1.74	-.273	2.014	.168	.543
-2.25	-.353	2.611	.168	.542
-3.29	-.518	3.816	.168	.542
-4.32	-.689	5.078	.164	.537

M = 2.00 Q = 5.850 RN = .3400

ALP	CN	CM	CAB	CAF
6.03	.963	-6.979	.124	.497
5.00	.789	-5.746	.120	.494
3.97	.616	-4.499	.118	.492
2.91	.449	-3.300	.117	.493
1.87	.289	-2.129	.118	.496
1.34	.205	-1.503	.117	.485
.82	.125	-.919	.117	.498
.28	.044	-.325	.118	.499
-.22	-.034	.253	.118	.499
-.76	-.117	.854	.120	.499
-1.26	-.192	1.414	.120	.498
-1.78	-.274	2.001	.120	.494
-2.32	-.357	2.600	.121	.498
-3.33	-.510	3.705	.124	.493
-4.37	-.676	4.904	.127	.496

M = 2.50 Q = 4.930 RN = .3200

ALP	CN	CM	CAB	CAF
6.05	.930	-6.515	.083	.415
5.01	.758	-5.354	.081	.422
3.97	.595	-4.224	.077	.425
2.92	.435	-3.103	.075	.430
1.89	.281	-2.018	.073	.436
1.35	.199	-1.420	.071	.429
.83	.122	-.876	.069	.431
.30	.045	-.323	.069	.429
-.19	-.029	.206	.069	.429
-.73	-.107	.772	.070	.437
-1.24	-.183	1.310	.071	.420
-1.77	-.262	1.865	.072	.431
-2.27	-.336	2.389	.074	.429
-3.28	-.484	3.422	.077	.426
-4.32	-.645	4.542	.079	.424

M = 3.00 Q = 4.130 RN = .3100

ALP	CN	CM	CAB	CAF
5.93	.854	-5.740	.057	.389
4.90	.694	-4.705	.056	.397
3.88	.543	-3.686	.055	.388
2.84	.389	-2.653	.053	.388
1.82	.240	-1.698	.052	.385
1.27	.174	-1.185	.051	.391
.77	.104	-.711	.050	.391
.23	.032	-.224	.050	.385
-.25	-.033	.228	.050	.397
-.78	-.108	.738	.050	.382
-1.29	-.175	1.202	.051	.394
-1.81	-.244	1.675	.051	.384
-2.31	-.314	2.139	.052	.388
-3.32	-.454	3.080	.053	.383
-4.35	-.604	4.087	.053	.384

M = 4.00 Q = 2.340 RN = .2500

ALP	CN	CM	CAB	CAF
5.85	.774	-4.951	.034	.340
4.84	.620	-3.980	.034	.337
3.83	.477	-3.087	.034	.340
2.80	.351	-2.200	.034	.350
1.79	.215	-1.482	.034	.335
1.26	.150	-.972	.034	.337
.76	.080	-.580	.034	.327
.23	.028	-.187	.033	.332
-.27	-.032	.210	.033	.318
-.78	-.093	.607	.033	.327
-1.28	-.152	.977	.033	.332
-1.79	-.214	1.379	.033	.335
-2.30	-.282	1.817	.033	.343
-3.28	-.402	2.579	.033	.342
-4.29	-.533	3.414	.033	.341

M = 4.50 Q = 2.450 RN = .3200

ALP	CN	CM	CAB	CAF
5.81	.739	-4.640	.025	.332
4.82	.598	-3.790	.025	.341
3.79	.459	-2.906	.025	.340
2.77	.331	-2.104	.025	.337
1.76	.204	-1.307	.025	.324
1.23	.130	-.875	.025	.333
.72	.081	-.523	.026	.329
.21	.023	-.152	.026	.335
-.30	-.033	.224	.026	.316
-.31	-.091	.575	.026	.320
-1.31	-.149	.960	.026	.329
-1.81	-.205	1.318	.026	.338
-2.32	-.273	1.754	.025	.359
-3.31	-.395	2.511	.025	.337
-4.33	-.527	3.340	.025	.325

Table 20. Aerodynamic Coefficients for Configuration B2T4X3

M = .80 Q = 5.700 RN = .3810

ALP	CN	CM	CAB	CAF
-4.29	-.773	6.486	.230	.766
-3.21	-.563	4.746	.219	.774
-2.13	-.357	3.045	.215	.777
-1.05	-.152	1.356	.216	.785
.04	.091	-.319	.217	.784
1.10	.224	-1.756	.223	.779
2.19	.430	-3.445	.238	.773
3.27	.647	-5.251	.256	.758
4.36	.871	-7.111	.277	.746
6.54	1.338	-10.993	.307	.737

M = 1.05 Q = 7.460 RN = .4220

ALP	CN	CM	CAB	CAF
-4.38	-.793	6.697	.304	.841
-3.26	-.556	4.704	.285	.851
-2.16	-.336	2.830	.264	.869
-1.06	-.118	1.008	.254	.874
.04	.067	-.549	.253	.872
1.15	.280	-2.313	.263	.872
2.25	.492	-4.106	.297	.850
3.35	.714	-5.967	.324	.839
4.47	.958	-8.038	.332	.849
6.70	1.429	-11.961	.353	.852
-2.16	-.337	2.848	.266	.860

M = 1.75 Q = 6.700 RN = .3600

ALP	CN	CM	CAB	CAF
6.18	1.095	-8.686	.133	.573
5.17	.907	-7.238	.131	.571
4.13	.715	-5.722	.129	.576
3.08	.529	-4.244	.127	.576
2.04	.351	-2.820	.125	.574
1.50	.255	-2.047	.123	.576
.97	.165	-1.332	.119	.585
.45	.077	-.624	.120	.586
-.05	-.008	.069	.120	.584
-.57	-.097	.785	.121	.582
-1.06	-.182	1.466	.124	.580
-1.60	-.275	2.196	.127	.576
-2.11	-.360	2.883	.129	.570
-3.12	-.533	4.238	.131	.572
-4.16	-.717	5.702	.134	.570

M = 4.00 Q = 2.340 RN = .2500

ALP	CN	CM	CAB	CAF
5.84	.758	-5.007	.039	.366
4.84	.618	-4.098	.038	.368
3.83	.476	-3.185	.039	.369
2.81	.349	-2.338	.038	.379
1.80	.224	-1.520	.039	.358
1.26	.193	-1.029	.040	.354
.75	.088	-.593	.040	.352
.23	.027	-.186	.040	.356
-.23	-.028	.199	.040	.351
-.76	-.088	.592	.040	.351
-1.28	-.152	1.023	.040	.355
-1.78	-.214	1.435	.040	.345
-2.28	-.278	1.866	.040	.364
-3.28	-.398	2.652	.040	.361
-4.29	-.530	3.511	.040	.353

M = .90 Q = 6.520 RN = .4010

ALP	CN	CM	CAB	CAF
-4.32	-.780	6.610	.212	.723
-3.22	-.531	4.481	.200	.729
-2.13	-.324	2.772	.193	.731
-1.04	-.130	1.177	.191	.735
.04	.048	-.312	.190	.733
1.12	.250	-1.998	.195	.734
2.22	.446	-3.798	.214	.721
3.31	.689	-5.678	.228	.716
4.41	.932	-7.744	.252	.718
6.63	1.549	-13.189	.293	.711
-4.32	-.763	6.444	.212	.721

M = 1.10 Q = 7.700 RN = .4230

ALP	CN	CM	CAB	CAF
-4.40	-.827	7.037	.290	.831
-3.28	-.595	5.085	.273	.843
-2.17	-.361	3.098	.254	.858
-1.06	-.135	1.190	.245	.867
.04	.055	-.426	.244	.863
1.15	.275	-2.263	.252	.860
2.26	.504	-4.210	.282	.841
3.38	.744	-6.230	.302	.838
4.50	.983	-8.231	.308	.843
6.74	1.446	-12.084	.341	.835
.04	.056	-.428	.245	.862

M = 2.00 Q = 5.850 RN = .3400

ALP	CN	CM	CAB	CAF
6.07	1.000	-7.676	.097	.531
5.04	.814	-6.289	.095	.531
4.01	.640	-4.948	.093	.530
2.97	.469	-3.634	.092	.527
1.93	.304	-2.363	.091	.523
1.39	.215	-1.764	.090	.526
.87	.135	-1.044	.089	.525
.35	.054	-.428	.090	.530
-.17	-.026	.200	.089	.528
-.67	-.105	.817	.090	.530
-1.19	-.186	1.442	.092	.527
-1.70	-.267	2.068	.094	.527
-2.22	-.347	2.690	.095	.524
-3.24	-.508	3.916	.096	.523
-4.27	-.681	5.246	.098	.524

M = 4.50 Q = 2.450 RN = .3200

ALP	CN	CM	CAB	CAF
5.78	.736	-4.811	.030	.380
4.77	.586	-3.842	.029	.375
3.76	.456	-2.999	.029	.377
2.73	.325	-2.162	.029	.358
2.17	.256	-1.707	.029	.370
1.70	.200	-1.341	.029	.357
1.18	.137	-.920	.029	.378
.66	.072	-.487	.029	.410
.16	.017	-.119	.029	.361
-.33	-.038	.261	.029	.368
-.87	-.099	.659	.029	.363
-1.33	-.154	1.017	.029	.360
-1.87	-.219	1.450	.029	.369
-2.35	-.276	1.826	.029	.355
-2.86	-.338	2.237	.029	.355
-3.37	-.402	2.642	.029	.343
-4.36	-.525	3.432	.029	.365

M = .95 Q = 6.750 RN = .4090

ALP	CN	CM	CAB	CAF
-4.33	-.632	5.069	.238	.798
-3.23	-.415	3.273	.232	.793
-2.13	-.235	1.821	.220	.805
-1.[illegible]	-.069	.495	.219	.810
.04	.090	-.784	.220	.811
1.13	.256	-2.065	.221	.822
2.22	.426	-3.405	.236	.811
3.32	.606	-4.841	.254	.796
4.42	.807	-6.479	.269	.783
6.63	1.277	-10.389	.295	.780

M = 1.30 Q = 8.400 RN = .4160

ALP	CN	CM	CAB	CAF
-3.36	-.697	5.987	.231	.710
-2.22	-.436	3.765	.235	.724
-1.09	-.176	1.534	.250	.736
.05	.079	-.654	.255	.742
1.19	.336	-2.842	.245	.734
2.32	.593	-5.020	.238	.727
3.46	.846	-7.161	.234	.722
4.61	1.112	-9.405	.243	.715
6.92	1.642	-13.807	.267	.716
-4.50	-.954	8.163	.235	.697

M = 2.50 Q = 4.930 RN = .3200

ALP	CN	CM	CAB	CAF
6.01	.905	-6.592	.067	.451
4.99	.737	-5.401	.065	.452
3.95	.576	-4.236	.063	.456
2.92	.420	-3.100	.061	.458
1.89	.271	-2.009	.060	.455
1.35	.190	-1.399	.060	.458
.83	.117	-.865	.059	.453
.32	.046	-.343	.058	.456
-.19	-.026	.198	.059	.453
-.70	-.100	.739	.060	.456
-1.22	-.174	1.282	.061	.451
-1.74	-.248	1.821	.062	.451
-2.26	-.323	2.371	.062	.452
-3.25	-.466	3.409	.063	.455
-4.29	-.625	4.569	.065	.461

M = 1.00 Q = 7.090 RN = .4190

ALP	CN	CM	CAB	CAF
-4.35	-.700	5.773	.286	.812
-3.24	-.477	3.900	.272	.829
-2.14	-.261	2.112	.257	.843
-1.04	-.061	.446	.250	.853
.04	.109	-.957	.251	.853
1.14	.295	-2.462	.255	.858
2.24	.465	-3.798	.271	.847
3.34	.652	-5.299	.290	.829
4.45	.875	-7.154	.309	.820
6.67	1.354	-11.168	.336	.812
-4.35	-.693	5.704	.282	.815

M = 1.50 Q = 8.560 RN = .3860

ALP	CN	CM	CAB	CAF
-4.50	-.854	7.119	.214	.619
-3.36	-.625	5.227	.214	.629
-2.23	-.398	3.341	.225	.634
-1.10	-.181	1.530	.228	.641
.03	.041	-.313	.230	.645
1.16	.260	-2.130	.231	.654
2.30	.495	-4.102	.232	.655
3.43	.724	-5.999	.228	.654
4.58	.958	-7.905	.226	.653
6.89	1.440	-11.786	.230	.650
.03	.035	-.263	.230	.653

M = 3.00 Q = 4.130 RN = .3100

ALP	CN	CM	CAB	CAF
5.89	.827	-5.699	.059	.409
4.88	.667	-4.631	.057	.410
3.85	.520	-3.609	.055	.413
2.81	.371	-2.590	.053	.409
1.78	.235	-1.644	.052	.406
1.24	.162	-1.138	.051	.405
.74	.096	-.674	.051	.409
.22	.031	-.231	.050	.420
-.27	-.037	.265	.050	.404
-.79	-.103	.729	.050	.408
-1.32	-.172	1.212	.051	.403
-1.82	-.237	1.657	.051	.401
-2.33	-.305	2.135	.052	.401
-3.34	-.438	3.044	.052	.408
-4.36	-.583	4.047	.053	.402

Table 21. Aerodynamic Coefficients for Configuration B1T5X1

M = .80 Q = 5.700 RN = .3810

ALP	CN	CM	CAB	CAF
-4.31	-.543	3.885	.140	.489
-3.22	-.367	2.569	.144	.501
-2.13	-.199	1.328	.143	.504
-1.04	-.050	.200	.141	.506
.05	.112	-.925	.142	.505
1.13	.269	-2.061	.141	.502
2.22	.430	-3.225	.143	.498
3.32	.603	-4.515	.144	.497
4.42	.784	-5.876	.147	.495
6.61	1.142	-8.480	.164	.477
.04	.104	-.071	.142	.508

M = .90 Q = 6.520 RN = .4010

ALP	CN	CM	CAB	CAF
-4.36	-.535	3.787	.122	.550
-3.26	-.377	2.647	.111	.568
-2.15	-.217	1.495	.104	.578
-1.05	-.060	.359	.103	.582
.05	.086	-.681	.102	.586
1.15	.241	-1.790	.104	.582
2.24	.388	-2.831	.105	.576
3.35	.553	-4.023	.109	.570
4.46	.721	-5.243	.119	.568
6.69	1.098	-8.039	.152	.546
3.35	.543	-3.938	.116	.575

M = .95 Q = 6.750 RN = .4090

ALP	CN	CM	CAB	CAF
-4.40	-.645	4.859	.163	.540
-3.29	-.465	3.503	.154	.551
-2.18	-.288	2.177	.148	.558
-1.07	-.107	.810	.146	.561
.04	.004	-.677	.150	.560
1.16	.276	-2.147	.150	.570
2.27	.455	-3.501	.157	.573
3.38	.641	-4.900	.165	.572
4.50	.847	-6.480	.184	.566
6.75	1.258	-9.595	.239	.540
6.76	1.261	-9.621	.240	.541
.04	.079	-.635	.149	.573

M = 1.00 Q = 7.090 RN = .4190

ALP	CN	CM	CAB	CAF
-4.41	-.605	4.485	.219	.509
-3.29	-.426	3.133	.208	.522
-2.18	-.255	1.863	.198	.534
-1.06	-.086	.608	.179	.548
.05	.075	-.578	.179	.546
1.16	.236	-1.763	.192	.544
2.27	.404	-3.006	.202	.543
3.39	.583	-4.344	.214	.539
4.51	.768	-5.735	.233	.534
6.77	1.165	-8.712	.263	.519
.04	.065	-.500	.182	.554

M = 1.05 Q = 7.440 RN = .4220

ALP	CN	CM	CAB	CAF
-4.41	-.542	3.857	.245	.536
-3.29	-.379	2.665	.233	.545
-2.18	-.223	1.541	.204	.550
-1.07	-.082	.550	.200	.544
.04	.055	-.402	.199	.560
1.15	.195	-1.373	.202	.565
2.26	.347	-2.460	.222	.557
3.38	.507	-3.620	.236	.540
4.50	.676	-4.853	.248	.538
6.76	1.042	-7.540	.277	.553
.04	.049	-.350	.190	.575

M = 1.10 Q = 7.780 RN = .4230

ALP	CN	CM	CAB	CAF
-4.43	-.535	3.762	.224	.531
-3.31	-.374	2.601	.211	.545
-2.19	-.224	1.541	.199	.556
-1.07	-.087	.599	.188	.556
.04	.049	-.333	.193	.560
1.16	.186	-1.273	.202	.554
2.27	.327	-2.252	.209	.541
3.39	.485	-3.301	.220	.545
4.52	.652	-4.501	.228	.542
6.79	1.001	-7.089	.262	.538

M = 1.30 Q = 8.400 RN = .4160

ALP	CN	CM	CAB	CAF
-4.49	-.550	3.863	.210	.454
-3.34	-.385	2.698	.211	.459
-2.20	-.231	1.517	.206	.467
-1.07	-.077	.541	.199	.481
.07	.080	-.572	.198	.483
1.20	.236	-1.676	.199	.479
2.34	.392	-2.762	.205	.474
3.48	.550	-3.872	.208	.466
4.63	.721	-5.072	.209	.461
6.93	1.053	-7.335	.224	.452
.07	.080	-.572	.198	.488

M = 1.50 Q = 8.560 RN = .3860

ALP	CN	CM	CAB	CAF
-4.49	-.502	3.335	.205	.425
-3.35	-.355	2.357	.203	.433
-2.21	-.211	1.399	.204	.443
-1.08	-.075	.495	.204	.448
.06	.059	-.400	.206	.448
1.19	.198	-1.320	.206	.450
2.33	.337	-2.244	.205	.449
3.47	.484	-3.223	.205	.446
4.62	.643	-4.298	.206	.448
6.95	.992	-6.647	.224	.443
.05	.055	-.376	.204	.453

M = 1.75 Q = 6.200 RN = .3600

ALP	CN	CM	CAB	CAF
6.06	.607	-4.382	.180	.401
5.04	.569	-3.581	.179	.401
4.01	.446	-2.812	.175	.409
2.95	.324	-2.043	.175	.409
1.92	.210	-1.327	.176	.412
1.36	.147	-.929	.176	.414
.85	.091	-.574	.177	.414
.32	.035	-.223	.178	.413
-.19	-.020	.130	.179	.410
-.72	-.078	.481	.179	.415
-1.23	-.135	.853	.178	.413
-1.77	-.194	1.223	.177	.417
-2.27	-.249	1.573	.176	.411
-3.30	-.363	2.204	.175	.410
-4.33	-.486	3.041	.174	.409

M = 2.00 Q = 5.850 RN = .3460

ALP	CN	CM	CAB	CAF
6.01	.672	-4.087	.184	.386
5.00	.544	-3.312	.179	.388
3.95	.421	-2.557	.172	.386
2.90	.300	-1.871	.169	.397
1.86	.197	-1.195	.165	.402
1.31	.137	-.832	.163	.392
.81	.083	-.508	.162	.391
.27	.027	-.166	.162	.389
-.25	-.026	.160	.163	.389
-.77	-.079	.484	.164	.390
-1.28	-.134	.815	.166	.389
-1.80	-.189	1.155	.169	.388
-2.32	-.244	1.486	.170	.387
-3.33	-.351	2.131	.167	.391
-4.37	-.470	2.860	.169	.397

M = 2.50 Q = 4.930 RN = .3200

ALP	CN	CM	CAB	CAF
6.02	.683	-4.096	.136	.346
4.99	.557	-3.350	.135	.353
3.95	.435	-2.626	.134	.358
2.90	.316	-1.919	.139	.357
1.87	.203	-1.230	.144	.354
1.33	.141	-.856	.148	.348
.80	.086	-.526	.149	.353
.29	.032	-.198	.149	.358
-.22	-.023	.140	.150	.359
-.75	-.081	.492	.150	.355
-1.25	-.136	.830	.150	.355
-1.78	-.193	1.175	.150	.354
-2.29	-.249	1.517	.149	.349
-3.29	-.359	2.182	.147	.355
-4.33	-.474	2.853	.143	.357

M = 3.00 Q = 4.130 RN = .3100

ALP	CN	CM	CAB	CAF
5.84	.662	-3.860	.099	.329
4.82	.532	-3.095	.100	.320
3.79	.409	-2.386	.099	.317
2.75	.292	-1.705	.099	.323
1.72	.180	-1.043	.099	.319
1.18	.122	-.715	.099	.318
.68	.070	-.409	.099	.322
.15	.014	-.092	.099	.318
-.35	-.036	.207	.099	.323
-.87	-.091	.529	.099	.313
-1.39	-.144	.840	.099	.316
-1.91	-.198	1.148	.099	.326
-2.42	-.253	1.466	.099	.321
-3.41	-.358	2.076	.100	.324
-4.45	-.475	2.763	.100	.325

M = 4.00 Q = 2.340 RN = .2500

ALP	CN	CM	CAB	CAF
5.73	.634	-3.636	.055	.289
4.72	.502	-2.861	.054	.276
3.71	.384	-2.186	.055	.261
2.70	.276	-1.550	.055	.293
1.67	.167	-.944	.055	.298
1.12	.111	-.620	.055	.276
.64	.063	-.357	.055	.266
.13	.014	-.096	.055	.265
-.38	-.038	.221	.055	.265
-.90	-.090	.515	.055	.257
-1.39	-.137	.781	.055	.261
-1.88	-.189	1.070	.055	.266
-2.40	-.241	1.363	.055	.275
-3.40	-.343	1.927	.054	.276
-4.41	-.454	2.578	.054	.278

M = 4.50 Q = 2.450 RN = .3200

ALP	CN	CM	CAB	CAF
5.82	.632	-3.607	.044	.284
4.83	.505	-2.872	.044	.296
3.81	.389	-2.201	.043	.307
2.79	.280	-1.543	.043	.288
1.77	.173	-.980	.043	.292
1.23	.120	-.691	.043	.278
.74	.072	-.419	.043	.275
.22	.022	-.134	.043	.270
-.27	-.027	.150	.043	.267
-.80	-.078	.463	.043	.271
-1.30	-.127	.716	.043	.271
-1.81	-.178	.996	.043	.275
-2.32	-.227	1.276	.043	.279
-3.31	-.330	1.855	.042	.290
-4.32	-.439	2.453	.042	.280

Table 22. Aerodynamic Coefficients for Configuration B1T5X2

M = .80 Q = 5.700 RN = .3810

ALP	CN	CM	CAB	CAF
-4.29	-.569	4.252	.205	.498
-3.20	-.375	2.720	.203	.498
-2.13	-.197	1.321	.197	.504
-1.06	-.017	-.039	.193	.506
.03	.125	-1.152	.192	.506
1.11	.295	-2.470	.191	.513
2.19	.468	-3.812	.195	.511
3.28	.653	-5.257	.197	.508
4.36	.829	-6.637	.202	.502
6.53	1.196	-9.497	.222	.484
.03	.132	-1.209	.192	.506

M = .90 Q = 6.520 RN = .4010

ALP	CN	CM	CAB	CAF
-4.33	-.576	4.358	.243	.528
-3.24	-.417	3.128	.228	.535
-2.15	-.242	1.782	.210	.540
-1.06	-.076	.478	.196	.557
.03	.097	-.866	.194	.558
1.12	.267	-2.190	.199	.557
2.21	.416	-3.315	.209	.552
3.21	.423	-3.364	.209	.550
3.30	.573	-4.501	.219	.542
4.40	.751	-5.854	.233	.528
6.60	1.138	-8.914	.263	.499
-4.33	-.580	4.379	.241	.522

M = .95 Q = 6.750 RN = .4090

ALP	CN	CM	CAB	CAF
-4.35	-.618	4.772	.257	.539
-3.26	-.439	3.353	.240	.551
-2.15	-.250	1.883	.227	.557
-1.06	-.085	.509	.217	.564
.03	.083	-.738	.213	.570
1.13	.262	-2.129	.221	.576
2.23	.444	-3.527	.220	.587
3.32	.620	-4.952	.239	.566
4.42	.804	-6.405	.251	.553
6.64	1.183	-9.335	.282	.526
-4.35	-.615	4.733	.257	.541

M = 1.00 Q = 7.090 RN = .4190

ALP	CN	CM	CAB	CAF
-4.37	-.606	4.652	.275	.538
-3.26	-.416	3.160	.269	.544
-2.16	-.244	1.817	.258	.551
-1.06	-.082	.565	.256	.555
.04	.082	-.694	.253	.561
1.13	.244	-1.951	.257	.559
2.23	.415	-3.206	.262	.563
3.33	.590	-4.738	.268	.552
4.45	.790	-6.232	.284	.549
6.67	1.168	-9.171	.313	.527
-4.37	-.606	4.649	.276	.539

M = 1.05 Q = 7.460 RN = .4220

ALP	CN	CM	CAB	CAF
-4.38	-.584	4.442	.296	.558
-3.27	-.404	3.038	.290	.559
-2.17	-.251	1.853	.290	.564
-1.07	-.004	.504	.285	.567
.03	.003	-.528	.281	.572
1.14	.225	-1.751	.280	.574
2.24	.384	-2.982	.279	.575
3.34	.557	-4.328	.287	.570
4.44	.749	-5.816	.297	.562
6.68	1.116	-8.653	.332	.541
-4.37	-.580	4.403	.294	.556

M = 1.10 Q = 7.700 RN = .4230

ALP	CN	CM	CAB	CAF
-4.40	-.596	4.520	.280	.555
-3.29	-.417	3.136	.276	.556
-2.17	-.248	1.843	.275	.562
-1.07	-.094	.685	.268	.561
.03	.054	-.437	.263	.560
1.14	.212	-1.625	.266	.562
2.25	.374	-2.857	.268	.565
3.35	.544	-4.177	.271	.563
4.47	.725	-5.575	.285	.553
6.71	1.094	-8.390	.317	.530
-4.40	-.595	4.514	.279	.553

M = 1.20 Q = 8.190 RN = .4320

ALP	CN	CM	CAB	CAF
-4.43	-.622	4.768	.252	.536
-3.31	-.441	3.367	.250	.532
-2.17	-.255	1.962	.243	.536
-1.08	-.107	.804	.235	.531
.04	.056	-.427	.231	.532
1.16	.226	-1.694	.238	.534
2.27	.387	-2.931	.244	.535
3.40	.566	-4.309	.248	.532
4.52	.751	-5.737	.265	.522
6.79	1.119	-8.494	.303	.501
-4.43	-.621	4.752	.251	.523

M = 1.30 Q = 8.400 RN = .4160

ALP	CN	CM	CAB	CAF
-4.46	-.647	5.025	.236	.455
-3.32	-.459	3.500	.240	.458
-2.20	-.278	2.164	.225	.464
-1.07	-.103	.886	.217	.473
.06	.076	-.574	.217	.474
1.18	.248	-1.905	.221	.474
2.31	.425	-3.267	.227	.475
3.43	.605	-4.665	.233	.475
4.57	.792	-6.100	.246	.468
6.85	1.150	-8.746	.278	.448
-2.20	-.284	2.213	.227	.470

M = 1.50 Q = 8.560 RN = .3840

ALP	CN	CM	CAB	CAF
-4.47	-.572	4.199	.234	.433
-3.34	-.410	3.001	.220	.454
-2.22	-.262	1.917	.219	.458
-1.09	-.114	.836	.221	.461
.04	.039	-.273	.220	.460
1.16	.191	-1.301	.220	.458
2.28	.340	-2.472	.216	.463
3.41	.503	-3.694	.223	.460
4.55	.685	-5.063	.238	.452
6.86	1.068	-7.897	.254	.449
.03	.027	-.187	.220	.459

M = 1.75 Q = 6.200 RN = .3600

ALP	CN	CM	CAB	CAF
6.06	.807	-5.703	.196	.414
5.03	.667	-4.737	.194	.414
4.01	.522	-3.719	.198	.422
2.99	.381	-2.716	.201	.416
1.91	.244	-1.746	.209	.417
1.38	.173	-1.229	.214	.412
.86	.107	-.758	.216	.412
.33	.042	-.298	.218	.414
-.19	-.023	.165	.218	.412
-.71	-.089	.633	.218	.412
-1.22	-.154	1.097	.221	.411
-1.75	-.222	1.580	.223	.403
-2.26	-.288	2.048	.220	.402
-3.24	-.418	2.967	.213	.403
-4.31	-.562	3.983	.204	.413

M = 2.00 Q = 5.850 RN = .3400

ALP	CN	CM	CAB	CAF
5.98	.777	-5.352	.168	.385
4.95	.632	-4.373	.167	.392
3.93	.491	-3.400	.170	.387
2.88	.357	-2.478	.172	.393
1.83	.227	-1.578	.173	.389
1.29	.157	-1.095	.171	.386
.78	.095	-.663	.170	.394
.26	.031	-.216	.168	.394
-.27	-.033	.229	.169	.386
-.78	-.095	.659	.172	.381
-1.29	-.158	1.098	.174	.381
-1.82	-.221	1.535	.176	.375
-2.34	-.286	1.981	.177	.378
-3.34	-.409	2.822	.177	.377
-4.37	-.548	3.776	.175	.377

M = 2.50 Q = 4.930 RN = .3200

ALP	CN	CM	CAB	CAF
5.93	.714	-4.622	.122	.351
4.91	.581	-3.790	.120	.354
3.89	.454	-2.970	.117	.357
2.83	.327	-2.149	.115	.356
1.81	.206	-1.361	.114	.349
1.26	.143	-.946	.114	.350
.74	.084	-.554	.114	.350
.22	.026	-.174	.115	.350
-.28	-.031	.208	.115	.359
-.80	-.091	.606	.116	.359
-1.31	-.150	.988	.116	.358
-1.83	-.210	1.384	.116	.351
-2.34	-.268	1.766	.117	.355
-3.35	-.385	2.512	.117	.357
-4.37	-.509	3.311	.117	.355

M = 3.00 Q = 4.130 RN = .3100

ALP	CN	CM	CAB	CAF
5.82	.675	-4.133	.089	.316
4.80	.543	-3.333	.089	.320
3.78	.416	-2.573	.087	.319
2.75	.298	-1.833	.085	.324
1.70	.184	-1.130	.084	.315
1.18	.125	-.772	.083	.325
.65	.070	-.431	.082	.325
.13	.014	-.090	.082	.329
-.36	-.039	.243	.083	.317
-.88	-.094	.578	.083	.322
-1.40	-.148	.912	.084	.321
-1.92	-.205	1.260	.084	.322
-2.40	-.256	1.573	.084	.330
-3.42	-.367	2.251	.085	.322
-4.45	-.487	2.996	.085	.320

M = 4.00 Q = 2.340 RN = .2580

ALP	CN	CM	CAB	CAF
5.71	.632	-3.725	.057	.289
4.71	.502	-2.954	.057	.270
3.69	.384	-2.246	.057	.280
2.67	.272	-1.569	.058	.274
1.65	.167	-.907	.058	.286
1.12	.110	-.646	.059	.296
.62	.060	-.357	.060	.265
.11	.013	-.075	.062	.253
-.40	-.041	.236	.062	.257
-.92	-.090	.535	.062	.257
-1.42	-.140	.831	.063	.256
-1.93	-.194	1.148	.062	.261
-2.44	-.244	1.456	.062	.263
-3.42	-.347	2.040	.061	.256
-4.43	-.458	2.678	.060	.270

M = 4.50 Q = 2.450 RN = .3200

ALP	CN	CM	CAB	CAF
5.71	.621	-3.658	.049	.285
4.71	.496	-2.898	.048	.287
3.69	.375	-2.183	.048	.286
2.67	.270	-1.573	.048	.294
1.65	.166	-.986	.048	.279
1.13	.109	-.638	.049	.281
.61	.060	-.367	.049	.275
.11	.010	-.063	.050	.272
-.39	-.039	.241	.050	.269
-.91	-.089	.535	.050	.266
-1.41	-.136	.808	.051	.277
-1.92	-.190	1.110	.050	.274
-2.43	-.243	1.412	.050	.281
-3.41	-.341	1.983	.050	.273
-4.43	-.451	2.610	.049	.276

Table 23. Aerodynamic Coefficients for Configuration B1T5X3

M = .80 Q = 5.700 RN = .3810

ALP	CN	CM	CAB	CAF
-4.27	-.604	4.811	.327	.444
-3.19	-.411	3.236	.303	.444
-2.12	-.241	1.665	.281	.465
-1.05	-.065	.384	.255	.475
.02	.114	-1.044	.254	.473
1.10	.295	-2.567	.265	.476
2.17	.473	-4.038	.285	.471
3.23	.651	-5.514	.309	.463
4.30	.835	-7.038	.331	.460
6.46	1.222	-.211	.365	.452
-4.26	-.601	-.792	.325	.439
.02	.115	-1.100	.255	.488

M = 1.05 Q = 7.460 RN = .4270

ALP	CN	CM	CAB	CAF
-4.33	-.578	4.582	.428	.551
-3.24	-.410	3.239	.403	.555
-2.15	-.248	1.939	.378	.573
-1.06	-.093	.692	.342	.594
.02	.092	-.473	.338	.606
1.11	.213	-1.786	.349	.609
2.21	.384	-3.125	.380	.576
3.30	.556	-4.339	.412	.569
4.39	.714	-5.783	.446	.546
6.59	1.066	-8.599	.479	.545
-4.34	-.586	4.654	.429	.544

M = 1.50 Q = 8.560 RN = .3860

ALP	CN	CM	CAB	CAF
-4.42	-.589	4.584	.249	.449
-3.30	-.429	3.350	.250	.450
-2.18	-.262	2.068	.247	.449
-1.07	-.104	.825	.244	.449
.04	.051	-.404	.244	.449
1.17	.227	-1.747	.250	.448
2.27	.377	-2.939	.251	.456
3.38	.539	-4.205	.252	.460
4.51	.710	-5.501	.250	.464
6.78	1.061	-8.166	.250	.464
.03	.044	-.349	.245	.454

M = 3.00 Q = 4.130 RN = .3100

ALP	CN	CM	CAB	CAF
5.76	.668	-4.228	.107	.319
4.76	.541	-3.446	.107	.322
3.73	.416	-2.659	.106	.331
2.70	.295	-1.887	.104	.315
1.68	.181	-1.164	.103	.317
1.12	.121	-.781	.102	.315
.64	.067	-.436	.101	.314
.11	.013	-.084	.101	.322
-.39	-.041	.268	.101	.316
-.90	-.095	.613	.101	.309
-1.42	-.151	.970	.101	.336
-1.94	-.208	1.333	.101	.318
-2.44	-.262	1.675	.101	.337
-3.45	-.370	2.361	.102	.324
-4.47	-.480	3.109	.103	.326

M = .90 Q = 6.520 RN = .4010

ALP	CN	CM	CAB	CAF
-4.29	-.561	4.389	.313	.449
-3.22	-.398	3.069	.294	.449
-2.13	-.236	1.798	.268	.467
-1.06	-.086	.610	.243	.479
.02	.071	-.646	.231	.501
1.10	.220	-1.832	.242	.498
2.17	.375	-3.069	.263	.479
3.26	.545	-4.418	.287	.479
4.34	.724	-5.892	.311	.467
6.51	1.176	-9.252	.351	.472
-4.29	-.561	4.384	.313	.445

M = 1.10 Q = 7.700 RN = .4230

ALP	CN	CM	CAB	CAF
-4.36	-.586	4.621	.399	.554
-3.26	-.422	3.314	.343	.548
-2.16	-.256	2.001	.358	.569
-1.07	-.101	.774	.332	.595
.03	.054	-.460	.331	.602
1.12	.207	-1.676	.335	.600
2.21	.369	-2.953	.358	.582
3.30	.525	-4.215	.383	.578
4.41	.699	-5.605	.409	.567
6.62	1.055	-8.394	.445	.568
-4.36	-.593	4.683	.400	.562

M = 1.75 Q = 6.200 RN = .3600

ALP	CN	CM	CAB	CAF
6.14	.855	-6.404	.177	.405
5.11	.701	-5.282	.173	.406
4.07	.549	-4.156	.169	.412
3.03	.404	-3.051	.166	.414
1.99	.264	-2.002	.165	.415
1.43	.187	-1.414	.167	.417
.94	.123	-.930	.167	.410
.41	.055	-.424	.167	.413
-.08	-.011	.085	.166	.412
-.62	-.082	.626	.170	.411
-1.13	-.148	1.123	.172	.404
-1.65	-.219	1.654	.174	.405
-2.15	-.285	2.149	.175	.401
-3.19	-.426	3.196	.174	.404
-4.22	-.571	4.288	.175	.412

M = 4.00 Q = 2.340 RN = .2500

ALP	CN	CM	CAB	CAF
5.85	.644	-3.888	.063	.288
4.84	.514	-3.102	.063	.295
3.94	.391	-2.357	.063	.282
2.81	.286	-1.731	.063	.295
1.75	.177	-1.082	.065	.274
1.26	.128	-.782	.065	.275
.75	.074	-.455	.065	.272
.25	.026	-.164	.066	.273
-.24	-.023	.145	.066	.259
-.77	-.077	.472	.066	.260
-1.26	-.127	.787	.067	.257
-1.76	-.179	1.115	.066	.266
-2.29	-.233	1.442	.067	.271
-3.27	-.332	2.042	.066	.263
-4.27	-.446	2.723	.066	.269

M = .95 Q = 6.750 RN = .4090

ALP	CN	CM	CAB	CAF
-4.31	-.594	4.751	.335	.507
-3.22	-.408	3.224	.319	.507
-2.14	-.253	1.960	.296	.521
-1.06	-.080	.551	.272	.544
.02	.082	-.763	.262	.555
1.10	.245	-2.080	.272	.550
2.19	.403	-3.353	.291	.540
3.27	.575	-4.737	.317	.519
4.36	.745	-6.112	.338	.521
6.53	1.172	-9.579	.481	.463
-4.31	-.604	4.840	.335	.506

M = 1.20 Q = 8.190 RN = .4320

ALP	CN	CM	CAB	CAF
-4.38	-.612	4.892	.367	.578
-3.27	-.442	3.542	.376	.574
-2.17	-.280	2.253	.391	.574
-1.07	-.116	.946	.397	.576
.03	.048	-.367	.401	.572
1.13	.211	-1.673	.400	.574
2.24	.381	-3.029	.394	.575
3.34	.550	-4.378	.389	.574
4.45	.718	-5.705	.392	.573
6.68	1.069	-8.440	.416	.560
-4.38	-.609	4.867	.366	.566

M = 2.00 Q = 5.850 RN = .3400

ALP	CN	CM	CAB	CAF
5.93	.781	-5.638	.144	.383
4.90	.632	-4.589	.142	.382
3.87	.489	-3.557	.139	.383
2.92	.353	-2.574	.137	.384
1.9[illegible]	.222	-1.626	.136	.386
1.4[illegible]	.152	-1.110	.136	.387
.73	.089	-.651	.135	.391
.21	.026	-.192	.135	.385
-.30	-.037	.272	.136	.384
-.82	-.100	.731	.137	.383
-1.33	-.164	1.193	.139	.383
-1.83	-.227	1.652	.140	.381
-2.35	-.291	2.115	.140	.380
-3.37	-.420	3.039	.141	.385
-4.40	-.557	4.036	.142	.422

M = 4.50 Q = 2.450 RN = .3200

ALP	CN	CM	CAB	CAF
5.74	.625	-3.754	.055	.292
4.75	.500	-3.003	.055	.284
3.73	.380	-2.273	.055	.272
2.70	.270	-1.614	.055	.274
1.71	.170	-1.034	.054	.287
1.14	.114	-.695	.054	.275
.66	.062	-.382	.054	.272
.14	.014	-.087	.054	.272
-.37	-.036	.216	.054	.283
-.88	-.086	.530	.055	.280
-1.38	-.136	.834	.054	.292
-1.88	-.190	1.164	.055	.266
-2.40	-.241	1.468	.054	.279
-3.38	-.341	2.066	.054	.283
-4.39	-.458	2.755	.054	.287

M = 1.00 Q = 7.090 RN = .4190

ALP	CN	CM	CAB	CAF
-4.33	-.607	4.842	.402	.570
-3.23	-.429	3.434	.388	.540
-2.15	-.257	2.024	.359	.550
-1.06	-.089	.650	.322	.568
.02	.069	-.637	.312	.568
1.11	.237	-1.992	.329	.572
2.19	.461	-3.327	.360	.555
3.29	.585	-4.829	.398	.536
4.38	.761	-6.271	.435	.537
6.57	1.127	-9.227	.484	.508
-4.32	-.605	4.876	.406	.579

M = 1.30 Q = 8.400 RN = .4160

ALP	CN	CM	CAB	CAF
-4.39	-.606	4.852	.326	.513
-3.28	-.432	3.493	.323	.508
-2.17	-.272	2.193	.323	.509
-1.06	-.102	.829	.322	.510
.04	.065	-.521	.323	.514
1.15	.228	-1.828	.328	.509
2.26	.398	-3.166	.330	.510
3.37	.560	-4.464	.326	.510
4.49	.731	-5.795	.323	.502
6.74	1.086	-8.553	.333	.503
-3.28	-.435	3.505	.326	.501

M = 2.50 Q = 4.930 RN = .3200

ALP	CN	CM	CAB	CAF
5.92	.714	-4.804	.121	.355
4.91	.582	-3.944	.119	.351
3.87	.451	-3.073	.114	.357
2.83	.324	-2.213	.110	.358
1.81	.207	-1.420	.108	.362
1.26	.142	-.973	.107	.361
.75	.085	-.588	.107	.358
.22	.026	-.177	.107	.360
-.26	-.030	.205	.108	.355
-.78	-.089	.611	.108	.357
-1.28	-.145	.997	.109	.359
-1.82	-.208	1.431	.109	.357
-2.32	-.265	1.814	.110	.366
-3.33	-.383	2.602	.111	.358
-4.37	-.508	3.433	.112	.359

Table 24. Aerodynamic Coefficients for Configuration B1T7X1

M = .80 Q = 5.700 RN = .3810

ALP	CN	CM	CAB	CAF
-4.37	-.805	6.339	.136	.315
-3.27	-.586	4.614	.132	.321
-2.17	-.357	2.803	.129	.328
-1.06	-.130	1.002	.127	.331
.04	.091	-.765	.127	.335
1.13	.304	-2.472	.126	.331
2.24	.535	-4.290	.131	.330
3.33	.751	-6.007	.131	.331
4.44	.974	-7.763	.138	.329
6.65	1.417	-11.175	.171	.309

M = 1.05 Q = 7.460 RN = .4220

ALP	CN	CM	CAB	CAF
-4.52	-.956	7.806	.250	.470
-3.38	-.703	5.751	.244	.478
-2.24	-.448	3.653	.240	.484
-1.10	-.188	1.503	.241	.487
.04	.062	-.501	.241	.490
1.18	.319	-2.580	.239	.488
2.32	.582	-4.765	.240	.499
3.46	.841	-6.855	.243	.498
4.60	1.086	-8.833	.255	.501
6.88	1.575	-12.711	.300	.494
3.46	.841	-6.856	.242	.510

M = 1.75 Q = 6.200 RN = .3600

ALP	CN	CM	CAB	CAF
6.31	1.104	-7.601	.200	.408
5.29	.998	-7.035	.197	.404
4.21	.769	-5.438	.180	.401
3.15	.589	-4.219	.177	.407
2.07	.379	-2.787	.169	.421
1.52	.274	-1.990	.176	.422
1.00	.180	-1.279	.177	.428
.47	.084	-.601	.178	.429
-.05	-.008	.060	.177	.426
-.57	-.104	.738	.178	.422
-1.10	-.198	1.404	.176	.425
-1.63	-.298	2.113	.174	.423
-2.15	-.393	2.794	.176	.415
-3.18	-.584	4.150	.182	.399
-4.23	-.769	5.401	.184	.403

M = 4.00 Q = 2.340 RN = .2500

ALP	CN	CM	CAB	CAF
5.82	.386	-3.957	.046	.336
4.80	.546	-3.122	.046	.336
3.79	.421	-2.398	.045	.345
2.76	.305	-1.738	.045	.335
1.73	.186	-1.045	.045	.325
1.21	.128	-.715	.044	.344
.70	.074	-.432	.045	.321
.17	.020	-.115	.045	.314
-.31	-.034	.206	.045	.320
-.83	-.087	.499	.045	.308
-1.34	-.141	.801	.045	.314
-1.85	-.196	1.074	.045	.307
-2.37	-.256	1.452	.044	.312
-3.35	-.365	2.086	.044	.328
-4.38	-.484	2.759	.044	.324

M = .90 Q = 6.520 RN = .4010

ALP	CN	CM	CAB	CAF
-4.44	-.842	6.662	.105	.389
-3.31	-.614	4.875	.098	.404
-2.20	-.382	3.038	.094	.415
-1.08	-.131	.992	.094	.412
.03	.076	-.645	.093	.413
1.15	.290	-2.328	.092	.416
2.27	.511	-4.038	.092	.409
3.38	.732	-5.798	.097	.397
4.51	.983	-7.796	.105	.400
6.77	1.511	-12.022	.139	.373
3.38	.751	-5.964	.096	.423
-1.09	-.150	1.149	.094	.414

M = 1.10 Q = 7.700 RN = .4230

ALP	CN	CM	CAB	CAF
-4.53	-.952	7.759	.240	.450
-3.40	-.713	5.839	.229	.456
-2.25	-.463	3.814	.225	.462
-1.11	-.207	1.724	.223	.461
.04	.062	-.490	.222	.459
1.19	.329	-2.662	.221	.459
2.33	.583	-4.733	.226	.472
3.47	.823	-6.674	.235	.470
4.61	1.055	-8.512	.250	.472
6.91	1.522	-12.164	.295	.471
1.19	.327	-2.649	.224	.481

M = 2.00 Q = 5.850 RN = .3400

ALP	CN	CM	CAB	CAF
6.14	1.016	-6.976	.197	.404
5.12	.826	-5.710	.192	.411
4.06	.621	-4.246	.187	.422
3.00	.439	-2.973	.183	.423
1.96	.272	-1.812	.184	.430
1.41	.190	-1.254	.184	.434
.89	.119	-.789	.184	.426
.37	.049	-.324	.184	.430
-.16	-.021	.144	.183	.431
-.68	-.091	.601	.183	.428
-1.21	-.163	1.077	.182	.426
-1.73	-.237	1.572	.182	.424
-2.26	-.318	2.126	.182	.426
-3.26	-.483	3.266	.178	.420
-4.32	-.682	4.676	.179	.418

M = 4.50 Q = 2.450 RN = .3200

ALP	CN	CM	CAB	CAF
5.94	.676	-3.866	.027	.295
4.95	.546	-3.104	.027	.319
3.94	.424	-2.400	.027	.300
2.91	.311	-1.764	.026	.309
1.90	.196	-1.117	.025	.319
1.36	.138	-.789	.025	.305
.85	.085	-.487	.025	.304
.33	.035	-.197	.025	.311
-.15	-.015	.096	.025	.290
-.68	-.069	.389	.025	.296
-1.18	-.119	.665	.025	.316
-1.69	-.173	.990	.025	.302
-2.19	-.232	1.323	.024	.293
-3.19	-.337	1.909	.024	.308
-4.21	-.455	2.568	.024	.305

M = .95 Q = 6.750 RN = .4090

ALP	CN	CM	CAB	CAF
-4.49	-.994	8.135	.141	.452
-3.35	-.695	5.652	.137	.466
-2.21	-.429	3.500	.135	.486
-1.09	-.174	1.429	.135	.480
.04	.078	-.621	.133	.476
1.16	.322	-2.619	.132	.483
2.30	.591	-4.832	.132	.481
3.44	.887	-7.263	.133	.473
4.58	1.184	-9.718	.137	.474
6.85	1.697	-13.835	.168	.463
1.16	.318	-2.588	.132	.493

M = 1.30 Q = 8.400 RN = .4160

ALP	CN	CM	CAB	CAF
-4.52	-.722	5.575	.232	.402
-3.36	-.515	4.001	.216	.411
-2.22	-.319	2.501	.211	.411
-1.08	-.124	.989	.214	.417
.06	.076	-.574	.216	.417
1.20	.275	-2.118	.217	.418
2.34	.472	-3.626	.219	.421
3.48	.668	-5.127	.230	.418
4.64	.880	-6.735	.240	.423
6.97	1.320	-10.077	.270	.436
.06	.074	-.547	.216	.432

M = 2.50 Q = 4.930 RN = .3200

ALP	CN	CM	CAB	CAF
6.11	.785	-4.808	.131	.375
5.08	.638	-3.895	.132	.378
4.05	.496	-3.017	.136	.383
2.99	.359	-2.181	.138	.379
1.96	.234	-1.425	.139	.386
1.41	.166	-1.010	.140	.375
.89	.105	-.639	.141	.383
.38	.045	-.276	.141	.378
-.15	-.018	.108	.141	.381
-.67	-.080	.488	.141	.379
-1.17	-.141	.862	.140	.377
-1.68	-.201	1.234	.140	.379
-2.21	-.267	1.631	.140	.378
-3.22	-.393	2.403	.140	.371
-4.26	-.528	3.233	.139	.373

M = 1.00 Q = 7.090 RN = .4190

ALP	CN	CM	CAB	CAF
-4.51	-.986	8.079	.205	.456
-3.37	-.718	5.895	.199	.464
-2.23	-.438	3.560	.203	.467
-1.09	-.171	1.381	.205	.473
.04	.076	-.621	.204	.467
1.18	.340	-2.754	.203	.465
2.32	.621	-5.093	.198	.471
3.46	.894	-7.325	.200	.472
4.60	1.157	-9.462	.207	.469
6.88	1.661	-13.524	.245	.464
.03	.063	-.516	.203	.495

M = 1.50 Q = 8.560 RN = .3860

ALP	CN	CM	CAB	CAF
-4.58	-.750	5.623	.239	.418
-3.45	-.575	4.318	.232	.412
-2.30	-.405	3.105	.224	.412
-1.12	-.184	1.475	.215	.411
.05	.072	-.572	.214	.411
1.23	.328	-2.579	.222	.424
2.38	.505	-3.819	.230	.428
3.53	.690	-5.184	.235	.437
4.68	.865	-6.459	.241	.450
7.00	1.276	-9.512	.261	.444
.04	.061	-.486	.213	.413

M = 3.00 Q = 4.130 RN = .3100

ALP	CN	CM	CAB	CAF
5.93	.737	-4.361	.090	.360
4.92	.597	-3.526	.089	.365
3.88	.461	-2.720	.088	.359
2.83	.329	-1.932	.086	.350
1.80	.209	-1.227	.086	.354
1.25	.141	-.825	.086	.347
.74	.084	-.496	.087	.351
.23	.027	-.161	.088	.352
-.29	-.033	.193	.088	.354
-.81	-.093	.545	.088	.355
-1.32	-.151	.885	.089	.353
-1.82	-.210	1.238	.089	.351
-2.33	-.269	1.582	.088	.352
-3.35	-.388	2.288	.088	.345
-4.38	-.519	3.071	.088	.352

Table 25. Aerodynamic Coefficients for Configuration B1T7X2

M = .80 Q = 5.700 RN = .3810

ALP	CN	CM	CAB	CAF
-4.03	-.842	6.395	.146	.384
-3.32	-.619	4.692	.138	.396
-2.20	-.401	3.079	.140	.313
-1.08	-.178	1.480	.140	.310
.03	.040	-.230	.138	.327
1.14	.256	-1.861	.143	.317
2.26	.477	-3.917	.141	.319
3.37	.691	-5.118	.140	.318
4.49	.913	-6.772	.155	.384
6.74	1.362	-10.091	.176	.284
.03	.029	-.148	.141	.335

M = .90 Q = 6.520 RN = .4010

ALP	CN	CM	CAB	CAF
-4.50	-.852	6.457	.129	.348
-3.36	-.610	4.631	.120	.368
-2.22	-.387	2.962	.118	.377
-1.09	-.175	1.389	.118	.379
.04	.037	-.195	.116	.389
1.17	.251	-1.773	.117	.380
2.30	.465	-3.363	.121	.377
3.44	.687	-5.016	.127	.369
4.58	.917	-6.729	.141	.368
6.88	1.449	-10.775	.164	.322
.03	.030	-.139	.115	.395

M = .95 Q = 6.750 RN = .4090

ALP	CN	CM	CAB	CAF
-4.59	-1.054	8.300	.130	.429
-3.42	-.734	5.764	.119	.451
-2.25	-.455	3.503	.112	.472
-1.10	-.190	1.526	.111	.471
.05	.062	-.428	.109	.479
1.20	.332	-2.529	.110	.473
2.36	.596	-4.574	.111	.476
3.53	.895	-6.919	.120	.459
4.70	1.204	-9.352	.134	.447
7.02	1.728	-13.334	.182	.439
.04	.053	-.351	.108	.487

M = 1.00 Q = 7.090 RN = .4190

ALP	CN	CM	CAB	CAF
-4.60	-1.021	8.020	.140	.428
-3.44	-.750	5.903	.150	.442
-2.27	-.465	3.662	.145	.456
-1.11	-.195	1.572	.145	.469
.05	.056	-.362	.144	.476
1.21	.317	-2.364	.143	.466
2.38	.598	-4.571	.149	.462
3.54	.871	-6.702	.154	.459
4.70	1.144	-8.826	.165	.454
7.04	1.701	-13.133	.184	.446
.04	.041	-.241	.143	.484

M = 1.05 Q = 7.400 RN = .4220

ALP	CN	CM	CAB	CAF
-4.62	-.987	7.885	.228	.454
-3.45	-.748	5.814	.215	.465
-2.29	-.479	3.784	.206	.477
-1.12	-.215	1.727	.205	.485
.04	.035	-.194	.205	.490
1.20	.286	-2.123	.204	.490
2.37	.555	-4.210	.200	.486
3.54	.819	-6.257	.210	.486
4.70	1.079	-8.270	.235	.481
7.04	1.605	-12.301	.264	.474
.04	.028	-.132	.205	.493

M = 1.10 Q = 7.700 RN = .4230

ALP	CN	CM	CAB	CAF
-4.62	-.974	7.608	.235	.457
-3.46	-.734	5.766	.221	.465
-2.30	-.484	3.845	.212	.473
-1.13	-.231	1.892	.210	.472
.04	.034	-.168	.204	.466
1.21	.296	-2.203	.210	.468
2.38	.543	-4.186	.215	.475
3.54	.793	-6.022	.229	.475
4.71	1.033	-7.849	.243	.474
7.04	1.510	-11.418	.273	.478
.03	.012	.011	.206	.475

M = 1.30 Q = 8.400 RN = .4160

ALP	CN	CM	CAB	CAF
-4.55	-.671	4.892	.209	.402
-3.38	-.460	3.348	.204	.409
-2.21	-.259	1.882	.202	.412
-1.05	-.059	.415	.200	.419
.11	.137	-1.033	.200	.419
1.26	.330	-2.444	.199	.420
2.42	.524	-3.852	.203	.422
3.59	.724	-5.301	.212	.418
4.76	.924	-6.726	.224	.417
7.13	1.379	-10.042	.251	.413
.11	.133	-.994	.198	.427

M = 1.50 Q = 8.560 RN = .3860

ALP	CN	CM	CAB	CAF
-4.64	-.756	5.441	.208	.412
-3.48	-.575	4.186	.202	.414
-2.29	-.366	2.736	.201	.414
-1.09	-.181	.735	.200	.406
.11	.152	-1.157	.198	.414
1.34	.430	-3.219	.201	.432
2.50	.603	-4.384	.203	.435
3.66	.778	-5.605	.212	.434
4.82	.944	-6.731	.221	.433
7.17	1.325	-9.336	.236	.436
.12	.157	-1.185	.199	.420

M = 1.75 Q = 6.200 RN = .3600

ALP	CN	CM	CAB	CAF
6.12	1.111	-8.286	.194	.402
5.12	1.011	-7.711	.187	.403
4.06	.848	-6.675	.184	.404
3.00	.673	-5.424	.197	.418
1.95	.460	-3.778	.182	.428
1.41	.335	-2.759	.172	.429
.88	.221	-1.839	.176	.430
.35	.098	-.832	.183	.435
-.19	-.030	.319	.190	.430
-.68	-.176	1.458	.194	.424
-1.22	-.280	2.463	.188	.429
-1.76	-.418	3.445	.175	.423
-2.23	-.530	4.346	.173	.414
-3.27	-.719	5.744	.169	.414
-4.32	-.897	7.020	.165	.402

M = 2.00 Q = 5.050 RN = .3400

ALP	CN	CM	CAB	CAF
6.05	1.109	-8.326	.128	.416
5.02	.926	-7.051	.114	.424
3.98	.696	-5.278	.122	.421
2.92	.483	-3.625	.130	.428
1.88	.289	-2.122	.141	.435
1.34	.197	-1.429	.144	.426
.81	.117	-.846	.144	.429
.30	.044	-.321	.145	.435
-.20	-.029	.216	.145	.427
-.75	-.109	.785	.146	.427
-1.26	-.184	1.326	.147	.419
-1.78	-.268	1.952	.140	.417
-2.28	-.358	2.638	.147	.416
-3.32	-.557	4.153	.139	.409
-4.36	-.781	5.909	.127	.404

M = 2.50 Q = 4.930 RN = .3200

ALP	CN	CM	CAB	CAF
6.07	.867	-5.860	.102	.372
5.02	.701	-4.753	.097	.368
3.98	.542	-3.674	.088	.370
2.93	.397	-2.690	.079	.377
2.41	.319	-2.148	.074	.375
1.87	.248	-1.681	.074	.378
1.34	.178	-1.206	.072	.385
.86	.113	-.768	.071	.387
.33	.044	-.300	.070	.381
-.19	-.025	.172	.071	.388
-.71	-.095	.644	.074	.381
-1.75	-.234	1.585	.074	.373
-2.79	-.376	2.548	.074	.385
-3.27	-.443	3.004	.075	.387
-4.31	-.592	4.008	.083	.386

M = 3.00 Q = 4.130 RN = .3100

ALP	CN	CM	CAB	CAF
5.90	.806	-5.257	.057	.356
4.89	.659	-4.314	.052	.345
3.85	.510	-3.350	.045	.347
2.80	.369	-2.431	.041	.363
1.77	.232	-1.544	.039	.353
1.24	.161	-1.005	.038	.351
.73	.094	-.624	.037	.366
.21	.026	-.174	.037	.365
-.31	-.040	.266	.037	.351
-.83	-.106	.705	.037	.359
-1.33	-.170	1.132	.036	.356
-1.87	-.243	1.609	.037	.368
-2.36	-.309	2.040	.039	.349
-3.37	-.439	2.892	.040	.350
-4.39	-.578	3.795	.043	.353

M = 4.00 Q = 2.340 RN = .2500

ALP	CN	CM	CAB	CAF
5.81	.730	-4.832	.029	.324
4.82	.601	-3.885	.029	.318
3.88	.466	-2.958	.029	.327
2.78	.343	-2.283	.029	.317
1.76	.214	-1.387	.029	.311
1.23	.144	-.919	.029	.306
.73	.084	-.546	.030	.310
.21	.027	-.186	.030	.345
-.28	-.034	.220	.030	.302
-.80	-.093	.594	.030	.309
-1.30	-.153	.973	.030	.318
-1.82	-.210	1.398	.030	.310
-2.31	-.281	1.804	.030	.300
-3.32	-.401	2.546	.029	.312
-4.32	-.529	3.333	.029	.309

M = 4.50 Q = 2.450 RN = .3200

ALP	CN	CM	CAB	CAF
5.83	.700	-4.365	.020	.331
4.83	.572	-3.540	.020	.323
3.82	.448	-2.784	.020	.329
2.80	.329	-2.063	.020	.331
1.78	.206	-1.387	.020	.340
1.24	.138	-.861	.021	.316
.75	.083	-.526	.021	.322
.23	.026	-.174	.021	.303
-.26	-.030	.197	.021	.316
-.78	-.087	.554	.021	.309
-1.30	-.143	.902	.021	.318
-1.81	-.204	1.293	.020	.323
-2.31	-.268	1.698	.020	.321
-3.36	-.383	2.395	.019	.318
-4.31	-.503	3.115	.019	.320

Table 26. Aerodynamic Coefficients for Configuration B1T7X3

M = .80 Q = 5.700 RN = .3810

ALP	CN	CM	CAB	CAF
-4.31	-.746	6.078	.196	.363
-3.22	-.532	4.338	.187	.365
-2.14	-.330	2.699	.178	.365
-1.05	-.115	.091	.176	.370
.03	.099	-.878	.174	.371
1.12	.309	-2.602	.174	.374
2.20	.525	-4.410	.180	.378
3.29	.737	-6.120	.181	.383
4.37	.943	-7.829	.190	.375
6.55	1.369	-11.253	.216	.357
-4.32	-.757	6.164	.196	.359

M = .90 Q = 6.520 RN = .4010

ALP	CN	CM	CAB	CAF
-4.37	-.003	6.593	.144	.419
-3.26	-.563	4.619	.136	.424
-2.17	-.358	2.923	.127	.425
-1.07	-.135	1.096	.117	.435
.03	.079	-.679	.113	.442
1.13	.286	-2.350	.112	.435
2.23	.503	-4.162	.113	.442
3.33	.729	-6.002	.118	.434
4.43	.949	-7.828	.127	.422
6.65	1.495	-12.046	.165	.398
-4.37	-.793	6.493	.151	.413

M = .95 Q = 6.750 RN = .4090

ALP	CN	CM	CAB	CAF
-4.39	-.080	7.389	.224	.432
-3.29	-.628	5.236	.215	.449
-2.18	-.380	3.158	.201	.463
-1.07	-.148	1.222	.183	.464
.03	.075	-.645	.184	.479
1.13	.300	-2.535	.181	.484
2.24	.552	-4.669	.186	.483
3.36	.815	-6.892	.193	.467
4.48	1.095	-9.260	.209	.453
6.69	1.605	-13.605	.236	.454
-4.40	-.083	7.425	.220	.440

M = 1.00 Q = 7.090 RN = .4190

ALP	CN	CM	CAB	CAF
-4.40	-.866	7.28[illegible]	.306	.444
-3.29	-.607	5.088	.288	.453
-2.18	-.367	3.035	.270	.471
-1.07	-.127	1.035	.261	.481
.04	.085	-.730	.262	.485
1.15	.308	-2.587	.258	.493
2.26	.567	-4.779	.255	.488
3.37	.799	-6.745	.271	.474
4.48	1.055	-8.904	.285	.484
6.72	1.547	-13.029	.331	.473
-4.41	-.868	7.298	.297	.454

M = 1.05 Q = 7.460 RN = .4220

ALP	CN	CM	CAB	CAF
-4.42	-.845	7.054	.337	.481
-3.31	-.609	5.070	.317	.481
-2.19	-.377	3.120	.299	.502
-1.08	-.142	1.165	.288	.505
.04	.070	-.580	.285	.519
1.15	.292	-2.443	.281	.517
2.26	.527	-4.484	.287	.510
3.38	.765	-6.600	.302	.501
4.49	.990	-8.261	.321	.502
6.74	1.481	-12.358	.375	.498
-4.42	-.848	7.083	.339	.479

M = 1.10 Q = 7.780 RN = .4230

ALP	CN	CM	CAB	CAF
-4.43	-.837	6.978	.322	.473
-3.32	-.621	5.194	.298	.472
-2.21	-.409	3.445	.276	.486
-1.08	-.179	1.527	.262	.490
.03	.051	-.414	.260	.487
1.16	.306	-2.551	.262	.497
2.27	.523	-4.346	.269	.505
3.39	.738	-6.127	.284	.501
4.50	.955	-7.906	.308	.499
6.76	1.422	-11.746	.365	.491
-4.44	-.847	7.064	.325	.476

M = 1.20 Q = 8.190 RN = .4320

ALP	CN	CM	CAB	CAF
-4.43	-.740	6.315	.297	.480
-3.31	-.562	4.660	.288	.474
-2.19	-.353	2.950	.283	.472
-1.08	-.157	1.342	.277	.468
.04	.050	-.429	.282	.466
1.16	.257	-2.071	.277	.475
2.28	.462	-3.748	.273	.487
3.40	.675	-5.471	.288	.491
4.53	.885	-7.103	.306	.490
6.79	1.308	-10.551	.342	.490
-4.44	-.771	6.348	.296	.486

M = 1.30 Q = 8.400 RN = .4180

ALP	CN	CM	CAB	CAF
-4.45	-.689	5.525	.251	.433
-3.31	-.483	3.881	.235	.465
-2.19	-.296	2.390	.233	.447
-1.07	-.110	.910	.240	.443
.05	.075	-.577	.246	.440
1.17	.256	-2.030	.246	.436
2.29	.441	-3.496	.246	.439
3.42	.641	-5.093	.254	.441
4.56	.847	-6.742	.259	.447
6.85	1.302	-10.383	.296	.463
.05	.065	-.492	.245	.446

M = 1.50 Q = 8.560 RN = .3860

ALP	CN	CM	CAB	CAF
-4.53	-.845	6.893	.144	.455
-3.39	-.673	5.440	.141	.447
-2.24	-.424	3.972	.140	.449
-1.10	-.175	1.484	.138	.448
.04	.075	-.637	.135	.449
1.19	.323	-2.697	.136	.462
1.34	.583	-4.855	.137	.471
3.50	.786	-6.396	.144	.475
4.63	.958	-7.690	.157	.476
6.92	1.359	-10.782	.191	.481
.04	.063	-.520	.136	.447

M = 1.75 Q = 6.200 RN = .3600

ALP	CN	CM	CAB	CAF
6.19	1.293	-10.282	.084	.425
5.16	1.035	-8.487	.075	.425
4.13	.816	-6.709	.070	.425
3.08	.602	-4.949	.067	.426
2.05	.399	-3.296	.061	.434
1.40	.207	-2.356	.056	.434
.99	.186	-1.529	.055	.435
.46	.080	-.724	.055	.432
-.04	-.007	.063	.056	.431
-.58	-.110	.909	.059	.431
-1.07	-.200	1.702	.062	.426
-1.61	-.310	2.539	.064	.426
-2.12	-.410	3.362	.065	.425
-3.13	-.609	4.966	.068	.418
-4.17	-.818	6.673	.073	.413

M = 2.00 Q = 5.850 RN = .3400

ALP	CN	CM	CAB	CAF
6.02	1.067	-8.314	.067	.413
4.98	.873	-6.850	.059	.422
3.95	.679	-5.345	.053	.416
2.90	.490	-3.926	.048	.415
1.87	.320	-2.537	.040	.424
1.33	.225	-1.786	.034	.420
.81	.130	-1.085	.037	.421
.29	.050	-.398	.039	.414
-.21	-.035	.283	.040	.415
-.74	-.126	.999	.045	.411
-1.26	-.215	1.701	.046	.412
-1.78	-.303	2.392	.048	.415
-2.30	-.389	3.070	.050	.413
-3.30	-.560	4.376	.055	.410
-4.34	-.745	5.833	.060	.412

M = 2.50 Q = 4.930 RN = .3200

ALP	CN	CM	CAB	CAF
6.03	.953	-7.019	.062	.379
5.01	.785	-5.821	.057	.372
3.98	.615	-4.500	.053	.375
2.93	.450	-3.372	.049	.376
1.91	.291	-2.193	.044	.377
1.36	.205	-1.543	.043	.368
.86	.129	-.966	.043	.377
.32	.051	-.387	.045	.359
-.18	-.027	.207	.044	.370
-.69	-.104	.789	.047	.378
-1.22	-.187	1.401	.048	.369
-1.73	-.265	1.984	.048	.382
-2.24	-.343	2.570	.049	.369
-3.24	-.497	3.696	.051	.389
-4.28	-.660	4.897	.055	.378

M = 3.00 Q = 4.130 RN = .3100

ALP	CN	CM	CAB	CAF
5.07	.858	-6.013	.051	.356
4.09	.703	-4.964	.049	.357
3.06	.547	-3.879	.044	.355
2.03	.394	-2.801	.043	.351
1.00	.249	-1.778	.041	.356
1.26	.174	-1.237	.040	.342
.76	.106	-.747	.040	.362
.22	.032	-.232	.039	.351
-.26	-.036	.264	.039	.364
-.79	-.110	.786	.041	.356
-1.31	-.181	1.295	.042	.350
-1.81	-.251	1.791	.043	.360
-2.32	-.322	2.284	.043	.353
-3.33	-.462	3.271	.044	.380
-4.35	-.613	4.333	.046	.353

M = 4.00 Q = 2.340 RN = .2500

ALP	CN	CM	CAB	CAF
5.06	.752	-4.907	.040	.312
4.06	.611	-4.023	.040	.311
3.05	.479	-3.174	.040	.313
2.02	.350	-2.340	.040	.310
1.01	.224	-1.520	.040	.309
1.27	.152	-1.020	.042	.297
.77	.089	-.594	.043	.304
.26	.030	-.205	.042	.292
-.25	-.029	.198	.041	.288
-.76	-.089	.596	.041	.293
-1.26	-.151	1.000	.041	.285
-1.77	-.216	1.440	.042	.299
-2.28	-.281	1.878	.042	.296
-3.26	-.400	2.650	.041	.295
-4.27	-.527	3.468	.041	.307

M = 4.50 Q = 2.490 RN = .3200

ALP	CN	CM	CAB	CAF
5.79	.712	-4.533	.046	.327
4.79	.576	-3.699	.040	.316
3.79	.446	-2.884	.037	.331
2.75	.325	-2.126	.034	.335
1.74	.203	-1.351	.033	.322
1.21	.139	-.917	.033	.319
.72	.079	-.519	.034	.318
.21	.024	-.161	.035	.325
-.29	-.031	.210	.035	.316
-.82	-.091	.594	.035	.307
-1.32	-.148	.975	.035	.311
-1.83	-.211	1.395	.034	.314
-2.37	-.274	1.805	.033	.312
-3.33	-.384	2.493	.031	.316
-4.34	-.509	3.277	.029	.321

Table 27. Aerodynamic Coefficients for Configuration B1T7X4

M = .80 Q = 5.700 RN = .3810

ALP	CN	CM	CAB	CAF
-4.27	-.700	5.819	.300	.337
-3.20	-.503	4.150	.288	.340
-3.12	-.306	2.501	.264	.359
-2.12	-.304	2.491	.266	.349
-1.05	-.113	.872	.255	.357
.02	.089	-.820	.251	.369
1.09	.283	-2.446	.252	.370
2.16	.472	-4.045	.263	.376
3.23	.661	-5.645	.284	.371
4.31	.858	-7.294	.313	.357
6.47	1.275	-10.750	.357	.329
-4.27	-.700	5.808	.311	.348

M = .90 Q = 6.320 RN = .4010

ALP	CN	CM	CAB	CAF
-4.32	-.755	6.342	.242	.413
-3.23	-.936	4.503	.220	.426
-2.15	-.331	2.748	.199	.433
-1.06	-.132	1.095	.186	.435
.02	.068	-.615	.176	.441
1.11	.263	-2.239	.180	.453
2.19	.448	-3.877	.194	.450
3.27	.667	-5.640	.217	.438
4.36	.889	-7.552	.242	.418
6.55	1.357	-11.529	.309	.376
-4.32	-.769	6.496	.244	.418

M = .95 Q = 6.750 RN = .4090

ALP	CN	CM	CAB	CAF
-4.34	-.901	7.894	.406	.482
-3.24	-.663	5.861	.403	.470
-2.15	-.445	3.971	.397	.487
-1.06	-.171	1.519	.384	.505
.03	.066	-.557	.361	.512
1.12	.295	-2.569	.381	.518
2.21	.551	-4.835	.381	.506
3.29	.769	-6.732	.402	.479
4.39	1.017	-8.884	.423	.454
6.58	1.538	-13.460	.425	.430
-4.33	-.889	7.794	.397	.478

M = 1.00 Q = 7.090 RN = .4190

ALP	CN	CM	CAB	CAF
-4.35	-.887	7.771	.545	.537
-3.25	-.659	5.830	.536	.539
-2.16	-.436	3.897	.546	.561
-1.06	-.189	1.729	.550	.558
.03	.039	-.284	.539	.555
1.12	.272	-2.309	.534	.572
2.21	.481	-4.097	.542	.549
3.31	.730	-6.277	.532	.561
4.41	.985	-8.539	.533	.550
6.61	1.443	-12.428	.544	.528
-4.34	-.880	7.729	.542	.542

M = 1.05 Q = 7.460 RN = .4220

ALP	CN	CM	CAB	CAF
-4.36	-.772	6.573	.495	.576
-3.26	-.549	4.632	.487	.579
-2.16	-.333	2.800	.484	.581
-1.07	-.135	1.131	.479	.584
.03	.061	-.314	.481	.586
1.12	.247	-2.077	.480	.590
2.22	.457	-3.842	.480	.590
3.32	.690	-5.850	.486	.589
4.42	.923	-7.877	.488	.586
6.61	.911	-7.700	.487	.584
8.83	1.399	-11.551	.500	.569
-4.36	-.778	6.618	.494	.572

M = 1.10 Q = 7.700 RN = .4230

ALP	CN	CM	CAB	CAF
-4.38	-.811	6.948	.413	.560
-3.27	-.583	4.999	.402	.567
-2.17	-.358	3.064	.396	.570
-1.07	-.152	1.303	.393	.571
.03	.059	-.480	.395	.572
1.13	.262	-2.204	.395	.578
2.24	.489	-4.128	.398	.582
3.34	.706	-5.995	.402	.583
4.44	.924	-7.872	.408	.576
6.66	1.385	-11.797	.440	.567
-4.38	-.811	6.952	.415	.565

M = 1.20 Q = 8.190 RN = .4320

ALP	CN	CM	CAB	CAF
-4.39	-.799	6.874	.260	.544
-3.28	-.594	5.118	.254	.550
-2.17	-.375	3.270	.247	.548
-1.07	-.168	1.508	.244	.546
.04	.049	-.356	.243	.543
1.14	.262	-2.172	.244	.548
2.25	.474	-3.980	.247	.556
3.36	.689	-5.798	.253	.553
4.47	.903	-7.600	.263	.550
6.71	1.348	-11.328	.293	.552
-4.39	-.809	6.942	.265	.549

M = 1.30 Q = 8.400 RN = .4160

ALP	CN	CM	CAB	CAF
-4.43	-.812	6.954	.182	.512
-3.31	-.590	5.073	.170	.519
-2.19	-.347	3.176	.162	.521
-1.06	-.141	1.263	.163	.519
.05	.072	-.570	.159	.524
1.17	.288	-2.393	.166	.518
2.29	.503	-4.220	.177	.506
3.41	.727	-6.114	.189	.508
4.53	.955	-8.041	.199	.510
6.79	1.395	-11.695	.234	.509
.05	.060	-.452	.159	.530

M = 1.50 Q = 8.560 RN = .3860

ALP	CN	CM	CAB	CAF
-4.44	-.823	7.042	.129	.481
-3.31	-.590	5.070	.126	.485
-2.19	-.375	3.221	.122	.489
-1.07	-.150	1.336	.122	.475
.04	.068	-.594	.120	.476
1.16	.284	-2.397	.116	.494
2.28	.512	-4.339	.124	.498
3.41	.741	-6.260	.133	.498
4.54	.987	-8.151	.137	.499
6.83	1.435	-11.073	.151	.504
1.16	.285	-2.488	.117	.501

M = 1.75 Q = 6.200 RN = .3500

ALP	CN	CM	CAB	CAF
8.91	1.600	-12.956	.127	.450
7.79	1.384	-11.310	.126	.438
6.68	1.167	-9.591	.122	.429
5.57	.960	-7.929	.118	.422
4.47	.758	-6.276	.115	.416
3.37	.561	-4.642	.111	.413
2.29	.376	-3.116	.104	.406
1.71	.283	-2.339	.099	.409
1.17	.192	-1.593	.099	.409
.62	.100	-.836	.098	.408
.07	.014	-.121	.099	.402
-.47	-.074	.622	.099	.399
-1.01	-.168	1.392	.100	.393
-1.54	-.254	2.111	.103	.395
-2.08	-.345	2.858	.104	.396
-3.16	-.528	4.363	.106	.395
-4.25	-.723	5.969	.110	.392

M = 2.50 Q = 5.850 RN = .3500

ALP	CN	CM	CAB	CAF
8.68	1.340	-9.827	.095	.403
7.56	1.145	-8.507	.096	.391
6.45	.959	-7.190	.093	.394
5.36	.784	-5.923	.087	.383
4.28	.616	-4.686	.080	.374
3.19	.457	-3.493	.073	.376
2.12	.302	-2.324	.069	.372
1.56	.220	-1.693	.066	.374
1.03	.145	-1.122	.064	.373
.48	.069	-.534	.063	.373
-.03	-.005	.045	.062	.372
-.59	-.085	.658	.062	.373
-1.13	-.157	1.212	.062	.373
-1.63	-.231	1.780	.062	.374
-2.17	-.307	2.359	.063	.373
-3.23	-.459	3.503	.065	.374
-4.29	-.621	4.714	.068	.377

M = 3.00 Q = 4.130 RN = .3100

ALP	CN	CM	CAB	CAF
8.46	1.237	-8.624	.081	.379
7.38	1.055	-7.478	.081	.371
6.28	.881	-6.326	.079	.375
5.21	.716	-5.190	.077	.352
4.13	.559	-4.074	.073	.346
3.07	.409	-2.998	.068	.344
2.00	.264	-1.940	.064	.349
1.45	.190	-1.398	.061	.348
.91	.118	-.872	.058	.349
.40	.054	-.401	.057	.352
-.14	-.018	.136	.056	.349
-.66	-.086	.634	.056	.352
-1.20	-.159	1.173	.055	.361
-1.73	-.222	1.640	.055	.348
-2.24	-.293	2.154	.056	.350
-3.29	-.431	3.163	.057	.353
-4.34	-.579	4.226	.058	.347

Table 28. Aerodynamic Coefficients for Configuration B1T8X1

M = 1.75 Q = 6.200 RN = .3600

ALP	CN	CM	CAB	CAF
6.15	.905	-6.026	.182	.721
5.13	.819	-5.704	.177	.725
4.08	.665	-4.915	.175	.733
3.02	.476	-3.943	.177	.728
1.98	.311	-2.194	.178	.731
1.42	.221	-1.595	.179	.731
.91	.141	-.994	.180	.733
.37	.050	-.412	.180	.730
-.14	-.021	.153	.179	.729
-.68	-.106	.767	.179	.728
-1.19	-.187	1.313	.178	.729
-1.73	-.270	1.896	.178	.727
-2.26	-.353	2.460	.178	.729
-3.27	-.513	3.562	.178	.725
-4.32	-.682	4.758	.177	.720

M = 2.00 Q = 5.850 RN = .3400

ALP	CN	CM	CAB	CAF
6.10	.923	-6.219	.160	.661
5.06	.757	-5.124	.161	.657
4.01	.591	-4.084	.158	.661
2.95	.431	-2.925	.159	.661
1.90	.279	-1.892	.160	.662
1.36	.194	-1.318	.160	.677
.83	.119	-.812	.160	.670
.30	.044	-.302	.160	.667
-.19	-.028	.192	.160	.661
-.75	-.108	.737	.160	.664
-1.25	-.184	1.253	.160	.664
-1.78	-.261	1.773	.159	.660
-2.29	-.335	2.272	.159	.665
-3.32	-.486	3.289	.159	.659
-4.37	-.650	4.393	.159	.662

M = 2.50 Q = 4.930 RN = .3200

ALP	CN	CM	CAB	CAF
6.09	.891	-5.834	.156	.529
5.06	.733	-4.828	.154	.545
4.03	.575	-3.792	.153	.551
2.98	.420	-2.770	.156	.573
1.93	.273	-1.810	.163	.569
1.39	.192	-1.273	.168	.567
.88	.122	-.807	.171	.572
.36	.052	-.346	.173	.567
-.13	-.018	.118	.173	.564
-.67	-.094	.627	.174	.572
-1.18	-.165	1.099	.174	.558
-1.73	-.242	1.601	.174	.564
-2.24	-.314	2.075	.172	.560
-3.24	-.457	3.006	.167	.553
-4.29	-.611	4.010	.159	.546

M = 3.00 Q = 4.130 RN = .3100

ALP	CN	CM	CAB	CAF
5.93	.857	-5.533	.114	.491
4.91	.701	-4.544	.114	.498
3.87	.547	-3.554	.114	.498
2.84	.397	-2.595	.115	.509
1.79	.251	-1.646	.117	.512
1.25	.172	-1.126	.118	.495
.75	.102	-.670	.119	.505
.21	.030	-.205	.119	.505
-.29	-.040	.264	.119	.501
-.81	-.112	.739	.119	.495
-1.31	-.182	1.193	.119	.503
-1.83	-.255	1.674	.120	.496
-2.34	-.325	2.130	.120	.492
-3.36	-.468	3.051	.119	.491
-4.38	-.616	4.007	.117	.493

M = 4.00 Q = 2.340 RN = .2500

ALP	CN	CM	CAB	CAF
5.88	.815	-5.150	.065	.423
4.87	.655	-4.147	.065	.406
3.86	.511	-3.240	.065	.415
2.83	.371	-2.301	.065	.407
1.81	.234	-1.404	.065	.409
1.27	.160	-1.024	.065	.414
.77	.099	-.632	.065	.403
.26	.034	-.231	.065	.401
-.23	-.030	.190	.065	.405
-.76	-.098	.641	.065	.398
-1.26	-.160	1.024	.065	.409
-1.76	-.221	1.416	.065	.409
-2.25	-.295	1.806	.065	.445
-3.27	-.423	2.608	.065	.410
-4.28	-.564	3.572	.065	.400

M = 4.50 Q = 2.450 RN = .3200

ALP	CN	CM	CAB	CAF
5.82	.790	-4.981	.045	.411
4.81	.636	-4.014	.045	.419
3.79	.485	-3.069	.045	.425
2.79	.353	-2.237	.045	.422
1.75	.218	-1.388	.045	.415
1.22	.152	-.974	.045	.413
.71	.089	-.578	.044	.410
.20	.024	-.184	.044	.415
-.29	-.037	.246	.044	.412
-.81	-.099	.643	.044	.419
-1.32	-.161	1.022	.044	.416
-1.83	-.224	1.413	.044	.420
-2.35	-.292	1.840	.044	.411
-3.33	-.419	2.637	.044	.419
-4.34	-.559	3.517	.044	.437

Table 29. Aerodynamic Coefficients for Configuration B1T8X2

M = 1.75 Q = 6.200 RN = .3600

ALP	CN	CM	CAB	CAF
6.13	1.063	-7.904	.240	.713
5.11	.083	-6.063	.234	.699
4.07	.049	-5.208	.229	.689
3.01	.917	-3.930	.225	.702
1.96	.339	-2.599	.211	.717
1.42	.242	-1.847	.210	.724
.88	.191	-1.192	.213	.727
.37	.064	-.492	.216	.728
-.14	-.024	.192	.217	.734
-.67	-.116	.883	.214	.725
-1.18	-.202	1.540	.209	.725
-1.70	-.288	2.186	.205	.729
-2.22	-.380	2.897	.202	.722
-3.24	-.554	4.202	.206	.717
-4.29	-.730	5.502	.213	.715

M = 2.00 Q = 5.850 RN = .3400

ALP	CN	CM	CAB	CAF
6.03	1.022	-7.561	.199	.658
5.00	.847	-6.315	.197	.656
3.96	.668	-5.012	.197	.653
2.91	.489	-3.685	.201	.654
1.87	.313	-2.368	.211	.664
1.32	.217	-1.645	.221	.663
.81	.134	-1.013	.228	.664
.29	.049	-.374	.234	.665
-.22	-.035	.274	.236	.662
-.76	-.124	.941	.235	.663
-1.26	-.210	1.580	.226	.660
-1.79	-.298	2.237	.216	.658
-2.30	-.382	2.865	.210	.651
-3.33	-.552	4.118	.204	.650
-4.36	-.729	5.424	.202	.653

M = 2.50 Q = 4.930 RN = .3200

ALP	CN	CM	CAB	CAF
6.02	.966	-6.090	.150	.548
4.99	.790	-5.674	.150	.549
3.96	.620	-4.466	.157	.549
2.91	.454	-3.287	.158	.557
1.87	.291	-2.117	.157	.557
1.33	.204	-1.482	.156	.556
.82	.124	-.904	.155	.555
.29	.045	-.330	.156	.549
-.20	-.028	.210	.156	.551
-.73	-.113	.828	.155	.552
-1.25	-.192	1.391	.156	.577
-1.76	-.271	1.960	.157	.552
-2.28	-.351	2.538	.158	.557
-3.28	-.506	3.642	.159	.559
-4.32	-.675	4.840	.160	.550

M = 3.00 Q = 4.130 RN = .3100

ALP	CN	CM	CAB	CAF
5.86	.886	-6.076	.108	.494
4.86	.719	-4.969	.108	.493
3.83	.561	-3.880	.107	.497
2.81	.406	-2.820	.105	.497
1.77	.256	-1.788	.104	.502
1.23	.177	-1.229	.103	.497
.71	.101	-.706	.102	.502
.20	.028	-.203	.102	.493
-.31	-.044	.306	.102	.500
-.83	-.120	.837	.102	.499
-1.34	-.192	1.338	.102	.500
-1.85	-.263	1.831	.103	.501
-2.38	-.339	2.360	.104	.492
-3.37	-.484	3.346	.104	.499
-4.40	-.640	4.423	.105	.499

M = 4.00 Q = 2.340 RN = .2900

ALP	CN	CM	CAB	CAF
5.81	.009	-5.320	.060	.424
4.80	.051	-4.292	.060	.420
3.79	.904	-3.391	.060	.422
2.77	.362	-2.410	.060	.417
1.75	.228	-1.531	.059	.435
1.22	.154	-1.031	.059	.427
.72	.092	-.624	.059	.419
.19	.025	-.175	.060	.421
-.30	-.039	.269	.060	.413
-.80	-.101	.685	.060	.413
-1.33	-.169	1.119	.060	.413
-1.83	-.234	1.544	.060	.422
-2.34	-.304	2.007	.059	.424
-3.33	-.432	2.840	.059	.443
-4.34	-.572	3.767	.059	.440

M = 4.50 Q = 2.450 RN = .3200

ALP	CN	CM	CAB	CAF
5.09	.797	-5.217	.044	.418
4.09	.646	-4.226	.045	.419
3.08	.500	-3.278	.044	.428
2.04	.363	-2.306	.044	.425
1.02	.229	-1.523	.044	.418
1.28	.157	-1.032	.044	.425
.00	.008	-.652	.044	.417
.27	.034	-.233	.045	.433
-.21	-.026	.178	.045	.409
-.74	-.091	.611	.046	.415
-1.25	-.153	1.018	.045	.411
-1.73	-.216	1.433	.045	.408
-2.25	-.284	1.893	.044	.422
-3.25	-.412	2.703	.044	.426
-4.27	-.554	3.625	.044	.426

Table 30. Aerodynamic Coefficients for Configuration B1T8X3

M = 1.75 Q = 6.200 RN = .3400

ALP	CN	CM	CAB	CAF
6.10	1.102	-9.559	.251	.734
5.16	.901	-7.979	.240	.723
4.12	.777	-6.350	.252	.726
3.07	.576	-4.720	.255	.703
2.03	.383	-3.151	.253	.735
1.49	.278	-2.200	.249	.706
.97	.102	-1.501	.248	.733
.46	.005	-.704	.249	.746
-.06	-.011	.096	.249	.730
-.57	-.107	.883	.250	.734
-1.10	-.206	1.690	.252	.725
-1.61	-.301	2.446	.254	.726
-2.15	-.398	3.257	.259	.720
-3.13	-.584	4.707	.264	.715
-4.17	-.780	6.301	.266	.729

M = 2.00 Q = 5.050 RN = .3400

ALP	CN	CM	CAB	CAF
6.01	1.062	-8.300	.204	.695
4.98	.871	-6.905	.202	.695
3.95	.694	-5.517	.199	.668
2.91	.507	-4.042	.198	.664
1.86	.324	-2.600	.197	.664
1.33	.229	-1.828	.197	.670
.83	.141	-1.127	.196	.665
.28	.050	-.398	.194	.671
-.21	-.035	.202	.194	.672
-.73	-.124	.998	.196	.667
-1.24	-.213	1.792	.198	.672
-1.77	-.305	2.425	.199	.664
-2.30	-.394	3.141	.200	.658
-3.31	-.568	4.497	.201	.660
-4.33	-.754	5.949	.202	.660

M = 2.50 Q = 4.930 RN = .3200

ALP	CN	CM	CAB	CAF
6.00	.961	-7.174	.135	.553
4.98	.791	-5.942	.133	.558
3.95	.617	-4.657	.131	.552
2.91	.450	-3.411	.129	.554
1.87	.289	-2.200	.129	.563
1.33	.203	-1.561	.128	.551
.83	.125	-.950	.127	.556
.30	.046	-.351	.127	.560
-.21	-.031	.239	.127	.564
-.72	-.110	.832	.128	.570
-1.24	-.190	1.430	.129	.560
-1.74	-.266	2.015	.129	.557
-2.26	-.347	2.618	.130	.550
-3.26	-.502	3.767	.130	.550
-4.30	-.670	5.022	.131	.552

M = 3.00 Q = 4.130 RN = .3100

ALP	CN	CM	CAB	CAF
5.90	.889	-6.342	.102	.499
4.90	.727	-5.218	.102	.494
3.86	.566	-4.085	.100	.509
2.83	.408	-2.951	.099	.508
1.81	.259	-1.877	.097	.502
1.25	.177	-1.278	.097	.503
.76	.107	-.787	.096	.495
.24	.034	-.250	.095	.506
-.26	-.037	.275	.095	.500
-.78	-.111	.810	.095	.506
-1.29	-.186	1.349	.095	.500
-1.81	-.258	1.869	.096	.501
-2.31	-.329	2.387	.096	.498
-3.33	-.477	3.434	.097	.503
-4.34	-.629	4.527	.097	.505

M = 4.00 Q = 2.340 RN = .2500

ALP	CN	CM	CAB	CAF
5.85	.812	-5.531	.064	.433
4.85	.655	-4.483	.064	.425
3.83	.500	-3.400	.064	.418
2.81	.370	-2.563	.064	.432
1.78	.235	-1.651	.065	.409
1.26	.160	-1.127	.065	.440
.76	.095	-.672	.065	.415
.24	.030	-.200	.065	.415
-.26	-.033	.242	.066	.414
-.77	-.097	.678	.066	.414
-1.27	-.162	1.123	.066	.418
-1.79	-.232	1.605	.066	.408
-2.28	-.298	2.045	.066	.437
-3.28	-.426	2.925	.066	.422
-4.29	-.566	3.874	.066	.426

M = 4.50 Q = 2.490 RN = .3200

ALP	CN	CM	CAB	CAF
5.85	.797	-5.397	.049	.418
4.84	.640	-4.347	.049	.418
3.83	.491	-3.358	.049	.405
2.81	.350	-2.461	.049	.395
1.79	.225	-1.568	.049	.404
1.26	.158	-1.084	.049	.420
.75	.091	-.632	.049	.415
.23	.030	-.211	.049	.396
-.24	-.030	.218	.049	.412
-.78	-.095	.666	.049	.425
-1.28	-.158	1.081	.049	.418
-1.78	-.222	1.525	.049	.411
-2.28	-.290	1.985	.049	.425
-3.29	-.417	2.830	.049	.426
-4.30	-.557	3.770	.049	.426

Table 31. Aerodynamic Coefficients for Configuration B1T8SX1

M = 1.75 Q = 6.200 RN = .3600

ALP	CN	CM	CAB	CAF
6.24	1.219	-8.825	.181	.648
5.19	1.016	-7.392	.175	.636
4.14	.808	-5.900	.170	.650
3.07	.602	-4.412	.166	.654
2.02	.392	-2.885	.164	.657
1.46	.283	-2.078	.162	.655
.95	.181	-1.329	.162	.657
.42	.079	-.583	.162	.664
-.12	-.022	.167	.163	.655
-.63	-.122	.895	.164	.659
-1.17	-.224	1.646	.165	.657
-1.70	-.329	2.412	.166	.663
-2.21	-.430	3.156	.166	.655
-3.25	-.632	4.613	.166	.657
-4.31	-.839	6.115	.166	.663

M = 2.00 Q = 5.850 RN = .3400

ALP	CN	CM	CAB	CAF
6.17	1.158	-8.265	.175	.585
5.12	.960	-6.889	.169	.589
4.08	.757	-5.454	.161	.586
3.02	.557	-4.023	.158	.582
1.95	.360	-2.609	.157	.592
1.41	.254	-1.834	.154	.584
.90	.161	-1.158	.151	.589
.36	.066	-.473	.148	.593
-.15	-.028	.206	.146	.605
-.69	-.124	.891	.146	.600
-1.22	-.221	1.590	.147	.602
-1.73	-.316	2.280	.148	.598
-2.26	-.414	2.991	.149	.602
-3.30	-.606	4.345	.151	.595
-4.34	-.807	5.787	.154	.594

M = 2.50 Q = 4.930 RN = .3200

ALP	CN	CM	CAB	CAF
6.11	1.073	-7.447	.157	.469
5.09	.888	-6.201	.157	.481
4.04	.696	-4.882	.153	.473
3.01	.512	-3.603	.147	.468
1.95	.329	-2.326	.134	.479
1.41	.235	-1.657	.127	.483
.87	.145	-1.019	.124	.491
.36	.060	-.427	.123	.488
-.16	-.027	.193	.123	.486
-.67	-.111	.780	.122	.494
-1.19	-.202	1.418	.123	.503
-1.72	-.291	2.045	.124	.487
-2.25	-.379	2.658	.125	.483
-3.25	-.550	3.834	.129	.485
-4.28	-.735	5.117	.139	.494

M = 3.00 Q = 4.130 RN = .3100

ALP	CN	CM	CAB	CAF
5.98	.984	-6.607	.122	.427
4.97	.804	-5.451	.122	.435
3.93	.628	-4.257	.122	.438
2.88	.460	-3.122	.124	.440
1.84	.290	-1.975	.127	.441
1.30	.204	-1.384	.129	.436
.79	.121	-.824	.129	.417
.26	.043	-.299	.130	.430
-.24	-.036	.245	.130	.419
-.76	-.120	.820	.131	.427
-1.27	-.197	1.340	.131	.436
-1.80	-.281	1.905	.131	.432
-2.32	-.365	2.475	.131	.425
-3.32	-.522	3.531	.131	.430
-4.35	-.693	4.684	.131	.419

M = 4.00 Q = 2.340 RN = .2500

ALP	CN	CM	CAB	CAF
5.86	.889	-5.808	.067	.395
4.86	.715	-4.679	.068	.381
3.84	.554	-3.628	.067	.379
2.81	.401	-2.632	.067	.376
1.79	.250	-1.644	.067	.376
1.26	.172	-1.162	.067	.357
1.26	.173	-1.146	.067	.378
.76	.106	-.703	.066	.378
-.27	-.037	.253	.066	.354
-.78	-.108	.724	.066	.344
-1.28	-.179	1.176	.067	.365
-1.78	-.247	1.615	.067	.367
-2.29	-.318	2.076	.067	.359
-3.28	-.463	3.022	.067	.373
-4.30	-.621	4.055	.067	.374

M = 4.50 Q = 2.450 RN = .3200

ALP	CN	CM	CAB	CAF
5.88	.859	-5.575	.047	.372
4.85	.690	-4.488	.047	.358
3.84	.529	-3.435	.047	.361
2.82	.379	-2.461	.047	.370
1.79	.238	-1.545	.046	.368
1.25	.166	-1.082	.046	.361
.75	.101	-.663	.046	.351
.24	.032	-.218	.046	.351
-.26	-.035	.236	.046	.369
-.76	-.100	.660	.046	.353
-1.27	-.168	1.092	.046	.353
-1.80	-.238	1.546	.046	.350
-2.30	-.322	2.087	.045	.350
-3.29	-.449	2.908	.045	.357
-4.31	-.599	3.886	.045	.358

Table 32. Aerodynamic Coefficients for Configuration B1T8SX2

M = 1.75 Q = 6.200 RN = .3600

ALP	CN	CM	CAB	CAF
6.22	1.301	-10.118	.227	.630
5.17	1.085	-8.502	.220	.623
4.13	.865	-6.807	.209	.628
3.07	.645	-5.095	.193	.647
2.03	.425	-3.382	.181	.653
1.47	.307	-2.427	.177	.657
.96	.198	-1.572	.177	.656
.43	.089	-.711	.177	.672
-.10	-.019	.157	.177	.655
-.61	-.127	1.006	.177	.660
-1.13	-.237	1.874	.178	.661
-1.66	-.350	2.768	.178	.662
-2.19	-.462	3.647	.179	.657
-3.20	-.672	5.277	.184	.658
-4.25	-.893	6.996	.190	.659

M = 2.00 Q = 5.850 RN = .3400

ALP	CN	CM	CAB	CAF
6.12	1.217	-9.324	.208	.555
5.08	.994	-7.674	.201	.549
4.05	.798	-6.172	.195	.545
2.99	.586	-4.547	.174	.567
1.94	.381	-2.965	.154	.588
1.39	.268	-2.087	.149	.582
.88	.167	-1.296	.149	.582
.34	.066	-.512	.149	.582
-.15	-.028	.224	.149	.582
-.68	-.132	1.020	.149	.585
-1.21	-.233	1.807	.150	.592
-1.72	-.335	2.595	.151	.586
-2.24	-.435	3.369	.152	.590
-3.27	-.636	4.906	.160	.586
-4.31	-.848	6.526	.182	.572

M = 2.50 Q = 4.930 RN = .3200

ALP	CN	CM	CAB	CAF
6.07	1.091	-8.007	.165	.489
5.06	.899	-6.641	.166	.504
4.00	.702	-5.213	.169	.488
2.96	.517	-3.846	.170	.483
1.92	.330	-2.478	.169	.495
1.37	.233	-1.738	.169	.491
.87	.148	-1.102	.169	.497
.36	.058	-.431	.169	.490
-.17	-.029	.221	.169	.485
-.70	-.118	.875	.169	.489
-1.21	-.208	1.541	.169	.485
-1.72	-.295	2.192	.170	.487
-2.24	-.385	2.847	.170	.491
-3.26	-.561	4.140	.170	.489
-4.28	-.749	5.520	.171	.487

M = 3.00 Q = 4.130 RN = .3100

ALP	CN	CM	CAB	CAF
5.95	.972	-6.841	.108	.436
4.92	.799	-5.665	.107	.434
3.89	.621	-4.412	.106	.431
2.85	.450	-3.198	.105	.431
1.82	.282	-2.013	.104	.435
1.28	.199	-1.406	.104	.439
.77	.117	-.840	.103	.435
.25	.039	-.281	.103	.439
-.25	-.039	.282	.103	.429
-.78	-.120	.857	.103	.439
-1.28	-.199	1.421	.103	.436
-1.82	-.283	2.014	.103	.437
-2.32	-.364	2.585	.103	.444
-3.32	-.522	3.697	.104	.437
-4.35	-.692	4.898	.105	.442

M = 4.00 Q = 2.340 RN = .2900

ALP	CN	CM	CAB	CAF
5.85	.874	-5.887	.060	.373
4.85	.709	-4.793	.060	.379
3.83	.548	-3.722	.060	.376
2.81	.394	-2.696	.060	.362
1.81	.257	-1.724	.059	.371
1.26	.173	-1.178	.059	.369
.75	.102	-.706	.059	.357
.25	.035	-.238	.059	.356
-.27	-.037	.257	.059	.356
-.77	-.105	.725	.060	.365
-1.27	-.174	1.188	.060	.353
-1.79	-.246	1.678	.059	.375
-2.30	-.319	2.173	.059	.365
-3.28	-.455	3.080	.058	.362
-4.30	-.610	4.120	.058	.369

M = 4.50 Q = 2.450 RN = .3200

ALP	CN	CM	CAB	CAF
5.92	.860	-5.769	.045	.371
4.92	.694	-4.672	.045	.363
3.91	.539	-3.634	.045	.370
2.90	.392	-2.650	.044	.365
1.86	.249	-1.691	.044	.356
1.34	.177	-1.195	.044	.356
.82	.108	-.745	.045	.355
.33	.043	-.298	.046	.347
-.18	-.024	.180	.046	.344
-.71	-.092	.635	.046	.344
-1.21	-.159	1.081	.046	.362
-1.72	-.226	1.533	.045	.346
-2.22	-.298	2.028	.045	.344
-3.22	-.442	2.981	.045	.362
-4.23	-.590	3.966	.044	.373

Table 33. Aerodynamic Coefficients for Configuration B1T8SX3

M = 1.75 Q = 6.200 RN = .3600

ALP	CN	CM	CAB	CAF
6.29	1.339	-10.990	.276	.663
5.26	1.117	-9.219	.279	.668
4.22	.894	-7.408	.282	.665
3.18	.671	-5.575	.282	.660
2.13	.451	-3.792	.284	.665
1.60	.336	-2.770	.286	.662
1.08	.223	-1.853	.288	.663
.55	.115	-.958	.287	.661
.04	.008	-.071	.287	.661
-.48	-.099	.825	.286	.664
-.98	-.206	1.714	.285	.661
-1.51	-.318	2.643	.285	.662
-2.02	-.426	3.562	.284	.664
-3.04	-.640	5.284	.283	.661
-4.08	-.863	7.111	.281	.661

M = 2.00 Q = 5.850 RN = .3400

ALP	CN	CM	CAB	CAF
6.06	1.198	-9.599	.204	.598
5.06	.993	-8.016	.205	.597
4.02	.782	-6.334	.206	.598
2.97	.575	-4.670	.205	.600
1.93	.371	-3.022	.204	.598
1.39	.263	-2.139	.204	.595
.88	.166	-1.342	.203	.604
.34	.064	-.522	.202	.601
-.15	-.027	.225	.202	.600
-.67	-.126	1.024	.202	.606
-1.19	-.225	1.821	.202	.594
-1.71	-.327	2.644	.202	.598
-2.23	-.427	3.457	.202	.601
-3.25	-.623	5.015	.203	.598
-4.28	-.832	6.688	.202	.602

M = 2.50 Q = 4.930 RN = .3200

ALP	CN	CM	CAB	CAF
6.04	1.081	-8.283	.131	.487
5.02	.874	-6.722	.129	.486
3.99	.687	-5.306	.127	.491
2.95	.504	-3.900	.125	.495
1.91	.323	-2.509	.124	.511
1.38	.230	-1.776	.124	.482
.85	.142	-1.101	.124	.474
.35	.060	-.461	.124	.490
-.16	-.028	.218	.124	.485
-.69	-.114	.881	.124	.486
-1.19	-.200	1.541	.124	.485
-1.71	-.287	2.211	.124	.488
-2.22	-.372	2.868	.124	.487
-3.23	-.546	4.188	.124	.493
-4.27	-.731	5.596	.126	.495

M = 3.00 Q = 4.130 RN = .3100

ALP	CN	CM	CAB	CAF
5.95	.966	-7.030	.101	.433
4.93	.788	-5.799	.101	.432
3.92	.612	-4.520	.099	.432
2.87	.449	-3.316	.097	.430
1.84	.284	-2.104	.095	.436
1.29	.197	-1.451	.094	.431
.79	.120	-.891	.093	.427
.26	.040	-.300	.092	.442
-.22	-.033	.250	.092	.433
-.74	-.113	.844	.092	.446
-1.26	-.193	1.431	.093	.431
-1.78	-.272	2.009	.093	.432
-2.27	-.349	2.580	.093	.424
-3.28	-.506	3.715	.094	.443
-4.31	-.674	4.948	.095	.437

M = 4.00 Q = 2.340 RN = .2500

ALP	CN	CM	CAB	CAF
5.87	.874	-6.081	.066	.364
4.87	.705	-4.949	.066	.377
3.86	.546	-3.852	.066	.377
2.83	.394	-2.805	.066	.374
1.81	.253	-1.803	.066	.366
1.28	.173	-1.232	.066	.371
.78	.105	-.749	.066	.352
.27	.038	-.276	.066	.361
-.24	-.033	.236	.066	.349
-.74	-.101	.727	.066	.351
-1.25	-.170	1.204	.066	.356
-1.76	-.240	1.701	.067	.365
-2.26	-.311	2.197	.066	.358
-3.26	-.451	3.156	.066	.357
-4.27	-.600	4.189	.066	.361

M = 4.50 Q = 2.450 RN = .3200

ALP	CN	CM	CAB	CAF
5.85	.843	-5.843	.050	.366
4.85	.681	-4.743	.050	.363
3.83	.526	-3.668	.050	.367
2.81	.382	-2.677	.050	.366
1.80	.240	-1.694	.050	.352
1.25	.163	-1.145	.049	.364
.75	.097	-.693	.049	.353
.24	.032	-.227	.050	.347
-.24	-.031	.225	.050	.361
-.76	-.100	.708	.050	.395
-1.28	-.168	1.182	.049	.350
-1.79	-.236	1.656	.049	.402
-2.27	-.303	2.117	.049	.363
-3.28	-.442	3.073	.049	.358
-4.28	-.586	4.074	.049	.364

Table 34. Aerodynamic Coefficients for Configuration B1T10X1

M = 1.75 Q = 6.200 RN = .3600

ALP	CN	CM	CAB	CAF
6.26	1.580	-11.903	.191	.718
5.20	1.298	-9.813	.187	.793
4.15	1.018	-7.690	.184	.736
3.07	.748	-5.651	.186	.737
2.00	.483	-3.662	.186	.735
1.44	.346	-2.608	.185	.739
.93	.221	-1.669	.183	.741
.39	.094	-.711	.182	.741
-.14	-.033	.257	.182	.738
-.68	-.164	1.237	.183	.743
-1.19	-.287	2.163	.183	.738
-1.74	-.416	3.138	.183	.742
-2.26	-.545	4.112	.182	.742
-3.31	-.799	6.006	.182	.740
-4.36	-1.067	8.027	.182	.719

M = 2.00 Q = 5.850 RN = .3400

ALP	CN	CM	CAB	CAF
6.22	1.432	-10.537	.221	.704
5.15	1.173	-8.657	.218	.694
4.10	.919	-6.782	.221	.700
3.04	.673	-4.966	.224	.692
1.97	.433	-3.209	.221	.689
1.41	.307	-2.263	.223	.689
.89	.196	-1.444	.223	.687
.36	.079	-.583	.223	.693
-.16	-.035	.262	.223	.685
-.71	-.156	1.149	.224	.682
-1.22	-.270	1.988	.224	.689
-1.76	-.390	2.866	.224	.683
-2.28	-.505	3.716	.225	.687
-3.33	-.739	5.426	.226	.689
-4.38	-.987	7.260	.224	.683

M = 2.50 Q = 4.930 RN = .3200

ALP	CN	CM	CAB	CAF
6.14	1.350	-9.806	.143	.607
5.11	1.110	-8.105	.139	.606
4.06	.874	-6.402	.135	.599
2.99	.641	-4.710	.133	.602
1.95	.419	-3.087	.130	.603
1.39	.296	-2.181	.128	.599
.87	.187	-1.373	.128	.608
.34	.076	-.560	.129	.605
-.16	-.035	.265	.129	.603
-.70	-.149	1.100	.129	.609
-1.22	-.262	1.917	.129	.604
-1.72	-.368	2.699	.129	.601
-2.27	-.483	3.537	.130	.603
-3.28	-.702	5.113	.133	.600
-4.33	-.932	6.781	.136	.593

M = 3.00 Q = 4.130 RN = .3100

ALP	CN	CM	CAB	CAF
6.03	1.237	-8.828	.097	.556
5.00	1.023	-7.336	.095	.558
3.97	.803	-5.786	.090	.553
2.92	.591	-4.271	.088	.559
1.88	.380	-2.761	.087	.556
1.33	.267	-1.936	.086	.566
.82	.162	-1.173	.085	.567
.29	.062	-.446	.084	.560
-.22	-.043	.314	.084	.555
-.74	-.150	1.085	.084	.563
-1.25	-.253	1.828	.085	.550
-1.77	-.356	2.570	.086	.562
-2.30	-.463	3.342	.086	.552
-3.30	-.663	4.770	.087	.553
-4.34	-.880	6.322	.087	.565

M = 4.00 Q = 2.340 RN = .2500

ALP	CN	CM	CAB	CAF
5.86	1.045	-7.166	.051	.510
4.86	.850	-5.846	.051	.490
3.84	.660	-4.547	.051	.507
2.81	.474	-3.277	.051	.499
1.80	.301	-2.089	.051	.516
1.26	.209	-1.465	.051	.489
.75	.129	-.904	.051	.493
.22	.041	-.299	.052	.488
-.27	-.048	.340	.052	.473
-.79	-.136	.960	.052	.471
-1.30	-.221	1.563	.052	.487
-1.79	-.303	2.098	.052	.482
-2.31	-.389	2.685	.052	.487
-3.30	-.559	3.855	.051	.485
-4.32	-.744	5.111	.051	.492

M = 4.50 Q = 2.450 RN = .3200

ALP	CN	CM	CAB	CAF
5.86	.995	-6.749	.039	.486
4.88	.808	-5.502	.039	.481
3.85	.630	-4.293	.039	.483
2.82	.455	-3.106	.039	.485
1.80	.287	-1.967	.038	.487
1.26	.200	-1.389	.039	.487
.77	.125	-.872	.039	.488
.25	.042	-.301	.040	.490
-.23	-.038	.278	.041	.473
-.76	-.124	.870	.041	.472
-1.27	-.204	1.414	.041	.474
-1.78	-.283	1.948	.041	.465
-2.27	-.357	2.429	.040	.472
-3.29	-.541	3.682	.039	.498
-4.30	-.704	4.781	.038	.499

Table 35. Aerodynamic Coefficients for Configuration B1T10X2

M = 1.75 Q = 6.200 RN = .3600

ALP	CN	CM	CAB	CAF
6.26	1.663	-13.406	.247	.740
5.23	1.374	-11.132	.239	.741
4.17	1.085	-8.791	.233	.744
3.12	.804	-6.518	.229	.722
2.06	.526	-4.275	.222	.751
1.50	.381	-3.079	.221	.738
.98	.250	-2.026	.220	.747
.46	.117	-.952	.218	.757
-.06	-.015	.123	.217	.741
-.61	-.156	1.270	.218	.741
-1.12	-.289	2.343	.219	.742
-1.65	-.425	3.450	.221	.741
-2.17	-.561	4.546	.222	.746
-3.20	-.829	6.687	.224	.746
-4.25	-1.112	8.980	.232	.744

M = 2.00 Q = 5.850 RN = .3400

ALP	CN	CM	CAB	CAF
6.12	1.553	-12.400	.184	.680
5.07	1.288	-10.350	.171	.678
4.02	1.019	-8.219	.160	.683
2.96	.749	-6.053	.154	.681
1.91	.483	-3.915	.155	.672
1.36	.339	-2.733	.154	.677
.86	.213	-1.726	.156	.667
.32	.081	-.655	.155	.669
-.19	-.046	.380	.152	.677
-.74	-.185	1.497	.151	.674
-1.24	-.311	2.514	.152	.676
-1.77	-.446	3.604	.153	.671
-2.31	-.579	4.672	.155	.672
-3.32	-.832	6.676	.158	.673
-4.37	-1.100	8.799	.164	.668

M = 2.50 Q = 4.930 RN = .3200

ALP	CN	CM	CAB	CAF
6.07	1.423	-11.100	.120	.593
5.04	1.182	-9.283	.117	.597
4.00	.929	-7.324	.111	.601
2.94	.680	-5.377	.107	.597
1.90	.440	-3.493	.104	.607
1.36	.311	-2.464	.103	.609
.84	.192	-1.522	.102	.607
.33	.077	-.605	.101	.610
-.18	-.040	.325	.102	.599
-.73	-.167	1.322	.102	.612
-1.23	-.282	2.229	.103	.608
-1.75	-.402	3.169	.104	.602
-2.28	-.520	4.105	.105	.594
-3.29	-.751	5.883	.105	.607
-4.34	-.996	7.793	.108	.604

M = 3.00 Q = 4.130 RN = .3100

ALP	CN	CM	CAB	CAF
6.00	1.250	-9.384	.085	.555
4.97	1.027	-7.768	.084	.554
3.95	.810	-6.154	.082	.554
2.89	.595	-4.537	.080	.561
1.87	.384	-2.945	.080	.556
1.34	.271	-2.073	.080	.559
.82	.163	-1.249	.080	.555
.28	.058	-.449	.080	.553
-.23	-.044	.338	.081	.555
-.72	-.147	1.128	.081	.568
-1.24	-.254	1.928	.081	.557
-1.77	-.362	2.754	.081	.556
-2.28	-.466	3.547	.081	.553
-3.29	-.668	5.059	.081	.559
-4.32	-.887	6.708	.081	.546

M = 4.00 Q = 2.340 RN = .2500

ALP	CN	CM	CAB	CAF
5.90	1.059	-7.578	.058	.502
4.89	.863	-6.224	.057	.504
3.87	.677	-4.849	.058	.499
2.85	.487	-3.547	.059	.505
1.83	.308	-2.252	.060	.504
1.30	.218	-1.588	.061	.490
.83	.137	-1.008	.062	.499
.27	.048	-.358	.063	.489
-.21	-.038	.287	.064	.483
-.74	-.130	.950	.064	.485
-1.23	-.212	1.554	.065	.506
-1.76	-.296	2.152	.065	.491
-2.25	-.383	2.773	.065	.494
-3.26	-.560	4.034	.065	.491
-4.27	-.739	5.327	.064	.491

M = 4.50 Q = 2.450 RN = .3200

ALP	CN	CM	CAB	CAF
5.87	1.001	-7.077	.048	.464
4.89	.813	-5.792	.048	.494
3.86	.639	-4.557	.048	.489
2.83	.464	-3.331	.048	.477
1.82	.291	-2.096	.048	.482
1.29	.205	-1.466	.048	.484
.78	.125	-.913	.048	.482
.26	.043	-.323	.048	.472
-.22	-.038	.284	.048	.470
-.75	-.122	.896	.049	.469
-1.26	-.202	1.463	.048	.479
-1.76	-.278	1.999	.048	.476
-2.27	-.364	2.606	.048	.477
-3.27	-.531	3.778	.047	.490
-4.28	-.707	5.031	.047	.481

Table 36. Aerodynamic Coefficients for Configuration B1T10X3

M = 1.75 Q = 6.200 RN = .3600

ALP	CN	CM	CAB	CAF
6.24	1.800	-15.502	.171	.739
5.21	1.501	-13.005	.163	.747
4.17	1.197	-10.359	.155	.747
3.12	.887	-7.723	.148	.741
2.08	.588	-5.141	.142	.745
1.53	.432	-3.748	.139	.743
1.32	.286	-2.487	.139	.744
.49	.141	-1.230	.140	.743
-.03	-.008	.074	.140	.745
-.56	-.159	1.386	.142	.746
-1.06	-.302	2.631	.146	.739
-1.59	-.451	3.926	.147	.737
-2.10	-.599	5.199	.149	.737
-3.12	-.884	7.635	.153	.736
-4.16	-1.190	10.287	.160	.737

M = 2.00 Q = 5.850 RN = .3400

ALP	CN	CM	CAB	CAF
6.04	1.608	-13.594	.137	.694
5.01	1.328	-11.302	.131	.696
3.98	1.046	-8.924	.125	.696
2.92	.764	-6.537	.122	.691
1.89	.493	-4.234	.122	.690
1.33	.346	-2.949	.121	.690
.84	.216	-1.853	.119	.694
.30	.079	-.681	.119	.696
-.20	-.053	.456	.120	.693
-.74	-.192	1.645	.122	.692
-1.24	-.324	2.774	.124	.709
-1.77	-.461	3.945	.126	.686
-2.30	-.597	5.103	.128	.687
-3.30	-.856	7.274	.130	.695
-4.34	-1.137	9.653	.131	.688

M = 2.50 Q = 4.930 RN = .3200

ALP	CN	CM	CAB	CAF
6.00	1.406	-11.480	.110	.600
4.99	1.157	-9.513	.109	.591
3.95	.909	-7.501	.105	.593
2.90	.664	-5.495	.102	.595
1.88	.427	-3.544	.101	.594
1.33	.298	-2.468	.101	.604
.81	.184	-1.523	.100	.596
.30	.069	-.573	.099	.592
-.20	-.047	.389	.100	.593
-.74	-.168	1.389	.101	.595
-1.24	-.282	2.329	.102	.590
-1.76	-.398	3.292	.102	.587
-2.28	-.516	4.263	.102	.589
-3.28	-.743	6.091	.103	.597
-4.32	-.983	8.048	.105	.597

M = 3.00 Q = 4.130 RN = .3100

ALP	CN	CM	CAB	CAF
5.96	1.251	-9.834	.107	.566
4.94	1.031	-8.165	.107	.560
3.92	.805	-6.413	.105	.561
2.87	.593	-4.735	.103	.561
1.85	.380	-3.054	.102	.558
1.29	.263	-2.105	.101	.559
.77	.159	-1.260	.100	.563
.27	.055	-.445	.100	.554
-.23	-.046	.376	.100	.557
-.74	-.152	1.210	.099	.563
-1.26	-.259	2.068	.099	.555
-1.78	-.364	2.899	.099	.545
-2.29	-.470	3.747	.099	.553
-3.29	-.671	5.330	.100	.556
-4.32	-.890	7.044	.101	.562

M = 4.00 Q = 2.340 RN = .2500

ALP	CN	CM	CAB	CAF
5.88	1.055	-7.884	.065	.501
4.88	.872	-6.558	.065	.500
3.87	.682	-5.170	.065	.503
2.85	.497	-3.786	.066	.486
1.83	.313	-2.395	.066	.497
1.29	.216	-1.641	.066	.483
.79	.136	-1.050	.066	.485
.29	.050	-.384	.067	.478
-.21	-.038	.299	.067	.485
-.72	-.123	.947	.067	.489
-1.22	-.208	1.584	.067	.532
-1.75	-.297	2.258	.067	.482
-2.26	-.391	2.965	.067	.475
-3.24	-.561	4.239	.067	.469
-4.26	-.745	5.605	.067	.480

M = 4.50 Q = 2.450 RN = .3200

ALP	CN	CM	CAB	CAF
5.93	1.020	-7.509	.050	.491
4.89	.823	-6.116	.050	.496
3.88	.648	-4.844	.050	.493
2.86	.475	-3.574	.050	.487
1.85	.298	-2.260	.049	.507
1.31	.209	-1.571	.049	.476
.81	.128	-.971	.049	.492
.29	.048	-.362	.049	.480
-.20	-.034	.260	.049	.476
-.72	-.116	.878	.049	.481
-1.22	-.192	1.437	.049	.487
-1.73	-.278	2.077	.049	.497
-2.23	-.360	2.695	.049	.483
-3.23	-.535	3.977	.049	.499
-4.25	-.703	5.206	.049	.496

Table 37. Aerodynamic Coefficients for Configuration B1T11X1

M = 1.75 Q = 6.200 RN = .3600

ALP	CN	CM	CAB	CAF
6.11	1.095	-7.947	.210	.579
5.08	.897	-6.537	.207	.584
4.02	.699	-5.102	.207	.585
2.96	.510	-3.724	.205	.592
1.92	.328	-2.397	.204	.605
1.36	.230	-1.674	.201	.575
.83	.139	-1.014	.202	.587
.31	.052	-.380	.204	.590
-.19	-.032	.240	.210	.582
-.72	-.123	.893	.213	.582
-1.24	-.211	1.528	.213	.580
-1.78	-.303	2.195	.212	.594
-2.31	-.395	2.869	.210	.599
-3.33	-.573	4.151	.206	.586
-4.37	-.762	5.529	.207	.582

M = 2.00 Q = 5.850 RN = .3400

ALP	CN	CM	CAB	CAF
6.06	1.085	-7.814	.159	.567
5.03	.895	-6.479	.156	.560
4.01	.700	-5.091	.161	.564
2.92	.513	-3.740	.166	.562
1.87	.330	-2.410	.175	.567
1.31	.228	-1.672	.181	.566
.81	.140	-1.033	.183	.568
.28	.050	-.371	.182	.567
-.23	-.040	.298	.182	.570
-.77	-.133	.980	.182	.567
-1.29	-.222	1.625	.183	.563
-1.81	-.315	2.304	.182	.568
-2.32	-.404	2.949	.179	.560
-3.34	-.586	4.251	.172	.554
-4.40	-.774	5.612	.166	.555

M = 2.50 Q = 4.930 RN = .3200

ALP	CN	CM	CAB	CAF
6.03	1.019	-7.147	.126	.487
5.01	.835	-5.891	.124	.486
3.97	.653	-4.625	.123	.489
2.91	.478	-3.403	.121	.498
1.88	.308	-2.199	.120	.495
1.34	.216	-1.545	.119	.502
.82	.132	-.950	.118	.491
.28	.047	-.333	.118	.500
-.22	-.035	.252	.117	.499
-.74	-.120	.860	.117	.496
-1.26	-.206	1.470	.118	.499
-1.78	-.290	2.059	.118	.498
-2.31	-.376	2.673	.120	.495
-3.31	-.539	3.809	.121	.495
-4.35	-.716	5.047	.121	.488

M = 3.00 Q = 4.130 RN = .3100

ALP	CN	CM	CAB	CAF
5.95	.914	-6.127	.092	.463
4.93	.747	-5.040	.091	.460
3.90	.584	-3.951	.089	.460
2.85	.426	-2.887	.088	.461
1.82	.271	-1.847	.087	.459
1.27	.186	-1.271	.087	.456
.76	.112	-.764	.086	.460
.24	.035	-.243	.086	.465
-.27	-.038	.258	.086	.469
-.78	-.116	.795	.087	.467
-1.29	-.192	1.305	.087	.461
-1.81	-.269	1.828	.087	.467
-2.32	-.345	2.340	.088	.457
-3.33	-.492	3.326	.088	.461
-4.36	-.651	4.384	.088	.471

M = 4.00 Q = 2.340 RN = .2500

ALP	CN	CM	CAB	CAF
5.85	.811	-5.189	.060	.448
4.87	.656	-4.209	.060	.426
3.85	.513	-3.286	.060	.432
2.83	.372	-2.383	.061	.424
1.81	.233	-1.502	.061	.422
1.27	.164	-1.049	.062	.417
.78	.102	-.672	.063	.413
.26	.034	-.224	.063	.412
-.23	-.030	.200	.064	.409
-.75	-.098	.639	.064	.411
-1.25	-.164	1.068	.064	.415
-1.76	-.226	1.446	.064	.434
-2.26	-.291	1.866	.064	.419
-3.27	-.424	2.714	.064	.440
-4.28	-.568	3.642	.064	.416

M = 4.50 Q = 2.450 RN = .3200

ALP	CN	CM	CAB	CAF
5.81	.784	-4.978	.048	.417
4.82	.631	-4.001	.048	.419
3.80	.486	-3.090	.048	.413
2.79	.352	-2.250	.047	.413
1.77	.220	-1.394	.048	.414
1.24	.154	-.981	.048	.419
.75	.092	-.598	.048	.427
.22	.029	-.197	.048	.411
-.27	-.034	.227	.048	.415
-.80	-.100	.664	.049	.394
-1.30	-.162	1.052	.048	.414
-1.81	-.223	1.426	.048	.416
-2.33	-.287	1.831	.048	.411
-3.32	-.421	2.700	.048	.427
-4.33	-.558	3.548	.047	.424

Table 38. Aerodynamic Coefficients for Configuration B1T11X2

M = 1.75 Q = 6.200 RN = .3600

ALP	CN	CM	CAB	CAF
6.13	1.242	-9.834	.175	.569
5.11	1.029	-8.185	.173	.566
4.08	.811	-6.477	.176	.570
3.02	.597	-4.778	.172	.583
1.98	.392	-3.153	.168	.589
1.44	.283	-2.269	.166	.587
.92	.181	-1.451	.163	.592
.39	.080	-.640	.165	.593
-.11	-.023	.194	.165	.591
-.65	-.129	1.033	.167	.589
-1.16	-.230	1.839	.170	.587
-1.69	-.3	2.681	.174	.583
-2.21	-.436	3.493	.176	.583
-3.22	-.634	5.038	.177	.578
-4.27	-.846	6.720	.175	.583

M = 2.00 Q = 5.850 RN = .3400

ALP	CN	CM	CAB	CAF
5.92	1.121	-8.672	.151	.595
4.89	.913	-7.095	.147	.595
3.85	.706	-5.496	.142	.561
2.80	.510	-3.984	.139	.563
1.75	.321	-2.523	.137	.565
1.23	.221	-1.724	.136	.565
.71	.128	-1.006	.134	.569
.17	.032	-.248	.135	.565
-.33	-.059	.466	.135	.571
-.87	-.157	1.225	.136	.563
-1.39	-.250	1.949	.138	.561
-1.91	-.345	2.688	.140	.568
-2.43	-.440	3.427	.142	.556
-3.43	-.621	4.814	.144	.557
-4.47	-.817	6.324	.144	.555

M = 2.50 Q = 4.930 RN = .3200

ALP	CN	CM	CAB	CAF
5.99	1.014	-7.443	.114	.491
4.96	.830	-6.134	.112	.495
3.92	.645	-4.787	.109	.498
2.88	.473	-3.523	.108	.496
1.84	.300	-2.254	.108	.495
1.30	.208	-1.558	.107	.503
.78	.125	-.939	.106	.496
.26	.042	-.318	.107	.496
-.23	-.037	.280	.108	.495
-.77	-.124	.931	.109	.499
-1.27	-.205	1.525	.109	.500
-1.80	-.291	2.167	.110	.503
-2.32	-.374	2.779	.111	.494
-3.32	-.537	3.966	.111	.495
-4.34	-.711	5.243	.111	.493

M = 3.00 Q = 4.130 RN = .3100

ALP	CN	CM	CAB	CAF
5.90	.908	-6.334	.104	.466
4.88	.739	-5.198	.105	.472
3.85	.576	-4.077	.104	.472
2.81	.421	-2.987	.102	.466
1.78	.265	-1.891	.100	.474
1.24	.182	-1.295	.100	.467
.74	.108	-.776	.100	.463
.22	.033	-.240	.100	.463
-.28	-.041	.297	.100	.466
-.81	-.118	.846	.099	.466
-1.31	-.193	1.379	.100	.470
-1.84	-.273	1.940	.100	.469
-2.35	-.348	2.472	.100	.471
-3.35	-.495	3.494	.100	.465
-4.38	-.652	4.584	.101	.475

M = 4.00 Q = 2.340 RN = .2500

ALP	CN	CM	CAB	CAF
5.82	.811	-5.364	.063	.418
4.82	.653	-4.346	.063	.408
3.79	.510	-3.404	.065	.419
2.77	.365	-2.452	.063	.404
1.76	.228	-1.541	.064	.446
1.23	.157	-1.055	.064	.421
.73	.095	-.658	.065	.411
.21	.029	-.204	.065	.419
-.30	-.039	.273	.065	.407
-.81	-.105	.717	.066	.402
-1.30	-.168	1.144	.066	.404
-1.83	-.234	1.588	.066	.408
-2.34	-.301	2.022	.066	.413
-3.32	-.436	2.896	.066	.417
-4.33	-.574	3.839	.066	.421

M = 4.50 Q = 2.450 RN = .3200

ALP	CN	CM	CAB	CAF
5.84	.792	-5.200	.049	.433
4.83	.637	-4.196	.049	.439
3.80	.489	-3.235	.049	.440
2.78	.354	-2.353	.049	.434
1.78	.218	-1.457	.049	.422
1.23	.151	-1.006	.049	.417
.73	.089	-.599	.049	.424
.23	.029	-.206	.049	.423
-.28	-.034	.236	.049	.421
-.80	-.099	.669	.049	.437
-1.31	-.161	1.099	.049	.421
-1.82	-.224	1.506	.049	.420
-2.33	-.291	1.947	.049	.432
-3.31	-.421	2.804	.049	.424
-4.32	-.556	3.682	.048	.426

Table 39. Aerodynamic Coefficients for Configuration B1T11X3

M = 1.75 Q = 6.200 RN = .3600

ALP	CN	CM	CAB	CAF
6.20	1.259	-10.454	.151	.586
5.17	1.042	-8.694	.148	.589
4.14	.825	-6.894	.145	.590
3.10	.613	-5.136	.144	.591
2.06	.407	-3.420	.142	.596
1.51	.296	-2.483	.142	.592
1.02	.199	-1.669	.141	.599
.46	.091	-.768	.141	.585
-.33	-.005	.047	.142	.580
-.55	-.139	.922	.142	.594
-1.06	-.210	1.765	.143	.584
-1.58	-.313	2.626	.144	.573
-2.08	-.412	3.452	.146	.584
-3.10	-.612	5.091	.148	.579
-4.13	-.822	6.848	.153	.579

M = 2.00 Q = 5.850 RN = .3400

ALP	CN	CM	CAB	CAF
5.75	1.074	-8.651	.140	.557
4.73	.865	-6.992	.136	.563
3.69	.660	-5.340	.131	.565
2.66	.466	-3.776	.130	.567
1.61	.285	-2.327	.128	.567
1.07	.188	-1.522	.126	.570
.56	.099	-.804	.126	.570
.05	.009	-.078	.124	.570
-.46	-.080	.653	.123	.578
-.99	-.174	1.412	.123	.570
-1.49	-.262	2.127	.124	.568
-2.00	-.353	2.864	.125	.564
-2.53	-.442	3.592	.126	.563
-3.55	-.617	4.969	.129	.562
-4.57	-.810	6.516	.131	.566

M = 2.50 Q = 4.930 RN = .3200

ALP	CN	CM	CAB	CAF
5.97	1.006	-7.598	.138	.500
4.95	.825	-6.356	.136	.499
3.92	.642	-4.975	.133	.503
2.88	.471	-3.667	.130	.496
1.84	.302	-2.364	.128	.503
1.31	.210	-1.644	.127	.499
.80	.128	-1.007	.125	.507
.27	.046	-.357	.124	.504
-.24	-.038	.300	.124	.508
-.76	-.122	.955	.124	.510
-1.25	-.204	1.586	.125	.509
-1.77	-.288	2.242	.127	.507
-2.29	-.370	2.879	.128	.490
-3.29	-.532	4.116	.130	.503
-4.31	-.708	5.454	.132	.534

M = 3.00 Q = 4.130 RN = .3100

ALP	CN	CM	CAB	CAF
5.95	.919	-6.688	.108	.474
4.92	.748	-5.491	.108	.477
3.90	.584	-4.312	.107	.475
2.86	.427	-3.171	.105	.471
1.83	.272	-2.030	.104	.468
1.30	.191	-1.421	.103	.473
.79	.116	-.861	.103	.458
.26	.039	-.293	.102	.464
-.24	-.034	.256	.102	.464
-.74	-.109	.815	.102	.467
-1.27	-.187	1.385	.102	.464
-1.77	-.262	1.935	.102	.445
-2.29	-.338	2.500	.103	.468
-3.28	-.484	3.557	.104	.473
-4.31	-.644	4.724	.105	.472

M = 4.00 Q = 2.340 RN = .2500

ALP	CN	CM	CAB	CAF
5.81	.813	-5.583	.062	.420
4.79	.653	-4.521	.062	.415
3.76	.503	-3.494	.063	.426
2.75	.365	-2.559	.063	.423
1.73	.230	-1.617	.064	.424
1.20	.154	-1.084	.065	.426
.70	.090	-.638	.065	.413
.17	.024	-.179	.065	.410
-.32	-.042	.294	.066	.419
-.82	-.106	.754	.066	.433
-1.32	-.169	1.180	.066	.418
-1.83	-.236	1.654	.066	.415
-2.33	-.306	2.136	.066	.432
-3.33	-.438	3.050	.066	.434

M = 4.50 Q = 2.450 RN = .3200

ALP	CN	CM	CAB	CAF
5.80	.789	-5.360	.050	.437
4.80	.635	-4.342	.050	.434
3.78	.487	-3.352	.050	.438
2.76	.351	-2.447	.050	.444
1.75	.222	-1.551	.049	.444
1.20	.148	-1.029	.049	.433
.72	.088	-.621	.049	.437
.20	.026	-.186	.049	.430
-.30	-.039	.274	.049	.439
-.82	-.101	.704	.049	.436
-1.32	-.162	1.121	.049	.455
-1.83	-.227	1.582	.049	.448
-2.33	-.294	2.038	.049	.439
-3.32	-.424	2.923	.049	.452
-4.34	-.563	3.846	.049	.440

Table 40. Aerodynamic Coefficients for Configuration B1T12X1

M = .80 Q = 5.700 RN = .3810

ALP	CN	CM	CAB	CAF
-4.74	-.250	1.159	.115	.497
-3.16	-.215	1.152	.110	.517
-2.11	-.125	.653	.109	.518
-1.06	-.049	.248	.107	.529
.02	.041	-.209	.106	.530
1.09	.123	-.727	.107	.522
2.16	.201	-1.135	.107	.518
3.22	.277	-1.527	.110	.507
4.29	.357	-1.938	.114	.501
6.44	.526	-2.827	.122	.485

M = .90 Q = 6.520 RN = .4010

ALP	CN	CM	CAB	CAF
-4.27	-.270	1.362	.101	.483
-3.19	-.172	.765	.098	.487
-2.11	-.083	.270	.096	.495
-1.04	-.026	.063	.092	.504
.02	.002	.103	.088	.507
1.10	.065	-.156	.085	.506
2.17	.148	-.607	.085	.500
3.25	.232	-1.054	.088	.496
4.33	.320	-1.539	.092	.491
6.50	.504	-2.547	.102	.478

M = .95 Q = 6.750 RN = .4090

ALP	CN	CM	CAB	CAF
-4.29	-.285	1.492	.108	.510
-3.20	-.186	.894	.105	.521
-2.12	-.095	.371	.102	.526
-1.05	-.042	.202	.101	.532
.03	.010	.034	.100	.538
1.10	.064	-.153	.103	.525
2.18	.146	-.586	.102	.523
3.27	.242	-1.147	.106	.522
4.35	.342	-1.757	.108	.512
6.54	.556	-3.034	.117	.499

M = 1.00 Q = 7.090 RN = .4190

ALP	CN	CM	CAB	CAF
-4.29	-.273	1.405	.171	.547
-3.21	-.186	.918	.169	.549
-2.13	-.106	.483	.169	.549
-1.05	-.036	.150	.167	.557
.03	.022	-.065	.165	.562
1.11	.069	-.180	.166	.554
2.19	.137	-.502	.169	.550
3.27	.227	-1.006	.169	.545
4.37	.324	-1.561	.167	.542
6.56	.514	-2.626	.181	.539

M = 1.05 Q = 7.460 RN = .4220

ALP	CN	CM	CAB	CAF
-4.31	-.272	1.356	.205	.597
-3.23	-.196	.937	.201	.600
-2.16	-.114	.520	.199	.604
-1.08	-.049	.227	.199	.609
.02	.017	-.082	.199	.613
1.11	.085	-.371	.202	.611
2.20	.158	-.717	.199	.608
3.29	.239	-1.144	.202	.604
4.38	.320	-1.565	.205	.601
6.57	.502	-2.531	.220	.588

M = 1.10 Q = 7.700 RN = .4230

ALP	CN	CM	CAB	CAF
-4.33	-.274	1.349	.205	.605
-3.24	-.197	.960	.202	.609
-2.15	-.118	.566	.200	.614
-1.06	-.049	.231	.198	.617
.03	.024	-.130	.198	.622
1.12	.097	-.471	.199	.622
2.21	.169	-.814	.200	.620
3.30	.246	-1.195	.204	.612
4.40	.325	-1.582	.204	.610
6.60	.503	-2.487	.214	.600
.03	.030	-.160	.198	.620

M = 1.30 Q = 8.400 RN = .4160

ALP	CN	CM	CAB	CAF
-4.37	-.247	1.259	.172	.528
-3.26	-.185	.851	.165	.534
-2.15	-.108	.491	.160	.537
-1.05	-.036	.165	.158	.540
.05	.033	-.143	.157	.53[illegible]
1.15	.104	-.461	.160	.533
2.26	.182	-.822	.166	.533
3.36	.260	-1.194	.173	.526
4.48	.350	-1.651	.180	.519
6.73	.554	-2.730	.197	.501
.05	.038	-.171	.158	.536

M = 1.50 Q = 8.560 RN = .3860

ALP	CN	CM	CAB	CAF
-4.44	-.337	1.718	.158	.436
-3.32	-.246	1.250	.150	.443
-2.21	-.158	.806	.145	.449
-1.09	-.074	.401	.143	.451
.02	.004	.033	.141	.454
1.13	.085	-.340	.144	.452
2.25	.169	-.752	.150	.448
3.37	.262	-1.225	.161	.441
4.49	.362	-1.743	.168	.436
6.78	.590	-2.952	.187	.425
.02	.007	.016	.142	.455

M = 1.75 Q = 8.200 RN = .3500

ALP	CN	CM	CAB	CAF
8.98	.770	-3.885	.216	.342
7.85	.646	-3.212	.209	.341
6.74	.535	-2.641	.201	.344
5.64	.436	-2.138	.195	.348
4.55	.344	-1.674	.189	.351
3.47	.255	-1.227	.184	.351
2.38	.173	-.829	.179	.352
1.80	.128	-.603	.176	.351
1.28	.091	-.439	.173	.352
.72	.053	-.255	.171	.352
.17	.011	-.058	.169	.355
-.38	-.025	.122	.168	.353
-.69	-.064	.319	.168	.354
-1.49	-.106	.507	.170	.356
-1.98	-.144	.708	.174	.353
-3.11	-.232	1.130	.179	.351
-4.17	-.313	1.537	.184	.348

M = 2.00 Q = 5.850 RN = .3500

ALP	CN	CM	CAB	CAF
8.86	.755	-3.683	.176	.318
7.75	.632	-3.059	.174	.315
6.64	.520	-2.497	.168	.316
5.55	.422	-2.016	.163	.317
4.45	.330	-1.563	.157	.319
3.37	.244	-1.145	.153	.319
2.28	.162	-.749	.150	.316
1.72	.122	-.564	.147	.318
1.18	.084	-.390	.144	.320
.64	.045	-.211	.142	.318
.10	.008	-.041	.141	.317
-.43	-.031	.142	.141	.319
-.98	-.070	.328	.141	.319
-1.51	-.106	.486	.143	.319
-2.04	-.145	.674	.146	.318
-3.15	-.227	1.069	.146	.321
-4.23	-.313	1.486	.147	.321

M = 2.50 Q = 4.930 RN = .3100

ALP	CN	CM	CAB	CAF
8.74	.775	-3.665	.140	.273
7.64	.637	-2.955	.141	.271
6.53	.519	-2.371	.139	.272
5.45	.417	-1.885	.136	.273
4.37	.325	-1.456	.132	.276
3.29	.238	-1.059	.129	.277
2.22	.158	-.693	.126	.275
1.67	.116	-.510	.123	.279
1.13	.078	-.346	.121	.277
.60	.041	-.178	.120	.276
.07	.004	-.020	.119	.277
-.47	-.032	.138	.119	.278
-1.00	-.070	.309	.119	.281
-1.53	-.109	.480	.120	.284
-2.07	-.149	.661	.120	.275
-3.13	-.231	1.034	.122	.272
-4.21	-.317	1.432	.126	.277

M = 3.00 Q = 4.130 RN = .3100

ALP	CN	CM	CAB	CAF
8.52	.790	-3.784	.111	.243
7.42	.640	-2.975	.111	.246
6.33	.515	-2.343	.110	.239
5.25	.407	-1.818	.109	.245
4.18	.313	-1.384	.108	.254
3.12	.228	-1.002	.106	.248
2.06	.149	-.652	.105	.250
1.51	.108	-.481	.104	.247
.98	.070	-.312	.102	.245
.45	.031	-.141	.102	.250
-.07	-.004	.018	.101	.248
-.60	-.042	.187	.101	.248
-1.12	-.082	.365	.101	.248
-1.66	-.120	.531	.101	.249
-2.19	-.158	.691	.101	.245
-3.23	-.239	1.060	.102	.245
-4.32	-.325	1.452	.103	.244

Table 41. Aerodynamic Coefficients for Configuration B1T12X2

M = .80 Q = 5.700 RN = .3810

ALP	CN	CM	CAB	CAF
-4.24	-.326	1.945	.162	.476
-3.17	-.228	1.348	.158	.482
-2.10	-.136	.796	.157	.491
-1.04	-.063	.402	.150	.493
.02	.030	-.208	.145	.498
1.09	.128	-.827	.148	.497
2.15	.205	-1.273	.156	.476
3.21	.284	-1.721	.154	.470
4.28	.371	-2.219	.162	.461
6.42	.558	-3.295	.175	.452
2.14	.201	-1.239	.146	.479
-2.11	-.140	.821	.157	.483

M = .90 Q = 6.520 RN = .4010

ALP	CN	CM	CAB	CAF
-4.27	-.305	1.779	.177	.458
-3.19	-.214	1.232	.168	.459
-2.12	-.131	.729	.159	.459
-1.04	-.031	.105	.150	.473
.03	.028	-.164	.146	.482
1.09	.089	-.440	.149	.468
2.17	.185	-1.030	.161	.466
3.24	.274	-1.571	.173	.452
4.32	.368	-2.151	.183	.444
6.49	.566	-3.346	.212	.425
2.17	.181	-1.004	.162	.464
-2.12	-.127	.705	.158	.455

M = .95 Q = 6.750 RN = .4090

ALP	CN	CM	CAB	CAF
-4.28	-.312	1.828	.205	.454
-3.20	-.210	1.202	.197	.462
-2.12	-.125	.684	.185	.475
-1.05	-.049	.283	.183	.470
.02	.020	-.095	.188	.475
1.09	.077	-.339	.185	.470
2.17	.165	-.875	.200	.455
3.25	.262	-1.475	.210	.453
4.34	.364	-2.104	.215	.466
6.51	.568	-3.388	.236	.437
2.17	.168	-.894	.193	.472
-2.12	-.121	.657	.179	.479

M = 1.00 Q = 7.090 RN = .4190

ALP	CN	CM	CAB	CAF
-4.28	-.269	1.438	.277	.507
-3.20	-.186	.963	.267	.509
-2.12	-.124	.693	.267	.515
-1.05	-.055	.345	.278	.512
.03	.019	-.074	.289	.512
1.10	.068	-.224	.267	.507
2.18	.152	-.704	.280	.498
3.27	.240	-1.218	.284	.493
4.35	.328	-1.742	.295	.488
6.53	.530	-2.958	.309	.492
.03	.021	-.085	.284	.511

M = 1.05 Q = 7.460 RN = .4220

ALP	CN	CM	CAB	CAF
-4.30	-.269	1.403	.300	.566
-3.22	-.185	.919	.297	.569
-2.13	-.100	.449	.288	.554
-1.05	-.045	.227	.296	.556
.03	.014	-.050	.323	.562
1.10	.054	-.097	.282	.563
2.18	.137	-.573	.296	.549
3.27	.225	-1.084	.300	.545
4.36	.316	-1.628	.307	.547
6.56	.521	-2.858	.316	.547
2.18	.136	-.567	.295	.545
-2.13	-.104	.468	.287	.554

M = 1.10 Q = 7.700 RN = .4230

ALP	CN	CM	CAB	CAF
-4.32	-.274	1.436	.280	.574
-3.22	-.189	.958	.274	.573
-2.14	-.113	.563	.269	.576
-1.06	-.064	.413	.294	.589
.03	.010	.025	.295	.591
1.11	.083	-.364	.292	.584
2.19	.124	-.427	.273	.568
3.28	.212	-.929	.283	.556
4.38	.303	-1.454	.290	.559
6.58	.509	-2.680	.302	.555
2.19	.124	-.426	.273	.564

M = 1.30 Q = 8.400 RN = .4160

ALP	CN	CM	CAB	CAF
-4.36	-.317	1.816	.235	.516
-3.26	-.229	1.343	.225	.526
-2.16	-.152	.944	.217	.524
-1.06	-.070	.505	.214	.525
.04	.012	.045	.214	.525
1.14	.099	-.435	.217	.528
2.25	.189	-.934	.224	.527
3.35	.275	-1.414	.232	.518
4.47	.377	-2.005	.242	.519
6.71	.578	-3.100	.255	.506
6.70	.569	-3.042	.254	.496
4.46	.372	-1.970	.242	.508

M = 1.50 Q = 8.560 RN = .3860

ALP	CN	CM	CAB	CAF
-4.40	-.339	1.919	.207	.445
-3.28	-.241	1.376	.203	.456
-2.18	-.155	.917	.200	.455
-1.07	-.075	.493	.203	.449
.05	.026	-.079	.201	.459
1.15	.105	-.504	.199	.450
2.27	.203	-1.047	.205	.451
3.38	.296	-1.554	.212	.442
4.50	.393	-2.096	.217	.433
6.76	.622	-3.408	.227	.425
2.26	.199	-1.024	.206	.443
-2.18	-.163	.969	.202	.447

M = 1.75 Q = 6.200 RN = .3500

ALP	CN	CM	CAB	CAF
8.94	.800	-4.355	.240	.359
7.83	.682	-3.745	.237	.359
6.72	.572	-3.158	.231	.361
5.62	.468	-2.584	.223	.360
4.53	.372	-2.041	.216	.365
3.44	.280	-1.556	.213	.361
2.36	.191	-1.064	.210	.365
1.80	.144	-.802	.208	.367
1.25	.099	-.552	.207	.366
.71	.057	-.318	.206	.366
.18	.016	-.089	.205	.367
-.36	-.030	.166	.205	.367
-.90	-.072	.399	.205	.368
-1.44	-.117	.649	.205	.369
-1.99	-.160	.887	.206	.372
-3.06	-.249	1.382	.209	.374
-4.14	-.341	1.895	.213	.372

M = 2.00 Q = 5.850 RN = .3500

ALP	CN	CM	CAB	CAF
8.86	.785	-4.149	.200	.323
7.76	.661	-3.498	.198	.324
6.65	.548	-2.907	.193	.328
5.55	.448	-2.390	.187	.330
4.47	.355	-1.896	.181	.330
3.38	.266	-1.426	.178	.332
2.30	.180	-.964	.176	.332
1.74	.135	-.724	.174	.331
1.20	.092	-.492	.173	.329
.66	.053	-.283	.172	.330
.13	.011	-.061	.172	.328
-.40	-.031	.167	.171	.330
-.95	-.074	.400	.172	.330
-1.48	-.118	.632	.173	.331
-2.02	-.157	.841	.174	.330
-3.11	-.249	1.340	.176	.331
-4.20	-.337	1.809	.179	.330

M = 2.50 Q = 4.930 RN = .3100

ALP	CN	CM	CAB	CAF
8.74	.810	-4.134	.157	.269
7.64	.668	-3.381	.157	.265
6.54	.550	-2.771	.155	.264
5.45	.443	-2.226	.152	.268
4.38	.347	-1.747	.149	.267
3.30	.258	-1.304	.146	.272
2.23	.172	-.871	.143	.278
1.68	.130	-.669	.140	.279
1.14	.088	-.454	.140	.281
.61	.047	-.241	.139	.282
.07	.005	-.029	.139	.280
-.44	-.034	.173	.140	.276
-.99	-.077	.397	.140	.277
-1.51	-.119	.610	.140	.278
-2.05	-.160	.814	.140	.279
-3.13	-.248	1.267	.141	.276
-4.20	-.336	1.701	.141	.275

M = 3.00 Q = 4.130 RN = .3100

ALP	CN	CM	CAB	CAF
8.47	.822	-4.199	.115	.250
7.37	.668	-3.339	.116	.249
6.72	-.559	4.488	.116	.260
5.21	.427	-2.091	.115	.247
4.14	.329	-1.604	.114	.249
3.08	.241	-1.175	.113	.260
2.02	.157	-.772	.112	.252
1.47	.113	-.565	.112	.250
.94	.073	-.369	.111	.260
.42	.032	-.165	.111	.262
-.10	-.009	.049	.111	.261
-.64	-.049	.247	.111	.257
-1.16	-.089	.448	.111	.252
-1.69	-.131	.650	.110	.255
-2.22	-.172	.847	.110	.252
-3.28	-.256	1.263	.110	.248
-4.35	-.346	1.701	.111	.250

Table 42. Aerodynamic Coefficients for Configuration B1T12X5

M = .80 Q = 5.700 RN = .3810

ALP	CN	CM	CAB	CAF
-4.23	-.304	1.806	.190	.435
-3.17	-.224	1.347	.184	.442
-2.10	-.144	.880	.183	.449
-1.04	-.070	.485	.178	.456
.02	.035	-.243	.178	.460
1.09	.136	-.915	.178	.459
2.15	.219	-1.422	.183	.454
3.21	.305	-1.923	.185	.451
4.27	.397	-2.513	.189	.441
6.41	.591	-3.323	.204	.431
.02	.036	-.248	.175	.471

M = .90 Q = 6.520 RN = .4010

ALP	CN	CM	CAB	CAF
-4.26	-.284	1.600	.195	.436
-3.18	-.195	1.059	.184	.439
-2.11	-.121	.656	.176	.445
-1.05	-.073	.506	.166	.449
.03	.048	-.362	.159	.450
1.10	.140	-.959	.166	.450
2.16	.190	-1.122	.185	.442
3.24	.273	-1.596	.195	.442
4.31	.359	-2.122	.206	.434
6.47	.595	-3.300	.235	.417
.03	.047	-.353	.159	.448

M = .95 Q = 6.750 RN = .4090

ALP	CN	CM	CAB	CAF
-4.27	-.292	1.696	.217	.446
-3.19	-.198	1.112	.207	.452
-2.12	-.127	.726	.198	.463
-1.05	-.041	.391	.189	.465
.02	.023	-.129	.185	.463
1.09	.109	-.670	.200	.462
2.17	.196	-1.199	.202	.462
3.24	.281	-1.704	.207	.456
4.32	.376	-2.300	.214	.460
6.49	.574	-3.522	.240	.440
.02	.021	-.115	.188	.460

M = 1.00 Q = 7.090 RN = .4190

ALP	CN	CM	CAB	CAF
-4.28	-.274	1.507	.310	.470
-3.20	.184	.952	.297	.483
-2.12	-.102	.494	.288	.495
-1.05	-.045	.249	.281	.498
.03	.015	-.035	.292	.499
1.10	.079	-.345	.280	.498
2.18	.156	-.771	.295	.488
3.25	.237	-1.239	.310	.468
4.34	.327	-1.784	.317	.462
6.51	.529	-3.039	.332	.448
.02	.016	-.043	.292	.494

M = 1.05 Q = 7.440 RN = .4220

ALP	CN	CM	CAB	CAF
-4.29	-.277	1.529	.321	.533
-3.21	-.189	.999	.313	.543
-2.13	-.114	.585	.310	.557
-1.05	-.056	.349	.330	.553
.02	.013	-.019	.347	.562
1.10	.078	-.340	.318	.554
2.18	.145	-.663	.318	.557
3.26	.221	-1.075	.324	.537
4.35	.307	-1.581	.335	.521
6.54	.507	-2.797	.342	.516
.03	.015	-.034	.346	.559

M = 1.10 Q = 7.700 RN = .4230

ALP	CN	CM	CAB	CAF
-4.31	-.286	1.588	.303	.545
-3.22	-.199	1.073	.296	.555
-2.14	-.121	.641	.300	.566
-1.06	-.067	.448	.329	.567
.02	.006	.046	.335	.568
1.11	.076	-.317	.316	.562
2.19	.141	-.608	.311	.562
3.27	.213	-.977	.304	.553
4.36	.298	-1.447	.317	.530
6.56	.502	-2.680	.325	.513
.02	.008	.029	.332	.569

M = 1.30 Q = 8.400 RN = .4140

ALP	CN	CM	CAB	CAF
-4.38	-.333	1.931	.249	.510
-3.27	-.243	1.410	.244	.511
-2.17	-.154	.896	.236	.514
-1.08	-.074	.471	.237	.509
.02	.006	.029	.239	.511
1.12	.084	-.388	.242	.511
2.22	.170	-.873	.253	.501
3.32	.259	-1.373	.262	.492
4.43	.355	-1.932	.270	.483
6.66	.577	-3.291	.278	.475
.02	.007	.022	.238	.512

M = 1.50 Q = 8.560 RN = .3860

ALP	CN	CM	CAB	CAF
-4.40	-.348	2.006	.218	.437
-3.29	-.255	1.477	.213	.441
-2.19	-.166	.979	.207	.444
-1.08	-.079	.496	.201	.445
.02	.006	.038	.202	.444
1.13	.092	-.427	.213	.435
2.24	.182	-.928	.226	.426
3.35	.275	-1.453	.233	.418
4.47	.374	-2.007	.236	.417
6.72	.598	-3.305	.236	.424
.02	.005	.044	.205	.437

M = 1.75 Q = 6.200 RN = .3530

ALP	CN	CM	CAB	CAF
8.92	.805	-4.486	.248	.348
7.81	.676	-3.763	.244	.352
6.69	.541	-3.116	.239	.354
5.60	.457	-2.525	.231	.357
4.51	.362	-2.007	.226	.351
3.42	.272	-1.509	.225	.350
2.34	.190	-1.079	.221	.351
1.78	.143	-.820	.215	.360
1.24	.102	-.589	.212	.359
.70	.058	-.338	.211	.356
.16	.011	-.063	.210	.358
-.37	-.029	.173	.208	.361
-.92	-.075	.430	.207	.364
-1.46	-.120	.735	.208	.364
-1.99	-.164	.943	.210	.366
-3.07	-.255	1.453	.214	.364
-4.15	-.340	1.919	.218	.363

M = 2.00 Q = 5.850 RN = .3500

ALP	CN	CM	CAB	CAF
8.84	.805	-4.416	.209	.318
7.74	.676	-3.716	.206	.318
6.63	.557	-3.056	.199	.318
5.54	.455	-2.499	.192	.320
4.45	.357	-1.967	.187	.323
3.37	.266	-1.469	.184	.317
2.29	.179	-.988	.185	.315
1.72	.133	-.732	.184	.311
1.18	.092	-.511	.181	.314
.66	.050	-.282	.177	.319
.11	.008	-.049	.174	.322
-.41	-.033	.187	.172	.323
-.97	-.074	.410	.172	.323
-1.48	-.117	.650	.172	.325
-2.03	-.162	.899	.173	.324
-3.12	-.250	1.383	.177	.327
-4.21	-.341	1.887	.181	.326

M = 2.50 Q = 4.930 RN = .3100

ALP	CN	CM	CAB	CAF
8.76	.827	-4.349	.159	.275
7.66	.683	-3.563	.159	.276
6.56	.560	-2.919	.157	.272
5.47	.453	-2.358	.153	.274
4.40	.356	-1.851	.149	.277
3.33	.264	-1.377	.145	.279
2.25	.177	-.928	.142	.282
1.70	.133	-.696	.140	.282
1.17	.092	-.484	.140	.282
.63	.050	-.265	.140	.283
.10	.005	-.025	.139	.281
-.45	-.032	.170	.139	.282
-.96	-.075	.397	.139	.279
-1.49	-.118	.622	.140	.280
-2.01	-.157	.820	.140	.280
-3.09	-.247	1.295	.140	.280
-4.17	-.337	1.763	.142	.280

M = 3.00 Q = 4.130 RN = .3100

ALP	CN	CM	CAB	CAF
8.53	.843	-4.417	.121	.253
7.46	.687	-3.533	.122	.242
6.37	.555	-2.820	.122	.247
5.29	.441	-2.219	.121	.251
4.23	.342	-1.717	.120	.253
3.17	.249	-1.251	.120	.266
2.10	.165	-.832	.120	.262
1.55	.119	-.604	.120	.262
1.03	.079	-.403	.120	.253
.50	.038	-.199	.120	.260
-.02	.000	-.007	.121	.262
-.56	-.042	.219	.121	.249
-1.08	-.085	.439	.121	.255
-1.60	-.126	.647	.121	.247
-2.13	-.166	.839	.121	.250
-3.19	-.253	1.283	.121	.246
-4.24	-.344	1.746	.121	.240

Table 43. Aerodynamic Coefficients for Configuration B1T13X1

M = .80 Q = 5.700 RN = .3810

ALP	CN	CM	CAB	CAF
-4.22	-.257	1.311	.122	.413
-3.16	-.180	.883	.120	.419
-2.10	-.103	.466	.118	.424
-1.03	-.034	.146	.116	.430
.03	.030	-.229	.118	.435
1.09	.112	-.604	.119	.425
2.15	.180	.937	.120	.419
3.22	.256	-1.319	.119	.411
4.29	.347	-1.859	.125	.392
6.42	.487	-2.534	.129	.375
2.15	.165	-.806	.117	.414

M = .90 Q = 6.520 RN = .4010

ALP	CN	CM	CAB	CAF
-4.25	-.239	1.145	.102	.364
-3.18	-.168	.791	.095	.377
-2.10	-.075	.233	.094	.376
-1.04	-.025	.070	.092	.388
.03	.029	-.141	.093	.389
1.10	.084	-.346	.093	.383
2.17	.154	-.685	.093	.377
3.24	.234	-1.123	.093	.371
4.32	.321	-1.606	.098	.367
6.49	.521	-2.769	.110	.352
-4.25	-.237	1.143	.103	.374

M = .95 Q = 6.750 RN = .4090

ALP	CN	CM	CAB	CAF
-4.25	-.200	.778	.121	.433
-3.18	-.135	.460	.120	.426
-2.10	-.056	.060	.114	.433
-1.03	-.015	-.018	.112	.447
.03	.024	-.082	.110	.457
1.10	.079	-.297	.114	.441
2.18	.154	-.671	.113	.439
3.25	.215	-.950	.118	.423
4.33	.294	-1.343	.119	.428
6.50	.454	-2.178	.135	.405
-2.10	-.052	.033	.112	.434

M = 1.00 Q = 7.090 RN = .4190

ALP	CN	CM	CAB	CAF
-4.27	-.225	1.010	.177	.456
-3.19	-.155	.678	.174	.463
-2.12	-.088	.344	.174	.465
-1.04	-.020	.029	.169	.475
.04	.035	-.188	.170	.474
1.11	.097	-.472	.167	.473
2.19	.170	-.835	.169	.466
3.27	.242	-1.197	.168	.467
4.35	.314	-1.545	.178	.447
6.53	.482	-2.418	.192	.428
-2.11	-.083	.310	.169	.472

M = 1.05 Q = 7.460 RN = .4220

ALP	CN	CM	CAB	CAF
-4.30	-.251	1.198	.209	.491
-3.22	-.180	.853	.205	.504
-2.14	-.112	.527	.208	.512
-1.06	-.047	.223	.207	.509
.02	.020	-.097	.208	.517
1.09	.072	-.318	.204	.497
2.17	.141	-.667	.202	.488
3.27	.228	-1.086	.201	.470
4.36	.297	-1.615	.203	.448
6.54	.486	-2.279	.215	.483
-2.14	-.113	.533	.207	.501

M = 1.10 Q = 7.700 RN = .4230

ALP	CN	CM	CAB	CAF
-4.31	-.247	1.163	.197	.507
-3.22	-.178	.846	.195	.509
-2.14	-.110	.521	.194	.518
-1.06	-.048	.244	.196	.517
.03	.015	-.026	.191	.529
1.11	.079	-.319	.189	.520
2.19	.149	-.663	.184	.510
3.29	.228	-1.044	.185	.513
4.37	.288	-1.298	.188	.495
6.56	.447	-2.081	.201	.463
.03	.011	-.002	.190	.525

M = 1.30 Q = 8.400 RN = .4160

ALP	CN	CM	CAB	CAF
-4.34	-.247	1.146	.172	.450
-3.24	-.173	.806	.166	.455
-2.14	-.107	.521	.162	.455
-1.05	-.044	.275	.158	.458
.05	.013	.061	.157	.458
1.14	.078	-.209	.159	.455
2.24	.145	-.494	.163	.448
3.35	.220	-.837	.167	.444
4.46	.302	-1.241	.172	.439
6.70	.498	-2.287	.190	.423
.05	.016	.046	.157	.455

M = 1.50 Q = 8.560 RN = .3860

ALP	CN	CM	CAB	CAF
-4.38	-.265	1.215	.161	.386
-3.26	-.181	.819	.156	.390
-2.16	-.117	.559	.155	.387
-1.06	-.045	.250	.153	.392
.05	.025	-.050	.153	.393
1.16	.095	-.344	.154	.390
2.27	.175	-.708	.156	.384
3.38	.248	-1.036	.166	.378
4.50	.338	-1.485	.173	.380
6.76	.544	-2.558	.189	.367
.05	.022	-.032	.154	.387

M = 1.75 Q = 6.2[illegible] RN = .3500

ALP	CN	CM	CAB	CAF
8.84	.696	-3.244	.216	.295
7.74	.582	-2.470	.213	.294
6.61	.473	-2.126	.204	.294
5.51	.379	-1.669	.197	.300
4.43	.295	-1.282	.191	.303
3.33	.219	-.939	.184	.308
2.23	.144	-.618	.179	.313
1.64	.104	-.454	.175	.310
1.15	.073	-.313	.173	.312
.61	.038	-.161	.173	.311
.37	.005	-.024	.172	.312
-.46	-.030	.130	.172	.313
-1.00	-.063	.284	.171	.320
-1.54	-.096	.407	.172	.317
-2.08	-.134	.574	.173	.313
-3.16	-.207	.904	.175	.316
-4.24	-.283	1.245	.179	.315

M = 2.00 Q = 5.890 RN = .3500

ALP	CN	CM	CAB	CAF
8.81	.686	-3.115	.171	.284
7.70	.564	-2.506	.170	.284
6.60	.462	-2.018	.167	.283
5.50	.372	-1.607	.162	.286
4.42	.291	-1.247	.157	.287
3.33	.214	-.905	.154	.284
2.25	.142	-.595	.150	.284
1.70	.106	-.445	.148	.288
1.18	.072	-.297	.146	.287
.62	.038	-.154	.146	.285
.09	.005	-.017	.146	.285
-.45	-.027	.109	.146	.286
-.99	-.061	.252	.148	.281
-1.52	-.097	.408	.149	.281
-2.06	-.132	.553	.150	.281
-3.15	-.204	.869	.152	.281
-4.23	-.280	1.201	.154	.280

M = 2.50 Q = 4.930 RN = .3100

ALP	CN	CM	CAB	CAF
8.69	.724	-3.249	.142	.254
7.59	.590	-2.570	.142	.250
6.50	.476	-2.023	.140	.249
5.40	.380	-1.582	.138	.251
4.33	.292	-1.194	.134	.247
3.26	.215	-.873	.131	.252
2.18	.142	-.570	.127	.253
1.63	.103	-.412	.125	.251
1.09	.071	-.288	.123	.253
.56	.034	-.135	.123	.253
.04	.001	-.000	.123	.254
-.49	-.030	.119	.123	.255
-1.04	-.066	.264	.123	.256
-1.56	-.101	.411	.123	.252
-2.08	-.133	.532	.123	.250
-3.16	-.209	.857	.124	.251
-4.24	-.282	1.152	.125	.250

M = 3.00 Q = 4.130 RN = .3100

ALP	CN	CM	CAB	CAF
8.54	.777	-3.612	.109	.227
7.44	.621	-2.768	.108	.228
6.35	.495	-2.130	.109	.227
5.28	.389	-1.624	.108	.230
4.20	.297	-1.211	.107	.232
3.14	.217	-.880	.106	.235
2.09	.141	-.563	.105	.233
1.52	.105	-.422	.104	.232
1.00	.065	-.262	.103	.232
.47	.028	-.104	.103	.238
-.05	-.003	.011	.102	.235
-.57	-.039	.157	.101	.228
-1.10	-.068	.264	.101	.227
-1.63	-.104	.409	.101	.227
-2.16	-.141	.559	.102	.229
-3.20	-.213	.860	.102	.226
-4.28	-.295	1.219	.103	.226

Table 44. Aerodynamic Coefficients for Configuration B1T13X2

M = .80 Q = 5.700 RN = .3810

ALP	CN	CM	CAB	CAF
-4.22	-.281	1.605	.179	.376
-3.15	-.186	1.016	.176	.395
-2.09	-.112	.616	.168	.399
-1.03	-.043	.243	.166	.407
.03	.045	-.294	.164	.414
1.08	.115	-.692	.161	.398
2.15	.225	-1.469	.171	.378
3.21	.295	-1.808	.170	.373
4.27	.369	-2.003	.184	.366
5.40	.505	-2.833	.203	.356
6.21	.295	-1.957	.173	.373
2.15	.228	-1.472	.171	.376
5.40	.505	-2.826	.205	.353
-.27	.352	-2.027	.181	.365

M = .90 Q = 6.520 RN = .4010

ALP	CN	CM	CAB	CAF
-4.25	-.293	1.736	.157	.375
-3.17	-.188	1.047	.145	.375
-2.11	-.108	.559	.137	.374
-1.03	-.021	.027	.132	.376
.03	.038	-.229	.137	.379
1.09	.097	-.505	.133	.373
2.17	.189	-1.066	.144	.367
3.24	.291	-1.735	.163	.363
4.32	.383	-2.367	.179	.358
6.47	.558	-3.337	.209	.347
1.09	.092	-.446	.135	.374
.03	.034	-.196	.136	.379

M = .95 Q = 6.750 RN = .4090

ALP	CN	CM	CAB	CAF
-4.26	-.270	1.495	.216	.395
-3.18	-.187	1.034	.211	.399
-2.11	-.103	.539	.207	.401
-1.04	-.034	.175	.213	.407
.03	.036	-.226	.227	.390
1.10	.094	-.472	.225	.366
2.18	.180	-.983	.231	.363
3.25	.256	-1.418	.240	.353
4.32	.338	-1.879	.247	.354
6.49	.515	-2.901	.254	.345
.03	.036	-.229	.225	.383

M = 1.00 Q = 7.090 RN = .4190

ALP	CN	CM	CAB	CAF
-4.27	-.246	1.256	.281	.410
-3.19	-.166	.814	.277	.419
-2.11	-.094	.437	.274	.428
-1.04	-.025	.082	.280	.422
.04	.032	-.157	.281	.411
1.10	.088	-.401	.289	.401
2.18	.163	-.797	.299	.387
3.26	.234	-1.180	.308	.377
4.34	.314	-1.630	.315	.363
6.51	.503	-2.741	.323	.362
1.10	.088	-.406	.290	.397

M = 1.05 Q = 7.460 RN = .4220

ALP	CN	CM	CAB	CAF
-4.29	-.258	1.309	.296	.453
-3.20	-.177	.889	.291	.466
-2.13	-.106	.519	.288	.478
-1.05	-.038	.174	.291	.469
.03	.026	-.136	.305	.464
1.10	.081	-.367	.298	.457
2.18	.152	-.723	.299	.463
3.26	.223	-1.092	.306	.436
4.34	.299	-1.496	.314	.430
6.53	.476	-2.475	.328	.414
1.10	.082	-.374	.298	.457

M = 1.10 Q = 7.700 RN = .4230

ALP	CN	CM	CAB	CAF
-4.30	-.265	1.386	.276	.469
-3.21	-.185	.968	.270	.476
-2.13	-.114	.597	.267	.478
-1.05	-.047	.255	.266	.476
.04	.026	-.111	.276	.481
1.11	.088	-.403	.273	.467
2.19	.156	-.747	.276	.469
3.28	.229	-1.126	.277	.449
4.36	.298	-1.452	.282	.457
6.55	.474	-2.406	.296	.430
1.11	.085	-.390	.273	.467
1.11	.083	-.373	.274	.464

M = 1.30 Q = 8.400 RN = .4160

ALP	CN	CM	CAB	CAF
-4.35	-.285	1.523	.218	.420
-3.24	-.200	1.081	.213	.432
-2.15	-.127	.707	.210	.433
-1.06	-.056	.360	.205	.436
.04	.018	-.011	.207	.440
1.14	.094	-.395	.210	.436
2.23	.164	-.738	.220	.423
3.33	.245	-1.157	.228	.418
4.44	.335	-1.640	.234	.415
6.67	.525	-2.686	.250	.392
.04	.015	-.000	.206	.437

M = 1.50 Q = 8.560 RN = .3860

ALP	CN	CM	CAB	CAF
-4.38	-.304	1.613	.203	.378
-3.27	-.221	1.189	.196	.389
-2.17	-.141	.787	.190	.396
-1.07	-.066	.412	.190	.393
.03	.013	-.005	.189	.393
1.14	.101	-.468	.193	.393
2.25	.181	-.883	.203	.382
3.36	.272	-1.361	.209	.379
4.48	.368	-1.877	.214	.370
6.73	.569	-2.976	.223	.356
.04	.016	-.012	.189	.385

M = 1.75 Q = 6.200 RN = .3500

ALP	CN	CM	CAB	CAF
9.82	.727	-3.694	.236	.249
7.73	.611	-3.096	.231	.304
6.61	.504	-2.540	.224	.305
5.51	.408	-2.049	.220	.304
4.43	.322	-1.616	.217	.303
3.34	.240	-1.203	.213	.305
2.25	.159	-.791	.207	.313
1.70	.117	-.582	.203	.315
1.15	.080	-.397	.202	.314
.61	.042	-.207	.203	.314
.07	.004	-.023	.204	.314
-.48	-.031	.156	.204	.315
-1.02	-.069	.344	.204	.316
-1.55	-.111	.562	.205	.316
-2.37	-.169	.759	.206	.315
-3.17	-.231	1.171	.206	.316
-4.25	-.311	1.571	.206	.319

M = 2.00 Q = 5.850 RN = .3500

ALP	CN	CM	CAB	CAF
8.78	.716	-3.548	.197	.279
7.66	.596	-2.940	.195	.282
6.56	.493	-2.428	.189	.282
5.47	.400	-1.967	.186	.280
4.38	.315	-1.550	.185	.274
3.30	.232	-1.140	.181	.276
2.23	.153	-.752	.176	.280
1.66	.114	-.561	.172	.284
1.12	.077	-.381	.171	.286
.59	.040	-.198	.172	.285
.05	.002	-.008	.172	.287
-.48	-.031	.154	.172	.287
-1.02	-.070	.343	.173	.284
-1.55	-.106	.520	.174	.286
-2.08	-.145	.709	.175	.286
-3.17	-.224	1.105	.176	.285
-4.25	-.305	1.506	.178	.285

M = 2.50 Q = 4.930 RN = .3100

ALP	CN	CM	CAB	CAF
8.71	.755	-3.629	.152	.253
7.60	.616	-2.903	.153	.245
6.50	.502	-2.340	.152	.246
5.42	.403	-1.864	.149	.243
4.34	.313	-1.442	.146	.250
3.27	.230	-1.057	.142	.255
2.20	.152	-.697	.138	.257
1.65	.113	-.526	.137	.256
1.11	.077	-.358	.137	.259
.58	.040	-.188	.136	.262
.05	.003	-.015	.137	.261
-1.02	-.070	.328	.137	.259
-1.55	-.107	.499	.137	.261
-2.07	-.146	.673	.138	.254
-.49	-.033	.157	.136	.262
-3.14	-.224	1.033	.138	.255
-4.21	-.305	1.408	.138	.254

M = 3.00 Q = 4.130 RN = .3100

ALP	CN	CM	CAB	CAF
8.55	.804	-3.949	.115	.235
7.47	.650	-3.086	.117	.229
6.37	.520	-2.410	.116	.227
5.29	.409	-1.859	.114	.224
4.23	.315	-1.413	.113	.228
3.17	.229	-1.016	.111	.236
2.10	.148	-.653	.110	.233
1.55	.106	-.472	.108	.234
1.03	.071	-.318	.108	.234
.50	.036	-.161	.108	.239
-.01	-.003	.020	.108	.241
-.55	-.037	.166	.108	.241
-1.09	-.074	.332	.108	.239
-1.60	-.109	.479	.108	.240
-2.15	-.150	.671	.109	.239
-3.18	-.224	1.000	.109	.230
-4.25	-.315	1.439	.108	.235

Table 45. Aerodynamic Coefficients for Configuration B1T13X5

M = .80 Q = 5.700 RN = .3810

ALP	CN	CM	CAB	CAF
-4.22	-.272	1.913	.205	.316
-3.16	-.197	1.111	.197	.317
-2.10	-.127	.723	.192	.321
-1.06	-.052	.307	.190	.319
.02	.022	-.105	.190	.314
1.08	.097	-.525	.191	.314
2.14	.171	-.936	.198	.305
3.20	.255	-1.430	.207	.302
4.26	.319	-1.738	.217	.292
6.39	.479	-2.578	.250	.282
2.14	.173	-.957	.196	.302

M = .90 Q = 6.520 RN = .4010

ALP	CN	CM	CAB	CAF
-4.25	-.310	1.931	.167	.335
-3.18	-.210	1.248	.161	.335
-2.11	-.126	.738	.153	.337
-1.04	-.048	.279	.151	.344
.02	.026	-.150	.155	.340
1.09	.101	-.572	.153	.333
2.16	.181	-1.058	.155	.329
3.23	.206	-1.774	.167	.326
4.30	.377	-2.333	.193	.315
6.45	.553	-3.364	.239	.300
1.09	.102	-.580	.153	.335

M = .95 Q = 6.750 RN = .4390

ALP	CN	CM	CAB	CAF
-4.26	-.282	1.628	.230	.348
-3.19	-.204	1.176	.222	.360
-2.12	-.132	.794	.204	.371
-1.05	-.052	.311	.206	.369
.02	.021	-.112	.206	.369
1.09	.094	-.518	.213	.367
2.16	.171	-.948	.231	.332
3.23	.249	-1.403	.250	.319
4.31	.330	-1.842	.259	.315
6.47	.517	-3.014	.275	.318
1.09	.095	-.523	.211	.358

M = 1.00 Q = 7.090 RN = .4190

ALP	CN	CM	CAB	CAF
-4.27	-.263	1.428	.299	.382
-3.19	-.181	.952	.291	.397
-2.12	-.114	.616	.276	.402
-1.05	-.045	.249	.275	.404
.02	.017	-.058	.282	.398
1.10	.091	-.476	.291	.378
2.17	.165	-.895	.312	.359
3.25	.243	-1.339	.319	.350
4.32	.323	-1.793	.324	.344
6.49	.507	-2.892	.334	.344
2.17	.164	-.894	.310	.357

M = 1.05 Q = 7.440 RN = .4220

ALP	CN	CM	CAB	CAF
-4.29	-.257	1.307	.316	.431
-3.21	-.182	.900	.313	.436
-2.14	-.119	.607	.311	.454
-1.08	-.060	.347	.313	.444
.01	.007	-.007	.312	.449
1.09	.078	-.388	.308	.454
2.17	.141	-.683	.321	.437
3.24	.213	-1.059	.336	.407
4.33	.294	-1.516	.345	.392
6.51	.477	-2.592	.349	.396
2.17	.143	-.700	.322	.420

M = 1.10 Q = 7.700 RN = .4230

ALP	CN	CM	CAB	CAF
-4.30	-.257	1.299	.291	.442
-3.22	-.183	.911	.283	.446
-2.14	-.122	.640	.290	.459
-1.06	-.062	.379	.290	.448
.02	.007	.012	.291	.463
1.10	.072	-.309	.295	.458
2.18	.137	-.626	.293	.439
3.26	.206	-.959	.303	.409
4.35	.291	-1.435	.313	.405
6.53	.469	-2.473	.312	.397
.02	.008	.002	.291	.464

M = 1.30 Q = 8.400 RN = .4160

ALP	CN	CM	CAB	CAF
-4.34	-.303	1.733	.261	.400
-3.24	-.216	1.265	.255	.411
-2.14	-.135	.827	.243	.423
-1.05	-.059	.407	.232	.425
.04	.019	-.030	.231	.423
1.14	.102	-.487	.234	.425
2.23	.175	-.869	.244	.414
3.32	.255	-1.305	.253	.404
4.43	.349	-1.829	.258	.406
6.66	.545	-2.933	.270	.391
6.66	.543	-2.914	.268	.393
2.22	.173	-.859	.247	.412
1.13	.093	-.422	.235	.420
.04	.017	-.020	.228	.424

M = 1.50 Q = 8.560 RN = .3860

ALP	CN	CM	CAB	CAF
-4.37	-.309	1.709	.227	.377
-3.27	-.227	1.277	.221	.395
-2.17	-.151	.875	.217	.398
-1.07	-.064	.394	.217	.404
.04	.023	-.092	.218	.406
1.14	.103	-.518	.217	.403
2.24	.185	-.944	.221	.397
3.35	.274	-1.437	.225	.397
6.71	.568	-3.028	.244	.367
2.24	.190	-.986	.224	.394
4.46	.362	-1.903	.232	.385

M = 1.75 Q = 6.200 RN = .3500

ALP	CN	CM	CAB	CAF
8.79	.744	-3.944	.251	.313
7.66	.620	-3.273	.248	.305
6.54	.508	-2.663	.240	.308
5.45	.408	-2.118	.234	.308
4.36	.319	-1.640	.228	.309
3.28	.236	-1.215	.223	.312
2.20	.157	-.809	.220	.312
1.64	.116	-.601	.218	.312
1.10	.078	-.411	.218	.311
.54	.040	-.211	.218	.313
.02	.001	-.007	.218	.311
-.51	-.037	.197	.218	.310
-1.06	-.076	.393	.218	.311
-1.58	-.111	.572	.219	.311
-2.13	-.150	.768	.220	.313
-3.21	-.231	1.192	.222	.314
-4.30	-.313	1.609	.225	.313

M = 2.00 Q = 5.850 RN = .3500

ALP	CN	CM	CAB	CAF
8.75	.736	-3.808	.212	.278
7.63	.611	-3.138	.210	.275
6.52	.499	-2.539	.208	.271
5.44	.401	-2.027	.201	.276
4.36	.316	-1.593	.193	.281
3.28	.232	-1.166	.187	.282
2.19	.152	-.759	.184	.285
1.64	.113	-.564	.182	.288
1.10	.076	-.379	.182	.287
.57	.039	-.197	.181	.288
.03	.002	-.013	.181	.288
-.49	-.033	.167	.180	.286
-1.04	-.072	.363	.180	.287
-1.57	-.109	.545	.180	.288
-2.11	-.149	.749	.180	.287
-3.19	-.226	1.139	.181	.290
-4.27	-.309	1.564	.185	.286

M = 2.50 Q = 4.930 RN = .3100

ALP	CN	CM	CAB	CAF
8.71	.771	-3.831	.159	.253
7.61	.630	-3.072	.159	.250
6.51	.510	-2.452	.158	.253
5.42	.408	-1.942	.157	.247
4.35	.317	-1.496	.153	.248
3.28	.233	-1.096	.151	.255
2.20	.153	-.711	.149	.257
1.66	.112	-.523	.148	.253
1.12	.076	-.353	.148	.255
.59	.039	-.184	.147	.255
.05	.004	-.018	.147	.256
-1.00	-.068	.318	.146	.253
-1.53	-.106	.493	.146	.253
-2.06	-.144	.672	.146	.254
-.46	-.030	.141	.147	.258
-3.13	-.222	1.044	.146	.262
-4.20	-.308	1.465	.147	.259

M = 3.00 Q = 4.130 RN = .3100

ALP	CN	CM	CAB	CAF
8.46	.793	-3.987	.122	.232
7.37	.638	-3.115	.122	.229
6.29	.512	-2.448	.122	.228
5.22	.403	-1.892	.122	.227
4.15	.309	-1.426	.122	.231
3.08	.223	-1.021	.121	.227
2.02	.140	-.635	.121	.232
1.47	.102	-.448	.121	.232
.95	.064	-.288	.121	.238
.41	.025	-.105	.121	.244
-.09	-.005	.020	.122	.231
-.63	-.041	.179	.122	.231
-1.16	-.078	.346	.122	.235
-1.68	-.118	.537	.122	.230
-2.20	-.151	.683	.122	.233
-3.24	-.231	1.066	.122	.228
-4.33	-.316	1.482	.122	.230

Table 46. Aerodynamic Coefficients for Configuration B1T13RX1

M = .80 Q = 5.700 RN = .3810

ALP	CN	CM	CAB	CAF
-4.18	-.171	.675	.145	.308
-3.12	-.114	.445	.129	.290
-2.07	-.068	.239	.120	.302
-1.03	-.020	.056	.117	.295
.02	.018	-.046	.118	.295
1.07	.061	-.196	.121	.295
2.12	.107	-.405	.136	.276
3.17	.155	-.591	.149	.275
4.22	.209	-.807	.164	.280
6.35	.343	-1.473	.180	.274
1.07	.068	-.250	.121	.281

M = .90 Q = 6.520 RN = .4010

ALP	CN	CM	CAB	CAF
-4.19	-.159	.593	.129	.326
-3.13	-.105	.361	.117	.326
-2.08	-.053	.141	.097	.343
-1.02	-.010	.000	.079	.358
.03	.016	-.026	.087	.341
1.07	.050	-.117	.102	.332
2.13	.097	-.291	.119	.324
3.19	.147	-.486	.138	.316
4.25	.206	-.745	.150	.310
6.39	.349	-1.496	.172	.326
-2.07	-.055	.158	.099	.336

M = .95 Q = 6.750 RN = .4090

ALP	CN	CM	CAB	CAF
-4.22	-.169	.628	.103	.425
-3.15	-.113	.388	.086	.433
-2.09	-.064	.207	.069	.449
-1.03	-.019	.058	.054	.465
.03	.014	-.005	.057	.459
1.08	.052	-.112	.072	.442
2.14	.096	-.259	.093	.425
3.21	.149	-.468	.111	.412
4.28	.209	-.739	.122	.401
6.45	.391	-1.768	.140	.390
.03	.014	-.007	.059	.454

M = 1.00 Q = 7.090 RN = .4190

ALP	CN	CM	CAB	CAF
-4.25	-.218	1.042	.172	.422
-3.17	-.146	.669	.153	.432
-2.11	-.088	.390	.130	.455
-1.04	-.031	.135	.105	.475
.02	.016	-.044	.106	.475
1.09	.065	-.253	.117	.464
2.15	.124	-.528	.139	.452
3.23	.188	-.848	.158	.446
4.30	.261	-1.229	.176	.433
6.49	.460	-2.409	.201	.421
-4.25	-.214	1.018	.171	.423

M = 1.05 Q = 7.440 RN = .4220

ALP	CN	CM	CAB	CAF
-4.27	-.216	.997	.254	.428
-3.19	-.145	.634	.238	.438
-2.12	-.089	.370	.213	.440
-1.05	-.038	.155	.188	.481
.01	.009	-.035	.186	.482
1.08	.056	-.203	.194	.473
2.15	.109	-.437	.219	.457
3.22	.175	-.759	.241	.440
4.30	.243	-1.100	.256	.429
6.50	.445	-2.276	.275	.426
-4.27	-.217	.998	.255	.425

M = 1.10 Q = 7.700 RN = .4230

ALP	CN	CM	CAB	CAF
-4.27	-.206	.906	.264	.424
-3.19	-.138	.580	.250	.427
-2.12	-.085	.358	.234	.447
-1.05	-.041	.209	.209	.470
.02	.000	.071	.209	.469
1.08	.040	-.045	.208	.461
2.15	.087	-.212	.233	.448
3.22	.146	-.480	.253	.431
4.31	.217	-.825	.267	.422
6.51	.408	-1.905	.282	.419
.02	.001	.042	.211	.469

M = 1.30 Q = 8.400 RN = .4160

ALP	CN	CM	CAB	CAF
-4.26	-.139	.316	.234	.399
-3.18	-.081	.073	.223	.404
-2.10	-.037	-.057	.210	.416
-1.04	-.017	.021	.188	.433
.02	-.015	.254	.189	.436
1.08	-.002	.384	.201	.428
2.15	.037	.291	.220	.408
3.24	.095	.063	.231	.402
4.34	.164	-.252	.241	.397
6.57	.362	-1.351	.255	.400
.02	-.016	.255	.189	.433

M = 1.50 Q = 8.560 RN = .3860

ALP	CN	CM	CAB	CAF
-4.28	-.110	-.037	.211	.426
-3.18	-.053	-.235	.202	.429
-2.10	-.015	-.294	.193	.432
-1.04	-.002	-.145	.180	.441
.01	-.016	.238	.176	.461
2.15	.020	.456	.202	.415
3.25	.075	.275	.213	.416
4.35	.146	-.032	.224	.412
6.60	.344	-1.093	.238	.418
2.16	.021	.467	.203	.410
.02	-.015	.245	.178	.428

M = 1.75 Q = 8.200 RN = .3500

ALP	CN	CM	CAB	CAF
9.37	.538	-2.016	.241	.396
7.96	.407	-1.311	.240	.390
6.82	.285	-.635	.238	.384
5.72	.189	-.134	.234	.378
4.64	.114	.203	.229	.380
3.57	.051	.446	.224	.384
2.50	.009	.534	.217	.379
1.95	-.009	.554	.210	.374
1.43	-.014	.485	.210	.369
.91	-.016	.383	.204	.374
.39	-.006	.153	.198	.385
-.12	.005	-.076	.194	.391
-.66	.005	-.214	.199	.385
-1.17	.001	-.297	.208	.380
-1.69	-.010	-.321	.214	.382
-2.76	-.050	-.249	.225	.385
-3.82	-.105	-.066	.233	.384

M = 2.00 Q = 5.850 RN = .3500

ALP	CN	CM	CAB	CAF
8.92	.560	-2.152	.202	.353
7.80	.421	-1.397	.202	.355
6.69	.297	-.731	.200	.352
5.58	.183	-.104	.198	.358
4.50	.098	.297	.194	.361
3.42	.030	.592	.191	.364
2.36	-.008	.654	.187	.367
1.82	-.023	.639	.179	.365
1.30	-.026	.543	.174	.362
.77	-.026	.408	.173	.361
.26	-.010	.157	.170	.370
-.24	.009	-.137	.167	.377
-.77	.019	-.353	.169	.376
-1.29	.016	-.458	.175	.375
-1.80	.006	-.497	.182	.375
-2.87	-.034	-.424	.189	.377
-3.95	-.103	-.138	.195	.372

Table 47. Aerodynamic Coefficients for Configuration B1T13RX2

M = .80 Q = 5.700 RN = .3810

ALP	CN	CM	CAB	CAF
-4.18	-.176	.691	.103	.280
-3.14	-.129	.492	.089	.282
-2.09	-.080	.308	.074	.293
-1.04	-.034	.133	.062	.302
.02	.016	-.075	.064	.301
1.07	.064	-.260	.064	.304
2.12	.113	-.447	.075	.303
3.17	.162	-.629	.087	.300
4.22	.207	-.794	.106	.298
6.33	.327	-1.322	.131	.298
-4.18	-.175	.677	.100	.286

M = .90 Q = 6.520 RN = .4010

ALP	CN	CM	CAB	CAF
-4.20	-.133	.281	.053	.354
-3.14	-.071	-.027	.036	.366
-2.08	-.031	-.134	.021	.371
-1.03	-.006	-.116	.003	.387
.02	.008	.000	.000	.393
1.06	.027	.071	.007	.387
2.12	.063	.003	.022	.380
3.18	.105	-.117	.039	.382
4.24	.177	-.501	.059	.370
6.37	.256	-.611	.100	.370
.02	.009	-.013	.000	.390
-4.20	-.137	.309	.054	.355

M = .95 Q = 6.750 RN = .4090

ALP	CN	CM	CAB	CAF
-4.24	-.244	1.317	.091	.442
-3.17	-.170	.898	.076	.443
-2.11	-.104	.548	.053	.457
-1.04	-.042	.208	.030	.476
.02	.011	-.034	.030	.474
1.08	.068	-.308	.034	.467
2.14	.135	-.672	.050	.469
3.21	.198	-.996	.072	.457
4.28	.274	-1.415	.095	.450
6.44	.453	-2.451	.128	.438
.02	.012	-.043	.031	.470
-4.24	-.240	1.272	.089	.441

M = 1.00 Q = 7.090 RN = .4190

ALP	CN	CM	CAB	CAF
-4.26	-.272	1.575	.214	.419
-3.18	-.184	1.045	.195	.425
-2.11	-.109	.591	.166	.442
-1.04	-.039	.196	.133	.467
.02	.017	-.087	.129	.469
1.08	.077	-.392	.147	.455
2.15	.150	-.820	.176	.448
3.23	.230	-1.297	.200	.442
4.30	.318	-1.836	.222	.432
6.49	.541	-3.290	.250	.439
.02	.018	-.098	.130	.470

M = 1.05 Q = 7.460 RN = .4220

ALP	CN	CM	CAB	CAF
-4.27	-.264	1.477	.268	.432
-3.20	-.187	1.018	.254	.434
-2.12	-.114	.598	.234	.449
-1.05	-.048	.246	.203	.470
.01	.008	-.028	.198	.475
1.08	.060	-.269	.207	.472
2.15	.128	-.644	.236	.453
3.22	.206	-1.094	.258	.446
4.30	.292	-1.614	.273	.444
6.50	.518	-3.076	.294	.454
.01	.007	-.027	.199	.477

M = 1.10 Q = 7.700 RN = .4230

ALP	CN	CM	CAB	CAF
-4.28	-.247	1.309	.255	.427
-3.20	-.170	.875	.243	.432
-2.12	-.104	.527	.225	.436
-1.05	-.048	.263	.200	.459
.01	-.000	.065	.193	.462
1.08	.048	-.136	.202	.456
2.15	.106	-.413	.229	.440
3.23	.176	-.792	.246	.441
4.31	.254	-1.242	.260	.436
6.51	.478	-2.664	.279	.447
.01	.000	.055	.193	.464
-4.28	-.246	1.298	.254	.428

M = 1.30 Q = 8.400 RN = .4160

ALP	CN	CM	CAB	CAF
-4.28	-.156	.037	.237	.397
-3.19	-.095	.166	.228	.400
-2.11	-.048	.017	.213	.404
-1.04	-.018	.014	.195	.418
.02	-.006	.159	.189	.422
1.09	.012	.250	.203	.410
2.16	.053	.158	.221	.405
3.25	.108	-.059	.236	.405
4.34	.179	-.406	.248	.403
6.34	.179	-.403	.247	.400
6.56	.378	-1.548	.263	.411
1.09	.013	.245	.203	.412
-1.04	-.019	.018	.196	.419

M = 1.50 Q = 8.560 RN = .3860

ALP	CN	CM	CAB	CAF
-4.30	-.124	.043	.224	.418
-3.20	-.068	-.153	.215	.424
-2.11	-.023	-.229	.202	.427
-1.05	-.008	-.118	.189	.433
.01	-.011	.178	.186	.434
1.08	-.006	.402	.192	.430
2.16	.030	.383	.208	.429
3.25	.084	.206	.222	.423
4.35	.152	-.085	.233	.422
6.60	.346	-1.123	.248	.426
1.08	-.003	.400	.194	.426
-1.05	-.009	-.103	.191	.425

M = 1.75 Q = 6.200 RN = .3500

ALP	CN	CM	CAB	CAF
8.89	.506	-1.745	.235	.396
7.76	.381	-1.080	.233	.396
6.65	.266	-.461	.232	.391
5.56	.167	.069	.229	.383
4.47	.091	.423	.223	.386
3.39	.036	.602	.217	.388
2.33	.000	.636	.212	.385
1.78	-.009	.573	.209	.381
1.26	-.015	.480	.205	.380
.73	-.013	.318	.200	.384
.21	-.004	.089	.198	.385
-.31	.006	-.139	.200	.384
-.82	.011	-.321	.200	.385
-1.34	.008	-.435	.205	.383
-1.87	.002	-.518	.210	.385
-2.92	-.031	-.517	.217	.387
-3.99	-.080	-.386	.223	.390

M = 2.00 Q = 5.850 RN = .3500

ALP	CN	CM	CAB	CAF
8.79	.523	-1.794	.194	.369
7.67	.385	-1.034	.193	.371
6.56	.255	-.296	.191	.371
5.46	.142	.329	.188	.376
4.37	.058	.735	.184	.378
3.30	-.002	.953	.178	.385
2.23	-.032	.915	.175	.380
1.69	-.038	.815	.172	.373
1.17	-.034	.641	.169	.374
.65	-.028	.434	.167	.376
.13	-.010	.136	.166	.376
-.37	.016	-.252	.169	.372
-.90	.032	-.548	.171	.372
-1.41	.035	-.717	.175	.376
-1.93	.032	-.834	.179	.376
-2.99	.002	-.882	.183	.381
-4.06	-.056	-.676	.186	.379

Table 48. Aerodynamic Coefficients for Configuration B1T13RX5

M = .80 Q = 5.700 RN = .3810

ALP	CN	CM	CAB	CAF
-4.19	-.191	.799	.090	.277
-3.14	-.139	.593	.077	.283
-2.09	-.089	.390	.072	.285
-1.03	-.039	.143	.066	.287
.02	.021	-.106	.062	.289
1.07	.077	-.352	.068	.285
2.12	.128	-.552	.073	.288
3.18	.176	-.725	.077	.288
4.23	.221	-.870	.094	.276
6.35	.337	-1.364	.133	.270
.02	.073	-.118	.063	.296

M = .90 Q = 6.520 RN = .4010

ALP	CN	CM	CAB	CAF
-3.15	-.125	.473	.024	.355
-2.09	-.084	.361	.007	.365
-1.04	-.037	.188	-.007	.372
.02	.025	-.14[illegible]	-.010	.370
1.08	.079	-.393	.001	.367
2.14	.118	-.483	.015	.363
3.20	.153	-.516	.025	.362
4.26	.202	-.675	.049	.351
6.39	.269	-.633	.102	.349
-4.21	-.173	.642	.039	.347

M = .95 Q = 6.750 RN = .4090

ALP	CN	CM	CAB	CAF
-4.25	-.276	1.637	.064	.427
-3.17	-.201	1.214	.068	.435
-2.11	-.128	.796	.049	.448
-1.04	-.051	.325	.029	.451
.04	.045	-.281	.029	.452
1.09	.101	-.610	.038	.449
2.15	.172	-1.003	.045	.447
3.22	.234	-1.302	.060	.438
4.29	.299	-1.622	.082	.435
6.44	.444	-2.345	.141	.403
-4.25	-.279	1.669	.088	.427

M = 1.00 Q = 7.090 RN = .4190

ALP	CN	CM	CAB	CAF
-4.26	-.301	1.864	.230	.409
-3.19	-.208	1.276	.213	.418
-2.11	-.128	.788	.192	.427
-1.04	-.050	.312	.176	.427
.02	.024	-.140	.171	.434
1.09	.103	-.621	.179	.428
2.16	.180	-1.089	.185	.428
3.24	.257	-1.530	.208	.416
4.31	.347	-2.104	.232	.409
6.49	.561	-3.525	.270	.402
2.16	.180	-1.089	.186	.420

M = 1.05 Q = 7.460 RN = .4220

ALP	CN	CM	CAB	CAF
-4.27	-.293	1.787	.274	.414
-3.20	-.212	1.297	.256	.427
-2.12	-.132	.827	.237	.429
-1.05	-.059	.390	.225	.428
.02	.015	-.061	.218	.426
1.09	.093	-.543	.223	.429
2.16	.166	-.966	.232	.430
3.24	.240	-1.378	.250	.426
4.32	.329	-1.829	.270	.413
6.50	.544	-3.331	.304	.411
1.09	.093	-.545	.223	.430

M = 1.10 Q = 7.700 RN = .4230

ALP	CN	CM	CAB	CAF
-4.28	-.269	1.559	.256	.414
-3.20	-.195	1.141	.243	.421
-2.13	-.131	.809	.225	.426
-1.05	-.066	.467	.210	.428
.02	.006	.030	.204	.428
1.10	.081	-.407	.211	.425
2.17	.138	-.673	.218	.424
3.25	.208	-1.045	.235	.412
4.33	.294	-1.559	.255	.408
6.52	.507	-2.929	.283	.411
2.17	.139	-.677	.218	.425

M = 1.30 Q = 8.400 RN = .4160

ALP	CN	CM	CAB	CAF
-4.28	-.148	.331	.236	.381
-3.20	-.091	.104	.225	.388
-2.12	-.048	.000	.214	.388
-1.04	-.019	.030	.203	.387
.03	.002	.118	.201	.386
1.10	.021	.230	.212	.386
2.18	.050	.259	.221	.389
3.26	.103	.078	.231	.387
4.36	.171	-.244	.241	.385
6.58	.371	-1.424	.263	.386
.03	.001	.131	.203	.384

M = 1.50 Q = 8.560 RN = .3860

ALP	CN	CM	CAB	CAF
-4.30	-.098	-.247	.214	.413
-3.21	-.051	-.356	.210	.409
-2.12	-.017	-.334	.204	.404
-1.04	-.006	-.117	.193	.399
.03	-.007	.207	.191	.393
1.10	-.006	.523	.199	.396
2.19	.017	.640	.208	.399
3.28	.059	.582	.213	.401
4.38	.121	.350	.224	.402
6.62	.321	-.754	.244	.401
1.10	-.006	.521	.200	.397
-1.04	-.006	-.113	.194	.391

M = 1.75 Q = 6.200 RN = .3500

ALP	CN	CM	CAB	CAF
8.70	.476	-1.415	.207	.389
7.59	.351	-.745	.206	.392
6.48	.226	-.016	.204	.396
5.38	.118	.599	.199	.390
4.29	.041	.965	.192	.392
3.22	-.002	1.031	.188	.390
2.16	-.026	.913	.192	.383
1.61	-.031	.800	.190	.378
1.08	-.027	.601	.185	.376
.55	-.017	.355	.180	.377
.03	-.000	.013	.178	.372
-.48	.016	-.293	.180	.370
-1.01	.026	-.571	.183	.369
-1.52	.033	-.796	.186	.369
-2.05	.031	-.945	.189	.367
-3.13	.016	-1.114	.193	.372
-4.20	-.027	-1.066	.195	.377

M = 2.00 Q = 5.850 RN = .3500

ALP	CN	CM	CAB	CAF
8.68	.496	-1.444	.143	.362
7.58	.358	-.686	.141	.360
6.46	.221	.124	.134	.368
5.36	.099	.843	.134	.378
4.28	.007	1.325	.132	.381
3.21	-.044	1.453	.134	.374
2.15	-.064	1.299	.138	.366
1.60	-.060	1.085	.138	.364
1.08	-.048	.812	.135	.365
.55	-.030	.471	.132	.368
.02	-.003	.055	.130	.369
-.49	.026	-.410	.130	.366
-1.01	.048	-.798	.129	.368
-1.52	.060	-1.081	.129	.368
-2.05	.065	-1.297	.130	.371
-3.09	.049	-1.481	.129	.376
-4.15	-.006	-1.319	.129	.377

M = 2.50 Q = 4.930 RN = .3100

ALP	CN	CM	CAB	CAF
8.66	.589	-2.054	.091	.320
7.54	.430	-1.146	.091	.313
6.44	.286	-.307	.088	.308
5.36	.165	.376	.074	.318
4.27	.069	.867	.067	.333
3.17	-.019	1.289	.060	.342
2.11	-.078	1.474	.062	.346
1.58	-.090	1.391	.059	.349
1.07	-.076	1.089	.052	.356
.55	-.050	.673	.049	.365
.03	-.003	.057	.045	.369
-.48	.043	-.585	.045	.364
-.99	.072	-1.040	.048	.362
-1.51	.086	-1.348	.056	.352
-2.03	.078	-1.452	.063	.348
-3.10	.014	-1.241	.060	.348
-4.18	-.070	-.850	.064	.339

M = 3.00 Q = 4.130 RN = .3100

ALP	CN	CM	CAB	CAF
8.56	.664	-2.628	.059	.286
7.47	.487	-1.568	.059	.281
6.38	.339	-.716	.060	.284
5.30	.215	-.025	.058	.281
4.24	.126	.379	.051	.289
3.17	.046	.732	.040	.299
2.11	-.020	.973	.027	.316
1.57	-.051	1.055	.020	.325
1.04	-.055	.911	.015	.330
.53	-.028	.488	.008	.343
.01	-.004	.041	.002	.344
-.49	.030	-.481	.007	.334
-1.00	.053	-.879	.015	.329
-1.54	.039	-.940	.018	.328
-2.06	.009	-.851	.019	.318
-3.11	-.057	-.591	.021	.317
-4.18	-.139	-.233	.031	.309

Table 49. Aerodvnamic Coefficients for Configuration B1T13SX1

M = .80 Q = 5.700 RN = .3810

ALP	CN	CM	CAB	CAF
-4.23	-.259	1.311	.116	.414
-3.17	-.185	.925	.114	.423
-2.11	-.119	.601	.114	.432
-1.04	-.048	.235	.114	.437
.02	.021	-.115	.116	.439
1.08	.089	-.442	.114	.436
2.14	.157	-.780	.117	.425
3.21	.242	-1.262	.116	.417
4.27	.314	-1.625	.116	.405
6.40	.457	-2.313	.122	.387
.02	.024	-.134	.115	.439

M = .90 Q = 6.520 RN = .4010

ALP	CN	CM	CAB	CAF
-4.27	-.281	1.508	.096	.395
-3.19	-.187	.938	.093	.395
-2.12	-.121	.626	.091	.401
-1.05	-.060	.360	.088	.406
.01	-.007	.161	.089	.404
1.09	.056	-.115	.092	.396
2.16	.122	-.422	.095	.392
3.23	.202	-.856	.098	.382
6.48	.525	-2.901	.114	.382
-1.05	-.058	.341	.088	.410

M = .95 Q = 6.750 RN = .4090

ALP	CN	CM	CAB	CAF
-4.29	-.316	1.836	.120	.453
-3.21	-.244	1.479	.118	.460
-2.14	-.156	.950	.119	.458
-1.05	-.060	.358	.120	.460
.02	.012	-.015	.122	.458
1.10	.080	-.347	.122	.453
2.17	.152	-.705	.122	.442
3.25	.217	-1.001	.126	.432
4.32	.284	-1.313	.131	.426
6.50	.458	-2.245	.146	.420
-1.05	-.059	.351	.121	.453

M = 1.00 Q = 7.090 RN = .4190

ALP	CN	CM	CAB	CAF
-4.30	-.299	1.657	.177	.466
-3.22	-.221	1.273	.174	.478
-2.14	-.158	.973	.176	.476
-1.06	-.080	.551	.177	.480
.03	.022	-.093	.177	.489
1.10	.095	-.484	.176	.472
2.18	.138	-.575	.177	.464
3.26	.214	-.947	.183	.475
4.34	.287	-1.316	.185	.458
6.53	.477	-2.384	.197	.449
1.10	.092	-.463	.177	.472
.03	.017	-.056	.176	.477

M = 1.05 Q = 7.460 RN = .4220

ALP	CN	CM	CAB	CAF
-4.31	-.262	1.272	.190	.518
-3.23	-.212	1.171	.194	.529
-2.15	-.151	.887	.204	.520
-1.06	-.069	.460	.205	.540
.02	-.000	.171	.203	.526
2.19	.158	-.779	.192	.524
3.27	.219	-1.013	.187	.524
4.35	.286	-1.316	.196	.526
6.56	.477	-2.375	.216	.503
1.10	.061	-.175	.197	.532
-1.07	-.000	.536	.203	.531

M = 1.10 Q = 7.700 RN = .4230

ALP	CN	CM	CAB	CAF
-4.33	-.277	1.410	.179	.518
-3.23	-.190	.948	.173	.536
-2.15	-.139	.788	.175	.544
-1.06	-.048	.251	.173	.544
.03	.021	-.096	.172	.538
1.11	.091	-.444	.173	.536
2.20	.161	-.781	.173	.527
3.29	.236	-1.147	.171	.529
4.38	.310	-1.507	.172	.523
6.58	.500	-2.595	.194	.480
-2.15	-.139	.785	.178	.534

M = 1.30 Q = 8.400 RN = .4160

ALP	CN	CM	CAB	CAF
-4.35	-.272	1.371	.169	.451
-3.25	-.191	.965	.166	.461
-2.15	-.114	.585	.164	.466
-1.05	-.044	.257	.161	.473
.05	.022	-.037	.160	.467
1.14	.091	-.348	.160	.464
2.25	.171	-.740	.161	.469
3.36	.254	-1.153	.165	.463
4.47	.337	-1.572	.171	.454
6.71	.532	-2.611	.195	.426
1.14	.092	-.362	.160	.466
-1.05	-.045	.268	.161	.467

M = 1.50 Q = 8.560 RN = .3860

ALP	CN	CM	CAB	CAF
-4.39	-.278	1.314	.161	.401
-3.27	-.191	.874	.156	.415
-2.17	-.113	.498	.152	.407
-1.05	-.037	.160	.149	.421
.04	.020	-.035	.147	.419
1.15	.085	-.295	.147	.411
2.25	.163	-.669	.152	.400
3.37	.252	-1.121	.160	.393
4.49	.345	-1.600	.167	.383
6.76	.565	-2.794	.190	.367
1.14	.080	-.251	.150	.392
-1.06	-.042	.204	.151	.398

M = 1.75 Q = 6.200 RN = .3500

ALP	CN	CM	CAB	CAF
8.89	.713	-3.436	.205	.295
7.76	.592	-2.814	.202	.294
6.65	.486	-2.276	.198	.295
5.55	.391	-1.803	.192	.300
4.46	.304	-1.374	.185	.305
3.38	.224	-1.002	.181	.304
2.29	.151	-.665	.179	.301
1.73	.112	-.499	.178	.298
1.19	.079	-.358	.176	.296
.06	.044	-.208	.172	.298
.11	.004	-.026	.171	.299
-.42	-.030	.146	.170	.301
-.97	-.062	.277	.169	.306
-1.50	-.099	.438	.169	.308
-2.04	-.135	.594	.170	.312
-3.13	-.205	.911	.173	.310
-4.21	-.286	1.295	.178	.312

M = 2.00 Q = 5.850 RN = .3500

ALP	CN	CM	CAB	CAF
8.76	.706	-3.320	.175	.276
7.65	.586	-2.727	.173	.279
6.53	.479	-2.201	.168	.280
5.44	.387	-1.762	.160	.279
4.36	.300	-1.349	.154	.280
3.28	.222	-.995	.150	.276
2.20	.150	-.681	.149	.274
1.66	.111	-.506	.146	.274
1.10	.074	-.337	.145	.274
.56	.037	-.166	.144	.275
.02	.001	-.002	.142	.278
-.51	-.033	.149	.142	.279
-1.06	-.071	.321	.142	.281
-1.59	-.108	.494	.143	.277
-2.12	-.146	.668	.146	.275
-3.18	-.219	.998	.148	.274
-4.29	-.297	1.350	.152	.277

M = 2.50 Q = 4.930 RN = .3100

ALP	CN	CM	CAB	CAF
8.67	.754	-3.521	.140	.247
7.56	.614	-2.793	.140	.247
6.46	.497	-2.215	.138	.242
5.38	.398	-1.749	.135	.244
4.29	.309	-1.352	.131	.242
3.22	.228	-.988	.127	.247
2.15	.148	-.635	.124	.252
1.59	.109	-.469	.121	.247
1.06	.072	-.311	.121	.248
.53	.036	-.155	.120	.250
-.01	-.000	.000	.120	.249
-.53	-.036	.155	.120	.250
-1.07	-.073	.317	.120	.248
-1.61	-.108	.461	.120	.247
-2.13	-.147	.635	.121	.246
-2.66	-.183	.790	.121	.247
-3.19	-.221	.955	.121	.247
-4.26	-.304	1.330	.123	.245

M = 3.00 Q = 4.130 RN = .3100

ALP	CN	CM	CAB	CAF
8.46	.783	-3.739	.108	.226
7.36	.633	-2.926	.109	.223
6.27	.505	-2.267	.109	.226
5.19	.396	-1.741	.108	.232
4.13	.303	-1.310	.106	.234
3.06	.220	-.947	.104	.230
2.01	.141	-.599	.103	.235
1.45	.102	-.443	.100	.233
.92	.065	-.283	.099	.235
.39	.025	-.102	.099	.233
-.12	-.007	.030	.099	.244
-.66	-.044	.187	.098	.231
-1.19	-.083	.365	.098	.229
-1.70	-.117	.502	.099	.233
-2.24	-.157	.680	.100	.227
-3.30	-.232	1.009	.100	.227
-4.37	-.317	1.386	.101	.221

Table 50. Aerodynamic Coefficients for Configuration B1T13SX2

M = .80 Q = 5.700 RN = .3810

ALP	CN	CM	CAB	CAF
-4.22	-.308	1.857	.180	.404
-3.16	-.236	1.483	.178	.403
-2.10	-.155	1.013	.182	.407
-1.04	-.057	.367	.183	.425
.02	.030	-.179	.185	.429
1.09	.115	-.693	.180	.413
2.15	.202	-1.221	.182	.408
3.21	.289	-1.756	.175	.388
4.27	.368	-2.168	.179	.392
6.40	.516	-2.959	.189	.380
.03	.035	-.204	.187	.426

M = .90 Q = 6.520 RN = .4010

ALP	CN	CM	CAB	CAF
-4.25	-.310	1.899	.156	.387
-3.18	-.211	1.252	.148	.388
-2.11	-.124	.716	.144	.392
-1.04	-.039	.209	.143	.400
.03	.021	-.066	.155	.394
1.10	.099	-.512	.163	.385
2.17	.195	-1.120	.174	.382
3.24	.288	-1.712	.178	.379
4.32	.382	-2.285	.193	.378
6.48	.564	-3.333	.220	.369
4.32	.386	-2.324	.192	.377

M = .95 Q = 6.750 RN = .4090

ALP	CN	CM	CAB	CAF
-4.27	-.315	1.936	.206	.402
-3.19	-.234	1.478	.201	.408
-2.12	-.139	.870	.215	.403
-1.04	-.059	.397	.218	.405
.03	.025	-.113	.217	.402
1.10	.106	-.587	.210	.405
2.17	.179	-.985	.217	.396
3.25	.260	-1.437	.232	.390
4.33	.346	-1.928	.241	.396
6.50	.568	-3.390	.247	.384
.03	.024	-.107	.218	.398

M = 1.00 Q = 7.090 RN = .4190

ALP	CN	CM	CAB	CAF
-3.21	-.229	1.376	.296	.411
-2.13	-.159	1.025	.274	.425
-1.06	-.084	.607	.278	.424
.02	-.004	.132	.292	.422
1.10	.088	-.457	.304	.415
2.17	.171	-.940	.301	.409
3.25	.228	-1.179	.304	.404
4.32	.303	-1.568	.314	.394
6.50	.488	-2.641	.318	.382
1.09	.082	-.410	.301	.417

M = 1.05 Q = 7.460 RN = .4220

ALP	CN	CM	CAB	CAF
-4.31	-.300	1.679	.336	.450
-3.23	-.226	1.316	.319	.459
-2.15	-.165	1.030	.306	.476
-1.07	-.094	.667	.302	.484
.00	-.020	.245	.310	.477
1.08	.061	-.237	.319	.478
2.16	.133	-.607	.332	.481
3.25	.218	-1.090	.335	.483
4.33	.294	-1.504	.332	.471
6.52	.485	-2.616	.337	.450
.01	-.015	.205	.315	.473
-1.07	-.090	.636	.302	.480

M = 1.10 Q = 7.700 RN = .4230

ALP	CN	CM	CAB	CAF
-4.32	-.297	1.642	.311	.466
-3.23	-.217	1.208	.304	.477
-2.15	-.166	1.048	.290	.484
-1.08	-.098	.700	.291	.486
.02	-.011	.197	.295	.485
1.08	.055	-.178	.301	.479
1.10	.064	-.245	.299	.484
2.18	.141	-.643	.299	.483
3.27	.223	-1.100	.297	.482
4.35	.296	-1.495	.306	.466
6.55	.498	-2.696	.315	.454
.01	-.013	.205	.295	.481

M = 1.30 Q = 8.400 RN = .4160

ALP	CN	CM	CAB	CAF
-4.35	-.297	1.626	.251	.422
-3.25	-.212	1.173	.244	.440
-2.15	-.134	.756	.235	.449
-1.06	-.058	.363	.227	.449
.03	.015	-.008	.219	.449
1.13	.093	-.423	.221	.446
2.22	.168	-.806	.229	.444
3.32	.249	-1.236	.238	.438
4.43	.336	-1.706	.243	.431
4.43	.336	-1.701	.241	.432
6.66	.538	-2.851	.251	.413
.04	.019	-.036	.220	.447

M = 1.50 Q = 8.560 RN = .3860

ALP	CN	CM	CAB	CAF
-4.38	-.303	1.588	.212	.367
-3.27	-.209	1.067	.202	.384
-2.16	-.123	.608	.195	.391
-1.06	-.051	.277	.192	.399
.04	.014	.008	.188	.400
1.14	.083	-.300	.189	.400
2.24	.169	-.759	.196	.393
3.36	.262	-1.270	.202	.389
4.47	.361	-1.825	.211	.383
6.73	.584	-3.105	.224	.368
1.13	.081	-.295	.193	.396
-1.07	-.052	.268	.194	.391

M = 1.75 Q = 6.200 RN = .3500

ALP	CN	CM	CAB	CAF
8.76	.733	-3.794	.231	.306
7.65	.614	-3.162	.227	.305
6.54	.503	-2.570	.222	.307
5.44	.401	-2.021	.219	.309
4.36	.310	-1.528	.216	.309
3.27	.225	-1.093	.211	.312
2.18	.147	-.699	.207	.310
1.63	.108	-.511	.204	.314
1.08	.071	-.337	.202	.316
.55	.038	-.186	.202	.312
.01	.003	-.021	.203	.311
-.52	-.036	.184	.203	.313
-1.06	-.071	.339	.203	.314
-1.60	-.107	.509	.203	.316
-2.14	-.144	.686	.202	.317
-3.22	-.222	1.078	.203	.320
-4.31	-.305	1.502	.208	.319

M = 2.00 Q = 5.850 RN = .3500

ALP	CN	CM	CAB	CAF
8.74	.728	-3.682	.190	.284
7.62	.607	-3.053	.188	.284
6.52	.499	-2.491	.184	.284
5.43	.402	-1.986	.181	.287
4.34	.313	-1.533	.178	.285
3.26	.229	-1.114	.176	.283
2.19	.153	-.748	.173	.281
1.62	.114	-.568	.170	.282
1.09	.077	-.383	.170	.282
.55	.038	-.186	.169	.285
.01	.000	.000	.168	.287
-.52	-.036	.175	.167	.292
-1.06	-.074	.368	.167	.289
-1.59	-.113	.563	.168	.288
-2.12	-.152	.761	.168	.291
-3.21	-.228	1.119	.168	.293
-4.30	-.309	1.524	.171	.292

M = 2.50 Q = 4.930 RN = .3100

ALP	CN	CM	CAB	CAF
8.68	.772	-3.788	.151	.255
7.58	.631	-3.040	.151	.247
6.48	.513	-2.442	.149	.245
5.40	.411	-1.940	.146	.249
4.32	.323	-1.526	.142	.246
3.25	.238	-1.126	.139	.253
2.18	.157	-.748	.138	.250
1.63	.118	-.568	.136	.252
1.09	.079	-.387	.136	.254
.57	.042	-.205	.135	.259
.02	.002	-.010	.135	.260
-.49	-.036	.178	.136	.256
-1.03	-.075	.365	.136	.259
-1.56	-.114	.550	.136	.255
-2.09	-.152	.732	.137	.262
-3.16	-.236	1.137	.138	.250
-4.22	-.315	1.498	.138	.250

M = 3.00 Q = 4.130 RN = .3100

ALP	CN	CM	CAB	CAF
8.47	.803	-4.006	.112	.229
7.37	.647	-3.127	.113	.231
6.28	.514	-2.419	.113	.230
5.22	.406	-1.875	.112	.230
4.15	.313	-1.437	.111	.229
3.09	.227	-1.037	.110	.229
2.03	.145	-.661	.109	.237
1.47	.107	-.502	.109	.239
.95	.068	-.324	.108	.235
.42	.031	-.148	.108	.245
-.09	-.008	.042	.108	.238
-.62	-.045	.215	.108	.231
-1.16	-.083	.389	.108	.234
-1.68	-.123	.577	.109	.233
-2.21	-.159	.738	.109	.236
-3.27	-.239	1.110	.109	.235
-4.34	-.325	1.513	.109	.229

Table 51. Aerodynamic Coefficients for Configuration B1T13SX5

M = .80 Q = 5.700 RN = .3810

ALP	CN	CM	CAB	CAF
-4.23	-.328	2.056	.218	.356
-3.17	-.248	1.595	.211	.355
-2.11	-.161	1.046	.195	.351
-1.04	-.053	.307	.189	.332
.02	.021	-.116	.188	.332
1.08	.099	-.557	.188	.328
2.14	.217	-1.419	.211	.341
3.21	.301	-1.920	.214	.345
4.27	.383	-2.309	.219	.341
6.40	.546	-3.299	.245	.341
1.08	.101	-.575	.187	.324
-1.04	-.052	.295	.187	.328

M = .90 Q = 6.520 RN = .4010

ALP	CN	CM	CAB	CAF
-4.26	-.342	2.232	.193	.344
-3.19	-.263	1.767	.176	.349
-2.12	-.166	1.120	.170	.350
-1.05	-.059	.369	.166	.360
.02	.032	-.217	.166	.359
1.09	.124	-.811	.169	.351
2.16	.219	-1.427	.172	.349
3.23	.298	-1.885	.191	.338
4.31	.390	-2.449	.214	.324
6.46	.570	-3.501	.256	.311
-4.26	-.346	2.263	.192	.348

M = .95 Q = 6.750 RN = .4090

ALP	CN	CM	CAB	CAF
-4.27	-.325	2.039	.234	.358
-3.20	-.237	1.504	.220	.370
-2.12	-.144	.900	.213	.375
-1.05	-.063	.421	.205	.385
.02	.015	-.055	.205	.384
1.09	.100	-.576	.209	.377
2.17	.193	-1.177	.216	.368
3.24	.275	-1.657	.233	.353
4.32	.358	-2.137	.258	.337
6.49	.556	-3.346	.285	.328
1.09	.102	-.593	.213	.376
-1.05	-.064	.420	.208	.390

M = 1.00 Q = 7.090 RN = .4190

ALP	CN	CM	CAB	CAF
-4.27	-.286	1.670	.323	.376
-3.19	-.198	1.140	.310	.391
-2.12	-.122	.692	.295	.404
-1.05	-.044	.235	.288	.413
.03	.039	-.264	.285	.415
1.10	.109	-.647	.279	.407
2.17	.168	-.924	.302	.382
3.26	.250	-1.370	.328	.367
4.33	.326	-1.807	.341	.362
6.50	.512	-2.931	.360	.338
1.10	.109	-.656	.276	.412
-1.04	-.038	.192	.287	.417

M = 1.05 Q = 7.460 RN = .4220

ALP	CN	CM	CAB	CAF
-4.30	-.276	1.508	.339	.432
-3.21	-.199	1.090	.314	.450
-2.14	-.129	.716	.317	.468
-1.05	-.054	.319	.330	.477
.02	.025	-.183	.333	.481
1.10	.104	-.642	.315	.485
2.18	.161	-.854	.311	.485
3.25	.216	-1.086	.343	.471
6.34	.305	-1.608	.362	.414
6.51	.479	-2.635	.376	.373
1.10	.108	-.669	.312	.467

M = 1.10 Q = 7.700 RN = .4230

ALP	CN	CM	CAB	CAF
-4.31	-.284	1.564	.311	.456
-3.22	-.200	1.108	.302	.458
-2.14	-.132	.761	.293	.481
-1.06	-.060	.385	.303	.487
.02	.021	-.118	.310	.469
2.18	.149	-.731	.288	.469
3.26	.211	-1.016	.318	.427
4.36	.308	-1.582	.327	.432
6.55	.489	-2.639	.341	.405

M = 1.30 Q = 8.400 RN = .4160

ALP	CN	CM	CAB	CAF
-4.34	-.300	1.729	.250	.438
-3.24	-.213	1.239	.243	.441
-2.15	-.132	.792	.237	.442
-1.05	-.051	.351	.239	.442
.05	.026	-.076	.242	.438
1.14	.103	-.482	.243	.439
2.24	.185	-.942	.255	.431
3.34	.275	-1.463	.264	.426
4.44	.367	-2.000	.271	.425
6.68	.583	-3.308	.280	.411
.05	.025	-.066	.235	.445

M = 1.50 Q = 8.560 RN = .3860

ALP	CN	CM	CAB	CAF
-4.38	-.312	1.711	.225	.380
-3.27	-.222	1.218	.219	.384
-2.17	-.137	.752	.211	.387
-1.07	-.059	.353	.206	.390
.04	.023	-.090	.204	.390
1.14	.103	-.510	.209	.389
2.24	.188	-.966	.219	.381
3.35	.277	-1.458	.228	.376
4.47	.371	-1.970	.234	.373
6.72	.584	-3.168	.241	.361
.03	.019	-.074	.205	.389

M = 1.75 Q = 8.200 RN = .3500

ALP	CN	CM	CAB	CAF
8.73	.743	-3.966	.252	.303
7.62	.620	-3.285	.245	.305
6.51	.506	-2.650	.236	.305
5.41	.402	-2.070	.229	.310
4.33	.310	-1.563	.226	.313
3.24	.224	-1.115	.222	.316
2.16	.147	-.719	.217	.315
1.60	.107	-.518	.212	.315
1.07	.069	-.333	.211	.315
.52	.034	-.165	.210	.311
-.00	.001	-.012	.209	.309
-.54	-.037	.191	.210	.310
-1.08	-.070	.332	.213	.311
-1.61	-.105	.499	.215	.313
-2.14	-.142	.677	.217	.315
-3.25	-.222	1.086	.220	.317
-4.33	-.309	1.553	.224	.318

M = 2.00 Q = 5.850 RN = .3500

ALP	CN	CM	CAB	CAF
8.65	.738	-3.864	.207	.277
7.54	.614	-3.192	.207	.277
6.44	.500	-2.578	.201	.279
5.36	.402	-2.050	.193	.281
4.27	.310	-1.564	.187	.281
3.18	.226	-1.129	.182	.283
2.11	.147	-.735	.178	.284
1.55	.110	-.560	.177	.278
1.01	.071	-.367	.176	.281
.47	.032	-.164	.177	.279
-.05	-.002	.010	.177	.280
-.59	-.042	.219	.177	.283
-1.13	-.080	.406	.177	.282
-1.66	-.120	.615	.177	.280
-2.19	-.158	.809	.178	.279
-3.29	-.233	1.169	.180	.288
-4.37	-.315	1.591	.182	.286

M = 2.50 Q = 4.930 RN = .3100

ALP	CN	CM	CAB	CAF
8.64	.776	-3.910	.155	.254
7.54	.637	-3.156	.156	.253
6.45	.515	-2.510	.155	.248
5.36	.410	-1.979	.154	.257
4.28	.319	-1.541	.151	.256
3.21	.235	-1.135	.148	.250
2.14	.155	-.759	.146	.255
1.59	.115	-.565	.144	.253
1.06	.076	-.374	.143	.254
.52	.039	-.195	.141	.261
.00	-.000	.001	.141	.275
-.53	-.038	.188	.141	.262
-1.06	-.077	.381	.142	.252
-1.60	-.116	.571	.142	.259
-2.12	-.154	.752	.143	.253
-3.20	-.233	1.136	.144	.256
-4.25	-.319	1.556	.146	.258

M = 3.00 Q = 4.130 RN = .3100

ALP	CN	CM	CAB	CAF
8.40	.810	-4.143	.121	.232
7.32	.652	-3.241	.122	.234
6.23	.521	-2.535	.121	.231
5.16	.408	-1.951	.120	.233
4.09	.308	-1.456	.120	.236
3.04	.223	-1.047	.120	.254
1.97	.142	-.664	.119	.249
1.41	.100	-.470	.119	.233
.89	.062	-.289	.118	.234
.36	.026	-.127	.119	.236
-.16	-.012	.063	.119	.241
-.68	-.050	.239	.119	.234
-1.22	-.082	.379	.119	.237
-1.74	-.126	.594	.120	.234
-2.27	-.166	.790	.119	.238
-3.35	-.247	1.185	.120	.230
-4.37	-.329	1.575	.120	.236

Table 52. Aerodynamic Coefficients for Configuration B1T14X1

M = .80 Q = 5.700 RN = .3810

ALP	CN	CM	CAB	CAF
-4.23	-.273	1.449	.155	.181
-3.17	-.198	1.040	.149	.183
-2.10	-.115	.585	.148	.191
-1.04	-.041	.176	.148	.187
.02	.038	-.268	.146	.190
1.09	.116	-.694	.148	.181
2.15	.193	-1.112	.150	.177
3.21	.271	-1.538	.153	.170
4.28	.347	-1.945	.154	.167
5.42	.512	-2.820	.168	.153
.02	.037	-.259	.147	.180

M = .90 Q = 6.520 RN = .4010

ALP	CN	CM	CAB	CAF
-4.26	-.275	1.460	.126	.216
-3.19	-.202	1.082	.124	.223
-2.12	-.123	.649	.122	.223
-1.05	-.043	.207	.122	.224
.03	.038	-.252	.121	.226
1.10	.115	-.679	.120	.221
2.17	.190	-1.067	.123	.214
3.25	.269	-1.492	.128	.206
4.32	.348	-1.915	.136	.196
6.48	.511	-2.768	.152	.180
-4.26	-.275	1.458	.128	.214

M = .95 Q = 6.750 RN = .4090

ALP	CN	CM	CAB	CAF
-4.29	-.327	1.922	.112	.264
-3.21	-.234	1.372	.110	.267
-2.13	-.138	.786	.110	.267
-1.05	-.051	.274	.109	.268
.03	.040	-.279	.109	.265
1.11	.144	-.941	.107	.266
2.19	.236	-1.496	.110	.257
3.28	.329	-2.042	.114	.251
4.36	.421	-2.571	.121	.245
6.54	.608	-3.621	.139	.231
-4.30	-.328	1.929	.113	.265

M = 1.00 Q = 7.090 RN = .4190

ALP	CN	CM	CAB	CAF
-4.30	-.296	1.643	.145	.280
-3.21	-.209	1.158	.144	.284
-2.13	-.132	.732	.141	.276
-1.05	-.042	.208	.144	.284
.03	.046	-.320	.145	.278
1.12	.130	-.798	.141	.280
2.20	.216	-1.286	.146	.266
3.28	.299	-1.750	.146	.263
4.38	.390	-2.266	.152	.259
6.57	.592	-3.450	.177	.235
-4.30	-.299	1.667	.145	.277

M = 1.05 Q = 7.460 RN = .4220

ALP	CN	CM	CAB	CAF
-4.32	-.310	1.734	.212	.294
-3.23	-.218	1.219	.207	.307
-2.14	-.139	.779	.206	.302
-1.06	-.059	.328	.204	.307
.02	.029	-.195	.203	.306
1.11	.109	-.649	.203	.299
2.20	.200	-1.160	.202	.300
3.29	.280	-1.597	.209	.288
4.38	.368	-2.079	.211	.290
6.57	.563	-3.200	.236	.264
.03	.034	-.228	.202	.304

M = 1.10 Q = 7.700 RN = .4230

ALP	CN	CM	CAB	CAF
-4.33	-.307	1.699	.208	.299
-3.24	-.221	1.229	.204	.303
-2.15	-.137	.767	.204	.302
-1.06	-.058	.337	.199	.300
.02	.020	-.103	.198	.302
1.11	.103	-.566	.198	.295
2.20	.184	-1.001	.199	.293
3.30	.269	-1.466	.201	.296
4.39	.358	-1.952	.211	.284
6.61	.566	-3.140	.234	.272
-4.33	-.307	1.700	.209	.301

M = 1.30 Q = 8.400 RN = .4160

ALP	CN	CM	CAB	CAF
-4.34	-.250	1.191	.195	.259
-3.24	-.175	.837	.193	.258
-2.14	-.105	.505	.190	.260
-1.05	-.040	.205	.186	.263
.04	.023	-.081	.185	.262
1.13	.090	-.386	.186	.261
2.23	.158	-.696	.189	.257
3.32	.231	-1.035	.195	.252
4.43	.313	-1.441	.200	.251
6.67	.514	-2.537	.220	.240
-4.34	-.249	1.174	.195	.270
.04	.025	-.095	.183	.271

M = 1.50 Q = 8.560 RN = .3860

ALP	CN	CM	CAB	CAF
-4.37	-.252	1.101	.192	.284
-3.25	-.155	.598	.191	.286
-2.15	-.093	.356	.191	.283
-1.05	-.032	.126	.188	.280
.04	.020	-.054	.184	.278
1.13	.080	-.288	.187	.274
2.24	.152	-.594	.193	.266
3.35	.238	-1.025	.197	.259
4.48	.339	-1.566	.199	.255
6.74	.548	-2.681	.214	.249
-4.36	-.244	1.053	.193	.268

M = 1.75 Q = 8.200 RN = .3500

ALP	CN	CM	CAB	CAF
9.00	.708	-3.390	.211	.236
7.87	.586	-2.756	.209	.231
6.76	.483	-2.251	.210	.224
5.67	.400	-1.876	.209	.224
4.58	.317	-1.483	.203	.231
3.49	.231	-1.054	.198	.237
2.40	.141	-.573	.195	.243
1.84	.097	-.349	.194	.245
1.30	.060	-.173	.195	.245
.77	.031	-.068	.195	.249
.23	.009	-.019	.197	.244
-.29	-.011	.020	.197	.245
-.83	-.036	.098	.197	.245
-1.37	-.072	.260	.197	.246
-1.91	-.115	.478	.198	.244
-3.02	-.205	.952	.198	.242
-4.10	-.295	1.429	.199	.240

M = 2.00 Q = 5.850 RN = .3500

ALP	CN	CM	CAB	CAF
8.79	.706	-3.341	.178	.229
7.68	.582	-2.716	.178	.227
6.58	.480	-2.225	.180	.223
5.49	.399	-1.891	.180	.221
4.41	.328	-1.606	.175	.224
3.33	.256	-1.303	.170	.230
2.25	.178	-.921	.166	.235
1.69	.138	-.730	.165	.231
1.14	.086	-.426	.165	.231
.61	.041	-.190	.165	.233
.06	.002	-.001	.165	.235
-.46	-.030	.133	.165	.234
-.90	-.066	.322	.165	.235
-1.06	-.081	.409	.165	.235
-1.54	-.124	.649	.166	.230
-2.09	-.165	.859	.166	.233
-3.16	-.245	1.258	.167	.231
-4.25	-.321	1.599	.167	.229

M = 2.50 Q = 4.930 RN = .3100

ALP	CN	CM	CAB	CAF
8.66	.760	-3.423	.142	.231
7.54	.603	-2.721	.143	.222
6.44	.490	-2.181	.142	.229
5.36	.407	-1.860	.138	.223
4.29	.332	-1.569	.133	.230
3.22	.252	-1.228	.130	.238
2.15	.161	-.765	.128	.240
1.58	.113	-.516	.128	.233
1.05	.072	-.320	.129	.233
.51	.035	-.155	.129	.232
-.01	-.001	.007	.129	.233
-.55	-.036	.158	.129	.233
-1.08	-.075	.334	.130	.232
-1.61	-.118	.548	.130	.226
-2.15	-.167	.813	.129	.352
-3.24	-.256	1.258	.127	.229
-4.28	-.333	1.583	.127	.227

M = 3.00 Q = 4.130 RN = .3100

ALP	CN	CM	CAB	CAF
8.50	.747	-3.432	.109	.209
7.41	.609	-2.741	.109	.220
6.32	.498	-2.218	.110	.224
5.25	.398	-1.762	.109	.208
4.19	.305	-1.331	.108	.207
3.12	.217	-.920	.106	.208
2.06	.135	-.546	.104	.209
1.51	.095	-.372	.102	.210
.98	.059	-.222	.102	.215
.46	.027	-.103	.102	.218
-.06	-.004	.019	.101	.216
-.60	-.036	.137	.101	.214
-1.13	-.067	.251	.101	.212
-1.65	-.105	.415	.101	.208
-2.17	-.145	.595	.101	.209
-3.25	-.226	.974	.102	.204
-4.30	-.309	1.374	.103	.205

Table 53. Aerodynamic Coefficients for Configuration B1T14X2

M = .80 Q = 5.700 RN = .3810

ALP	CN	CM	CAB	CAF
-4.23	-.301	1.785	.137	.200
-3.17	-.226	1.365	.133	.201
-2.10	-.149	.890	.131	.202
-1.04	-.068	.440	.127	.202
.02	.010	-.000	.123	.200
1.07	.089	-.441	.127	.199
2.14	.166	-.905	.129	.193
3.20	.252	-1.404	.133	.188
4.26	.328	-1.841	.140	.171
6.40	.502	-2.831	.153	.167
.02	.010	-.006	.127	.195

M = .90 Q = 6.520 RN = .4010

ALP	CN	CM	CAB	CAF
-4.26	-.284	1.622	.084	.237
-3.19	-.203	1.115	.080	.237
-2.12	-.119	.630	.077	.242
-1.04	-.055	.340	.079	.255
.02	.014	-.032	.080	.249
1.09	.080	-.440	.081	.246
2.16	.155	-.762	.081	.241
3.23	.225	-1.115	.084	.234
4.30	.312	-1.632	.092	.226
6.46	.489	-2.632	.107	.215
.02	.012	-.019	.079	.247

M = .95 Q = 6.750 RN = .4090

ALP	CN	CM	CAB	CAF
-4.30	-.375	2.453	.119	.258
-3.21	-.277	1.844	.114	.266
-2.13	-.184	1.270	.111	.273
-1.06	-.091	.680	.114	.267
.02	.006	.029	.111	.270
1.10	.104	-.601	.112	.268
2.18	.207	-1.280	.119	.261
3.26	.302	-1.882	.128	.250
4.34	.400	-2.496	.137	.241
6.52	.605	-3.738	.158	.228
.02	.008	.015	.110	.268
-2.13	-.183	1.262	.112	.267

M = 1.00 Q = 7.090 RN = .4190

ALP	CN	CM	CAB	CAF
-4.29	-.321	1.981	.181	.296
-3.22	-.247	1.554	.176	.274
-2.13	-.159	1.030	.173	.274
-1.06	-.077	.541	.176	.275
.02	.014	-.029	.176	.276
1.10	.100	-.552	.177	.269
2.18	.182	-1.044	.182	.264
3.27	.278	-1.613	.189	.267
4.35	.363	-2.114	.196	.252
6.54	.573	-3.409	.211	.239
.02	.009	.003	.178	.269

M = 1.05 Q = 7.460 RN = .4220

ALP	CN	CM	CAB	CAF
-4.33	-.348	2.122	.230	.293
-3.25	-.270	1.674	.225	.290
-2.17	-.189	1.206	.224	.290
-1.07	-.084	.583	.223	.320
.01	-.005	.122	.224	.308
1.09	.072	-.316	.225	.318
2.18	.155	-.792	.228	.305
3.27	.243	-1.299	.232	.305
4.34	.318	-1.721	.238	.289
6.56	.542	-3.089	.250	.307
2.17	.152	-.774	.228	.293

M = 1.10 Q = 7.700 RN = .4230

ALP	CN	CM	CAB	CAF
-4.33	-.333	2.021	.213	.297
-3.20	-.205	1.245	.205	.341
-2.15	-.168	1.095	.203	.305
-1.07	-.091	.652	.205	.302
.03	.000	.055	.201	.305
1.12	.092	-.435	.205	.301
2.21	.181	-.942	.209	.296
3.30	.266	-1.425	.215	.292
4.39	.349	-1.897	.219	.290
6.59	.555	-3.141	.230	.280
2.20	.177	-.917	.210	.296
.04	.016	.000	.203	.299

M = 1.30 Q = 8.400 RN = .4160

ALP	CN	CM	CAB	CAF
-4.32	-.285	1.657	.203	.274
-2.13	-.126	.781	.193	.287
-1.04	-.051	.382	.190	.285
.05	.018	.027	.191	.282
1.14	.088	-.324	.194	.278
2.24	.160	-.681	.198	.276
3.34	.238	-1.070	.204	.276
4.44	.323	-1.516	.209	.269
6.66	.512	-2.593	.219	.273
-3.22	-.202	1.208	.197	.282

M = 1.50 Q = 8.560 RN = .3860

ALP	CN	CM	CAB	CAF
-4.34	-.248	1.186	.197	.285
-2.12	-.086	.395	.192	.299
-1.03	-.031	.190	.190	.293
.06	.024	-.016	.192	.288
1.15	.082	-.240	.194	.286
2.25	.155	-.571	.198	.278
3.37	.244	-1.027	.200	.274
4.49	.337	-1.527	.200	.275
6.74	.554	-2.742	.220	.274
-3.24	-.168	.779	.195	.276

M = 1.75 Q = 6.200 RN = .3500

ALP	CN	CM	CAB	CAF
8.98	.693	-3.343	.225	.250
7.87	.570	-2.600	.223	.247
6.76	.461	-2.108	.215	.247
5.66	.370	-1.664	.209	.247
4.58	.292	-1.293	.205	.245
3.49	.211	-.896	.202	.246
2.41	.129	-.473	.200	.241
1.84	.087	-.266	.199	.243
1.32	.056	-.130	.200	.243
.75	.029	-.051	.202	.247
.23	.008	-.015	.202	.246
-.29	-.010	.013	.201	.248
-.83	-.036	.076	.202	.245
-1.36	-.064	.196	.203	.243
-1.89	-.102	.380	.203	.245
-2.97	-.187	.824	.201	.245
-4.05	-.265	1.207	.202	.245

M = 2.00 Q = 5.850 RN = .3500

ALP	CN	CM	CAB	CAF
8.81	.707	-3.414	.190	.232
7.69	.577	-2.721	.190	.232
6.58	.471	-2.186	.188	.232
5.49	.384	-1.786	.184	.232
4.41	.312	-1.494	.179	.239
3.33	.240	-1.186	.173	.236
2.25	.167	-.856	.168	.236
1.69	.127	-.692	.167	.236
1.15	.080	-.389	.166	.237
.62	.038	-.164	.166	.238
.08	.003	-.010	.166	.239
-.45	-.025	.101	.168	.233
-.99	-.068	.328	.170	.230
-1.53	-.113	.572	.172	.227
-2.06	-.155	.792	.174	.226
-3.13	-.229	1.140	.175	.229
-4.23	-.301	1.455	.177	.230

M = 2.50 Q = 4.930 RN = .3100

ALP	CN	CM	CAB	CAF
8.72	.754	-3.636	.146	.229
7.63	.604	-2.787	.147	.228
6.53	.486	-2.192	.145	.222
5.45	.397	-1.806	.142	.229
4.38	.330	-1.586	.140	.221
3.31	.259	-1.311	.137	.223
2.24	.173	-.878	.134	.221
1.68	.126	-.631	.132	.224
1.14	.086	-.430	.131	.223
.62	.046	-.230	.130	.226
.09	.005	-.023	.130	.226
-.44	-.032	.162	.130	.224
-.97	-.071	.351	.130	.225
-1.50	-.114	.573	.131	.220
-2.03	-.158	.807	.132	.220
-3.11	-.245	1.248	.133	.219
-4.19	-.322	1.582	.133	.224

M = 3.00 Q = 4.130 RN = .3100

ALP	CN	CM	CAB	CAF
8.52	.790	-3.882	.107	.220
7.44	.643	-3.093	.107	.226
6.35	.504	-2.333	.106	.233
5.28	.410	-1.923	.106	.227
4.21	.330	-1.606	.105	.231
3.15	.241	-1.165	.105	.224
2.09	.151	-.705	.104	.235
1.53	.104	-.449	.104	.222
1.00	.064	-.263	.104	.218
.48	.029	-.106	.103	.222
-.04	-.003	.013	.102	.227
-.57	-.037	.144	.101	.218
-1.10	-.067	.271	.101	.219
-1.62	-.114	.516	.103	.217
-2.16	-.156	.734	.103	.218
-3.21	-.241	1.167	.104	.213
-4.27	-.329	1.590	.105	.215

Table 54. Aerodynamic Coefficients for Configuration B1T14X5

M = .80 Q = 5.700 RN = .3810

ALP	CN	CM	CAB	CAF
-4.22	-.284	1.686	.148	.206
-3.16	-.207	1.228	.140	.209
-2.10	-.137	.845	.133	.212
.02	.016	-.042	.128	.208
1.08	.092	-.477	.132	.204
2.14	.165	-.897	.140	.193
3.20	.246	-1.359	.153	.193
4.26	.324	-1.807	.157	.187
6.39	.493	-2.780	.180	.187
-1.04	-.056	.381	.130	.212

M = .90 Q = 6.520 RN = .4010

ALP	CN	CM	CAB	CAF
-4.24	-.256	1.377	.101	.255
-3.17	-.181	.974	.090	.263
-2.11	-.128	.779	.093	.260
-1.04	-.060	.418	.088	.265
.02	.015	-.029	.089	.256
1.10	.099	-.520	.096	.251
2.16	.176	-.957	.107	.244
3.23	.256	-1.435	.118	.229
4.30	.329	-1.817	.128	.221
6.45	.490	-2.696	.132	.216
-4.24	-.264	1.443	.106	.247

M = .95 Q = 6.750 RN = .4090

ALP	CN	CM	CAB	CAF
-4.27	-.329	2.106	.148	.270
-3.19	-.237	1.529	.136	.275
-2.12	-.148	.972	.123	.284
-1.05	-.070	.493	.117	.283
.02	.011	-.001	.121	.277
1.10	.097	-.520	.124	.271
2.17	.173	-.972	.141	.261
3.24	.264	-1.528	.150	.250
4.32	.344	-2.166	.164	.241
6.49	.581	-3.568	.175	.234
.03	.019	-.051	.118	.282

M = 1.00 Q = 7.090 RN = .4190

ALP	CN	CM	CAB	CAF
-4.28	-.306	1.842	.217	.280
-3.20	-.219	1.320	.211	.280
-2.12	-.136	.843	.201	.282
-1.05	-.062	.424	.195	.282
.03	.015	-.028	.196	.291
1.10	.091	-.461	.202	.278
2.18	.171	-.921	.215	.268
3.26	.256	-1.427	.233	.253
4.34	.346	-1.975	.246	.248
6.52	.567	-3.407	.253	.239
-3.20	-.216	1.314	.206	.278

M = 1.05 Q = 7.460 RN = .4220

ALP	CN	CM	CAB	CAF
-4.30	-.313	1.857	.244	.277
-3.21	-.220	1.295	.235	.297
-2.14	-.143	.865	.225	.311
-1.06	-.075	.506	.223	.313
.02	-.002	.100	.222	.315
1.08	.061	-.237	.223	.300
2.17	.150	-.746	.236	.299
3.26	.231	-1.215	.250	.293
4.34	.320	-1.754	.263	.287
6.52	.530	-3.111	.275	.249
.02	.001	.076	.222	.315
-2.14	-.148	.893	.225	.309

M = 1.10 Q = 7.700 RN = .4230

ALP	CN	CM	CAB	CAF
-4.31	-.319	1.939	.224	.315
-3.22	-.233	1.424	.217	.312
-2.14	-.155	.989	.206	.315
-1.06	-.082	.595	.205	.315
.02	-.006	.164	.203	.316
1.10	.066	-.228	.205	.312
2.18	.144	-.668	.218	.304
3.27	.229	-1.162	.233	.293
4.36	.321	-1.719	.246	.283
6.56	.545	-3.156	.257	.284
2.18	.146	-.685	.218	.306
-2.14	-.154	.977	.208	.313

M = 1.30 Q = 8.400 RN = .4160

ALP	CN	CM	CAB	CAF
-4.33	-.257	1.322	.224	.282
-3.23	-.180	.928	.214	.278
-2.14	-.115	.639	.208	.275
-1.05	-.058	.411	.202	.276
.03	-.003	.191	.201	.275
1.12	.057	-.074	.205	.277
2.21	.115	-.300	.216	.271
3.31	.190	-.683	.229	.260
4.41	.276	-1.151	.235	.263
6.64	.496	-2.490	.250	.265
-2.13	-.112	.612	.210	.278
.04	.003	.143	.198	.285

M = 1.50 Q = 8.560 RN = .3860

ALP	CN	CM	CAB	CAF
-4.36	-.236	1.003	.217	.289
-3.25	-.153	.571	.213	.292
-2.15	-.090	.311	.211	.295
-1.06	-.048	.260	.206	.299
.03	-.009	.236	.205	.298
1.12	.033	.175	.204	.302
2.22	.092	-.029	.210	.299
3.33	.180	-.486	.214	.294
4.45	.273	-1.008	.221	.287
6.70	.497	-2.322	.246	.274
6.70	.501	-2.343	.250	.270
-4.35	-.236	1.009	.222	.284

M = 1.75 Q = 6.200 RN = .3500

ALP	CN	CM	CAB	CAF
9.31	.701	-3.321	.246	.250
8.21	.569	-2.951	.246	.248
7.09	.444	-1.815	.242	.248
5.99	.344	-1.273	.235	.251
4.91	.259	-.839	.227	.245
3.82	.181	-.450	.218	.247
2.74	.101	-.049	.214	.250
2.18	.066	.099	.211	.254
1.65	.038	.205	.210	.255
1.10	.017	.194	.212	.255
.57	.011	.090	.213	.253
.05	.002	-.008	.215	.250
-.49	-.009	-.074	.217	.246
-1.02	-.035	-.300	.217	.243
-1.55	-.088	.134	.218	.241
-2.65	-.145	.519	.218	.244
-3.73	-.226	.917	.217	.247

M = 2.00 Q = 5.850 RN = .3500

ALP	CN	CM	CAB	CAF
8.82	.701	-3.418	.200	.251
6.60	.446	-1.971	.200	.242
5.51	.352	-1.486	.194	.237
4.43	.278	-1.163	.187	.237
7.70	.565	-2.648	.201	.248
3.35	.207	-.860	.179	.237
2.27	.140	-.579	.172	.238
1.72	.104	-.426	.167	.236
1.18	.071	-.289	.167	.237
.04	.043	-.200	.168	.237
.11	.008	-.049	.168	.237
-.43	-.024	.092	.167	.235
-.97	-.064	.297	.168	.234
-1.49	-.091	.368	.165	.236
-2.02	-.122	.493	.167	.236
-3.10	-.193	.809	.174	.235
-4.17	-.262	1.097	.130	.238

M = 2.50 Q = 4.930 RN = .3100

ALP	CN	CM	CAB	CAF
8.68	.770	-3.849	.132	.237
7.58	.614	-2.927	.132	.245
6.49	.480	-2.166	.134	.241
5.42	.390	-1.752	.133	.235
4.35	.326	-1.570	.127	.229
3.27	.252	-1.275	.120	.229
2.21	.173	-.911	.118	.231
1.65	.129	-.685	.115	.228
1.12	.087	-.463	.114	.236
.58	.046	-.244	.113	.236
.06	.005	-.028	.113	.235
-.47	-.037	.200	.113	.231
-1.02	-.079	.421	.113	.233
-1.54	-.121	.643	.111	.228
-2.06	-.162	.854	.111	.231
-3.13	-.240	1.209	.113	.230
-4.20	-.315	1.514	.115	.236

M = 3.00 Q = 4.130 RN = .3100

ALP	CN	CM	CAB	CAF
8.50	.814	-4.160	.097	.228
7.42	.665	-3.340	.097	.224
6.33	.529	-2.576	.097	.223
5.28	.423	-2.065	.095	.218
4.19	.331	-1.635	.092	.215
3.12	.243	-1.218	.089	.227
2.08	.160	-.810	.087	.218
1.52	.115	-.588	.085	.215
.98	.075	-.389	.083	.218
.46	.033	-.169	.082	.215
-.06	-.005	.032	.081	.220
-.59	-.041	.202	.081	.217
-1.12	-.089	.460	.081	.217
-1.64	-.123	.622	.081	.217
-2.17	-.166	.841	.082	.214
-3.23	-.257	1.302	.083	.215
-4.31	-.337	1.672	.085	.216

DISTRIBUTION LIST

	Number of Copies
U. S. Army Missile Command Distribution List A for Technical Reports (11 March 1963)	84
Defense Documentation Center Cameron Station Alexandria, Virginia - 22314	20
Director of Defense Research and Engineering (OSD) Attn: Tech Library Room 3C128, The Pentagon Washington 25, D. C.	1
Commanding General U. S. Army Material Command Attn: AMCRD-RS-PE-Bal Research and Development Directorate Washington 25, D. C.	1
Commanding General Picatinny Arsenal Attn: ORDBB-VC 3, Mr. A. A. Loeb Dover, New Jersey	1
Commanding Officer Frankford Arsenal Attn: 0270 - Library Philadelphia 37, Pennsylvania	1
Commanding Officer Ballistic Research Laboratories Attn: AMXBR-E Aberdeen, Maryland	2
Chief, Bureau of Naval Weapons Attn: DIS-33 Department of the Navy Washington 25, D. C.	3
Naval Supersonic Laboratory Massachusetts Institute of Technology Attn: Mr. Frank Durgin 560 Memorial Drive Cambridge 39, Massachusetts	1
Chief of Naval Material Attn: Code M422 Department of the Navy Washington 25, D. C.	1
AFSWC (SWK, SWUND) Kirkland Air Force Base New Mexico	1

	Number of Copies
Commanding Officer and Director Attn: Aerodynamics Laboratory David W. Taylor Model Basin Washington 7, D. C.	1
Director, National Aeronautics and Space Administration Attn: Technical Library Ames Research Center Moffett Field, California	5
Director, National Aeronautics and Space Administration Attn: Technical Library Langley Research Center Langley Field, Virginia	5
Director, National Aeronautics and Space Administration Attn: Technical Library Lewis Research Center Cleveland, Ohio	5
Director, National Bureau of Standards Attn: G. B. Schubauer 232 Dynamometer Bldg Washington 25, D. C.	1
U. S. Atomic Energy Commission Technical Information Service Extension P.O. Box 62 Oak Ridge, Tennessee	1
National Science Foundation Attn: Dr. R. Seeger Washington 25, D. C.	1
Applied Physics Laboratory The Johns Hopkins University Attn: Mr. G. L. Seielstad 8621 Georgia Avenue Silver Spring, Maryland	1
Autonetics, A Division of North American Aviation, Inc. 9150 E. Imperial Highway Downey, California	1
AVCO Manufacturing Corp. Advance Development Division Research Laboratory 2385 Revere Beach Parkway Everett 49, Massachusetts	1

DISTRIBUTION LIST (Continued)

	Number of Copies
Armour Research Foundation Illinois Institute of Technology Center Chicago, Illinois	1
Aerojet-General Corporation Attn: Technical Information Office Sacramento Plants (Liquid and Solid Rocket Motors) P.O. Box 1947 Sacramento, California	1
American Bosch Arma Corporation Attn: Technical Library Roosevelt Field Garden City, New York	1
Bell Aircraft Corporation P.O. Box 1 Attn: Librarian Buffalo 5, New York	1
Bell Telephone Laboratories, Inc. Attn: Director of Military Systems Development Whippany, New Jersey	1
Bendix Corporation Attn: Reports Library Research Laboratories Division P.O. Box 5115 Detroit 35, Michigan	1
Boeing Company Attn: Library Unit Chief P.O. Box 3707 Seattle 24, Washington	2
Bendix Mishawaka Division Attn: Technical Librarian Bendix Corporation 400 South Beiger Street Mishawaka, Indiana	1
Battelle Memorial Institute 505 King Avenue Columbus 1, Ohio	1
Bendix-Corporation Bendix Systems Division Ann Arbor, Michigan	1
Beech Aircraft Corporation Wichita 1, Kansas	1
CONVAIR, A Division of General Dynamics Corporation P.O. Box 1950 San Diego 12, California	1

	Number of Copies
Cornell Aeronautical Laboratory, Inc. Attn: Librarian Buffalo, New York	1
CONVAIR, A Division of General Dynamics Corporation Attn: Engineering Librarian Fort Worth 1, Texas	1
Chance Vought Aircraft, Inc. P.O. Box 5807 Dallas, Texas	1
CONVAIR, A Division of General Dynamics Corporation Attn: Division Library Pomona, California	1
Chrysler Corporation Attn: Technical Library Missile Operations P.O. Box 2628 Detroit 31, Michigan	1
Convair-Astronautics, Division of General Dynamics Corporation Attn: Chief Librarian San Diego 12, California	1
Douglas Aircraft Company Attn: Chief Engineer, Missiles and Space Systems 3000 Ocean Park Blvd Santa Monica, California	1
Douglas Aircraft Company Attn: R. L. Coleman, Aero Section 1820 Statesville, Avenue Charlotte, North Carolina	1
Documentation Inc. Man-Machine Information Center 2521 Connecticut Avenue, N. W. Washington 8, D. C.	1
Electronics Defense Laboratory Sylvania Electric Products, Inc. P.O. Box 205 Mountain View, California	1
Fairchild Engine and Airplane Corporation Fairchild Astronics Division Wyandanch, Long Island New York	1

DISTRIBUTION LIST (Continued)

	Number of Copies
Fairchild Stratos Corporation Aircraft-Missiles Division Attn: Sarah M. Thomas Library Hagerstown, Maryland	1
Goodyear Aircraft Corporation Akron 15, Ohio	1
General Electric Company Aircraft Products Department Lakeside Avenue Burlington, Vermont	1
Grumman Aircraft Engineering Corporation Attn: Director, Engineering Library, Plant 5 Bethpage, Long Island, New York	1
General Electric Company Attn: Technical Information Services Technical Military Planning Operation Box 535 Santa Barbara, California	1
General Electric Company Missile and Ordnance Systems Department 3198 Chestnut Street Philadelphia, Pennsylvania	1
General Electric Company FPD Technical Information Center Mail Stop F-22 Cincinnati 15, Ohio	1
Hughes Aircraft Company Attn: Documents Group Technical Library Florence Avenue at Teale Street Culver City, California	1
Institute for Defense Analyses Research and Engineering Support Division 1825 Connecticut Avenue, N. W. Washington, D. C.	1
Lockheed Aircraft Corporation Attn: Technical Information Center Missiles 1 Space Division P. O. Box 504 Sunnydale, California	1
Librascope, Inc. 808 Western Avenue Glendale 1, California	1
McDonnell Aircraft Corporation P. O. Box 516 St. Louis 3, Missouri	1

	Number of Copies
The Martin Company Attn: Librarian Orlando Division Orlando, Florida	1
The Martin Company Attn: Research Library Denver Division P. O. Box 179 Denver 1, Colorado	1
The Mitre Corporation 244 Wood Street Lexington 73, Massachusetts	1
Marquardt Aircraft Company 16555 Saticoy Street P. O. Box 2013 South Annex Van Nuys, California	1
Northrop Corporation Attn: Technical Information Norair Division 1001 East Broadway Hawthorne, California	1
North American Aviation, Inc. Attn: Missile Development Division 12214 Lakewood Blvd Downey, California	1
Nortronics, A Division of Northrop Aircraft, Inc. Attn: Technical Information Center 222 North Prairie Avenue Hawthorne, California	1
Raytheon Company Missiles Systems Division Bristol, Tennessee	1
Reeves Instrument Corporation East Gate Blvd Garden City, Long Island, New York	1
Raytheon Company Attn: Librarian Missile Systems Division Bedford, Massachusetts	1
Republic Aviation Corporation Attn: Manager, Contracts and Liaison Guided Missiles Division Mineola, Long Island, New York	1
Radio Corporation of America Missile and Surface Radar Department Moorestown, New Jersey	1
Raytheon Company Attn: Librarian Andover Plant Haverhill Street Andover, Massachusetts	1

DISTRIBUTION LIST (Continued)

	Number of Copies
Radioplane, A Division of Northrop Corporation P.O. Box 511 Van Nuys, California	1
Ryan Aeronautical Company Attn: Chief Librarian Lindbergh Field San Diego 12, California	1
Republic Aviation Corporation Military Contract Department Farmingdale, Long Island, New York	1
Sylvania Electric Products, Inc. Waltham Laboratory Library Attn: Librarian 100 First Avenue Waltham 54, Massachusetts	1
Sperry Utah Engineering Laboratory 322 North 21st Street, West Salt Lake City 16, Utah	1
System Development Corporation Attn: Librarian 2500 Colorado Avenue Santa Monica, California	1
Sanders Associates, Inc. Document Library 95 Canal Street Nashua, New Hampshire	1
TEMCO Aircraft Corporation Attn: Engineering Library P.O. Box 6191 Dallas, Texas	1
United Aircraft Corporation Missile and Space Division 400 Main Street East Hartford 8, Connecticut	1
United Aircraft Corporation Research Department East Hartford 8, Connecticut	1
Vitro Laboratories Division of Vitro Corporation of America Attn: Librarian 14000 Georgia Avenue Silver Spring, Maryland	1
Wright Aeronautical Division Attn: Sales Department (Govt.) Curtiss-Wright Corporation Wood-Ridge, New Jersey	1

	Number of Copies
Brown University Attn: Dr. R. Probstein, Graduate Division of Applied Mathematics Attn: Professor William Prager, Chairman Physical Sciences Council Providence 12, Rhode Island	2
Catholic University of America Attn: Professor K. F. Herzfeld Professor M. Munk Department of Physics Washington 17, D. C.	1
Auburn University Attn: Department of Aerospace Engineering Auburn, Alabama	1
University of Alabama Attn: Department of Aerospace Engineering Tuscaloosa, Alabama	1
Case Institute of Technology Attn: Dr. G. Kuerti Cleveland, Ohio	1
California Institute of Technology Guggenheim Aeronautical Laboratory Attn: Professor H. W. Leipman Pasadena 4, California	1
University of California at Berkeley Attn: Professor S. A. Schaaf Berkeley, California	1
University of California at Los Angeles Attn: Dr. L. M. Boelter Department of Engineering Los Angeles 24, California	1
University of Southern California Engineering Center Los Angeles 7, California	1
University of Chicago Attn: Librarian Laboratories for Applied Sciences Museum of Science and Industry Chicago 37, Illinois	1
Cornell University Attn: Dr. W. R. Sears Graduate School of Aeronautical Engineering Ithaca, New York	2

DISTRIBUTION LIST (Continued)

	Number of Copies
Harvard University Attn: Professor H. W. Emmons Dr. A. Bryson Professor G. E. Carrier Department of Applied Physics and Engineering Science Cambridge 38, Massachusetts	3
University of Illinois Attn: Professor C. H. Fletcher Department of Aeronautical Engineering Attn: Dr. H. H. Korst Engineering Experimental Station Urbana, Illinois	2
American Institute of Aeronautics and Astronautics Attn: Library 2 East 64th Street New York 21, New York	1
The Johns Hopkins University Attn: Dr. L. Kosvasznay Professor F. H. Clauser, Jr. Department of Aeronautical Engineering Attn: Dr. S. Corrsin Department of Mechanical Engineering Baltimore 17, Maryland	3
Kansas State University Attn: Professor W. Tripp Department of Mechanical Engineering Manhatten, Kansas	1
Lehigh University Attn: Dr. R. Emrich Physics Department Bethlehem, Pennsylvania	1
University of Maryland Attn: Director, Institute of Fluid Dynamics and Applied Mechanics Attn: S. F. Shen, Department of Aeronautical Engineering College Park, Maryland	2
University of Michigan Institute of Science and Technology Attn: Technical Documents Service Ann Arbor, Michigan	1
Massachusetts Institute of Technology Attn: Professor J. R. Markham Department of Aeronautical Engineering Cambridge 39, Massachusetts	1
University of Michigan Attn: Dr. Arnold Kuethe Department of Aeronautical Engineering East Engineering Bldg Ann Arbor, Michigan	1
University of Minnesota Attn: Department of Aeronautical Engineering Department of Mechanical Engineering, Division of Thermodynamics Minneapolis 14, Minnesota	2
Midwest Research Institute Attn: M. Goland, Director for Engineering Sciences 4049 Pennsylvania Kansas City 11, Missouri	1
New York University Attn: Dr. R. W. Courant, Institute of Mathematics and Mechanics Attn: Dr. J. F. Ludloff, Department of Aeronautics Attn: Dr. A. Ferri, Porfessor of Aeronautics and Astronautics 45 Fourth Street New York 53, New York	3
North Carolina State College Attn: Professor R. M. Pinkerton Department of Engineering Raleigh, North Carolina	1
Ohio State University Attn: Professor G. L. von Eschen Aeronautical Engineering Department Columbus, Ohio	1
Pennsylvania State College Attn: Professor M. Lessen Department of Aeronautical Engineering State College, Pennsylvania	1
Polytechnic Institute of Brooklyn Attn: Dr. M. H. Bloom Aerodynamic Laboratory 527 Atlantic Avenue Freeport, New York	1
Princeton University Attn: Professor S. Bogdonoff Professor W. Hayes Forrestal Research Center Princeton, New Jersey	2
Purdue University Lafayette, Indiana	1

DISTRIBUTION LIST (Concluded)

	Number of Copies
Princeton University Forrestal Research Center Library Project SQUID Princeton, New Jersey	1
The Rice Institute Attn: Professor A. J. Chapman Department of Mechanical Engineering Houston, Texas	1
Rensselaer Polytechnic Institute Attn: Dr. R. P. Harrington Aeronautics Department Troy, New York	1
Rutgers University Attn: Professor R. H. Page Department of Mechanical Engineering New Brunswick, New Jersey	1
Stanford Research Institute Attn: Acquisitions Documents Center Menlo Park, California	1
University of Virginia Ordnance Research Laboratory P.O. Box 3366 University Station Charlottesville, Virginia	1
University of Texas Defense Research Laboratory Attn: Mr. J. B. Oliphint P.O. Box 8029 University Station Austin 12, Texas	2
University of Washington Attn: Professor R. E. Street Department of Aeronautical Engineering Attn: Professor M. E. Childs Department of Mechanical Engineering Seattle 5, Washington	2
University of Virginia Attn: Professor J. W. Beams Department of Physics Charlottesville, Virginia	1
University of Manchester, England Attn: Dr. E. R. Benton	1
Case Institute of Technology Attn: Dr. R. Bolz Cleveland, Ohio	1

	Number of Copies
General Electric Company Attn: Mr. Gerald Hieser Systems Engineering Department 21 South 12th Street Room 514 Philadelphia, Pennsylvania	1
University of Wisconsin Attn: Professor J. O. Hirschfelder Department of Chemistry Madison, Wisconsin	1
California Institute of Technology Attn: Professor C. B. Millikan Director, Guggenheim Aeronautical Laboratory Pasadena 4, California	1
Tulane University Attn: Dr. Henry F. Hrubecky Department of Mechanical Engineering New Orleans 18, Louisiana	1
ARO, Inc. Attn: Mr. Clark H. Lewis Special Project Section Hypervelocity Branch Von Karman Facility Tullahoma, Tennessee	1
Air Force Flight Dynamics Laboratory Attn: Mr. R. D. Neumann FD MG Wright-Patterson AFB, Ohio	1
Director, National Aeronautics and Space Administration Attn: W. Dahm E. Linsley J. Sims Marshall Space Flight Center Redstone Arsenal, Alabama	5
AMSMI-YP, Mr. Williams	1
AMSMI-R, Mr. McDaniel	1
-RD, Mr. Hussey	1
-RDS, Record Copies	2
-RDK, Mr. Deep	2
Mr. Rubin	54
-RBL	1
-RG	1
-RK	1
-RE	1
-RFE, Mr. Garner	1
-RT	1
-RH	1
-RL	1
-RR	1
-RS	1
-RAP	1

UNCLASSIFIED
Security Classification

DOCUMENT CONTROL DATA - R&D

(Security classification of title, body of abstract and indexing annotation must be entered when the overall report is classified)

1. ORIGINATING ACTIVITY (Corporate author) Advanced Systems Laboratory Directorate of R&D U. S. Army Missile Command Redstone Arsenal, Alabama	2a. REPORT SECURITY CLASSIFICATION UNCLASSIFIED 2b. GROUP N/A

3. REPORT TITLE

TABULATED STABILITY DATA FOR A SERIES OF RING TAIL BODY CONFIGURATIONS AT MACH NUMBERS FROM 0.8 TO 4.5

4. DESCRIPTIVE NOTES (Type of report and inclusive dates)

Progress Report

5. AUTHOR(S) (Last name, first name, initial)

Rubin, Donald V.

6. REPORT DATE 15 April 1965	7a. TOTAL NO. OF PAGES 69	7b. NO. OF REFS 2
8a. CONTRACT OR GRANT NO. b. PROJECT NO. (DA) 1S222901A206 c. AMC Management Structure Code No. 5221.11.148 d.	9a. ORIGINATOR'S REPORT NUMBER(S) RD-TR-65-6 9b. OTHER REPORT NO(S) (Any other numbers that may be assigned this report) AD	

10. AVAILABILITY/LIMITATION NOTICES

Qualified requesters may obtain copies of this report from DDC.

11. SUPPLEMENTARY NOTES	12. SPONSORING MILITARY ACTIVITY Same as No. 1

13. ABSTRACT

The static stability characteristics of ring tails on a body of revolution has been investigated during a series of wind tunnel tests. Mach numbers varied from 0.8 to 4.5, and ring diameters varied from 1.25 to 2.50 calibers. This report presents a tabulation of the basic results obtained from the tests.

DD FORM 1 JAN 64 1473

UNCLASSIFIED
Security Classification

UNCLASSIFIED
Security Classification

14. (U) KEY WORDS	LINK A ROLE	LINK A WT	LINK B ROLE	LINK B WT	LINK C ROLE	LINK C WT
ring tail configuration base drag reduction wind tunnel tests						

INSTRUCTIONS

1. ORIGINATING ACTIVITY: Enter the name and address of the contractor, subcontractor, grantee, Department of Defense activity or other organization *(corporate author)* issuing the report.

2a. REPORT SECURITY CLASSIFICATION: Enter the overall security classification of the report. Indicate whether "Restricted Data" is included. Marking is to be in accordance with appropriate security regulations.

2b. GROUP: Automatic downgrading is specified in DoD Directive 5200.10 and Armed Forces Industrial Manual. Enter the group number. Also, when applicable, show that optional markings have been used for Group 3 and Group 4 as authorized.

3. REPORT TITLE: Enter the complete report title in all capital letters. Titles in all cases should be unclassified. If a meaningful title cannot be selected without classification, show title classification in all capitals in parenthesis immediately following the title.

4. DESCRIPTIVE NOTES: If appropriate, enter the type of report, e.g., interim, progress, summary, annual, or final. Give the inclusive dates when a specific reporting period is covered.

5. AUTHOR(S): Enter the name(s) of author(s) as shown on or in the report. Enter last name, first name, middle initial. If military, show rank and branch of service. The name of the principal author is an absolute minimum requirement.

6. REPORT DATE: Enter the date of the report as day, month, year; or month, year. If more than one date appears on the report, use date of publication.

7a. TOTAL NUMBER OF PAGES: The total page count should follow normal pagination procedures, i.e., enter the number of pages containing information.

7b. NUMBER OF REFERENCES: Enter the total number of references cited in the report.

8a. CONTRACT OR GRANT NUMBER: If appropriate, enter the applicable number of the contract or grant under which the report was written.

8b, 8c, & 8d. PROJECT NUMBER: Enter the appropriate military department identification, such as project number, subproject number, system numbers, task number, etc.

9a. ORIGINATOR'S REPORT NUMBER(S): Enter the official report number by which the document will be identified and controlled by the originating activity. This number must be unique to this report.

9b. OTHER REPORT NUMBER(S): If the report has been assigned any other report numbers *(either by the originator or by the sponsor)*, also enter this number(s).

10. AVAILABILITY/LIMITATION NOTICES: Enter any limitations on further dissemination of the report, other than those imposed by security classification, using standard statements such as:

(1) "Qualified requesters may obtain copies of this report from DDC."

(2) "Foreign announcement and dissemination of this report by DDC is not authorized."

(3) "U. S. Government agencies may obtain copies of this report directly from DDC. Other qualified DDC users shall request through _____."

(4) "U. S. military agencies may obtain copies of this report directly from DDC. Other qualified users shall request through _____."

(5) "All distribution of this report is controlled. Qualified DDC users shall request through _____."

If the report has been furnished to the Office of Technical Services, Department of Commerce, for sale to the public, indicate this fact and enter the price, if known.

11. SUPPLEMENTARY NOTES: Use for additional explanatory notes.

12. SPONSORING MILITARY ACTIVITY: Enter the name of the departmental project office or laboratory sponsoring *(paying for)* the research and development. Include address.

13. ABSTRACT: Enter an abstract giving a brief and factual summary of the document indicative of the report, even though it may also appear elsewhere in the body of the technical report. If additional space is required, a continuation sheet shall be attached.

It is highly desirable that the abstract of classified reports be unclassified. Each paragraph of the abstract shall end with an indication of the military security classification of the information in the paragraph, represented as *(TS)*, *(S)*, *(C)*, or *(U)*.

There is no limitation on the length of the abstract. However, the suggested length is from 150 to 225 words.

14. KEY WORDS: Key words are technically meaningful terms or short phrases that characterize a report and may be used as index entries for cataloging the report. Key words must be selected so that no security classification is required. Idenfiers, such as equipment model designation, trade name, military project code name, geographic location, may be used as key words but will be followed by an indication of technical context. The assignment of links, rules, and weights is optional.

UNCLASSIFIED
Security Classification