UNCLASSIFIED

AD 457947

DEFENSE DOCUMENTATION CENTER

FOR

SCIENTIFIC AND TECHNICAL INFORMATION

CAMERON STATION ALEXANDRIA, VIRGINIA

UNCLASSIFIED

DISCLAIMER NOTICE

THIS DOCUMENT IS BEST QUALITY PRACTICABLE. THE COPY FURNISHED TO DTIC CONTAINED A SIGNIFICANT NUMBER OF PAGES WHICH DO NOT REPRODUCE LEGIBLY.

NOTICE: When government or other drawings, specifications or other data are used for any purpose other than in connection with a definitely related government procurement operation, the U. S. Government thereby incurs no responsibility, nor any obligation whatsoever; and the fact that the Government may have formulated, furnished, or in any way supplied the said drawings, specifications, or other data is not to be regarded by implication or otherwise as in any manner licensing the holder or any other person or corporation, or conveying any rights or permission to manufacture, use or sell any patented invention that may in any way be related thereto.

AD No. 457947
DDC FILE COPY

Quarterly Report No. 2

Copy No. 1

(upper case)

"A Study of the Decomposition Mechanism of Ammonium Perchlorate"

Prepared by: ~~Departments of Chemistry and Chemical Engineering~~

Auburn Univ~~ersity~~., Ala.

Quarterly rept. no. 2, 1 Jul-1 Oct

~~For the Period July 1-Sept 1964~~

Contract ~~No.~~ DA-01-009-ORD-1023(Z) ~~[illegible]~~

~~Birmingham Procurement District, U.S. Army~~

DDC
MAR 8 1965
DDC-IRA B

AUBURN UNIVERSITY

AUBURN ALABAMA

36830

AUBURN RESEARCH FOUNDATION

Office of the Director

Telephone 887-5511
Area Code 205

October 15, 1964

Commanding General
U. S. Army Missile Command
Redstone Arsenal, Alabama

Attention: AMSMI-RK

Re: Contract DA-01-009-ORD-1023
Part I
Quarterly Progress Report
1 July - 1 October 1964

Dear Sir:

Quarterly Progress Report on Part I of referenced contract is enclosed. Other copies of this report are being distributed as follows:

1 copy to: U. S. Army Missile Command
Redstone Arsenal, Alabama
Attn: AMSMI-RKP, Mr. W. B. Thomas

1 copy to: U. S. Army Missile Command
Redstone Arsenal, Alabama
Attn: AMCPM-PE-EBA, Mr. H. Epperly

1 copy to: U. S. Army Missile Command
Redstone Arsenal, Alabama
Attn: AMCPM-PE-EAB, Mr. L. Pugho

3 copies to: Chemical Propulsion Information Agency
Johns Hopkins University
Applied Physics Laboratory
Silver Springs, Maryland

2 copies to: National Aeronautics and Space Administration
Head, Operations Section
Scientific & Technical Information Div. (SAK/DL)
P. O. Box 5700
Bethesda, Maryland 20014

In accordance with Exhibit 3, Section III, paragraph 3, a funding summary of Phase I of referenced contract is enclosed.

Sincerely yours,

W. C. Jensen, Jr.
Director

WCJ:eab

Encl:

cc: w/o enclosure: Birmingham Procurement District, U. S. Army
Birmingham, Alabama

Dr. James E. Land

CONTRACT DA-01-009-ORD-1023

FUNDING SUMMARY REPORT - PHASE I

For Period February 22 - September 30, 1964

Salaries and wages	$ 6,720.45
Overhead	2,639.16
Travel	211.40
Communications	25.35
Computer Time and supplies	-
Supplies and equipment	
(1) non-expendable	748.65
(2) expendable	512.09
Total	$10,857.10

QUARTERLY PROGRESS REPORT #2

Birmingham Ordnance Contract DA-01-009-ORD-1023(Z), Part I, entitled,

"A Study of the Decomposition Mechanism of Ammonium Perchlorate"

For the period: 1 July to 1 October 1964

1. Introduction

This study of the decomposition of ammonium perchlorate (hereinafter abbreviated AP) upon the application of heat is employing differential thermal analysis (DTA) to obtain the data needed for the evaluation of activation energies, reaction orders and mechanisms.

In quarterly report #1 we described the process of DTA and developed the mathematical treatment of the measured data which would yield the desired quantities. Also, there was reviewed and summarized the current published thoughts regarding the changes which transpire as AP is heated from 25 to 450°C. Four distinct changes are recognized. These are an endothermic crystal transformation (about 240°C), an endothermic sublimation process (247-347°C), a low temperature exothermic decomposition (below 350°C) and the large, exothermic high temperature decomposition (above 350°C).

Using DTA, the peak temperature (T_m) for each of these processes is measured as a function of the rate of heating (φ). A plot of $\ln(\varphi/T_m^2)$ vs. $1/T_m$ then should give a straight line plot where the slope of the plot is $(-)E/R$, E being the activation energy of the change and R is the universal gas constant.

2. Current Efforts

(a) Equipment

During the period of this report work first was expended on

procuring and assembling the DTA equipment.

The F & M Model 240M Proportional Power Proportioning Temperature Programer, purchased new from the manufacturer, on receipt was found to be defective and repair to faulty wiring caused delay in placing it in operation.

The Mosaley Model 2 X-Y recorder received from a Government Surplus warehouse in California was non-operative and much time was consumed in determining and replacing faulty components.

Fig. #1 is a block diagram showing the components of the DTA equipment being used and their relationships. The heater and block are shown in more detail in Figs. 2(a) and (b). These were constructed in our own shops.

The use of the Sargent SR recorder is to follow the heating rate so that it can be known with certainty at each peak temperature on the DTA plot. Such is necessary as experience has demonstrated that the setting on the temperature programer is only approximate.

Into the block are inserted two glass sample holders as pictured in Fig. #3. These hold the AP (sample cell) and Al_2O_3 (reference cell). After the sample and reference materials are placed into the respective holders and tamped into place, the thermocouple probe, containing the Chromel-Constentan thermocouple, is then pushed through the center of the material. These thermocouples transmit signals to the y-axis of the recorder. Another thermocouple in the block transmits a signal to the x-axis. A correction term, experimentally determined, must be algebraically added to this to obtain the temperature in the center of the reference. It was found that the recorder would not function properly if an attempt

was made to record the signal from the reference thermocouple on the x-axis simultaneously with the signal from the voltage difference being recorded on the y-axis.

The side arm on the sample holder (Fig. #3) allows the sample, while being heated, to be subjected to vacuum, normal atmospheric pressure or increased pressure of an unreactive gas such as nitrogen.

(b) Material

The AP used in the runs reported herein was obtained from the G. Fredrick Smith Chemical Co. of Columbus 22, Ohio, is item #3 in their catalog and is classified as reagent grade. When used from their bottle without further treatment it will be listed as stock material. The material was kept in a desiccator over P_4O_{10} to insure no moisture being absorbed. In an effort to obtain particles of AP of different sizes the stock material was screened through two stainless steel wire mesh sieves. That retained by U.S. 40 mesh will be called coarse, that retained by U.S. 60 mesh will be designated medium while all passing through the 60 mesh will be termed fine.

(c) Results

Before commencing DTA runs with AP we desired to know and have confidence in the performance of our equipment. Samples of ammonium nitrate, benzoic acid, sodium nitrate and silver nitrate were studied and the values for changes compared to those quoted in the literature article of Barstod (Am. Mineralogist, 37, 667 (52)). The following table shows our results and it is felt that most of the determined values agree within reasonable limits to those quoted in the literature.

Compound	Change	$T_{Literature}$	$T_{Measured}$ at heating rate of 2°/min	4°/min	10°/min
NH_4NO_3	Inversion	32 °C	39.1	42.8	38.3
NH_4NO_3	Inversion	85	82.4	87.3	85.5
NH_4NO_3	Inversion	125	124.5	125.4	127
NH_4NO_3	Fusion	170	166.8	166	169
Benzoic acid	Fusion	121.8	123	123	125
$NaNO_3$	Fusion	314	306	306	308
$AgNO_3$	Inversion	160	163	164	168
$AgNO_3$	Fusion	212	208	208	209

During this period we have made 52 separate DTA runs on AP samples at various heating rates and under either atmospheric pressure or partial vacuum.

Instead of recording all the experimental curves obtained the data will be presented in tabular form. In Fig. #4 we have recorded a typical DTA plot. Curve (A) is for AP vs. air while being heated; (B) represents AP vs. partial vacuum. On curve (A) reading from left to right four peaks may be found and will be numbered as shown. Peak #3, an endothermic peak is noted only when stock or coarse material was heated.

As seen in the (B) curve of Fig. #4 only three peaks are noted.

In the following tables, first, is indicated which peak temperature was being measured, the type of AP heated and the atmosphere above the AP.

The columns then show our sample no., the weight of AP added to the sample tube, the peak temperature in degrees Centigrade and Kelvin, the rate of heating in degrees per minute as determined from the S.R. recorder plot, the peak temperature in °K squared, the ratio of the heating rate (ρ) to T_m^2, the reciprocal of the T_m and finally the natural

logarithm of the ratio. On a separate plot, numbered to correspond to the table number is the graphical plot of $\ln(\varphi/T_m^2)$ vs. $1/T_m$ for a selected few of the tables. By estimation, the best straight line has been constructed through the plotted points and the slopes determined. Multiplying these slopes by the value of R (1.99 cal $deg^{-1}mole^{-1}$) gives the activation energies summarized in Table 18.

At this time we feel that insufficient data has been collected to attempt to draw any conclusions. Such will be a part of later discussions.

No attempts have been made yet to determine reaction orders from these data.

(d) Present Plans

Efforts now continue on measuring the DTA diagrams of AP decomposition, where the three particle sizes are run under a nitrogen atmosphere to minimize the sublimation process. Our next step will be to make measurements with various catalysts added to the AP to determine what possible effect such catalytic agents may have on activation energy magnitudes.

James E. Land
Project Supervisor

8 October 1964

Fig. #1

Circuit Diagram

Fig. #1

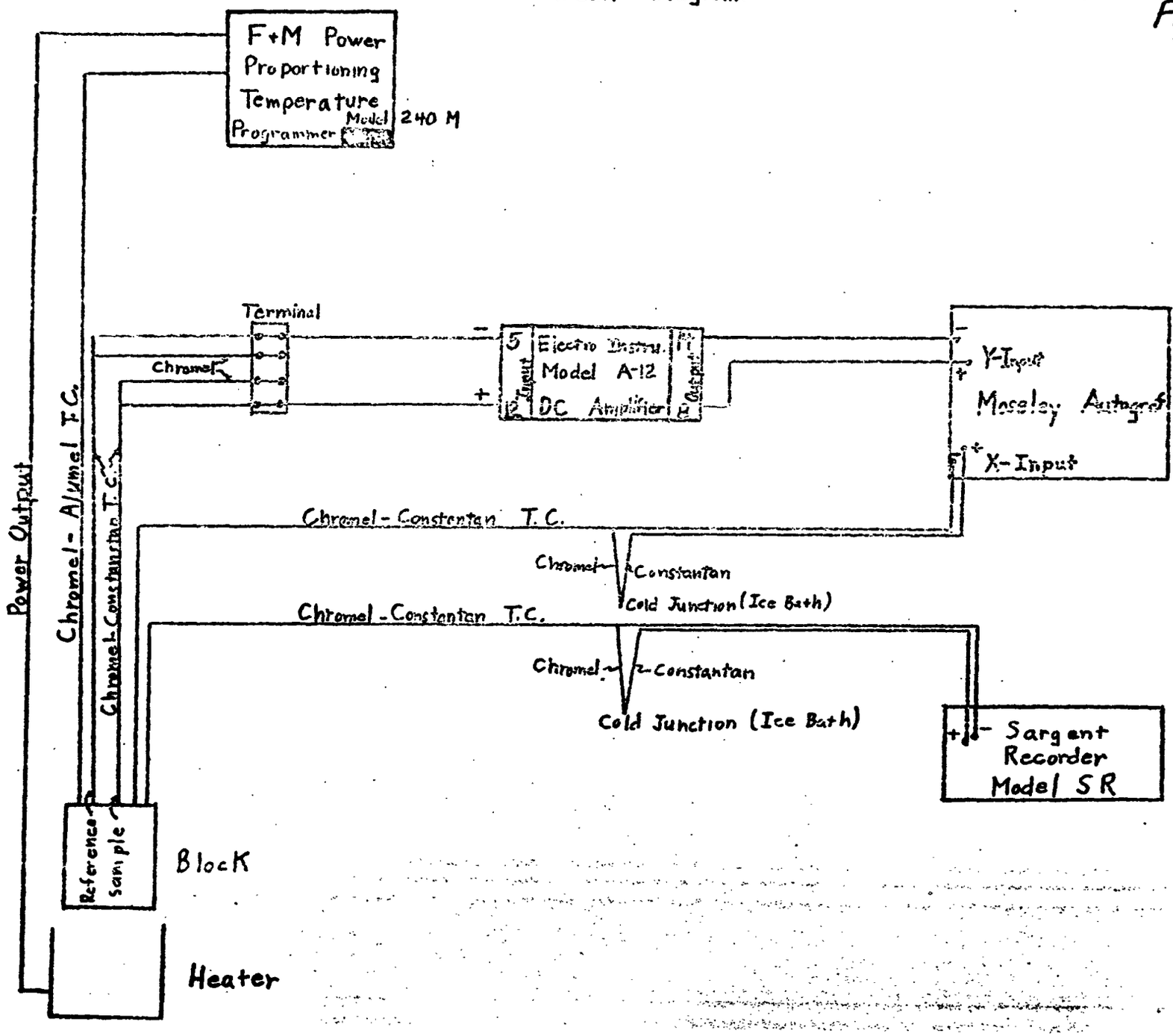

Fig. # 2A

Heater & Block

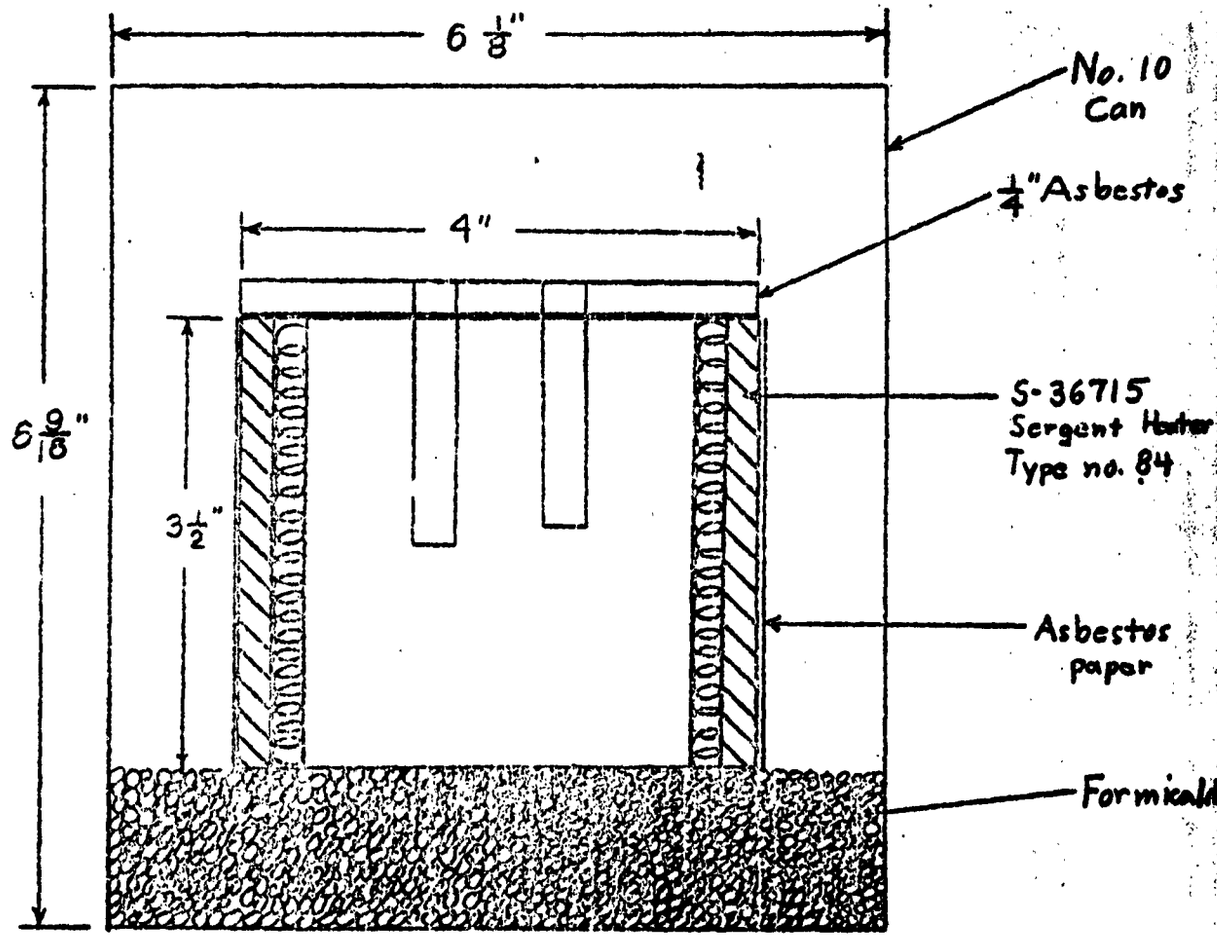

Scale: ~~Full~~ 3/4 Scale

Fig. #2B

ALUMINUM BLOCK

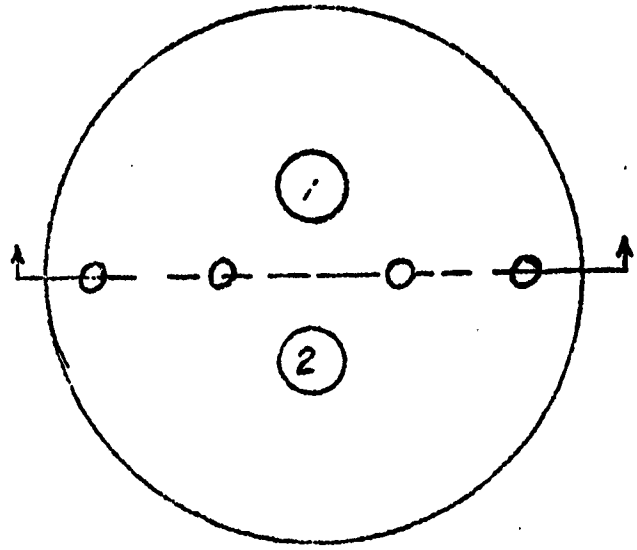

HOLE#1 – Reference
$\frac{3}{8}$" Dia. $1\frac{3}{4}$" Deep

HOLE#2 – Sample
$\frac{3}{8}$" Dia $1\frac{5}{8}$" Deep

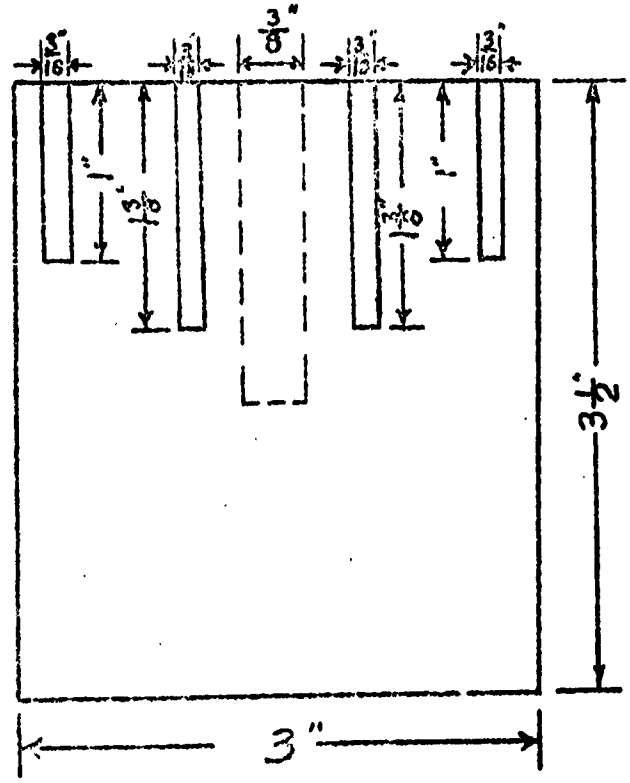

Fig. #3

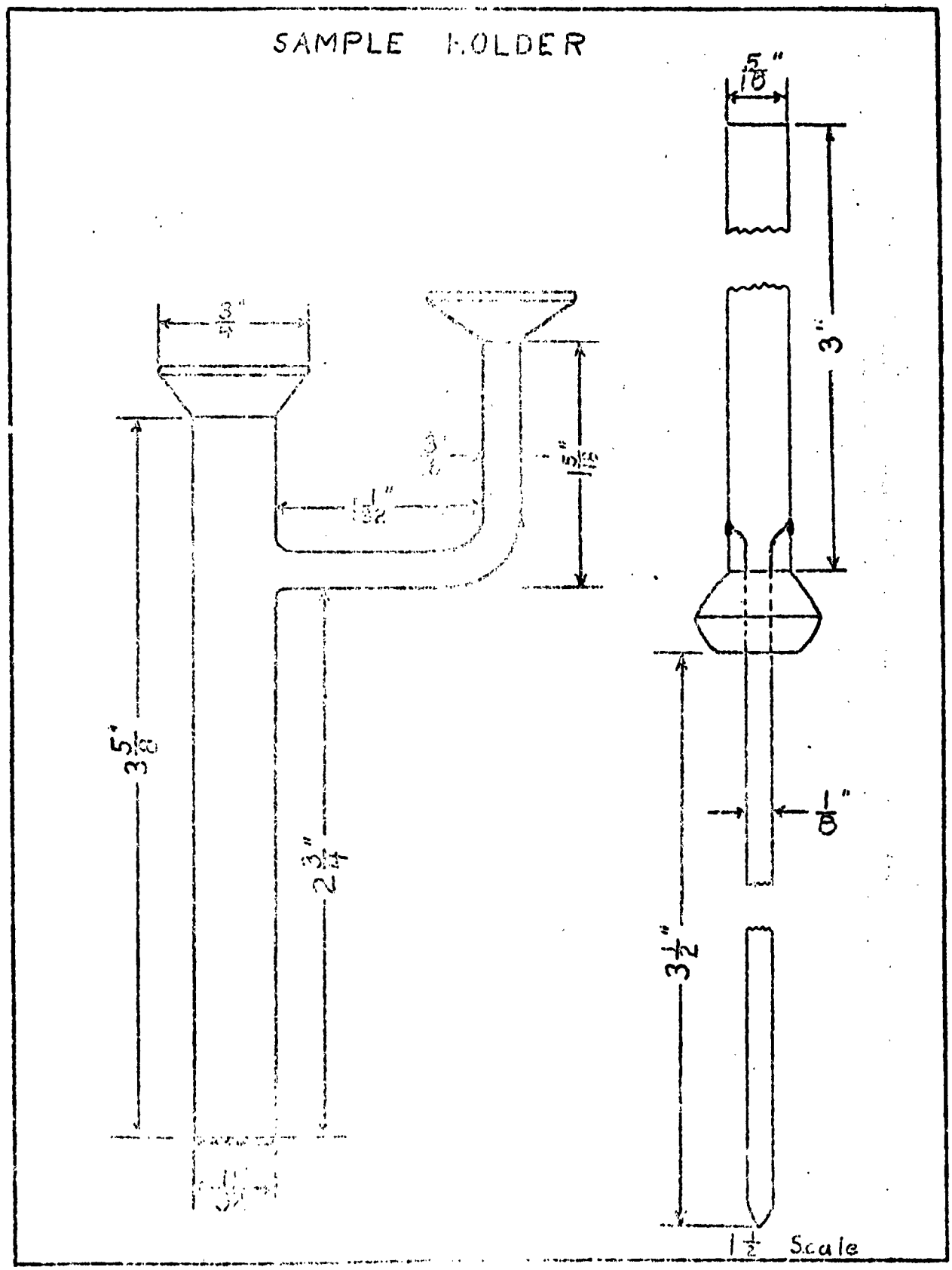

Typical Data Plots Of Ammonium Perchlorate

Figure 4

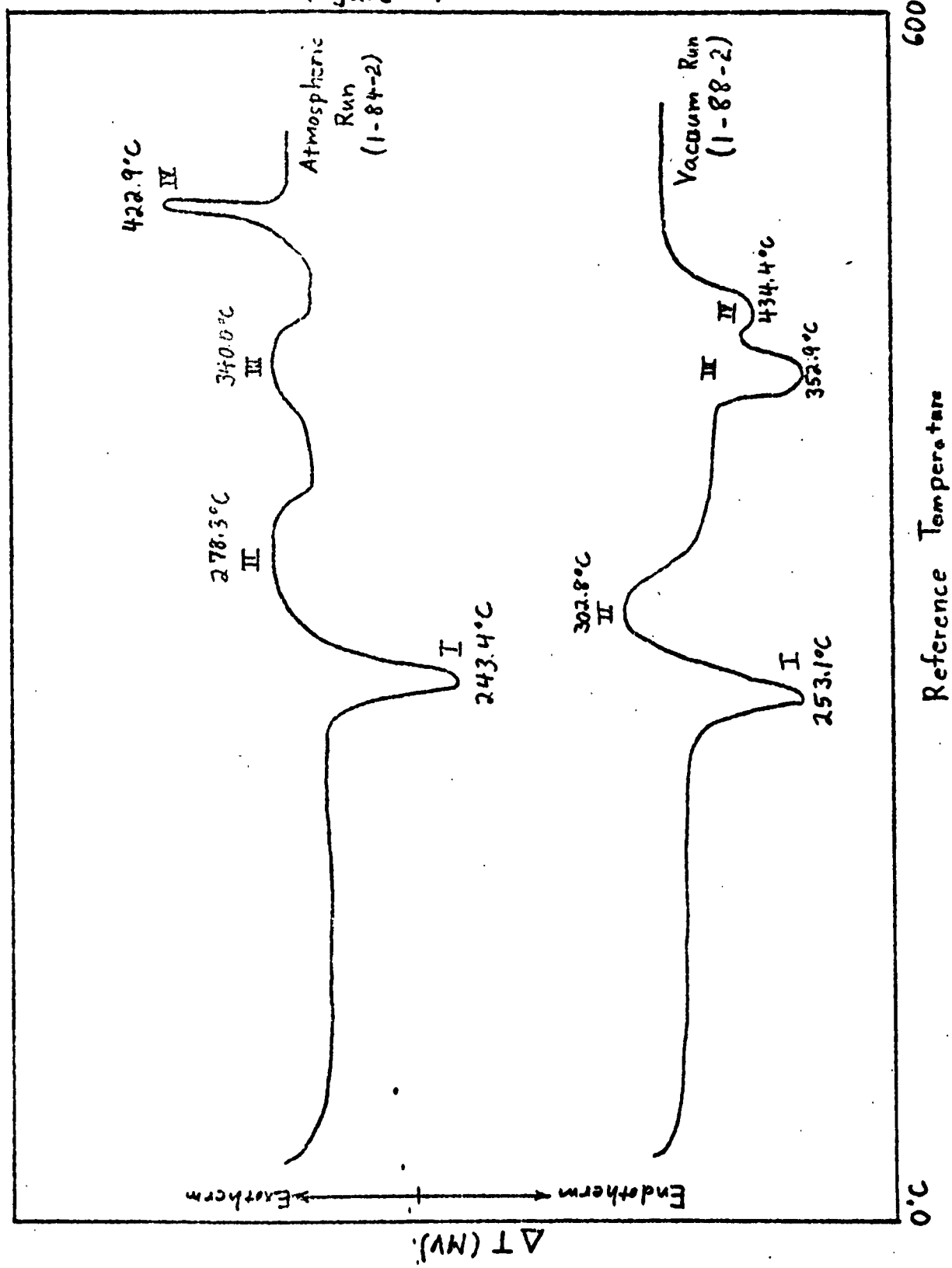

TABLE I

Material: AP (stock material); Peak #1 (Crystal Transformation) - endothermic; Heated vs. atmosphere

Sample #	Sample Wt.(g)	Peak Temp. deg. C	T_m deg. K	Rate deg/min.	T_m^2 (x 10^{-5})	Rate/T_m^2 (x 10^5)	$1/T_m$(x 10^3)	ln(Rate/T_m^2)
1-70-1	0.5006	263.2	536.4	9.60	2.8772	3.336	1.864	-10.308
1-70-2	0.5000	252.9	526.1	4.41	2.7678	1.593	1.901	-11.047
1-71-1	0.4996	240.0	513.20	2.11	2.6337	0.801	1.948	-11.735
1-84-1	0.4994	248.9	522.1	10.03	2.7259	3.680	1.915	-10.210
1-84-2	0.4935	243.4	516.6	4.51	2.6686	1.690	1.936	-10.988
1-84-3	0.4974	240.3	513.5	2.22	2.6368	0.842	1.947	-11.685
1-87-1	0.5067	256.1	529.3	10.40	2.8016	3.712	1.889	-10.201
1-93-1	0.5046	248.9	522.1	4.70	2.7259	1.724	1.915	-10.968
1-94-1	0.5027	262.6	535.8	16.70	2.7101	6.162	1.866	- 9.695
1-94-2	0.5023	262.6	535.8	15.90	2.7101	5.867	1.866	- 9.744
1-96-1	0.4996	245.0	518.2	2.40	2.6853	0.894	1.930	-11.625
1-97-1	0.5028	258.7	531.9	10.30	2.8292	3.641	1.880	-10.225
1-98-1	0.5067	241.1	514.3	13.00	2.6450	4.915	1.944	- 9.921
1-98-2	0.5039	256.8	530.0	10.70	2.8090	3.809	1.887	-10.176
2- 2-1	0.5004	243.4	516.6	2.40	2.6688	0.899	1.936	-11.620
2-10-1	0.2489	243.0	516.2	1.89	2.6646	0.709	1.937	-11.857
2-11-1	0.2513	247.0	520.2	4.45	2.7061	1.644	1.922	-11.016
2-11-2	0.2508	243.0	516.2	1.98	2.6646	0.743	1.937	-11.810
2-11-3	0.2532	251.7	524.9	12.26	2.7552	4.450	1.905	-10.020
2-13-1	0.2514	241.8	515.0	2.23	2.6522	0.841	1.942	-11.686
2-13-2	0.2527	246.2	519.4	4.47	2.6978	1.657	1.925	-11.008
2-13-3	0.2518	252.1	525.3	11.66	2.7594	4.226	1.904	-10.072

TABLE II

Material: AP (stock material); Peak #2 (exothermic); Heated vs. atmosphere

Sample #	Sample Wt. (g)	Peak Temp. deg. C	T_m deg. K	Rate deg/min.	T_m^2 (x 10^{-5})	Rate/T_m^2 (x 10^5)	$1/T_m$ (x 10^3)	ln(Rate/T_m^2)
1-70-1	0.5006	320.0	593.2	9.60	3.5189	2.728	1.686	-10.509
1-70-2	0.5000	291.8	565.0	3.70	3.1923	1.159	1.770	-11.398
1-71-1	0.4996	271.0	544.2	2.00	2.9615	0.675	1.838	-11.906
1-84-1	0.4994	306.0	579.2	8.86	3.3547	2.641	1.727	-10.539
1-84-2	0.4935	278.3	551.5	3.60	3.0415	1.184	1.813	-11.344
1-84-3	0.4974	263.4	536.6	2.13	2.8794	0.740	1.864	-11.814
1-87-1	0.5067	313.7	586.9	8.70	3.4445	2.526	1.704	-10.586
1-93-1	0.5046	287.1	560.3	3.40	3.1394	1.083	1.785	-11.433
1-94-1	0.5027	326.3	599.5	14.70	3.5940	4.090	1.668	-10.104
1-94-2	0.5023	322.5	595.7	11.70	3.5486	3.297	1.679	-10.320
1-97-1	0.5028	316.4	589.6	9.80	3.4763	2.819	1.696	-10.476
1-98-1	0.5067	304.1	577.3	7.60	3.3328	2.280	1.732	-10.689
1-98-2	0.5039	314.9	588.1	10.70	3.4586	3.093	1.700	-10.384
2- 2-1	0.5004	266.5	539.7	2.10	3.9128	0.721	1.853	-11.840
2- 2-2	0.5041	284.0	557.2	3.90	3.1047	1.256	1.795	-11.285
2-11-3	0.2532	312.9	586.1	8.68	3.4351	2.527	1.706	-10.586
2-13-3	0.2518	272.4	545.6	9.44	2.9770	3.171	1.833	-10.359

TABLE III

Material: AP (stock material); Peak #3 (endothermic); Heated vs. atmosphere

Sample #	Sample Wt.(g)	Peak Temp. deg. C	T_m deg. K	Rate deg/min.	T_m^2 (x 10^{-5})	Rate/T_m^2 (x 10^5)	$1/T_m$(x 10^3)	ln(Rate/T_m^2)
1-70-1	0.5006	449.5	722.7	10.15	5.2230	1.9433	1.384	-10.849
1-70-2	0.5000	426.8	700.0	3.48	4.9000	0.7102	1.429	-11.856
1-71-1	0.4996	332.7	605.9	2.11	3.6711	0.5748	1.650	-12.067
1-84-1	0.4994	357.4	630.6	8.44	3.9766	2.1224	1.586	-10.760
1-84-2	0.4935	340.0	613.2	3.80	3.7601	1.0106	1.631	-11.502
1-84-3	0.4974	331.0	604.2	2.14	3.6506	0.5862	1.655	-12.047
1-87-1	0.5067	371.8	645.0	8.50	4.1603	2.0431	1.550	-10.798
1-93-1	0.5046	349.1	622.3	4.20	3.8726	1.0845	1.607	-11.431
1-96-1	0.4996	336.5	609.7	2.30	3.7173	0.6187	1.640	-11.933
2- 2-1	0.5004	336.6	609.8	2.50	3.7186	0.6723	1.640	-11.910
2- 2-2	0.5041	354.4	627.6	4.20	3.9388	1.0663	1.593	-11.449

TABLE IV

Material: AP (stock material); Peak #4 (exothermic); Heated vs. atmosphere

Sample #	Sample Wt.(g)	Peak Temp. deg. C	T_m deg. K	Rate deg/min.	T_m^2 (x 10^{-5})	Rate/T_m^2 (x 10^5)	$1/T_m$(x 10^3)	ln(Rate/T_m^2)
1-71-1	0.4996	428.0	701.2	2.16	4.9168	0.4393	1.426	-12.335

TABLE IV (cont.)

1-84-1	0.4994	439.2	712.4	7.78	5.0751	1.5330	1.404	-11.086
1-84-2	0.4935	422.9	696.1	3.33	4.8456	0.6872	1.437	-11.868
1-84-3	0.4974	409.0	682.2	2.03	4.6540	0.4362	1.466	-12.342
1-87-1	0.5067	447.9	721.1	7.80	5.1999	1.5020	1.387	-11.107
1-93-1	0.5046	435.5	708.7	3.80	5.0226	0.7566	1.411	-11.792
1-94-1	0.5027	459.0	732.2	13.90	5.3612	2.5927	1.366	-10.560
1-94-2	0.5023	454.6	727.8	8.70	5.2969	1.4679	1.374	-11.129
1-96-1	0.4996	419.4	692.6	2.30	4.7969	0.4795	1.444	-12.248
2-10-1	0.2489	431.8	705.0	1.87	4.9703	0.3762	1.418	-12.490
2-11-1	0.2513	441.0	714.2	4.46	5.1008	0.8744	1.400	-11.647
2-11-2	0.2508	428.4	701.6	1.98	4.9224	0.4022	1.425	-12.424
2-11-3	0.2532	450.5	723.7	11.72	5.2374	2.2378	1.382	-10.707
2-13-1	0.2514	427.3	700.5	2.13	4.9070	0.4341	1.428	-12.347
2-13-2	0.2527	439.3	712.5	3.75	5.0766	0.7387	1.404	-11.816
2-13-3	0.2518	452.3	725.5	11.85	5.2635	2.2514	1.378	-10.701

TABLE V

Material: Coarse AP; Peak #1 (endothermic); Heated vs. atmosphere

Sample #	Sample Wt.(g)	Peak Temp. deg. C	T_m deg. K	Rate deg/min.	T_m^2 (x 10^{-5})	Rate/T_m^2 (x 10^5)	$1/T_m$(x 10^3)	ln(Rate/T_m^2)
2- 5-1	0.5007	247.4	520.6	4.10	2.7102	1.5128	1.921	-11.098
2- 5-2	0.5052	243.8	517.0	2.10	2.6729	0.7857	1.934	-11.754
2- 8-1	0.5032	235.9	509.1	2.11	2.5918	0.8141	1.964	-11.718

TABLE V (cont.)

2- 7-1	0.5002	245.0	518.2	2.05	2.6853	0.7634	1.930	-11.783
2- 7-2	0.5023	250.9	524.1	4.44	2.7468	1.6164	1.908	-11.033
2-21-1	0.2019	262.5	535.7	9.40	2.8697	3.2756	1.866	-10.326
2-21-2	0.2021	251.0	524.2	1.90	2.7479	0.6914	1.907	-11.882
2-21-3	0.2027	268.4	541.6	4.16	2.9333	1.4182	1.846	-11.164
2-23-1	0.2007	252.6	525.8	2.34	2.7646	0.8464	1.901	-11.680
2-23-2	0.2063	252.1	525.3	4.16	2.7594	1.5075	1.903	-11.102
2-23-3	0.2254	257.3	530.5	8.64	2.8620	3.0188	1.885	-10.408

TABLE VI

Material: Coarse AP; Peak #2 (exothermic); Heated vs. atmosphere

Sample #	Sample Wt.(g)	Peak Temp. deg. C	T_m deg. K	Rate deg/min.	T_m^2 (x 10^{-5})	Rate/T_m^2 (x 10^5)	$1/T_m$ (x 10^3)	ln(Rate/T_m^2)
2- 5-2	0.5052	297.6	570.8	2.00	3.2581	0.6139	1.752	-12.001
2- 7-1	0.5002	290.0	563.2	1.90	3.1719	0.5990	1.776	-12.025
2- 7-2	0.5023	298.7	571.9	4.26	3.2707	1.3025	1.749	-11.248
2-23-3	0.2254	303.2	576.5	8.64	3.3235	2.5997	1.735	-10.557
2- 5-1	0.5007	307.2	580.4	4.1	3.3686	1.2171	1.722	-11.316

TABLE VII

Material: Coarse AP; Peak #3; Heated vs. atmosphere

Sample #	Sample Wt.(g)	Peak Temp. deg. C	T_m deg. K	Rate deg/min.	T_m^2 (x 10^{-5})	Rate/T_m^2 (x 10^5)	$1/T_m$ (x 10^3)	ln(Rate/T_m^2)
2- 7-2	0.5023	399.3	672.5	4.12	4.5226	0.9110	1.487	-11.606

TABLE VIII

Material: Coarse AP; Peak #4 (exothermic); Heated vs. atmosphere

Sample #	Sample Wt.(g)	Peak Temp. deg. C	T_m deg. K	Rate deg/min.	T_m^2 (x 10^{-5})	Rate/T_m^2 (x 10^5)	$1/T_m$ (x 10^3)	ln(Rate/T_m^2)
2- 7-2	0.5023	448.6	721.8	4.22	5.2100	0.8100	1.385	-11.723
2-21-1	0.2019	469.1	742.3	9.10	5.5101	1.6515	1.347	-11.011
2-21-2	0.2021	443.0	716.2	2.25	5.1294	0.4386	1.396	-12.337
2-21-3	0.2027	465.3	738.5	4.32	5.4538	0.7921	1.354	-11.746
2-23-1	0.2007	465.3	738.5	2.09	5.4538	0.3832	1.354	-12.472
2-23-2	0.2063	457.9	731.1	4.32	5.3451	0.8082	1.367	-11.726
2-23-3	0.2254	454.6	727.8	8.64	5.2969	1.6311	1.374	-11.024

TABLE IX

Material: Medium NH_4ClO_4; Peak #1 (endotherm); Heated vs. atmosphere

Sample #	Sample Wt.(g)	Peak Temp. deg. C	T_m deg. K	Rate deg/min.	T_m^2 (x 10^{-5})	Rate/T_m^2 (x 10^5)	$1/T_m$ (x 10^3)	ln(Rate/T_m^2)
2-22-1	0.1992	251.7	524.9	2.21	2.7552	0.8021	1.905	-11.733
2-22-2	0.2017	250.1	523.3	4.30	2.7384	1.5703	1.910	-11.062
2-22-3	0.1995	254.3	527.5	10.4	2.7825	3.7376	1.895	-10.194
2-24-1	0.2005	245.8	519.0	2.15	2.6936	0.7982	1.926	-11.738
2-24-2	0.2010	249.0	522.2	3.90	2.7270	1.4301	1.914	-11.155

TABLE X

Material: Medium NH_4ClO_4; Peak #2 (exothermic); Heated vs. atmosphere

Sample #	Sample Wt.(g)	Peak Temp. deg. C	T_m deg. K	Rate deg/min.	T_m^2 (x 10^{-5})	Rate/T_m^2 (x 10^5)	$1/T_m$ (x 10^3)	ln(Rate/T_m^2)
2-24-3	0.2010	303.3	576.6	10.5	3.3247	3.158	1.7343	-10.363
2-22-3	0.1995	325.6	598.9	10.4	3.5868	2.900	1.6697	-10.448
2-22-2	0.2017	297.6	570.9	4.15	3.2593	1.273	1.7516	-11.271

TABLE XI

Material: Medium NH_4ClO_4; Peak #4 (exothermic); Heated vs. atmosphere

Sample #	Sample Wt.(g)	Peak Temp. deg. C	T_m deg. K	Rate deg/min.	T_m^2 (x 10^{-5})	Rate/T_m^2 (x 10^5)	$1/T_m$ (x 10^3)	ln(Rate/T_m^2)
2-22-1	0.1992	444.7	717.9	2.25	5.1538	0.4366	1.392	-12.342
2-22-2	0.2017	461.3	734.5	4.01	5.3949	0.7433	1.361	-11.809
2-22-3	0.1995	440.6	713.8	10.40	5.0951	2.0411	1.400	-10.799
2-24-1	0.2005	473.4	746.6	1.97	5.5741	0.3534	1.339	-12.553
2-24-2	0.2010	444.5	717.7	4.44	5.1509	0.8620	1.393	-11.661
2-24-3	0.2010	457.9	731.1	10.5	5.3451	1.9662	1.367	-10.837

TABLE XII

Material: Fine NH_4ClO_4; Peak #1 (endothermic); Heated vs. atmosphere

Sample #	Sample Wt.(g)	Peak Temp. deg. C	T_m deg. K	Rate deg/min.	T_m^2 (x 10^{-5})	Rate/T_m^2 (x 10^5)	$1/T_m$ (x 10^3)	ln(Rate/T_m^2)
2-25-1	0.2013	246.51	519.7	2.11	2.7009	0.7812	1.924	-11.760
2-25-2	0.2021	248.95	522.1	4.29	2.7259	1.5738	1.915	-11.059
2-25-3	0.2020	254.8	528.0	10.39	2.7878	3.7269	1.893	-10.197

TABLE XII (cont.)

2-26-1	0.1993	245.0	518.2	2.2	2.6853	0.8192	1.929	-11.712
2-26-2	0.2048	246.2	519.4	4.15	2.6977	1.5383	1.925	-11.082
2-27-1	0.2014	254.8	528.0	10.25	2.7926	3.6704	1.893	-10.213

TABLE XIII

Material: Fine NH_4ClO_4; Peak #2 (exothermic); Heated vs. atmosphere

Sample #	Sample Wt.(g)	Peak Temp. deg. C	T_m deg. K	Rate deg/min.	T_m^2 (x 10^{-5})	Rate/T_m^2 (x 10^5)	$1/T_m$(x 10^3)	ln(Rate/T_m^2)
2-27-1	0.2014	312.9	586.1	9.63	3.4351	2.803	1.706	-10.482
2-25-2	0.2021	343.0	616.2	4.21	3.7970	1.109	1.623	-11.409

TABLE XIV

Material: Fine NH_4ClO_4; Peak #4 (exothermic); Heated vs. atmosphere

Sample #	Sample Wt.(g)	Peak Temp. deg. C	T_m deg. K	Rate deg/min.	T_m^2 (x 10^{-5})	Rate/T_m^2 (x 10^5)	$1/T_m$(x 10^3)	ln(Rate/T_m^2)
2-25-1	0.2013	415.0	688.2	2.00	4.7362	0.4909	1.453	-12.224
2-25-2	0.2021	441.5	714.7	4.13	5.1080	0.8081	1.399	-11.726
2-25-3	0.2020	448.6	721.8	9.00	5.2619	1.7104	1.3854	-11.871
2-26-1	0.1993	425.4	698.6	1.98	4.9184	0.4025	1.431	-12.423
2-26-2	0.2048	441.1	714.3	4.0	5.1022	0.7839	1.399	-11.756
2-27-1	0.2014	454.2	727.4	8.65	5.2911	1.6345	1.374	-11.021

TABLE XV

Material: AP (stock material); Peak #1 (endothermic); Heated vs. vacuum

Sample #	Sample Wt.(g)	Peak Temp. deg. C	T_m deg. K	Rate deg/min.	T_m^2 (x 10^{-5})	Rate/T_m^2 (x 10^5)	$1/T_m$(x 10^3)	ln(Rate/T_m^2)
1-87-3	0.5084	260.3	533.5	11.80	2.8462	4.1459	1.874	-10.091
1-88-2	0.5020	244.2	517.4	1.97	2.6770	0.7359	1.933	-11.819
1-88-1	0.5010	248.2	521.4	4.30	2.7186	1.5817	1.918	-10.862

TABLE XVI

Material: AP (stock material); Peak #2; Heated vs. vacuum

Sample #	Sample Wt.(g)	Peak Temp. deg. C	T_m deg. K	Rate deg/min.	T_m^2 (x 10^{-5})	Rate/T_m^2 (x 10^5)	$1/T_m$(x 10^3)	ln(Rate/T_m^2)
1-87-3	0.5048	304.5	5.777	8.10	3.3374	2.4270	1.731	-10.626
1-88-2	0.5020	258.3	531.5	2.20	2.8249	0.7788	1.881	-11.763
1-88-1	0.5010	275.1	548.3	3.60	3.0063	1.1975	1.824	-11.332

TABLE XVII

Material: AP (stock material); Peak #3; Heated vs. vacuum

Sample #	Sample Wt.(g)	Peak Temp. deg. C	T_m deg. K	Rate deg/min.	T_m^2 (x 10^{-5})	Rate/T_m^2 (x 10^5)	$1/T_m$(x 10^3)	ln(Rate/T_m^2)
1-87-3	0.5084	413.9	687.1	8.00	4.7211	1.6945	1.455	-10.985
1-88-2	0.5020	394.6	667.8	2.10	4.4596	0.4709	1.497	-12.266
1-88-1	0.5010	390.3	663.5	3.60	4.4023	0.8178	1.507	-11.714

TABLE XVIII

Sample	Atmosphere	Peak No.	Slope	Activation energy in cal./mole
Stock AP	air	1	-37.0	73.6
Stock AP	air	2	- 9.7	18.2
Stock AP	air	3	-15.0	29.8
Stock AP	air	4	-25.8	51.3
Coarse AP	air	1	-11.9	23.7
Coarse AP	air	2	-40.0	79.6
Coarse AP	air	3	-*-	-*-
Coarse AP	air	4	-70.0	139.3
Medium AP	air	1	-54.3	108.0
Medium AP	air	2	-15.86	31.6
Medium AP	air	4	-84.6	168.4
Fine AP	air	1	-45.0	89.6
Fine AP	air	2	-*-	-*-
Fine AP	air	4	-18.3	36.4
Stock AP	vacuum	1	-60.0	119.4
Stock AP	vacuum	2	- 7.7	15.3
Stock AP	vacuum	3	-20.0	39.8

-*-, insufficient data from which to make the calculation.

Plot 1

Peak I - NH_4ClO_4 Stock Material

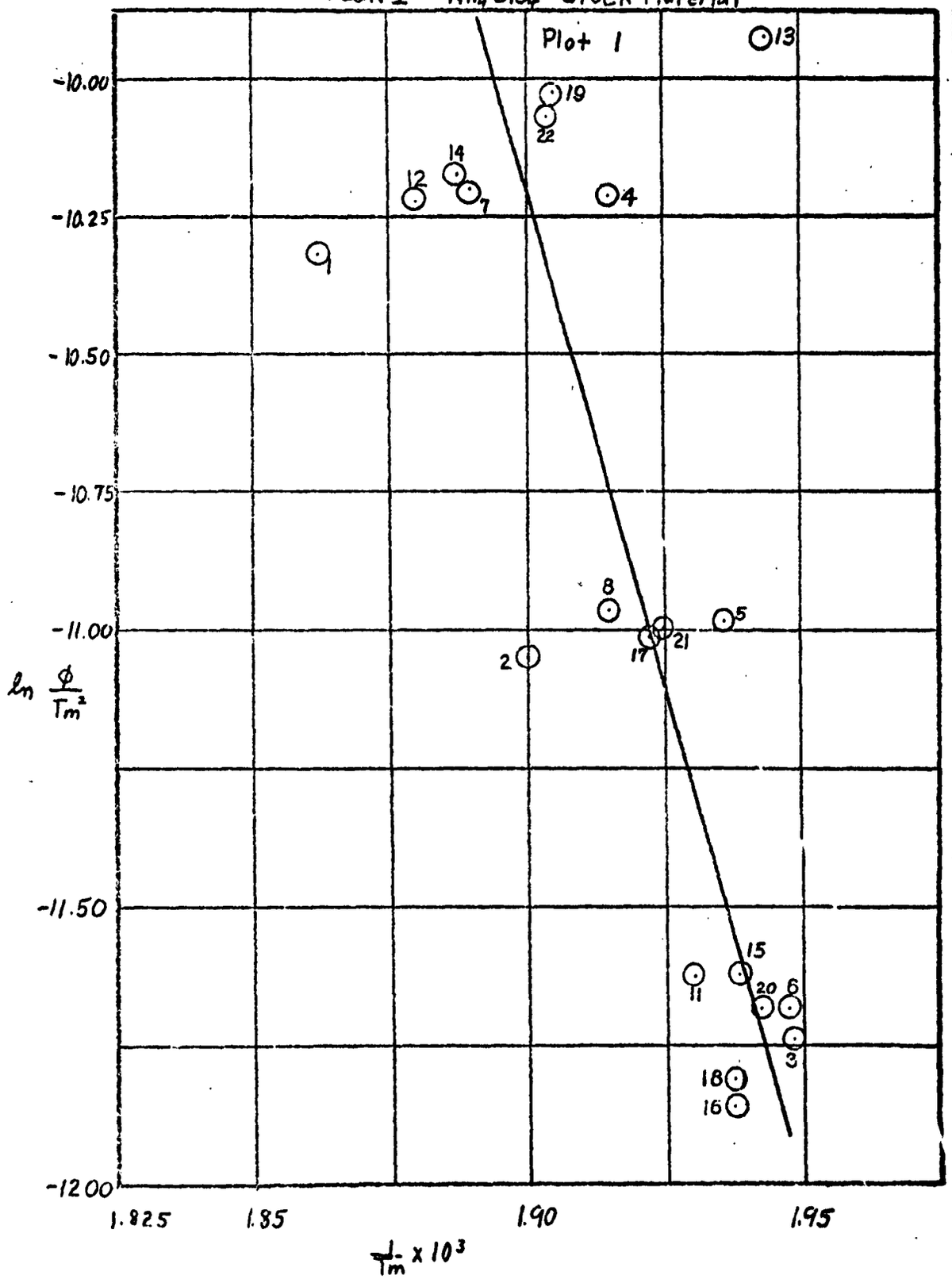

Plot 2

Peak II - NH_4ClO_4 Stock Material

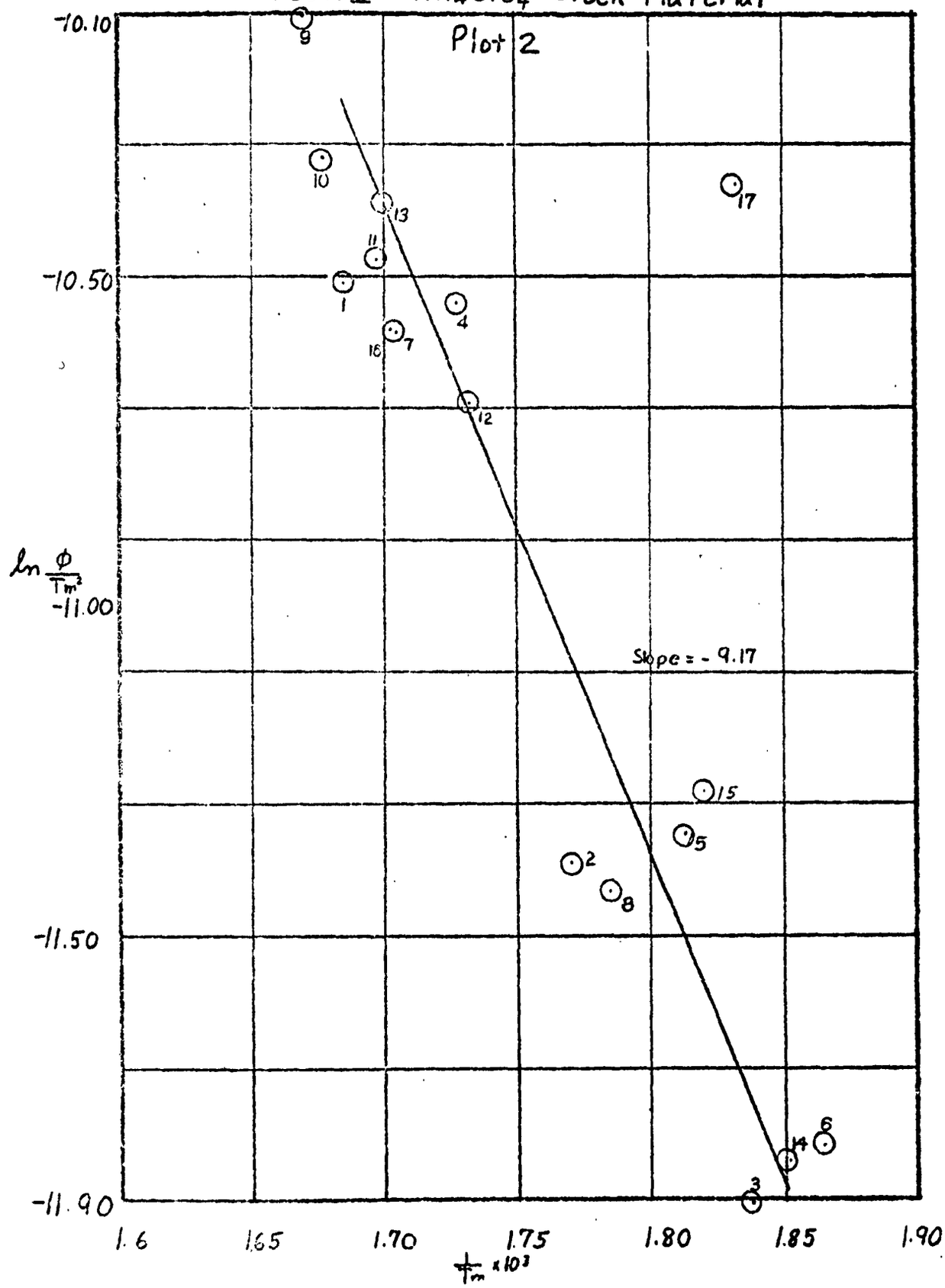

Plot 3

Peak III - NH_4ClO_4 Stock Material

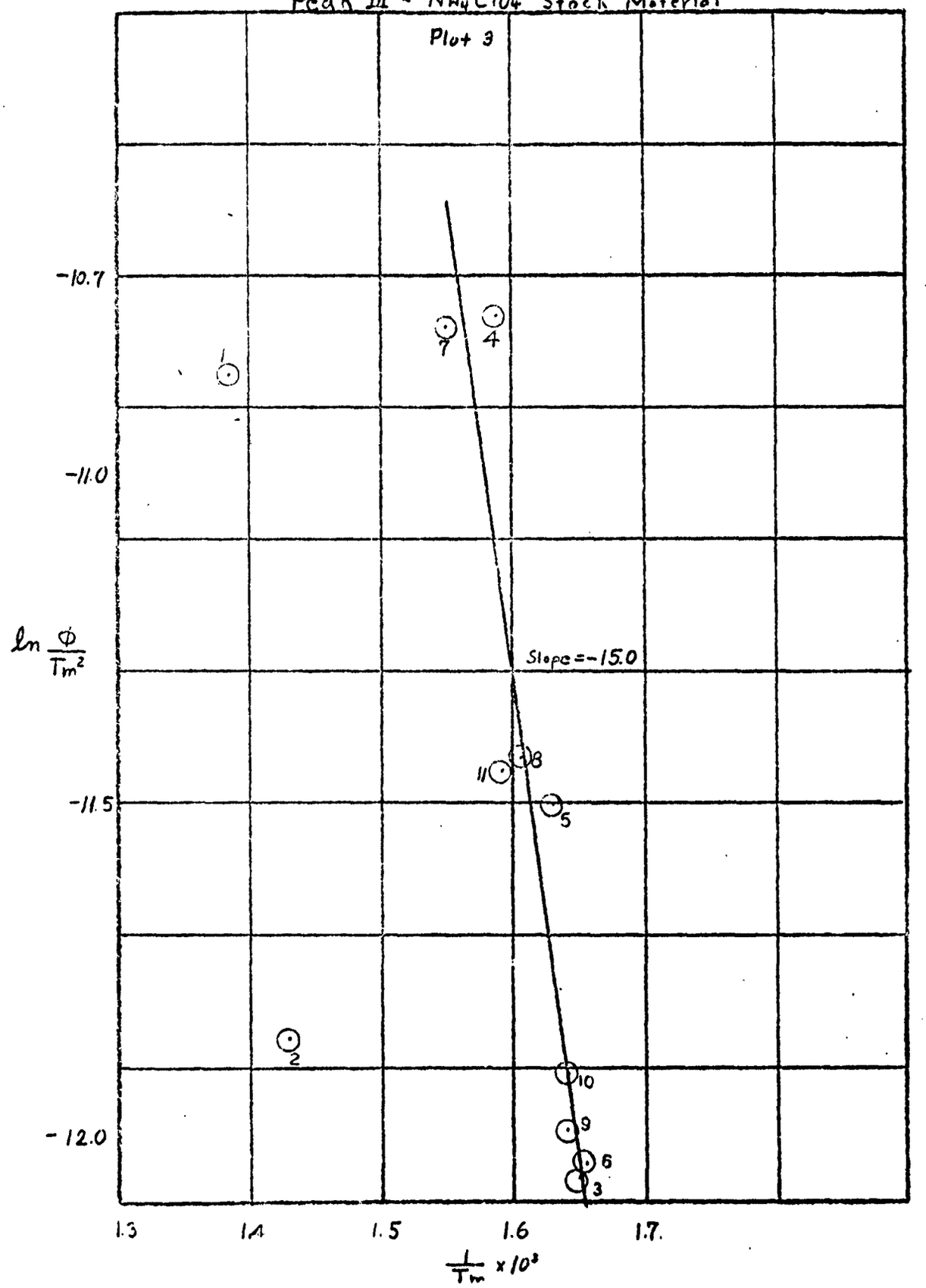

Plot 4

Peak IV - NH_4ClO_4 Stock Material

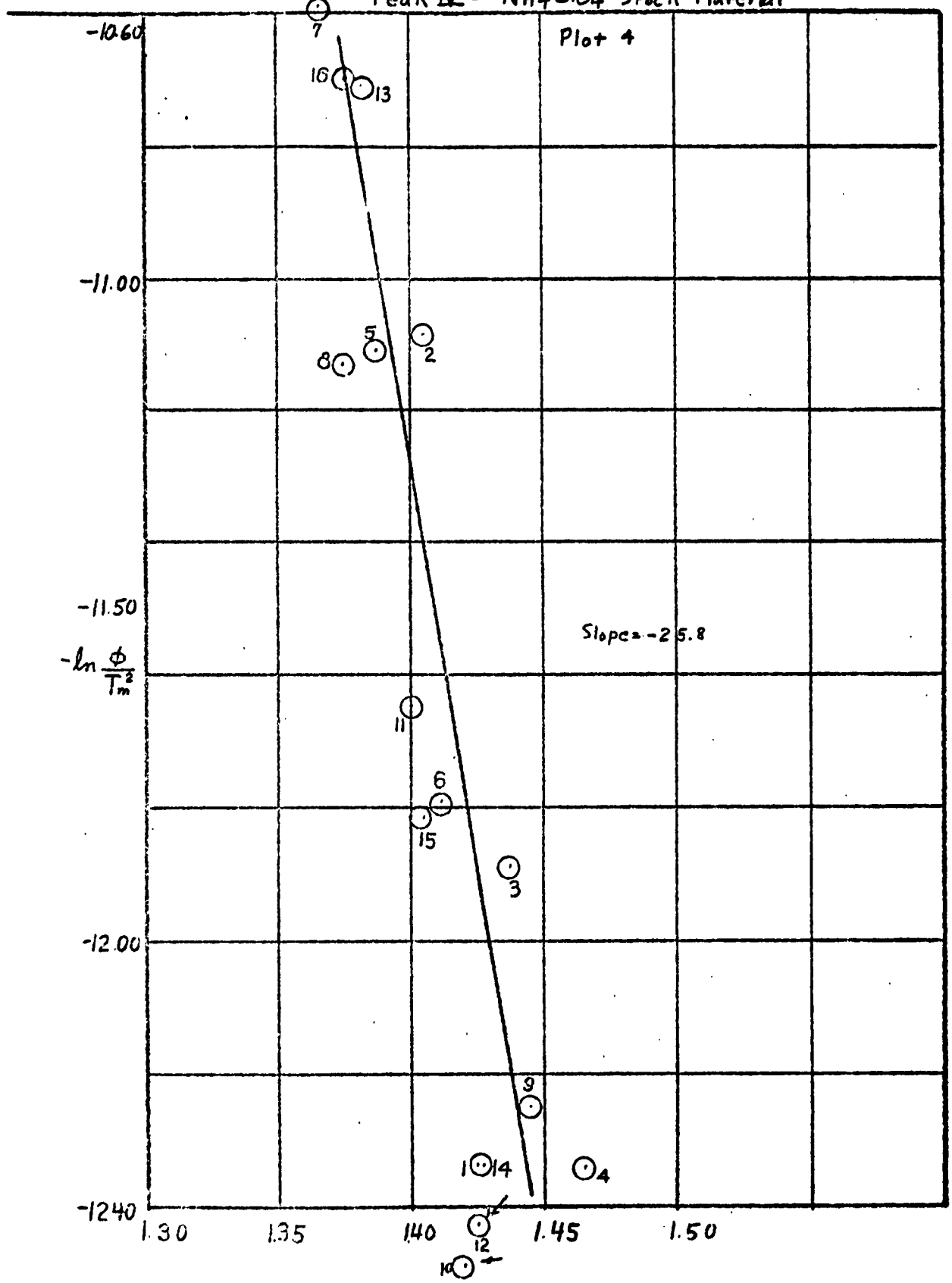

Plot 5

Peak I - Coarse NH_4ClO_4

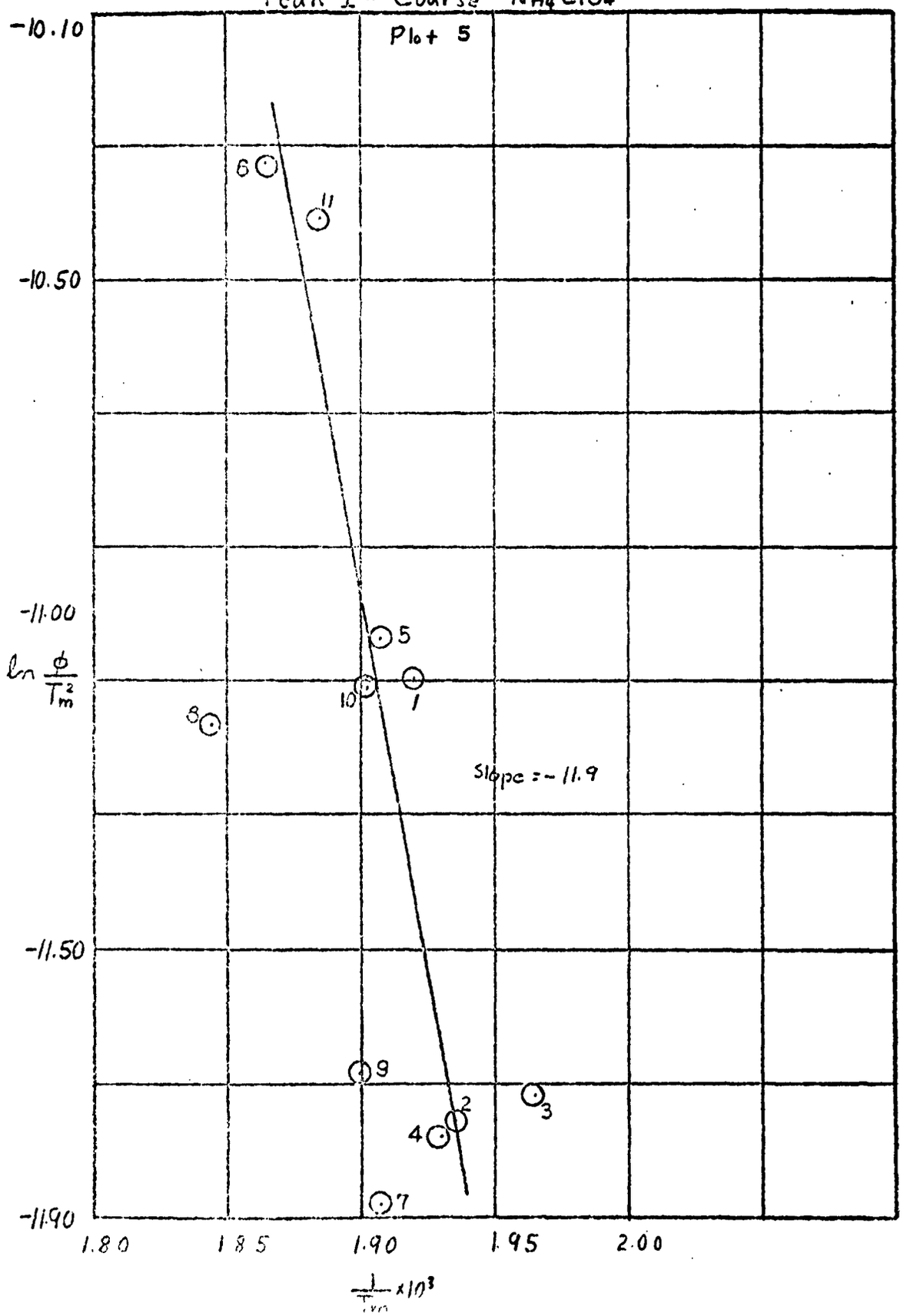

Plot 6

Peak II - Coarse NH_4ClO_4

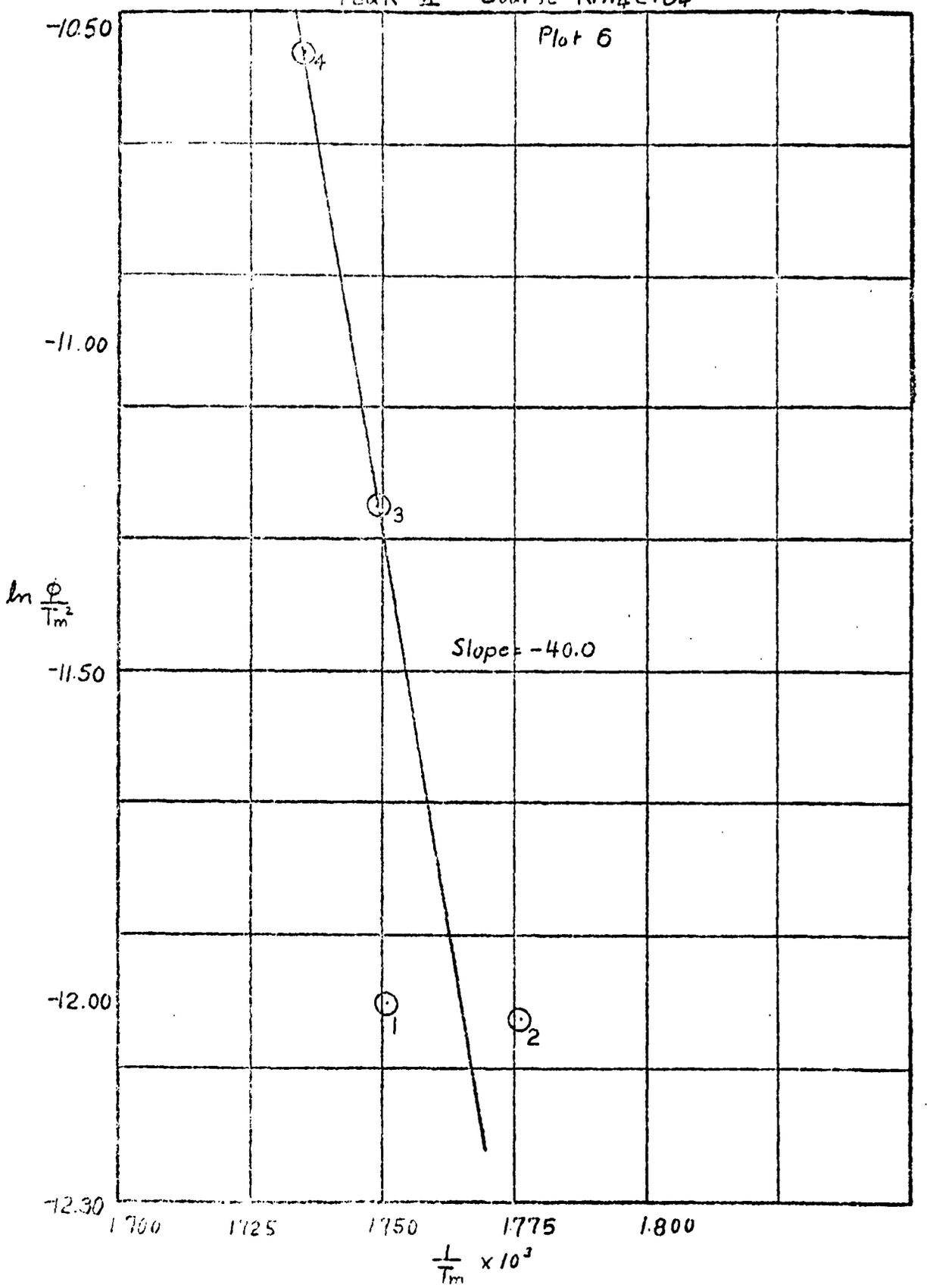

Plot 8
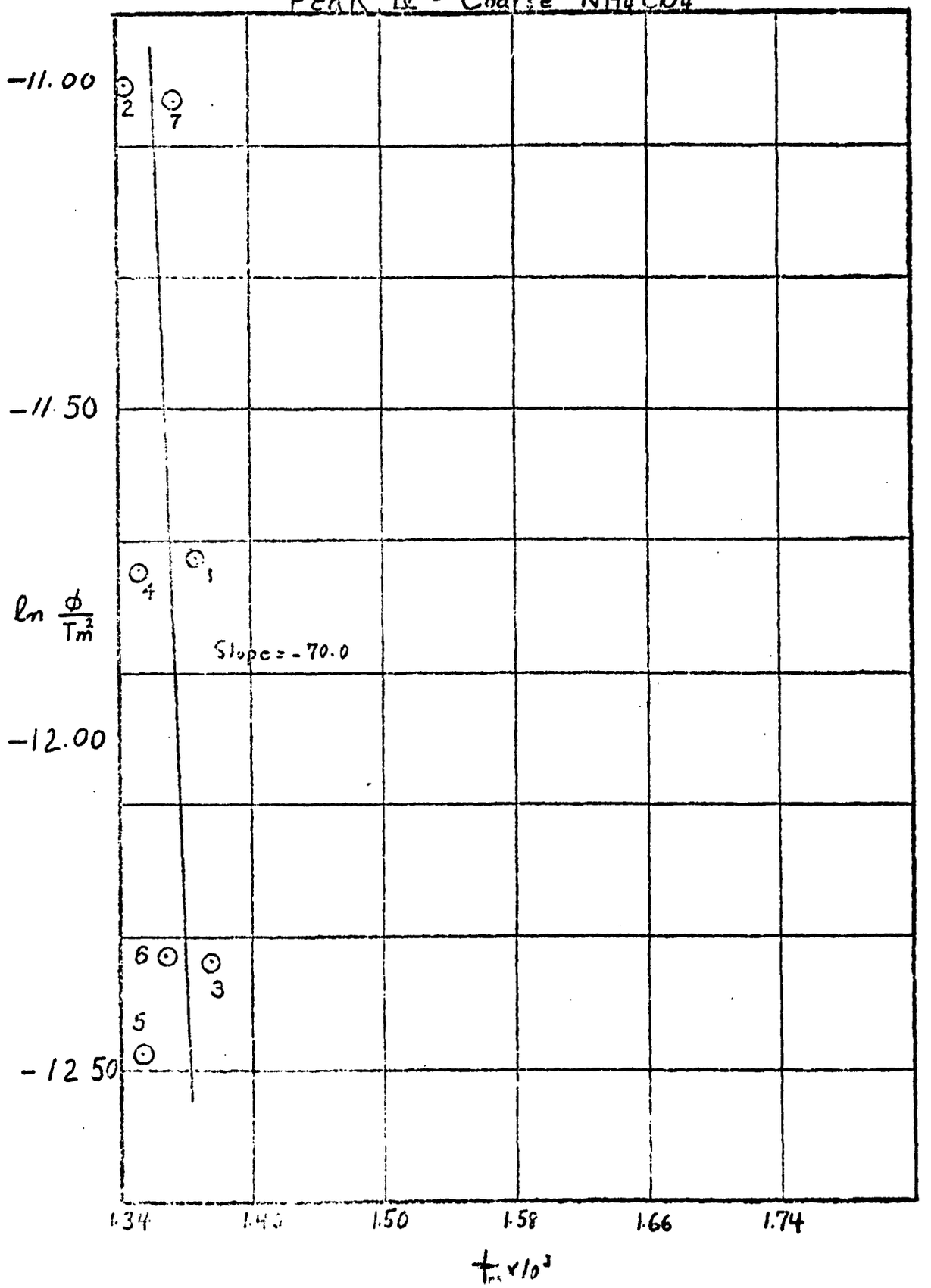
Peak IV - Coarse NH_4ClO_4