UNCLASSIFIED

AD 445923

DEFENSE DOCUMENTATION CENTER

FOR

SCIENTIFIC AND TECHNICAL INFORMATION

CAMERON STATION, ALEXANDRIA, VIRGINIA

UNCLASSIFIED

NOTICE: When government or other drawings, specifications or other data are used for any purpose other than in connection with a definitely related government procurement operation, the U. S. Government thereby incurs no responsibility, nor any obligation whatsoever; and the fact that the Government may have formulated, furnished, or in any way supplied the said drawings, specifications, or other data is not to be regarded by implication or otherwise as in any manner licensing the holder or any other person or corporation, or conveying any rights or permission to manufacture, use or sell any patented invention that may in any way be related thereto.

SSD-TDR-62-74

REPORT NO.
TDR-169(3230-11)TN-1

AIR FORCE
TECHNICAL DATA CENTER
TECHNICAL LIBRARY
ent No. 62-09-054
py No. Repro

Aerodynamic Influence Coefficients from Supersonic Strip Theory: Analytical Development and Computational Procedure

1 AUGUST 1962

Prepared by WILLIAM P. RODDEN and EDITH F. FARKAS
Aeromechanics Department
Aerodynamics and Propulsion Research Laboratory
and
HEATHER A. MALCOM and ADAM M. KLISZEWSKI
Computation and Data Processing Center
Laboratories Division

DDC
RECEIVED

Prepared for COMMANDER SPACE SYSTEMS DIVISION
UNITED STATES AIR FORCE
Inglewood, California

REPRO VELLUM

LABORATORIES DIVISION • AEROSPACE CORPORATION
CONTRACT NO. AF 04(695)-169

SSD-TDR-62-74

Report No.
~~TDR~~-169(3230-11)TN-1

AERODYNAMIC INFLUENCE COEFFICIENTS FROM SUPERSONIC STRIP THEORY: ANALYTICAL DEVELOPMENT AND COMPUTATIONAL PROCEDURE

~~Prepared~~ by

William P. Rodden, ~~and~~ Edith F. Farkas
~~Aeromechanics Department~~
~~Aerodynamics and Propulsion Research Laboratory~~

~~and~~

Heather A. Malcom and Adam M. Kliszewski
~~Computation and Data Processing Center~~
~~Laboratories Division~~

AEROSPACE CORP~~ORATION~~,
~~El Segundo,~~ Calif~~ornia~~

Contract ~~No.~~ AF 04(695)-169

1 Aug~~ust 1962~~

Prepared for

COMMANDER SPACE SYSTEMS DIVISION
UNITED STATES AIR FORCE
Inglewood, California

SSD-TDR-62-74

Report No.
TDR-169(3230-11)TN-1

AERODYNAMIC INFLUENCE COEFFICIENTS FROM SUPERSONIC STRIP THEORY: ANALYTICAL DEVELOPMENT AND COMPUTATIONAL PROCEDURE

Approved by

J. G. Logan, Director
Aerodynamics and Propulsion
Research Laboratory

B. A. Troesch
Department Head,
Computation and Data
Processing Center

AEROSPACE CORPORATION
El Segundo, California

PROOFREADERS ERRATA SHEET			Date
AD Number 445 723	Classification U C S	Lines	Typist
Reading		Review	

DDC FORM DEC 63 0-18

ABSTRACT

~~In this report, we~~ A review is made of a method for computing the aerodynamic influence coefficients (AICs) for surfaces with supersonic leading edges. The method is based on the two-dimensional second-order potential solution of Van Dyke. The strip oscillatory coefficients are obtained from the extension of Van Dyke's work by Rodden and Revell to include the effects of sweep and finite span in addition to the effects of thickness, leading to a method that will avoid the unconservatism of linearized theory and will be applicable at Mach numbers below the lower Mach number limit of piston theory.

The influence coefficients relate the aerodynamic forces to the surface deflections through the following definitions. In the oscillatory case,

$$\{F\} = \rho\omega^2 b_r^2 s \, [C_h] \, \{h\}$$

and in the steady case,

$$\{F_s\} = (1/2)\, \rho V^2 (S/\bar{c}) \, [C_{hs}] \, \{h\}$$

The Aerospace IBM 7090 Computer Program No. HM10 provides the AICs in printed and optional punched-card output formats. The theoretical formulation is limited to Mach numbers normal to the leading edge greater than 1.25. The program capacity is 25 surface strips, 25 values of Mach number, and 50 values of reduced velocity.

CONTENTS

ABSTRACT iii

SYMBOLS v

I. FORMULATION OF PROBLEM 1

A. Introduction 1
B. Sign Convention 1
C. Derivation of Equations 2
D. References 9

II. GENERAL DESCRIPTION OF INPUT 11

A. Units 11
B. Classes of Numerical Data and Limitations 11

III. DATA DECK SETUP 13

A. Loading Order 13
B. Input Data Description 13
C. Example Keypunch Forms 16

IV. PROGRAM OUTPUT 22

A. Printed Output 22
B. Punched Output 37

V. PROCESSING INFORMATION 38

A. Operation 38
B. Estimated Machine Time 38
C. Machine Components Used 38

VI. PROGRAM NOTES 39

A. Subroutines 39
B. Generalized Tapes 39

VII. FLOW DIAGRAM 40

VIII. SYMBOLIC LISTING 41

SYMBOLS

A_n, B_n, C_n, D_n	Coefficients in series expansion for oscillatory aerodynamic coefficients
a_{ij}	Coefficients in series expansion of pressure coefficients
b	Local semichord
b_r	Reference semichord
C_h	Element of oscillatory aerodynamic influence coefficient matrix
C_{hs}	Element of steady aerodynamic influence coefficient matrix
c	Local chord
$\bar{c}$	Mean aerodynamic chord
c_r	Root chord
c_t	Tip chord
d	Distance between forward and aft control points
F	Control point force
f_n	Finite span correction factors
g	Airfoil semithickness
h	Vertical deflection
I_n, J_n, K_n, L_n	Thickness integrals
k	Local reduced frequency, $k = \omega b/V$
k_r	Reference reduced frequency
L_{h_o}, L_{α_o}	Oscillatory leading edge lift coefficients
L_o	Lift referred to leading edge motion
M	Freestream Mach number

$\bar{M}$	Normal Mach number, $\bar{M} = M \cos \Lambda$
M_{h_o}, M_{α_o}	Oscillatory leading edge moment coefficients
M_o	Moment about leading edge
N	$= [(\gamma+1)/2]\ (M/\beta)^2$
$\bar{N}$	$= [(\gamma+1)/2]\ (\bar{M}/\bar{\beta})^2$
r	$= \tau_{te}/\tau$
S	Wing area
s	Wing semispan
V	Free stream velocity
$V/b_r\omega$	Reference reduced velocity, $V/b_r\omega = 1/k_r$
x, ξ	Streamwise coordinates
x_m	Chordwise location of point of maximum thickness
α	Angle of attack
β	$= (M^2 - 1)^{1/2}$
$\bar{\beta}$	$= (\bar{M}^2 - 1)^{1/2}$
γ	Specific heat ratio of air ($\gamma = 1.400$)
Δy	Strip width
Λ	Leading edge sweep angle
λ	Trailing edge sweep angle
ρ	Free stream density
τ	Airfoil maximum thickness ratio
τ_{te}	Airfoil trailing edge thickness ratio
ω	Circular frequency
$[\ ]$	Square matrix
$\{\ \}$	Column matrix

SECTION I

FORMULATION OF PROBLEM

A. Introduction

For aeroelastic analyses of surfaces with supersonic leading edges, a strip theory is desirable that will avoid the unconservatism of linearized theory and will be applicable at lower Mach numbers than piston theory. The second-order theory of Van Dyke[1] offers such a possibility, and it can be shown[2] that both the linearized theory and the piston theory are special cases of this solution.

Van Dyke's analysis is the result of both an iteration and a frequency expansion in the solution of the nonlinear, unsteady potential equation. The iteration has been carried through to obtain the second-order velocity potential (first-order in thickness), and the frequency expansion has been extended to the cubic term. The result has been presented in a series form for the local pressure coefficient on the airfoil; no control surface has been considered.

The present formulation makes use of the pressure coefficient as integrated by Rodden and Revell,[2] corrected for sweep and finite span. The AICs for strip theory have been discussed in Ref. 3 considering quarter-chord coefficients; a more convenient derivation utilizing leading edge coefficients is given in the present study. The computational aspects of this report are an extension of work previously discussed in Ref. 4.

B. Sign Convention

The flutter sign convention is used in the oscillatory case: forces and deflections are positive down; rotations are positive with leading edge up. The aerodynamic sign convention is used in the steady case: forces and deflections are positive up, rotations are positive with leading edge up.

C. Derivation of Equations

The derivation is based on the defining equation for the matrix of oscillatory AICs

$$\{F\} = \rho\omega^2 \, b_r^{\,2} s \, [C_h] \, \{h\}$$

The steady AICs are defined by

$$\{F_s\} = (1/2)\rho V^2 (S/\bar{c}) \, [C_{hs}] \, \{h\}$$

and will be obtained from the limit of the oscillatory case

$$[C_{hs}] = \lim_{k_r \to 0} 2k_r^{\,2} \, (s\bar{c}/S) \, [C_h]$$

We shall derive the aerodynamic matrix for only a single strip since strip theory leads to a partitioned form for the entire surface; e.g.,

$$[C_h] = \left[\begin{array}{c|c|c|c} 0 & 0 & 0 & 0 \\ \hline 0 & C_{h1} & 0 & 0 \\ \hline 0 & 0 & C_{h2} & 0 \\ \hline 0 & 0 & 0 & C_{h3} \end{array}\right]$$

in the case of a three-strip wing where the first null partition is reserved for control points whose aerodynamic forces can be neglected (e.g., external stores). Each surface partition is of the order 2 x 2 since we consider only

the degrees of freedom in pitching and plunging: the Van Dyke solution has not yet been extended to the control surface degree of freedom. The given and equivalent force systems and geometry are shown in Fig. 1. The forward control point in the equivalent system has been arbitrarily placed in the quarter chord location.

The force equivalence is given by

$$\begin{bmatrix} 1 & 1 \\ b/2 & (d+b/2) \end{bmatrix} \begin{Bmatrix} F_1 \\ F_2 \end{Bmatrix} = \begin{Bmatrix} L_o \\ M_o \end{Bmatrix}$$

from which

$$\begin{Bmatrix} F_1 \\ F_2 \end{Bmatrix} = \begin{bmatrix} (1+b/2d) & -1/d \\ -b/2d & 1/d \end{bmatrix} \begin{Bmatrix} L_o \\ M_o \end{Bmatrix}$$

The leading edge oscillatory coefficients are defined by

$$\begin{Bmatrix} L_o \\ M_o \end{Bmatrix} = 4\rho\omega^2 b^2 \Delta y \begin{bmatrix} 1 & 0 \\ 0 & b \end{bmatrix} \begin{bmatrix} L_{h_o} & L_{\alpha_o} \\ M_{h_o} & M_{\alpha_o} \end{bmatrix} \begin{Bmatrix} h_o \\ b\alpha \end{Bmatrix}$$

The geometrical equivalence is

$$\begin{Bmatrix} h_o \\ b\alpha \end{Bmatrix} = \begin{bmatrix} (1+b/2d) & -b/2d \\ -b/d & b/d \end{bmatrix} \begin{Bmatrix} h_1 \\ h_2 \end{Bmatrix}$$

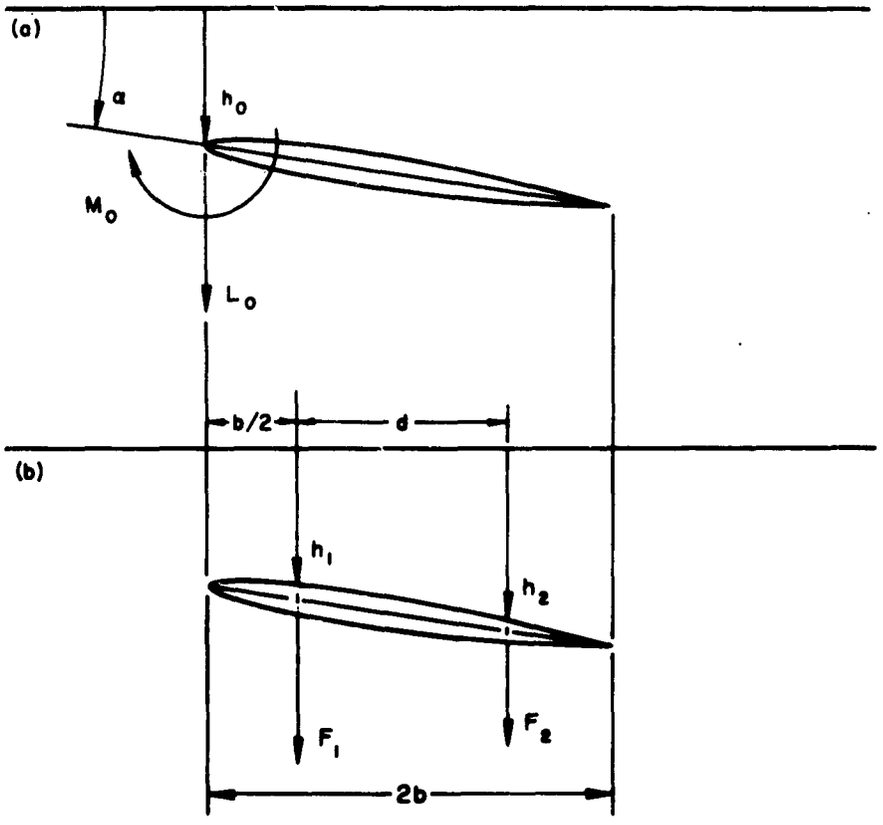

Fig. 1. Original (a) and Equivalent (b) Force Systems and Geometry.

Cascading the above solutions we find

$$\begin{Bmatrix} F_1 \\ F_2 \end{Bmatrix} = 4\rho\omega^2 b^2 \Delta y \begin{bmatrix} (1+b/2d) & -b/d \\ -b/2d & b/d \end{bmatrix}$$

$$\times \begin{bmatrix} L_{h_o} & L_{a_o} \\ M_{h_o} & M_{a_o} \end{bmatrix} \begin{bmatrix} (1+b/2d) & -b/2d \\ -b/d & b/d \end{bmatrix} \begin{Bmatrix} h_1 \\ h_2 \end{Bmatrix}$$

Comparing this result to the definition of the influence coefficient matrix, we find

$$[C_h] = 4(b/b_r)^2 (\Delta y/s) \begin{bmatrix} (1+b/2d) & -b/d \\ -b/2d & b/d \end{bmatrix}$$

$$\times \begin{bmatrix} L_{h_o} & L_{a_o} \\ M_{h_o} & M_{a_o} \end{bmatrix} \begin{bmatrix} (1+b/2d) & -b/2d \\ -b/d & b/d \end{bmatrix}.$$

We note the pre- and post-multipliers to be mutual transposes. Once the partitions have been obtained for each strip, the total matrix is formed as indicated above.

The steady influence coefficients follow as a limiting case of the oscillatory matrix. From the definitions of both oscillatory and steady matrices we find (since in both sign conventions the forces and deflections are in the same direction)

$$[C_{hs}] = \lim_{k_r \to 0} 2k_r^2 (s\bar{c}/S) [C_h] .$$

We next consider the oscillatory coefficients necessary in the influence coefficient formulation. Space permits only a summary of the results given by Ref. 2. The strip leading edge oscillatory coefficients are given by

$$L_{h_o} = A_2 f_2 + i(A_3 f_1/k + A_4 f_3 k)$$

$$L_{\alpha_o} = (B_1 f_1/k^2 + B_2 f_3) + i(B_3 f_2/k + B_4 f_4 k)$$

$$M_{h_o} = C_2 f_3 + i(C_3 f_2/k + C_4 f_4 k)$$

$$M_{\alpha_o} = (D_1 f_2/k^2 + D_2 f_4) + i(D_3 f_3/k + D_4 f_5 k)$$

where A_n, B_n, C_n, and D_n depend on the Mach number and airfoil thickness integrals, the f_n are finite span correction factors, and the reduced frequency k is based on the local chord.

The basic expressions involved in A_n, B_n, C_n, and D_n can be outlined, but the reader is referred to Ref. 2 for the finite span correction factors f_n (it may be noted that the $f_n = 1$ for all strips inboard of the tip Mach cone, where as the $f_n < 1$ in the region of the tip Mach cone). The basic expressions are

$$A_2 = -(1/8)(a_{22}/2 + J_1 a_{24} + I_2 a_{26})$$

$$A_3 = -(1/8)(a_{12} + I_1 a_{14})$$

$$A_4 = -(1/8)(a_{32}/3 + K_1 a_{34} + J_2 a_{36} + I_3 a_{38})$$

$$B_1 = (1/4)(a_{01} + I_1 a_{02})$$

$$B_2 = (1/4)(a_{21}/3 + K_1 a_{23} + J_2 a_{25} + I_3 a_{27})$$

$$B_3 = (1/4)(a_{11}/2 + J_1 a_{13} + I_2 a_{15})$$

$$B_4 = (1/4)(a_{31}/4 + L_1 a_{33} + K_2 a_{35} + J_3 a_{37} + I_4 a_{39})$$

$$C_2 = -(1/4)\,(a_{22}/3 + J_2 a_{24} + I_3 a_{26})$$

$$C_3 = -(1/4)\,(a_{12}/2 + I_2 a_{14})$$

$$C_4 = -(1/4)\,(a_{32}/4 + K_2 a_{34} + J_3 a_{36} + I_4 a_{38})$$

$$D_1 = (1/2)\,(a_{01}/2 + I_2 a_{02})$$

$$D_2 = (1/2)\,(a_{21}/4 + K_2 a_{23} + J_3 a_{25} + I_4 a_{27})$$

$$D_3 = (1/2)\,(a_{11}/3 + J_2 a_{13} + I_3 a_{15})$$

$$D_4 = (1/2)\,(a_{31}/5 + L_2 a_{33} + K_3 a_{35} + J_4 a_{37} + I_5 a_{39})$$

where

$$a_{01} = -\,(4/\bar{\beta})\cos\Lambda$$

$$a_{02} = -\,(4/\bar{\beta}^2)\,(\bar{M}^2\bar{N} - 2)$$

$$a_{11} = (8/\bar{\beta}^3)\,(2 - \bar{M}^2)\cos\Lambda$$

$$a_{12} = (8/\bar{\beta})\cos\Lambda$$

$$a_{13} = (16\bar{M}^2/\bar{\beta}^4)\,(\bar{N} - 1)$$

$$a_{14} = (8/\bar{\beta}^2)\,(\bar{M}^2\bar{N} - 2)$$

$$a_{15} = (8/\bar{\beta}^4)\,(2 - \bar{M}^2)\,(\bar{M}^2\bar{N} - 1)$$

$$a_{21} = (4/\bar{\beta}^5)\,(\bar{M}^2 + 2)\cos\Lambda$$

$$a_{22} = (16/\bar{\beta}^3)\cos\Lambda$$

$$a_{23} = (8\bar{M}^2/\bar{\beta}^6)\,[\,3\,(3\bar{M}^2 - 2)\,\bar{N} - 2\,(5\bar{M}^2 - 3)]$$

$$a_{24} = (8\bar{M}^2/\bar{\beta}^4)\,(4\bar{N} - 5)$$

$$a_{25} = (4\bar{M}^2/\bar{\beta}^6)\,[\,(16 - 7\bar{M}^2)\,\bar{N} + 4\,(2\bar{M}^2 - 3)]$$

$$a_{26} = (16\bar{M}^2/\bar{\beta}^4)\,(\bar{N} - 1)$$

$$a_{27} = (4\bar{M}^2/\bar{\beta}^6)\,[\,(\bar{M}^2 + 2)\,\bar{N} - 4]$$

$$a_{31} = -\,(8\bar{M}^2/3\bar{\beta}^7)\,(\bar{M}^2 + 4)\,\cos\Lambda$$

$$a_{32} = -\,(24\bar{M}^2/\bar{\beta}^5)\,\cos\Lambda$$

$$a_{33} = (16\bar{M}^2/\bar{\beta}^8)\,[\,(17\bar{M}^4 - 10\bar{M}^2 - 4)\,\bar{N} - (5\bar{M}^2 - 2)\,(4\bar{M}^2 - 1)]$$

$$a_{34} = (16\bar{M}^2/\bar{\beta}^6)\,[\,6\bar{M}^2 - (5\bar{M}^2 - 2)\,\bar{N}]$$

$$a_{35} = (16\bar{M}^2/\bar{\beta}^8)\,[\,7\bar{M}^2\,(2\bar{M}^2 - 1) - (12\bar{M}^4 - 3\bar{M}^2 - 4)\,\bar{N}]$$

$$a_{36} = (8\bar{M}^2/\bar{\beta}^6)\,[\,2(\bar{M}^2 + 1) - (\bar{M}^2 + 8)\,\bar{N}]$$

$$a_{37} = (8\bar{M}^2/\bar{\beta}^8)\,[\,(3\bar{M}^2 + 2) - (3\bar{M}^2 + 4)\,\bar{N}]$$

$$a_{38} = (8\bar{M}^2/\bar{\beta}^6)\,[\,2(\bar{M}^2 + 1) - 3\bar{M}^2\bar{N}]$$

$$a_{39} = (8\bar{M}^2/3\bar{\beta}^8)\,[\,(5\bar{M}^2 + 2) - \bar{M}^2\bar{N}\,(\bar{M}^2 + 4)]$$

and the thickness integrals are defined by

$$I_n = (1/2b)^n \int_0^{2b} x^{n-1} g' \, dx, \quad n = 1(1)5$$

$$J_n = (1/2b)^{n+1} \int_0^{2b} x^{n-1} g \, dx, \quad n = 1(1)4$$

$$K_n = (1/2b)^{n+2} \int_0^{2b} x^{n-1} dx \int_0^x g d\xi, \quad n = 1(1)3$$

$$L_n = (1/2b)^{n+3} \int_0^{2b} x^{n-1} dx \int_0^x \xi g d\xi, \quad n = 1(1)2$$

Reference 2 evaluates these thickness integrals for a typical airfoil.

From the oscillatory coefficient expressions we may find the limiting values and the steady matrix for a single strip

$$[C_{hs}] = 8(s\bar{c}/S)(\Delta y/s) \begin{bmatrix} (1+b/2d) & -b/d \\ -b/2d & b/d \end{bmatrix}$$

$$\times \begin{bmatrix} 0 & B_1 f_1 \\ 0 & D_1 f_2 \end{bmatrix} \begin{bmatrix} (1+b/2d) & -b/2d \\ -b/d & b/d \end{bmatrix}$$

D. References

1. M. D. Van Dyke. "Supersonic Flow Past Oscillating Airfoils Including Nonlinear Thickness Effects." NACA TN 2982, 1953.

2. W. P. Rodden and J. D. Revell. "Oscillatory Aerodynamic Coefficients for a Unified Supersonic Hypersonic Strip Theory." Journal of the Aerospace Sciences, 27 (1960), 451; based on North American Aviation, Inc., Report NA-57-1549, 31 December 1957.

3. W. P. Rodden. "Aerodynamic Influence Coefficients from Strip Theory." Journal of the Aerospace Sciences, 26 (1959), 833.

4. W. P. Rodden, E. F. Farkas, and R. K. Oyama. "Aerodynamic Influence Coefficients by Supersonic Strip Theory: Analytical Development and Procedure for the IBM 7090 Computer." Norair Division, Northrop Corporation, Report NOR-61-56, 14 April 1961.

SECTION II

GENERAL DESCRIPTION OF INPUT

A. Units

Since all dimensional input is geometrical and the aerodynamic matrix is dimensionless, only a consistent set of length units is necessary: inches or feet.

B. Classes of Numerical Data and Limitations

The data required by the program are the geometry, reduced velocities, and Mach numbers. The example illustrates their use.

1. Example Problem

We consider the four-strip wing shown in Fig. 2 at the freestream Mach numbers of 1.8 and 2.5 for the reduced velocities of 4.0 and 8.0 and the steady case. The aerodynamic matrices will be found with and without the tip correction, and the thickness integrals will be generated by the program from the expressions of App. A of Ref. 2 for an assumed airfoil (constant across the span) having 10 percent thickness, maximum thickness at 40 percent chord, and a blunt trailing edge that has a trailing-edge-to-maximum-thickness ratio of 0.15.

2. Program Restrictions and Options

a. The number of strips into which a wing may be subdivided must be ≤ 25.

b. The number of reduced velocities used for any one Mach number must be ≤ 50.

c. The number of values of Mach number must be ≤ 25.

d. If it is desired to compute the steady matrix $[C_{hs}]$, a zero or negative value of $V/b_r\omega$ must be used and S and $\bar{c}$ must also be supplied.

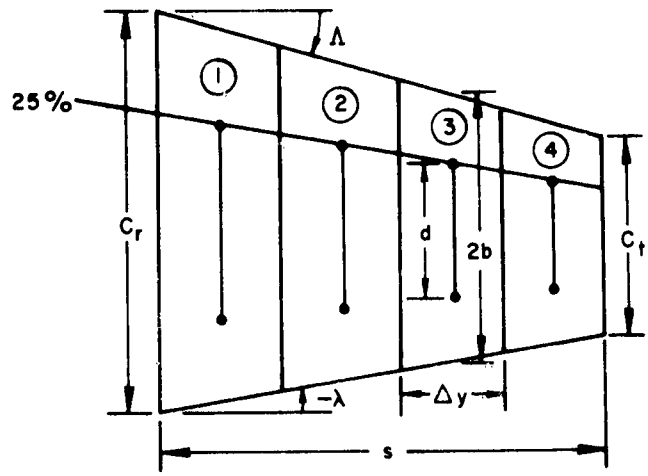

Fig. 2. Example of Four-Strip Wing.

Strip No.	Δy (ft)	b (ft)	d (ft)
1	4.7	12.28125	11.9
2	4.2	9.50000	9.0
3	3.6	7.06250	6.6
4	3.1	4.96875	4.5

b_r = 6.5 ft

s = 15.6 ft

c_r = 27.5 ft

c_t = 8.0 ft

tan Λ = 0.75 (cos Λ = 0.80)

tan λ = -0.50

$\bar{c}$ = 21.0 ft

S = 554.0 sq ft

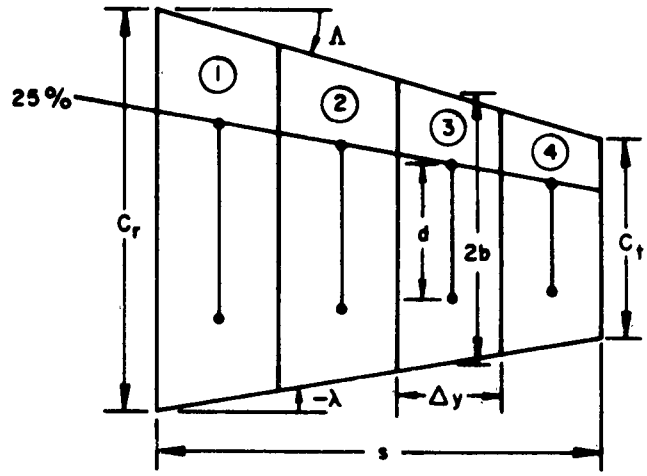

Fig. 2. Example of Four-Strip Wing.

Strip No.	Δv (ft)	b (ft)	d (ft)
1	4.7	12.28125	11.9
2	4.2	9.50000	9.0
3	3.6	7.06250	6.6
4	3.1	4.96875	4.5

b_r = 6.5 ft

s = 15.6 ft

c_r = 27.5 ft

c_t = 8.0 ft

tan Λ = 0.75 (cos Λ = 0.80)

tan λ = -0.50

$\bar{c}$ = 21.0 ft

S = 554.0 sq ft

SECTION III

DATA DECK SETUP

A. Loading Order

Input decks punched from keypunch forms are loaded behind column binary deck HM10. Any number of complete decks may be stacked. The data for each deck must be in the following order:

(1) Heading Card 1

(2) Heading Card 2

(3) ISTRIP, JMACH, KVBRW, ISTHK, ISTIP, NO PUNJ

(4) b_r, s, S, $\bar{c}$, c_t, $\tan \Lambda$, $\tan \lambda$, $\cos \Lambda$

(5) b_i series

(6) d_i series

(7) Δy_i series

(8) M_j series

(9) $(V/b_r\ \omega)_k$ series

(10) Thickness integrals

(a) Provide thickness integrals

(b) Input data to compute thickness integrals

B. Input Data Description

(1) Heading Card 1 may contain any information desired (Columns 2 through 72). Column 1 should be blank.

(2) Heading Card 2 provides for more information (Columns 2 through 72): vehicle, date, name. Column 1 is blank and all or any of the fields may be blank but the card must be included.

(3) Control card (FORMAT 1814)

(a) ISTRIP = number of strips

(b) JMACH = number of Mach numbers

(c) KVBRW = number of reduced velocities

(d) ISTHK = 0 if thickness integrals are tabulated

= 1 if x_m/c, τ, and r are constant

= 2 if x_m/c and r are constant and τ varies with each strip

= 3 if x_m/c, τ, and r all vary with each strip

(e) ISTIP = 0 if tip correction factor is 1.0

$\neq$ 0 if tip correction factor is to be computed by program

(f) NO PUNJ = 0 or blank if the computed matrices are to be punched in cards

$\neq$ 0 if no punched cards are desired

(4) Single parameters (FORMAT 6E12.8): When computing both steady-state and oscillatory AICs from the same data deck, we use the eight parameters: b_r (semichord), s (semispan), S (surface area), $\bar{c}$ (mean aerodynamic chord), c_t (tip chord), tan Λ (tangent of leading edge sweep angle), tan λ (tangent of trailing edge sweep angle), and cos Λ (cosine of leading edge sweep angle). For computing oscillatory cases, S and $\bar{c}$ may be blank (or included); and for steady cases, b_r and s may be blank (or included). These parameters are tabulated in the same order as defined, and always require two lines (cards).

(5), (6), and (7) Series b_i; d_i, and Δy_i (FORMAT 6E12.8): The number of lines (cards) required by the b_i, d_i, and Δy_i series is controlled by the number of strips. Using the maximum 25 strips would require five cards for each series. Tabulate b_i (local semichords), d_i (distance between control points), and

Δy_i (strip widths) in the order defined with each new series starting on a new card.

(8) and (9) M_j (freestream Mach number) and $V/b_r\omega$ (reduced velocity) series (FORMAT 6E12.8): The M_j series may be input in any order desired with $j \leq 25$ per deck. $M_j \cos \Lambda$ must be ≥ 1.25. The $(V/b_r\omega)_k$ series is tabulated only once per deck and will be repeated by the program for each Mach number indicated by the M_j series. For the steady case, tabulate either a zero or negative $V/b_r\omega$.

(10) Thickness integral input (FORMAT 6E12.8)

(a) ISTHK = 0; the thickness integrals must be tabulated in the order: I_1, I_2, I_3, I_4, I_5, J_1, J_2, J_3, J_4, K_1, K_2, K_3, L_1, and L_2 (three cards).

(b) ISTHK $\neq$ 0; the thickness integrals are computed by supplying x_m/c (percent chord location of maximum thickness, τ (airfoil maximum thickness ratio), and r (ratio of τ_{te}/τ). When using this option omit (10.a).

1) ISTHK = 1; the three ratios are each constant for the surface and tabulated in the order defined. (First field in three separate cards.)

2) ISTHK = 2; the ratios x_m/c and r are each constant for the surface but τ varies with each strip. Input in the order x_m/c, (Field 1, first thickness integral card), τ series (beginning on a new card), and r (Field 1 of the last card).

3) ISTHK = 3; the ratios x_m/c, τ, and r all vary with each strip. Tabulate in order with each new series starting on a new card.

C. Example Keypunch Forms

Example keypunch forms are given on the following pages. Columns 73 through 80 are reserved for data deck identification. This space may be used in any fashion; however, it is suggested that the last three columns be used for sequencing. Only the cards with sequencing in Columns 73 through 80 are to be used in the sample data deck; the lines (cards) with Columns 73 through 80 blank are for clarification of input.

80 COLUMN FREE KEYPUNCH

AEROSPACE CORPORATION

PROGRAMMER _____ KEYPUNCHED _____ VERIFIED _____ DATE _____ SHEET _____

SAMPLE CASE WITHOUT TIP CORRECTION — HM100001

W. P. RODDEN APR. 1962 — HM100002

Heading Card 1

Heading Card 2

4 2 3 1 0 0 — HM100003

NO PUNJ

ISTIP

ISTHK

KVBRW

JMACH

ISTRIP

b_r s S $\bar{c}$ c_t tan Λ

+65 +01+156 +02+554 +03+21 +02+8 +01+75 +00 — HM100004

tan λ cos Λ

-5 +00+5 +00 — HM100005

ENTER LOCAL SEMICHORDS (b_i)

b_1 +1228125 +02+95 +01+70625 +01+496875 +01 — HM100006

b_7

b_{13}

b_{19}

b_{25}

AEROSPACE FORM 2000

80 COLUMN FREE KEYPUNCH

AEROSPACE CORPORATION

PROGRAMMER ______ KEYPUNCHED ______ VERIFIED ______ DATE ______ SHEET ______

ENTER CHORDWISE DISTANCE BETWEEN CONTROL POINTS (d_i)

	Cols 1–9	Cols 10–18	Cols 19–27	Cols 28–36	Cols 37–45	Cols 73–80
d_1	+119	[illegible]	+01+66	+01+45	+01	HM100007
d_7						
d_{13}						
d_{19}						
d_{25}						

ENTER STRIP WIDTH (Δy_i)

	Cols 1–9	Cols 10–18	Cols 19–27	Cols 28–36	Cols 37–45	Cols 73–80
Δy_1	+47	+01+42	+01+36	+01+31	+01	HM100008
Δy_7						
Δy_{13}						
Δy_{19}						
Δy_{25}						

MACH NUMBERS (M_j)

	Cols 1–9	Cols 10–18	Cols 19–27	Cols 28–36	Cols 37–45	Cols 73–80
M_1	+18	+01+25	+01			HM100009
M_7						
M_{13}						
M_{19}						
M_{25}						

80 COLUMN FREE KEYPUNCH

AEROSPACE CORPORATION

PROGRAMMER _____ KEYPUNCHED _____ VERIFIED _____ DATE _____ SHEET _____

REDUCED VELOCITY $(V/b_r\omega)_k = (1/k_r)_k$

HM10001 0

$\left(\frac{1}{k_r}\right)_1$ +4 +01+8 +01+0 +00

7

13

19

25

31

37

43

49

IF THICKNESS INTEGRAL CONTROL = 0 ENTER THE FOLLOWING INTEGRAL VALUES

± I_1 ±E ± I_2 ±E ± I_3 ±E ± I_4 ±E ± I_5 ±E ± J_1 ±E

J_2 J_3 J_4 K_1 K_2 K_3

L_1 L_2

80 COLUMN FREE KEYPUNCH

AEROSPACE CORPORATION

PROGRAMMER _____ KEYPUNCHED _____ VERIFIED _____ DATE _____ SHEET _____

IF THICKNESS INTEGRAL CONTROL ≠ 0 ENTER THE PROPER NUMBER OF (x_m/c), τ, and r

$\left(\frac{x_m}{c}\right)_1$	+4	+00	HM100011
7			
13			
19			
25			
τ_1	+1	+00	HM100012
7			
13			
19			
25			
r_1	+15	+00	HM100013
7			
13			
19			
25			

80 COLUMN FREE KEYPUNCH

AEROSPACE CORPORATION

PROGRAMMER _____ KEYPUNCHED _____ VERIFIED _____ DATE _____ SHEET _____

SAMPLE CASE							WITH TIP CØRRECTIØN												HMICA001
							W P RØDDEN												02
	4	7	3		1	1													03
	+65		+01	+156		+02	+554		+03	+21		+028		101	+75		+00		04
	-5		+00	+8		+00													05
b_1	-	2[illegible]8135	+02	+9[illegible]		+01	+70625		+01	+496875		+01							06
d_1	+	+	+02	+9		+01	+66		+01	+45		+01							07
Δr_1	+47		+01	+42		+01	+36		+01	+31		+01							08
M_1	+	8	+01	+2[illegible]		+01													09
[illegible]	+4		+0[illegible]	+8		+0[illegible]	+0		+02										10
[illegible]	-		-10																11
-	+		-10																12
r	-	5																	HMICA013

SECTION IV

PROGRAM OUTPUT

A. Printed Output

1. All input data.

2. Each group of AICs with the associated Mach number and $V/b_r\omega$.

3. Sequencing number of the first and last punched cards (output) for each group (one $V/b_r\omega$) of influence coefficients.

4. Example problem printed output is given on the following pages.

AERODYNAMIC INFLUENCE COEFFICIENTS BY SUPERSONIC STRIP THEORY

INPUT DATA

4 STRIPS
2 MACH NUMBERS
3 REDUCED FREQUENCIES

COSINE LAMBDA = 0.80000000E 00
B(R) = 0.64999999E 01
S = 0.15600000E 02
$ = 0.55400000E 03
CBAR = 0.20999999E 02
C(T) = 0.80000000E 01
TAN LD = 0.75000000E 00
TAN TR = -0.50000000E 00

WITHOUT TIP CORRECTION

	DELTA Y (I)	B(I)	D(I)
	0.46999999E 01	0.12281249E 02	0.11900000E 02
	0.41999999E 01	0.95000000E 01	0.89999999E 01
	0.35999999E 01	0.70625000E 01	0.65999999E 01
	0.30999999E 01	0.49687500E 01	0.45000000E 01
1/K (R) =	0.40000000E 01	0.80000000E 01	0.

XM/C = 0.40000000E-00

TAU = 0.09999999E-00

R = 0.15000000E-00

THICKNESS INTEGRALS

I1(K)	I2(K)	I3(K)	I4(K)	I5(K)	J1(K)	J2(K)
0.74999999E-02	-0.27333333E-01	-0.26716665E-01	-0.23411999E-01	-0.20409866E-01	0.34833332E-01	0.17108332E-01

J3(K)	J4(K)	K1(K)	K2(K)	K3(K)	L1(K)	L2(K)
0.10303999E-01	0.69774664E-02	0.17724999E-01	0.12264666E-01	0.92852886E-02	0.68043330E-02	0.50654332E-02

AERODYNAMIC INFLUENCE COEFFICIENTS BY SUPERSONIC STRIP THEORY

OSCILLATORY CASE

1/K(R) = 0.40000000E 01

M = 0.17999999E 01

NUMBER OF STRIPS = 4

CH(1) SIZE = 2 BY 2

0.82001874E 01 -0.85972560E 01I -0.94911763E 01 0.40570676E 01I

-0.58696458E 01 0.73110541E 01I 0.34727361E 01 -0.60698704E 01I

CH(2) SIZE = 2 BY 2

0.05567374E 01 -0.61680865E 01I -0.92178287E 01 0.28996517E 01I

-0.14538863E 01 0.18207212E 01I 0.14304339E-00 -0.19185340E 01I

CH(3) SIZE = 2 BY 2

0.7[illegible]E 01 -0.39699985E 01I -0.82992715E 01 0.18467119E 01I

0.[illegible]E 01 -0.20590182E-00I -0.16957552E 01 -0.17815792E-00I

CH(4) SIZE = 2 BY 2

0.72746900E 01 -0.24152532E 01I -0.73959825E 01 0.11276747E 01I

0.23201058E 01 -0.78480651E 00I -0.25969680E 01 0.31905624E-00I

PUNCHED CARDS NOS. HW10 0 THRU HW10 8

OSCILLATORY CASE

1/K(R) = 0.80000000E 01

[illegible]

CH(1) SIZE = 2 BY 2

0.41085899E 02 -0.17848561E 02I -0.42376889E 02 0.80526985E 01I
0.85083166E 01 -0.32902742E 01I -0.10905226E 02 0.62052464E 00I

[illegible]

0.11986747E 02 -0.40591970E 01I -0.13297591E 02 0.16840269E 01I

CH(3) SIZE = 2 BY 2

[illegible]

CH(4) SIZE = 2 BY 2

0.29772104E 02 -0.48014827E 01I -0.29893397E 02 0.22108020E 01I
0.13175341E 02 -0.24483751E 01I -0.13452203E 02 0.12761046E 01I

[illegible]

[illegible] COEFFICIENTS BY SUPERSONIC STRIP THEORY

STEADY CASE

1/K(R) = 0.

[illegible]

CH(1) SIZE = 2 BY 2

0.81027073E 00 -0.81027073E 00

0.35425846E-00 -0.35425848E-00

[illegible]

0.33116364E-00 -0.33116364E-00

CH(3) SIZE = 2 BY 2

[illegible]

CH(4) SIZE = 2 BY 2

0.55431357E 00 -0.55431357E 00

0.26746202E-00 -0.26746202E-00

[illegible]

AERODYNAMIC INFLUENCE COEFFICIENTS BY SUPERSONIC STRIP THEORY 5

OSCILLATORY CASE

1/K(R) = 0.40000000E 01

M = 0.24999999E 01

NUMBER OF STRIPS = 4

CH(1) SIZE = 2 BY 2

0.61223587E 01 -0.39058710E 01I -0.62933545E 01 0.99004493E 00I

0.15446437E 01 0.31125329E-00I -0.20665466E 01 -0.12606335E 01I

CH(2) SIZE = 2 BY 2

0.96652514E 01 -0.27185035E 01I -0.57505243E 01 0.71339557E 00I

0.19906042E 01 -0.44966330E-01I -0.22760270E 01 -0.74438580E 00I

CH(3) SIZE = 2 BY 2

0.49522141E 01 -0.17355043E 01I -0.49906550E 01 0.46350735E-00I

0.20699120E 01 -0.14625692E-00I -0.22069827E 01 -0.41451148E-00I

CH(4) SIZE = 2 BY 2

0.43656130E 01 -0.10551950E 01I -0.43801361E 01 0.29555888E-00I

0.20787904E 01 -0.13237961E-00I -0.21390743E 01 -0.23801012E-00I

PUNCHED CARDS NOS. HM10 24 THRU HM10 32

```
AERODYNAMIC INFLUENCE COEFFICIENTS BY SUPERSONIC STRIP THEORY

                    OSCILLATORY CASE
                1/K(R) =    0.80000000E 01
                  M   =    0.24999999E 01
                  NUMBER OF STRIPS =    4

                    CH( 1) SIZE = 2 BY 2
0.25403119E 02 -0.78336976E 01I     -0.25574115E 02  0.19634566E 01I
0.10494554E 02 -0.86506670E 00I     -0.11016458E 02 -0.16577762E 01I

                    CH( 2) SIZE = 2 BY 2
0.23101085E 02 -0.54317252E 01I     -0.23186159E 02  0.14114305E 01I
0.10357052E 02 -0.72755752E 00I     -0.10642475E 02 -0.11151575E 01I

                    CH( 3) SIZE = 2 BY 2
0.20002794E 02 -0.34659603E 01I     -0.20041236E 02  0.91969582E 00I
0.94290049E 01 -0.52199290E 00I     -0.95768756E 01 -0.69380080E 00I

                    CH( 4) SIZE = 2 BY 2
0.17530102E 02 -0.21065729E 01I     -0.17544626E 02  0.58752020E 00I
0.88358944E 01 -0.33709711E-00I     -0.88961783E 01 -0.43284714E-00I

                PUNCHED CARDS NOS. HM10  33 THRU HM10  41
```

AERODYNAMIC INFLUENCE COEFFICIENTS BY SUPERSONIC STRIP THEORY

STEADY CASE

1/K(R) = 0.

M = 0.26999999E 01

NUMBER OF STRIPS = 4

CH(1) SIZE = 2 BY 2

0.47505847E-00 -0.47505847E-00

0.22051676E-00 -0.22051676E-00

CH(2) SIZE = 2 BY 2

0.42960136E-00 -0.42960136E-00

0.20614082E-00 -0.20614082E-00

CH(3) SIZE = 2 BY 2

0.37083109E-00 -0.37083109E-00

0.18159471E-00 -0.18159471E-00

CH(4) SIZE = 2 BY 2

0.32435972E-00 -0.32435972E-00

0.16648821E-00 -0.16648821E-00

PUNCHED CARDS NOS. HW10 42 THRU HW10 47

AERODYNAMIC INFLUENCE COEFFICIENTS BY SUPERSONIC STRIP THEORY

INPUT DATA

1 STALPS
2 MACH NUMBERS
3 REDUCED FREQUENCIES

COSINE LAMBDA = 0.80000000E 00
B(R) = 0.64999999E 01
S = [illegible]
[illegible] = [illegible]
[illegible] = [illegible]
C(T) = 0.80000000E 01
TAN LD = 0.75000000E 00
TAN TR = -0.50000000E 00

WITH TIP CORRECTION

DELTA Y (I)	B(I)	D(I)
0.46999999E 01	0.12281249E 02	0.11900000E 02
[illegible]	[illegible]	[illegible]
[illegible]	[illegible]	[illegible]
[illegible]	[illegible]	[illegible]

1/K (R) =	0.40000000E 01	0.80000000E 01	0.

[illegible]/C = [illegible]

[illegible] = [illegible]

R = 0.15000000E-00

[illegible] INTEGRALS

[illegible]	I2(K)	I3(K)	I4(K)	I5(K)	J1(K)	J2(K)
0.74999999E-02	-0.27333333E-01	-0.26716665E-01	-0.23411999E-01	-0.20409866E-01	0.34833332E-01	0.17108332E-01

J3(K)	J4(K)	K1(K)	K2(K)	K3(K)	L1(K)	L2(K)
[illegible]	0.69774664E-02	0.17724999E-01	0.12264666E-01	0.92852886E-02	0.68043330E-02	0.50654332E-02

```
AERODYNAMIC INFLUENCE COEFFICIENTS BY SUPERSONIC STRIP THEORY

                    OSCILLATORY CASE
              1/K(R) =    0.40000000E 01
                  M  =    0.17999999E 01
                  NUMBER OF STRIPS =    4

                  CH( 1) SIZE = 2 BY 2
 0.82001874E 01 -0.85972560E 01I     -0.94911763E 01  0.40570676E 01I
-0.58696458E 01  0.73110541E 01I      0.34727361E 01 -0.60698704E 01I

                  CH( 2) SIZE = 2 BY 2
 [illegible] 01 -0.61652784E 01I     -0.92159157E 01  0.28972358E 01I
-0.14499702E 01  0.18151077E 01I      0.14196405E-00 -0.19130098E 01I

                  CH( 3) SIZE = 2 BY 2
 [illegible] 01 -0.38842[illegible]E 01I     -0.81783251E 01  0.17803901E 01I
 [illegible] 00 -0.27579704E-00I     -0.14391680E 01 -0.13547597E-00I

                  CH( 4) SIZE = 2 BY 2
 0.60005280E 01 -0.19105424E 01I     -0.60936828E 01  0.84950338E 00I
 0.68430612E 00 -0.25560378E-00I     -0.81209405E 00  0.10747413E-00I

              PUNCHED CARDS NOS. HM10  48 THRU HM10  56
```

```
AERODYNAMIC INFLUENCE COEFFICIENTS BY SUPERSONIC STRIP THEORY

                    OSCILLATORY CASE
              1/K(R) =   0.80000000E 01
                  K   =   0.17999999E 01
                  NUMBER OF STRIPS =   4

                  CH( 1) SIZE = 2 BY 2
0.41085899E 02 -0.17848561E 02I     -0.42376889E 02  0.80526985E 01I
0.85083166E 01 -0.32902742E 01I     -0.10905226E 02  0.62052464E 00I

                  CH( 2) SIZE = 2 BY 2
0.38313001E 02 -0.12433063E 02I     -0.38974453E 02  0.56485263E 01I
0.11960503E 02 -0.40507598E 01I     -0.13268510E 02  0.16807653E 01I

                  CH( 3) SIZE = 2 BY 2
0.33479561E 02 -0.78497550E 01I     -0.33789778E 02  0.35471212E 01I
0.10972831E 02 -0.28939713E 01I     -0.11516255E 02  0.14093199E 01I

                  CH( 4) SIZE = 2 BY 2
0.24600406E 02 -0.38357250E 01I     -0.24693561E 02  0.16956007E 01I
0.45326774E 01 -0.91177386E 00I     -0.46604652E 01  0.50467691E 00I

              PUNCHED CARDS NOS. HM10  57 THRU HM10  65
```

AERODYNAMIC INFLUENCE COEFFICIENTS BY SUPERSONIC STRIP THEORY

STEADY CASE

1/K(R) = 0.

M = 0.17999999E 01

NUMBER OF STRIPS = 4

CH(1) SIZE = 2 BY 2

0.81027073E 00 -0.81027073E 00

0.35425846E-00 -0.35425848E-00

CH(2) SIZE = 2 BY 2

0.73322029E 00 -0.73322029E 00

0.33042052E-00 -0.33042052E-00

CH(3) SIZE = 2 BY 2

0.63104034E 00 -0.63104034E 00

0.24828923E-00 -0.24828923E-00

CH(4) SIZE = 2 BY 2

0.45828220E-00 -0.45828220E-00

0.94819973E-01 -0.94819972E-01

PUNCHED CARDS NOS. HM10 66 THRU HM10 71

```
AERODYNAMIC INFLUENCE COEFFICIENTS BY SUPERSONIC STRIP THEORY

                    OSCILLATORY CASE
              1/K(R) =    0.40000000E 01
                M    =    0.24999999E 01
                NUMBER OF STRIPS =    4

                    CH( 1) SIZE = 2 BY 2
0.61223587E 01 -0.39058710E 01I      -0.62933545E 01  0.99004493E 00I
0.15446437E 01  0.31125329E-00I      -0.20665466E 01 -0.12606335E 01I

                    CH( 2) SIZE = 2 BY 2
[illegible] 01 -0.27185035E 01I      -0.57503243E 01  0.71339557E 00I
0.19906042E 01 -0.44966330E-01I      -0.22760270E 01 -0.74438580E 00I

                    CH( 3) SIZE = 2 BY 2
[illegible] 01 -0.17338672E 01I      -0.49905977E 01  0.46189835E-00I
[illegible] 01 -0.14387206E-00I      -0.21775354E 01 -0.40944093E-00I

                    CH( 4) SIZE = 2 BY 2
0.38625441E 01 -0.92699184E 00I      -0.38768674E 01  0.25476145E-00I
0.10431063E 01 -0.32136280E-01I      -0.10783541E 01 -0.15464710E-00I

                  PUNCHED CARDS NOS. HM10  72 THRU HM10  80
```

AERODYNAMIC INFLUENCE COEFFICIENTS BY SUPERSONIC STRIP THEORY

OSCILLATORY CASE

```
1/K(R) =   0.80000000E 01
R      =   0.24999999E 01
NUMBER OF STRIPS =   4

CH( 1) SIZE = 2 BY 2
0.25403119E 02 -0.78336976E 01I     -0.25574115E 02  0.19634566E 01I
0.10494554E 02 -0.86506670E 00I     -0.11016458E 02 -0.16577762E 01I

CH( 2) SIZE = 2 BY 2
0.23101085E 02 -0.56317252E 01I     -0.23186159E 02  0.14114305E 01I
0.10357052E 02 -0.72755752E 00I     -0.10642475E 02 -0.11151575E 01I

CH( 3) SIZE = 2 BY 2
0.20004375E 02 -0.34634557E 01I     -0.20043153E 02  0.91695483E 00I
0.93136556E 01 -0.51393230E 00I     -0.94490296E 01 -0.68564465E 00I

CH( 4) SIZE = 2 BY 2
0.15526666E 02 -0.18542319E 01I     -0.15540989E 02  0.50872150E 00I
0.44747236E 01 -0.10564039E-00I     -0.45099715E 01 -0.28471817E-00I
```

PUNCHED CARDS NOS. HM10 81 THRU HM10 89

```
AERODYNAMIC INFLUENCE COEFFICIENTS BY SUPERSONIC STRIP THEORY

                    STEADY CASE
          1/K(R) =    0.
             M   =   0.24999999E 01
             NUMBER OF STRIPS =   4

            CH( 1) SIZE = 2 BY 2
        0.47505847E-00  -0.47505847E-00
        0.22051676E-00  -0.22051676E-00

            CH( 2) SIZE = 2 BY 2
        0.42960136E-00  -0.42960136E-00
        0.20614082E-00  -0.20614082E-00

            CH( 3) SIZE = 2 BY 2
        0.37087975E-00  -0.37087975E-00
        0.17916226E-00  -0.17916226E-00

            CH( 4) SIZE = 2 BY 2
        0.28739219E-00  -0.28739219E-00
        0.84551580E-01  -0.84551579E-01

          PUNCHED CARDS NOS. HM10  90 THRU HM10  95
```

B. Punched Output

1. A deck of punched cards (output) from this program is suitable as an input deck to other programs requiring the use of AICs.

2. All punched output is sequenced in order on Columns 73 through 80 starting with HM100000. The data appear in the following order:

   a. Card 1 contains $(V/b_r\omega)_1$, and M_1 (FORMAT 6E12.8).

   b. Card 2 contains m, the size (number of control points) of the AIC matrix and n, the number of strips (partitions) FORMAT (18I4).

   c. The AIC matrix punched in column binary form and its TRA card make up the remainder of the punched output for $(V/b_r\omega)_1$.

3. The order of statement (2) is repeated for all Mach numbers and reduced velocities per input deck.

4. Each matrix is punched in compact form by columns. Column 1 begins in origin 1 and Column 2 in location (1 + matrix size).

5. The oscillatory matrix is punched in the order: Column 1 (real), Column 1 (imaginary); Column 2 (real), Column 2 (imaginary); Column m (real), Column m (imaginary). In the steady case, all columns are real and are punched in order.

SECTION V

PROCESSING INFORMATION

A. Operation

STANDARD FORTRAN MONITOR system

B. Estimated Machine Time

T = time in minutes

ISTRIP = number of strips

JMACH = number of Mach numbers

KVBRW = number of reduced velocities

n = number of sets (decks) of input data

$$T = .5 + .03 \left[(ISTRIP \cdot JMACH \cdot KVBRW)_1 + (ISTRIP \cdot JMACH \cdot KVBRW)_2 + \cdot + \cdot + (ISTRIP \cdot JMACH \cdot KVBRW)_n \right]$$

C. Machine Components Used

Core storage: 6772

Standard FORTRAN input tape (NTAPE 2)

Standard FORTRAN output print tape (NTAPE 3)

Standard FORTRAN punch tape (NTAPE 7)

SECTION VI

PROGRAM NOTES

A. Subroutines Used

RDLN: reads and prints title cards

AEROP3: punch AIC matrix

BINPU: column binary punch

All other subroutines used are on library tapes.

B. Generalized Tapes

Input, print, and punch tapes in this coding are defined as Units 2, 3, and 12 respectively; however, these may be altered by placing the desired units on symbolic cards HM100054, HM100055, and HM100056.

SECTION VII

FLOW DIAGRAM

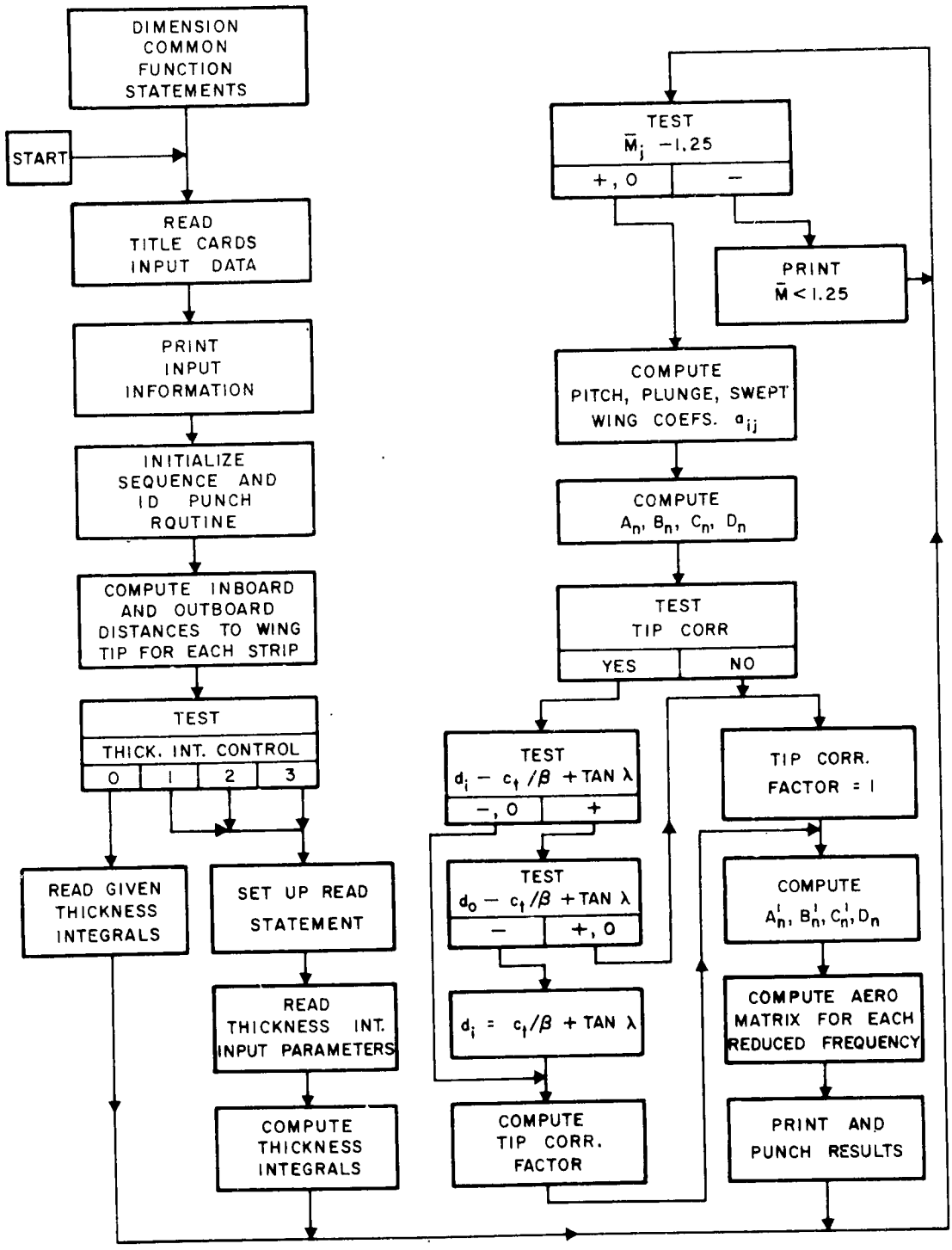

SECTION VIII

SYMBOLIC LISTING

A partial list of the principal FORTRAN symbols used in the program may be related to the physical notation as follows:

FORTRAN Notation	Physical Notation
BI	b_i
DI	d_i
DELY	Δy
XMACHS	M_N
VBRW	$V/b_r\omega$
XMC	x_m/c
TAU	τ
AR	r
DISTO	d_o
DISTI	d_i
CHI	C_{h_i}
XLHO	L_{h_o}
XLAO	L_{a_o}
XMAO	M_{a_o}
XMHO	M_{h_o}
AI1, AI2, . . . , AIN	$I_1, I_2, \ldots, I_n$
AJ1, AJ2, . . . , AJN	$J_1, J_2, \ldots, J_n$
AK1, AK2, . . . , AKN	$K_1, K_2, \ldots, K_n$

SYMBOLIC LISTING (continued)

FORTRAN Notation	Physical Notation
AL1, AL2, . . . , ALN	$L_1, L_2, \ldots, L_n$
B	β
BB1, BB2, . . . , BBN	$B_1, B_2, \ldots, B_n$
C1, C2, . . . , CN	$C_1, C_2, \ldots, C_n$
D1, D2, . . . , DN	$D_1, D_2, \ldots, D_n$
FF1, FF2, . . . , FFN	$f_1, f_2, \ldots, f_n$
ISTRIP	Number of strips
JMACH	Number of Mach numbers
KVBRW	Number of reduced frequencies
ISTHK	Thickness integral control
ISTIP	Tip correction control
NO PUNJ	Punch control
BR	b_r
SMS	s
CAPS	S
CBAR	$\bar{c}$
CT	c_t
TANLA	$\tan \Lambda$
TANLAM	$\tan \lambda$
COSLA	$\cos \Lambda$

The complete symbolic listing is given on the following pages.

```
C          S U P E R S O N I C   S T R I P   T H E O R Y                HM100001
C                                                                       HM100002
      DIMENSION  B1(25), XMC(25), AI5(25), DELY(25), AK2(25), A2(25),   HM100003
     1           D1(25), TAU(25), AJ1(25), XLHO(25), AK3(25), A3(25),   HM100004
     2           AR(25), AI1(25), AJ2(25), XLAO(25), AL1(25), A4(25),   HM100005
     3           C2(25), AI2(25), AJ3(25), XMHO(25), AL2(25), D1(25),   HM100006
     4           C3(25), AI3(25), AJ4(25), XMAO(25), BB1(25), D2(25),   HM100007
     5           C4(25), AI4(25), AK1(25), VBRW(50), BB2(25), D3(25),   HM100008
     6           D4(25), BB3(25), BB4(25), DISTO(25), DISTI(25),        HM100009
     7           XMACHS(25),  CH(2,4,25)                                HM100010
      COMMON     B1, D1, DELY, XMACHS, VBRW, XMC, TAU, AI1, AI2, AI3,   HM100011
     1           AR, DISTO, DISTI, AJ4, AK1, AI4, AI5, AJ1, AJ2, AJ3,CH HM100012
    1 FORMAT  ( 18I4 )                                                  HM100013
    2 FORMAT  ( 6E12.8 )                                                HM100014
    3 FORMAT  (1H1 20X, 44H AERODYNAMIC INFLUENCE COEFFICIENTS BY SUPER HM100015
     1        10HSONIC STRIP THEORY     )                               HM100016
    4 FORMAT  (1H0 49X, 11H INPUT DATA // 1H 47X, I12, 8H STRIPS  / 1H  HM100017
     1        46X, I12, 14H MACH NUMBERS  / 1H 44X, I12,  8H REDUCED   HM100018
     2       12H FREQUENCIES   // 1H  39X, 16HCOSINE LAMBDA = 1E16.8,  HM100019
     3      / 1H  48X, 7HB(R) =  1E16.8, /1H 51X, 4HS = 1E16.8, / 1H   HM100020
     4        51X, 4HS = 1E16.8, / 1H 48X, 7HGBAR = 1E16.8, / 1H 48X,  HM100021
     5        7HC(I) = 1E16.8, / 1H 47X, 9HTAN LD =  1E16.8, / 1H 47X, HM100022
     6        9HTAN TR =  1E16.8   )                                   HM100023
    5 FORMAT  (1H0  45X, 20HWITH TIP CORRECTION  / 1H    )             HM100024
    6 FORMAT  (1H0  43X, 23HWITHOUT TIP CORRECTION   /  1H    )         HM100025
    7 FORMAT  (1H  29X, 12HDELTA Y (I)  11X, 4HB(I)  15X, 4HD(I)  //    HM100026
     1        (1H  22X,  3E19.8 ) )                                    HM100027
    8 FORMAT  (1H0  9X, 10H1/K (R) =  4E21.8,  / (1H  19X,  4E21.8) )  HM100028
    9 FORMAT  (1H0 18X,  7HXH/C =  3E18.8  / (1H  22X, 3E18.8 ) )      HM100029
   10 FORMAT  (1H0 19X,  6HTAU =   3E18.8  / (1H  22X,  3E18.8 ) )     HM100030
   11 FORMAT  (1H0 21X,  4HR =    3E18.8  / (1H  22X,  3E18.8 ) )      HM100031
   12 FORMAT  (1H0 7X, 20HTHICKNESS INTEGRALS  // 10H     I1(K)  11X,  HM100032
     1        5HI2(K) 11X, 5HI3(K) 11X, 5HI4(K)  11X, 5HI5(K)   11X,   HM100033
     2        5HJ1(K) 11X, 5HJ2(K)  /   (1H   7E16.8 ) )               HM100034
   13 FORMAT  (1H0     J3(K)  11X,  5HJ4(K)  11X, 5HK1(K) 11X, 5HK2(K) HM100035
     1        11X,  5HK3(K)  11X,  5HL1(K)  11X, 5HL2(K)  /            HM100036
     2         ( 1H  7E16.8 ) )                                        HM100037
```

```
   14 FORMAT  ( 37H1  M BAR IS LESS THAN 1.25,  M BAR =      1F6.3  )     HM100038
   15 FORMAT  (1H0  47X,  18H OSCILLATORY CASE      )                     HM100039
   16 FORMAT  (1H0  49X,  13H STEADY CASE      )                          HM100040
   17 FORMAT  (1H 41X, 9H1/K(R) =  1E16.8  / 1H  43X, 7H K   =  1E16.8 /HM100041
     1          1H 44X, 19HNUMBER OF STRIPS =  1I3  )                     HM100042
   18 FORMAT  (1H0 44X, 3HCHI 1I2, 15H) SIZE = 2 BY 2     )               HM100043
   19 FORMAT  (1H  36X,  2E17.8 )                                         HM100044
   20 FORMAT  (1H. 19X,  2E16.8,5HI       2E16.8,  1HI )                  HM100045
      LOGEF(X)=LOGF(X)                                                    HM100046
      SOMEF(A,B,C,D,E,F)=(A0 K /A*(B C*(D/E*F))                           HM100047
                                                                          HM100048
C NTAPE 2  = INPUT TAPE                                                   HM100049
C NTAPE 3  =  PRINT OUTPUT TAPE                                           HM100050
C NTAPE 7  = PUNCH OUTPUT TAPE                                            HM100051
      NTAPE2 = 2                                                          HM100052
      NTAPE3 = 3                                                          HM100053
      NTAPE7 = 12                                                         HM100054
                                                                          HM100055
      JTWO=2                                                              HM100056
      NCARDS=0                                                            HM100057
      GAMA=1.4                                                            HM100058
   50 CALL RDLN  (NTAPE2, NTAPE3, 1)                                      HM100059
      CALL RDLN  (NTAPE2, NTAPE3, 2)                                      HM100060
      READ INPUT TAPE NTAPE2,  1, ISTRIP,JMACH,KVBRW,ISTHK,ISTIP,NOPUNJ HM100061
      READ INPUT TAPE NTAPE2,  2, BR,SMS,CAPS,CBAR,CT,TANLA,TANLAM,COSLAHM100062
      READ INPUT TAPE NTAPE2,  2, (DI(I),I=1,ISTRIP)                      HM100063
      READ INPUT TAPE NTAPE2,  2, (DI(I),I=1,ISTRIP)                      HM100064
      READ INPUT TAPE NTAPE2,  2, (DELY(I),I=1,ISTRIP)                    HM100065
      READ INPUT TAPE NTAPE2,  2, (XMACHS(J),J=1,JMACH)                   HM100066
      READ INPUT TAPE NTAPE2,  2, (VBRW(K),K=1,KVBRW)                     HM100067
      WRITE OUTPUT TAPE NTAPE3, 3                                         HM100068
      WRITE OUTPUT TAPE NTAPE3, 4, ISTRIP, JMACH,KVBRW,COSLA,BR,SMS,      HM100069
     1                             CAPS,CBAR,CT,TANLA,TANLAM              HM100070
      IF  (ISTIP)   51,52,51                                              HM100071
   51 WRITE OUTPUT TAPE NTAPE3, 5,                                        HM100072
      GOTO  53                                                            HM100073
      *                                                                   HM100074
      =                                                                   HM100075
```

```
   52 WRITE OUTPUT TAPE NTAPE3, 6,                                      HM100076
   53 WRITE OUTPUT TAPE NTAPE3, 7,  (DELY(I),BI(I),DI(I),I=1,ISTRIP)    HM100077
      WRITE OUTPUT TAPE NTAPE3, 8,  (VBRW(K),K=1,KVBRW)                 HM100078
                                                                        HM100079
      ALONG=0                                                           HM100080
      DO  54  I=1,ISTRIP                                                HM100081
   54 ALONG=DELY(I)+ALONG                                               HM100082
                                                                        HM100083
      DISTI(1)=ALONG                                                    HM100084
      DISTO(1)=ALONG-DELY(1)                                            HM100085
      DO  55  I=2,ISTRIP                                                HM100086
      DISTI(I)=DISTO(I-1)                                               HM100087
   55 DISTO(I)=DISTO(I-1)-DELY(I)                                       HM100088
                                                                        HM100089
      ISTRIP=ISTRIP                                                     HM100090
      DISTO(ISTRIP)=0                                                   HM100091
      IF (ISTHK-1)  57,60,56                                            HM100092
   56 IF (ISTHK-2)  59,59,58                                            HM100093
                                                                        HM100094
   57 READ INPUT TAPE NTAPE2,  2, AI1(1),AI2(1),AI3(1),AI4(1),AI5(1),   HM100095
     1                            AJ1(1), AJ2(1), AJ3(1), AJ4(1), AK1(1)HM100096
     2                           ,AK2(1), AK3(1), AL1(1), AL2(1)        HM100097
      IXMC=1                                                            HM100098
      JTAU=1                                                            HM100099
      KGAMA=1                                                           HM100100
      GOTO  68                                                          HM100101
                                                                        HM100102
   58 IXMC=ISTRIP                                                       HM100103
      JTAU=ISTRIP                                                       HM100104
      KGAMA=ISTRIP                                                      HM100105
      GOTO  61                                                          HM100106
                                                                        HM100107
   59 IXMC=1                                                            HM100108
      JTAU=ISTRIP                                                       HM100109
      KGAMA=1                                                           HM100110
      GOTO  61                                                          HM100111
                                                                        HM100112
   60 IXMC=1                                                            HM100113
```

```
      JTAU=1                                                            HM100114
      KGAMA=1                                                           HM100115
      READ INPUT TAPE NTAPE2,  2, (XMC(I),I=1,IXMC)                     HM100116
      READ INPUT TAPE NTAPE2,  2, (TAU(J),J=1,JTAU)                     HM100117
      READ INPUT TAPE NTAPE2,  2, (AR(K),K=1,KGAMA)                     HM100118
      WRITE OUTPUT TAPE NTAPE3, 9,   (XMC(I),I=1,IXMC)                  HM100119
      WRITE OUTPUT TAPE NTAPE3, 10,  (TAU(J),J=1,JTAU)                  HM100120
      WRITE OUTPUT TAPE NTAPE3, 11,  (AR(K),K=1,KGAMA)                  HM100121
                                                                        HM100122
                                                                        HM100123
C     THICKNESS INTEGRALS                                               HM100124
      DO  67  K=1,JTAU                                                  HM100125
      I=1                                                               HM100126
      M=1                                                               HM100127
      IF (JTAU-IXMC)  66,64,66                                          HM100128
   66 I=K                                                               HM100129
   64 XMC2=XMC(I)**2                                                    HM100130
      M=K                                                               HM100131
      TAUK=TAU(K)                                                       HM100132
      XMC3=XMC2*XMC(I)                                                  HM100133
      XMC4=XMC2*XMC2                                                    HM100134
      XMC5=XMC3*XMC2                                                    HM100135
      XMC6=XMC4*XMC2                                                    HM100136
      ARE=(1.0-AR(M))/((1.0-XMC(I))*(1.0-XMC(I)))                       HM100137
      AI1(K)=AR(M)*TAU(K)/2.0                                           HM100138
      AI2(K)=SOMEF(6.0,XMC(I),ARE,2.0,-3.0*XMC(I),XMC3)                 HM100139
      AI3(K)=SOMEF(12.0,XMC2,ARE,3.0,-4.0*XMC(I),XMC4)                  HM100140
      AI4(K)=SOMEF(20.0,XMC3,ARE,4.0,-5.0*XMC(I),XMC5)                  HM100141
      AI5(K)=SOMEF(30.0,XMC4,ARE,5.0,-6.0*XMC(I),XMC6)                  HM100142
      AJ1(K)=TAU(K)/6.0*(2.0+AR(M)*(1.0-XMC(I)))                        HM100143
      AJ2(K)=SOMEF(24.0,6.0-XMC2,ARE,3.0-8.0*XMC(I),6.0*XMC2,-XMC4)     HM100144
      AJ3(K)=SOMEF(60.0,10.0-XMC3,ARE,6.0-15.0*XMC(I),10.0*XMC2,-XMC5)  HM100145
      AJ4(K)=SOMEF(120.0,15.0-XMC4,ARE,10.0-24.0*XMC(I),15.0*XMC2,-XMC6)HM100146
      AK1(K)=TAU(K)/24.0*(6.0-4.0*XMC(I)*XMC2-(1.0-AR(M))*(1.0-XMC(I)))HM100147
     1*(1.0-XMC(I)))                                                    HM100148
      AK2(K)=SOMEF(120.0,20.0-10.0*XMC(I)+XMC3,ARE,4.0-15.0*XMC(I),     HM100149
     120.0*XMC2-10.0*XMC3,XMC5)                                         HM100150
      AK3(K)=SOMEF(360.0,45.0-20.0*XMC(I)+XMC4,ARE,10.0-36.0*XMC(I),    HM100151
     -
```

```
     145.0*XMC2-20.0*XMC3,XMC6)                                          HM100152
      AL1(K)=SOMEF(120.0,10.0-5.0*XMC2+2.0*XMC3,ARE,3.0-10.0*XMC(I),     HM100153
     110.0*XMC2-5.0*XMC4,2.0*XMC5)                                       HM100154
      AL2(K)=SOMEF(240.0,15.0-5.0*XMC2+XMC4,ARE,5.0-16.0*XMC(I),         HM100155
     115.0*XMC2-5.0*XMC4,XMC6)                                           HM100156
   67 CONTINUE                                                           HM100157
                                                                         HM100158
                                                                         HM100159
C     INFLUENCE COEFFICIENTS DUE TO PITCH-PLUNGE-SWEEP                   HM100160
   68 WRITE OUTPUT TAPE NTAPE3, 12,  (AI1(K),AI2(K),AI3(K),AI4(K),AI5(K)HM100161
     1                              ,AJ1(K),AJ2(K),K=1,JTAU)            HM100162
      WRITE OUTPUT TAPE NTAPE3, 13,  (AJ3(K),AJ4(K),AK1(K),AK2(K),AK3(K)HM100163
     1                              ,AL1(K),AL2(K),K=1,JTAU)            HM100164
                                                                         HM100165
      DO 106  J=1,JMACH                                                  HM100166
      EM=XMACHS(J)*COSLA                                                 HM100167
      IF  (EM-1.25)  70,71,71                                            HM100168
   70 WRITE OUTPUT TAPE NTAPE3, 14,  EM                                  HM100169
      GOTO  106                                                          HM100170
                                                                         HM100171
   71 EM2=EM*EM                                                          HM100172
      B=SQRTF(EM2-1.0)                                                   HM100173
      B2=B*B                                                             HM100174
      B3=B2*B                                                            HM100175
      B4=B2*B2                                                           HM100176
      B5=B2*B3                                                           HM100177
      B6=B3*B3                                                           HM100178
      B8=B4*B4                                                           HM100179
      EN=(GAMA+1.0)/2.0*EM2/B2                                           HM100180
      A01=-4.0/B*COSLA                                                   HM100181
      A02=-4.0/B2*(EM2*EN-2.0)                                           HM100182
      A11=8.0/B3*(2.0-EM2)*COSLA                                         HM100183
      A12=8.0/B*COSLA                                                    HM100184
      A13=16.0*EM2/B4*(EN-1.0)                                           HM100185
      A14=8.0/B2*(EM2*EN-2.0)                                            HM100186
      A15=8.0/B4*(2.0-EM2)*(EM2*EN-1.)                                   HM100187
      A21=4.0/B5*(EM2+2.0)*COSLA                                         HM100188
      A22=16.0/B3*COSLA                                                  HM100189
```

```
      A23=8.0*EM2/B6*(3.0*(3.0*EM2-2.0)*EN-2.0*(5.0*EM2-3.0))
      A24=8.0*EM2/B4*(4.0*EN-5.0)
      A25=4.0*EM2/B6*((16.0-7.0*EM2)*EN+4.0*(2.0*EM2-3.0))
      A26=16.0*EM2/B4*(EN-1.0)
      A27=4.0*EM2/B6*((EM2+2.0)*EN-4.0)
      A31=-8.0*EM2/(3.0*B6*B)*(EM2+4.)*COSLA
      A32=-24.0*EM2/B5*COSLA
      A33=16.0*EM2/B8*((17.0*EM2*EM2-10.0*EM2-4.0)*EN-(5.0*EM2
     1-2.0)*(4.0*EM2-1.0))
      A34=16.0*EM2/B6*(6.0*EM2-(5.0*EM2-2.0)*EN)
      A35=16.0*EM2/B8*(7.0*EM2*(2.0*EM2-1.0)-(12.0*EM2*EM2-3.0*EM2
     1-4.0)*EN)
      A36=8.0*EM2/B6*(2.0*(EM2+1.0)-(EM2+8.0)*EN)
      A37=8.0*EM2/B8*((3.0*EM2+2.0)-(3.0*EM2+4.0)*EN)
      A38=8.0*EM2/B6*(2.0*(EM2+1.0)-3.0*EM2*EN)
      A39=8.0*EM2/(3.0*B8)*((5.0*EM2+2.0)-EM2*EN*(EM2+4.0))

      DO  72  I=1,JTAU
      A2(I)=-.125*(.5*A22+AJ1(I)*A24+AI2(I)*A26)
      A3(I)=-.125*(A12+AI1(I)*A14)
      A4(I)=-.125*(1.0/3.0*A32+AK1(I)*A34+AJ2(I)*A36+AI3(I)*A38)
      BB1(I)=.25*(A01+AI1(I)*A02)
      BB2(I)=.25*(1.0/3.0*A21+AK1(I)*A23+AJ2(I)*A25+AI3(I)*A27)
      BB3(I)=.25*(.5*A11+AJ1(I)*A13+AI2(I)*A15)
      BB4(I)=.25*(.25*A31+AL1(I)*A33+AK2(I)*A35+AJ3(I)*A37
     1+AI4(I)*A39)
      C2(I)=-.25*(1.0/3.0*A22+AJ2(I)*A24+AI3(I)*A26)
      C3(I)=-.25*(.5*A12+AI2(I)*A14)
      C4(I)=-.25*(.25*A32+AK2(I)*A34+AJ3(I)*A36+AI4(I)*A38)
      D1(I)=.5*(.5*A01+AI2(I)*A02)
      D2(I)=.5*(.25*A21+AK2(I)*A23+AJ3(I)*A25+AI4(I)*A27)
      D3(I)=.5*(1.0/3.0*A11+AJ2(I)*A13+AI3(I)*A15)
      D4(I)=.5*(.2*A31+AL2(I)*A33+AK3(I)*A35+AJ4(I)*A37+AI5(I)*A39)
   72 CONTINUE

C     TIP CORRECTION
C     .636619772 = 2/PI
      DO  90  I=1,ISTRIP
```

```
      IF  (ISTIP)   74,73,74                                            HM100228
   73 FF1=1.                                                            HM100229
      FF2=1.                                                            HM100230
      FF3=1.                                                            HM100231
      FF4=1.                                                            HM100232
      FF5=1.                                                            HM100233
      GOTO  86                                                          HM100234
                                                                        HM100235
   74 BETA=(XMACHS(J)**2-1.)**.5                                        HM100236
      SAVE=SQRT((1.0+TANLA/BETA)                                        HM100237
      F1=.636619772*ATANF(.5*SAVE)                                      HM100238
      F2=.636619772*ATANF(2.0*SAVE)                                     HM100239
      E=1.0                                                             HM100240
      E1=1.0/.096*(.8*F1-.2*F2+.096)                                    HM100241
      E2=1.0/.096*(1.8*F1-1.2*F2+.6)                                    HM100242
      E3=1.0/.096*(F1-F2+.6)                                            HM100243
      DEEP=CT/(BETA+TANLAM)                                             HM100244
      IF (DISTI(I)-DEEP)  77,77,75                                      HM100245
                                                                        HM100246
   75 IF (DISTO(I)-DEEP)  76,73,73                                      HM100247
                                                                        HM100248
   76 DISTI(I)=DEEP                                                     HM100249
C     DI/CT*TAN LAMBDA EQUAL TO OR GREATER THAN .25                     HM100250
   77 BETA2=BETA**2                                                     HM100251
      BETA3=BETA2*BETA                                                  HM100252
      BETA4=BETA2*BETA2                                                 HM100253
      BETA5=BETA2*BETA3                                                 HM100254
      CT2=CT*CT                                                         HM100255
      CT3=CT*CT2                                                        HM100256
      TANL2=TANLAM*TANLAM                                               HM100257
      TANL3=TANL2*TANLAM                                                HM100258
      DISTI2=DISTI(I)*DISTI(I)                                          HM100259
      DISTI3=DISTI(I)*DISTI2                                            HM100260
      DISTI4=DISTI2*DISTI2                                              HM100261
      DISTI5=DISTI2*DISTI3                                              HM100262
      DISTI6=DISTI3*DISTI3                                              HM100263
      DISTO2=DISTO(I)*DISTO(I)                                          HM100264
      DISTO3=DISTO2*DISTO(I)                                            HM100265
```

```
      DISTO4=DISTO2*DISTO2                                              HM100266
      DISTO5=DISTO2*DISTO3                                              HM100267
      DISTO6=DISTO3*DISTO3                                              HM100268
      CTDO=CT-DISTO(I)*TANLAM                                           HM100269
      CTDI=CT-DISTI(I)*TANLAM                                           HM100270
      TANL4=TANL2*TANL2                                                 HM100271
      CT4=CT2*CT2                                                       HM100272
      CT5=CT3*CT2                                                       HM100273
                                                                        HM100274
      IF  (ABSF(DISTI(I)/CT*TANLAM)-.25)   82,78,78                     HM100275
                                                                        HM100276
   78 IF  (DISTO(I))      79,80,79                                      HM100277
   79 CONTINUE                                                          HM100278
      R11=BETA/2.0*(-CT2/TANL2*LOGEF(CTDO/CTDI)+DISTO2*LOGEF(CTDO       HM100279
     1/(BETA*DISTO(I)))-DISTI2*LOGEF(CTDI/(BETA*DISTI(I)))*CT/TANLAM*   HM100280
     2(DISTI(I)-DISTO(I)))                                              HM100281
      R12=BETA2*(.5*(1.0/BETA+1.0/TANLAM)*(DISTI2-DISTO2)*CT/TANL2      HM100282
     1*(DISTI(I)-DISTO(I))-CT2/TANL3*LOGEF(CTDO/CTDI))                  HM100283
      R13=BETA3/2.0*(.5*(DISTI2-DISTO2)*(1.0/TANL2-1.0/BETA2)+2.0/TANL3 HM100284
     1*CT*(DISTI(I)-DISTO(I))-3.0/TANL4*CT2*LOGEF(CTDO/CTDI)+           HM100285
     2CT3/TANL4*(1.0/CTDI-1.0/CTDO))                                    HM100286
      R22=BETA2/3.0*(-DISTO4*LOGEF(CTDO/(BETA*DISTO(I)))*DISTI3         HM100287
     1*LOGEF(CTDI/(BETA*DISTI(I)))*CT3/TANL3*LOGEF(CTDO/CTDI)           HM100288
     2-CT/(2.0*TANLAM)*(DISTI2-DISTO2)-CT2/TANL2*(DISTI(I)-DISTO(I)))   HM100289
      R23=BETA3*(-1.0/3.0*(DISTI3-DISTO3)*(1.0/BETA+1.0/TANLAM)-CT/(2.0*HM100290
     1TANL2)*(DISTI2-DISTO2)-CT2/TANL3*(DISTI(I)-DISTO(I))+             HM100291
     2CT3/TANL4*LOGEF(CTDO/CTDI))                                       HM100292
      R33=BETA3/4.0*(DISTO4*LOGEF(CTDO/(BETA*DISTO(I)))-DISTI4*LOGEF(   HM100293
     1CTDI/(BETA*DISTI(I)))-CT4/TANL4*LOGEF(CTDO/CTDI)+CT/3.0*(DISTI3-  HM100294
     2DISTO3)/TANLAM+CT2/(2.0*TANL2)*(DISTI2-DISTO2)+CT3/TANL3*(DISTI(I)HM100295
     3-DISTO(I)))                                                       HM100296
      GOTO  81                                                          HM100297
                                                                        HM100298
   80 CONTINUE                                                          HM100299
      R11=BETA/2.0*(-CT2/TANL2*LOGEF(CTDO/CTDI)-DISTI2*LOGEF(CTDI/      HM100300
     1(BETA*DISTI(I)))+CT/TANLAM*DISTI(I))                              HM100301
      R12=BETA2*(.5*DISTI2*(1./BETA+1./TANLAM)+CT/TANL2*DISTI(I)        HM100302
     1-CT2/TANL3*LOGEF(CTDO/CTDI))                                      HM100303
```

```
      R13=BETA3/2.*(.5*DISTI2*(1./TANL2-1./BETA2)+2./TANL3
     1*CT*DISTI(I)-3./TANL4*CT2*LOGEF(CTDO/CTDI)+CT3/TANL4*
     2(1./CTDI-1./CTDO))
      R22=BETA2/3.*(DISTI3*LOGEF(CTDI/(BETA*DISTI(I)))*CT3/TANL3
     1*LOGEF(CTDO/CTDI)-CT/(2.*TANLAM)*DISTI2-CT2/TANL2*DISTI(I))
      R23=BETA3*(-1./3.*DISTI3*(1./BETA+1./TANLAM)-CT/(2.*TANL2)*
     1DISTI2-CT2/TANL3*DISTI(I)+CT3/TANL4*LOGEF(CTDO/CTDI))
      R33=BETA3/4.*(-DISTI4*LOGEF(CTDI/(BETA*DISTI(I)))-CT4/
     1TANL4*LOGEF(CTDO/CTDI)*CT/3.*DISTI3/TANLAM*CT2/(2.*TANL2)
     2*DISTI2*CT3/TANL3*DISTI(I))

C     RMN COMMON
   81 CONTINUE
      R10=.5*(2.*CT*(DISTI(I)-DISTO(I))-(DISTI2-DISTO2)*(BETA+
     1TANLAM))
      R20=1.0/6.0*(3.0*CT2*(DISTI(I)-DISTO(I))-3.0*CT*TANLAM*(DISTI2-
     1DISTO2)-(DISTI3-DISTO3)*(BETA2-TANL2))
      R21=BETA*(1.0/3.0*(DISTI3-DISTO3)*(BETA+TANLAM)-.5*(DISTI2
     1-DISTO2)*CT)
      R30=1.0/12.0*(4.0*CT3*(DISTI(I)-DISTO(I))-6.0*CT2*TANLAM*
     1(DISTI2-DISTO2)+4.0*CT*TANL2*(DISTI3-DISTO3)-(DISTI4-DISTO4)*
     2(BETA3+TANL3))
      R31=BETA/2.0*(.25*(DISTI4-DISTO4)*(BETA2-TANL2)+2.0/3.0*(DISTI3
     1-DISTO3)*CT*TANLAM-.5*(DISTI2-DISTO2)*CT2)
      R32=BETA2*(-.25*(DISTI4-DISTO4)*(BETA+TANLAM)+1.0/3.0*(DISTI3
     1-DISTO3)*CT)
      R40=.05*(5.0*CT4*(DISTI(I)-DISTO(I))-10.0*CT3*TANLAM*(DISTI2
     1-DISTO2)+10.0*CT2*TANL2*(DISTI3-DISTO3)-5.0*CT*TANL3*
     2(DISTI4-DISTO4)-(DISTI5-DISTO5)*(BETA4-TANL4))
      R41=BETA/3.*(.2*(DISTI5-DISTO5)*(BETA3+TANL3)-.75*(DISTI4
     1-DISTO4)*CT*TANL2+(DISTI3-DISTO3)*CT2*TANLAM-.5*(DISTI2
     2-DISTO2)*CT3)
      R42=BETA2/2.0*(-.2*(DISTI5-DISTO5)*(BETA2-TANL2)-.5*(DISTI4
     1-DISTO4)*CT*TANLAM+1.0/3.0*(DISTI3-DISTO3)*CT2)
      R43=BETA3*(.2*(DISTI5-DISTO5)*(BETA+TANLAM)-.25*
     1(DISTI4-DISTO4)*CT)
      R50=1.0/30.0*(6.0*CT5*(DISTI(I)-DISTO(I))-15.0*CT4*TANLAM*
     1(DISTI2-DISTO2)+20.0*CT3*TANL2*(DISTI3-DISTO3)-15.0*
```

```
      2CT2*TANL3*(DISTI4-DISTO4)+6.0*CT*TANL4*(DISTI5-DISTO5)
      3-(DISTI6-DISTO6)*(BETA5+TANL5))
      R51=BETA/4.0*(1.0/6.0*(DISTI6-DISTO6)*(BETA4-TANL4)+.8*
     1(DISTI5-DISTO5)*CT*TANL3-1.5*(DISTI4-DISTO4)*CT2*
     2TANL2*4.0/3.0*(DISTI3-DISTO3)*CT3*TANLAM-.5*(DISTI2-DISTO2)
     3*CT4)
      R52=BETA2/3.0*(-1.0/6.0*(DISTI6-DISTO6)*(BETA3+TANL3)+.6*
     1(DISTI5-DISTO5)*CT*TANL2-.75*(DISTI4-DISTO4)*CT2*TANLAM
     2*1.0/3.0*(DISTI3-DISTO3)*CT3)
      R53=BETA3/2.0*(1.0/6.*(DISTI6-DISTO6)*(BETA2-TANL2)+2.0/5.0
     1*(DISTI5-DISTO5)*CT*TANLAM-.25*(DISTI4-DISTO4)*CT2)
      GOTO  85

C     RMN FOR LAMBDA = 0
C     RMN FOR SMALL VALUES OF LAMBDA
   82 CONTINUE
      DISTI7=DISTI4*DISTI3
      DISTI8=DISTI4*DISTI4
      DISTO7=DISTO4*DISTO3
      DISTO8=DISTO4*DISTO4
      CT6=CT3*CT3
      CT7=CT3*CT4
      CT8=CT4*CT4
      RAT1=(DISTI(I)-DISTO(I))/CT
      RAT2=(DISTI2-DISTO2)/CT2
      RAT3=(DISTI3-DISTO3)/CT3
      RAT4=(DISTI4-DISTO4)/CT4
      RAT5=(DISTI5-DISTO5)/CT5
      RAT6=(DISTI6-DISTO6)/CT6
      RAT7=(DISTI7-DISTO7)/CT7
      RAT8=(DISTI8-DISTO8)/CT8
      RAT9=(DISTI4*DISTI5-DISTO4*DISTO5)/(CT4*CT5)
      RAT10=(DISTI5*DISTI5-DISTO5*DISTO5)/(CT5*CT5)
      RAT11=(DISTI6*DISTI5-DISTO6*DISTO5)/(CT5*CT6)
      RAT12=(DISTI6*DISTI6-DISTO6*DISTO6)/(CT6*CT6)
      RAT13=(DISTI7*DISTI6-DISTO7*DISTO6)/(CT6*CT7)
      RAT14=(DISTI7*DISTI7-DISTO7*DISTO7)/(CT7*CT7)
      RAT15=(DISTI7*DISTI8-DISTO7*DISTO8)/(CT7*CT8)
      *
      *
```

```
      TANL5=TANL2*TANL3                                                 HM100380
      TANL6=TANL3*TANL3                                                 HM100381
      TANL7=TANL3*TANL4                                                 HM100382
      TANL8=TANL4*TANL4                                                 HM100383
      TANL9=TANL4*TANL5                                                 HM100384
      TANL10=TANL5*TANL5                                                HM100385
      TANL11=TANL5*TANL6                                                HM100386
      TANL12=TANL6*TANL6                                                HM100387
      TANL13=TANL6*TANL7                                                HM100388
      TANL14=TANL7*TANL7                                                HM100389
      TANL15=TANL8*TANL7                                                HM100390
                                                                        HM100391
C     SERIES SOLUTIONS FOR VARIOUS RMN                                  HM100392
      IF  (DISTO(I))    83,84,83                                        HM100393
   83 CONTINUE                                                          HM100394
      R11=BETA/2.0*(DISTO2*LOGEF(CTDO/(BETA*DISTO(I)))-DISTI2*LOGEF(CTDIHM100395
     1/(BETA*DISTI(I)))-CT2*(.5*RAT2+TANLAM/3.0*                        HM100396
     2RAT3+TANL2/4.0*RAT4+TANL3/5.0*RAT5+TANL4/6.0*RAT6+TANL5/7.0*      HM100397
     3RAT7+TANL6/8.0*RAT8+TANL7/9.0*RAT9+TANL8/10.0*RAT10+TANL9/11.0*   HM100398
     4RAT11))                                                           HM100399
      R12=BETA2*(.5/BETA*(DISTI2-DISTO2)-CT2*(1.0/3.0*RAT3+             HM100400
     1TANLAM/4.0*RAT4+TANL2/5.0*RAT5+TANL3/6.0*RAT6+TANL4/7.0*RAT7+     HM100401
     2TANL5/8.0*RAT8+TANL6/9.0*RAT9+TANL7/10.0*RAT10+TANL8/11.0*RAT11+  HM100402
     3TANL9/12.0*RAT12))                                                HM100403
      R13=.5*BETA3*(-.5/BETA2*(DISTI2-DISTO2)+1.0/(CTDI*CTDO)*(         HM100404
     1(DISTI4-DISTO4)-DISTI(I)*DISTO(I)/CT*TANLAM*(DISTI3-DISTO3))-3.0  HM100405
     2*CT2*(1.25*RAT5+TANLAM/5.0*RAT5+TANL2/6.0*RAT6+TANL3/7.0*RAT7     HM100406
     3+TANL4/8.0*RAT8+TANL5/9.0*RAT9+TANL5/10.0*RAT10+TANL7/11.0*RAT11+ HM100407
     4TANL8/12.0*RAT12+TANL9/13.0*RAT13))                               HM100408
      R22=BETA2/3.0*(DISTI3*LOGEF(CTDI/(BETA*DISTI(I)))-DISTO3*         HM100409
     1LOGEF(CTDO/(BETA*DISTO(I))))+CT3*(1.0/3.0*RAT3+.25*TANLAM*RAT4+   HM100410
     2TANL2/5.0*RAT5+TANL3/6.0*RAT6+TANL4/7.0*RAT7+TANL5/8.0*RAT8+      HM100411
     3TANL6/9.0*RAT9+TANL7/10.0*RAT10+TANL8/11.0*RAT11+TANL9/12.0*RAT12)HM100412
     4)                                                                 HM100413
      R23=BETA3*(-1.0/13.0*BETA)*(DISTI3-DISTO3)*CT3*(1.25*RAT4+TANLAM  HM100414
     1/5.0*RAT5+TANL2/6.0*RAT6+TANL3/7.0*RAT7+TANL4/8.0*RAT8            HM100415
     2+TANL5/9.0*RAT9+TANL6/10.0*RAT10+TANL7/11.0*RAT11+TANL8/          HM100416
     312.0*RAT12+TANL9/13.0*RAT13))                                     HM100417
```

```
      R33=.25*BETA3*(DISTO4*LOGEF(CTDO/(BETA*DISTO(I)))-DISTI4*
     1LOGEF(CTDI/(BETA*DISTI(I))))-CT4*(.25*RAT4+TANLAM/5.0*RAT5+
     2TANL2/6.0*RAT6+TANL3/7.0*RAT7+TANL4/8.0*RAT8+TANL5/9.0*
     3RAT9+TANL6/10.0*RAT10+TANL7/11.0*RAT11+TANL8/12.0*RAT12+
     4TANL9/13.0*RAT13))
      GOTO  81

   84 CONTINUE
      R11=BETA/2.*(-DISTI2*LOGEF(CTDI/(BETA*DISTI(I)))-CT2*(.5*
     1RAT2+TANLAM/3.*RAT3+TANL2/4.*RAT4+TANL3/5.*RAT5+TANL4
     2/6.*RAT6+TANL5/7.*RAT7+TANL6/8.*RAT8+TANL7/9.*RAT9+
     3TANL8/10.*RAT10+TANL9/11.*RAT11))
      R12=BETA2*(.5/BETA*DISTI2-CT2*(1./3.*RAT3+TANLAM/4.*
     1RAT4+TANL2/5.*RAT5+TANL3/6.*RAT6+TANL4/7.*RAT7+TANL5
     2/8.*RAT8+TANL6/9.*RAT9+TANL7/10.*RAT10+TANL8/11.*RAT11
     3+TANL9/12.*RAT12))
      R13=-.5*BETA3*(-.5/BETA2*DISTI2+1./(CTDI*CTDO)*DISTI4
     1-3.*CT2*(.25*RAT4+TANLAM/5.*RAT5+TANL2/6.*RAT6+TANL3
     2/7.*RAT7+TANL4/8.*RAT8+TANL5/9.*RAT9+TANL6/10.*RAT10
     3+TANL7/11.*RAT11+TANL8/12.*RAT12+TANL9/13.*RAT13))
      R21=BETA2/3.*(DISTI3*LOGEF(CTDI/(BETA*DISTI(I)))+CT3*
     1(1./3.*RAT3+.25*TANLAM*RAT4+TANL2/5.*RAT5+TANL3/6.*
     2RAT6+TANL4/7.*RAT7+TANL5/8.*RAT8+TANL6/9.*RAT9+
     3TANL7/10.*RAT10+TANL8/11.*RAT11+TANL9/12.*RAT12))
      R23=BETA3*(-1./(3.*BETA)*DISTI3+CT3*(.25*RAT4+TANLAM/5.
     1*RAT5+TANL2/6.*RAT6+TANL3/7.*RAT7+TANL4/8.*RAT8+TANL5/
     2*RAT9+TANL6/10.*RAT10+TANL7/11.*RAT11+TANL8/12.*RAT12
     3+TANL9/13.*RAT13))
      R33=-.25*BETA3*(-DISTI4*LOGEF(CTDI/(BETA*DISTI(I)))-CT4*
     1(.25*RAT4+TANLAM/5.*RAT5+TANL2/6.*RAT6+TANL3/7.*RAT7+
     2TANL4/8.*RAT8+TANL5/9.*RAT9+TANL6/10.*RAT10+TANL7/11.*RAT11
     3+TANL8/12.*RAT12+TANL9/13.*RAT13))
      GOTO  81

   85 CONTINUE
      Q1=E  *R10+E1*R11+E2*R12+E3*R13
      Q2=E  *R20+E1*R21+E2*R22+E3*R23
      Q3=E  *R30+E1*R31+E2*R32+E3*R33
      *
      *
```

```
      Q4=E  *R40+E1*R41+E2*R42+E3*R43                                   HM100456
      Q5=E  *R50+E1*R51+E2*R52+E3*R53                                   HM100457
      EEE=(DISTO(I)*DELY(I)/2.0)*TANLA                                  HM100458
      QQ2=1.0-(1.0/(2.0*BI(I)*DELY(I)))*Q1                              HM100459
      QQ3=1.-(.5/(BI(I)*BI(I)*DELY(I)))*(Q2+EEE*Q1)                     HM100460
      FF3=1.-.375/(BI(I)**3*DELY(I))*(Q3+2.*EEE*Q2+EEE*EEE*Q1)          HM100461
      FF4=1.-.25/(BI(I)**4*DELY(I))*(Q4+3.*EEE*Q3+3.*(EEE*EEE)*Q2+      HM100462
     1EEE*(EEE*EEE)*Q1)                                                 HM100463
      QQ5=1.-5./(32.*BI(I)**5*DELY(I))*(Q5+4.*EEE*Q4+6.*(EEE*EEE)*Q3    HM100464
     1+4.*EEE*(EEE*EEE)*Q2+(EEE*EEE)*(EEE*EEE)*Q1)                      HM100465
                                                                        HM100466
   86 L=I                                                               HM100467
      IF  (JTAU-ISTRIP)   89,88,89                                      HM100468
   88 L=I                                                               HM100469
                                                                        HM100470
      A2(I)=FF2*A2(L)                                                   HM100471
      A3(I)=FF1*A3(L)                                                   HM100472
      A4(I)=FF3*A4(L)                                                   HM100473
      BB1(I)=FF1*BB1(L)                                                 HM100474
      BB2(I)=FF3*BB2(L)                                                 HM100475
      BB3(I)=FF2*BB3(L)                                                 HM100476
      BB4(I)=FF4*BB4(L)                                                 HM100477
      C2(I)=FF3*C2(L)                                                   HM100478
      C3(I)=FF2*C3(L)                                                   HM100479
      C4(I)=FF4*C4(L)                                                   HM100480
      D1(I)=FF2*D1(L)                                                   HM100481
      D2(I)=FF4*D2(L)                                                   HM100482
      D3(I)=FF3*D3(L)                                                   HM100483
      D4(I)=FF5*D4(L)                                                   HM100484
   90 CONTINUE                                                          HM100485
                                                                        HM100486
   91 DO  105 K=1,KVBRW                                                 HM100487
      WRITE OUTPUT TAPE NTAPE3, 3                                       HM100488
      IF (WORNIF)   93,93,92                                            HM100489
   92 WRITE OUTPUT TAPE NTAPE3, 15                                      HM100490
      GOTO  94                                                          HM100491
                                                                        HM100492
   93 WRITE OUTPUT TAPE NTAPE3, 16                                      HM100493
```

```
   94 WRITE OUTPUT TAPE NTAPE3, 17,  VBRW(K),XMACHS(J),ISTRIP
      N=0
      DO  103 I=1,ISTRIP
      IF (VBRW(K))   97,97,98
C     OSCILLATORY AERODYNAMIC COEFFICIENTS-STEADY CASE
   97 XLHO(1)=0.
      XLHO(2)=0.
      XLAO(1)=BB1(I)
      XLAO(2)=0.
      XMHO(1)=0.
      XMHO(2)=0.
      XMAO(1)=D1(I)
      XMAO(2)=0.
      EX=8.0*CBAR/CAPS                          *DELY(I)
      GOTO  99

   98 CAY=BI(I)/(VBRW(K)*BR)
      XLHO(1)=A2(I)
      XLHO(2)=A3(I)/CAY+A4(I)*CAY
      XLAO(1)=BB1(I)/(CAY*CAY)+BB2(I)
      XLAO(2)=BB3(I)/CAY+BB4(I)*CAY
      XMHO(1)=C2(I)
      XMHO(2)=C3(I)/CAY+C4(I)*CAY
      XMAO(1)=D1(I)/(CAY*CAY)+D2(I)
      XMAO(2)=D3(I)/CAY+D4(I)*CAY
      EX=4.0*(BI(I)/BR)*(BI(I)/BR)*DELY(I)/SMS
   99 ZEE=BI(I)/DI(I)
      WHY=1.0+.5*ZEE

      DO  100  N=1,2
      CH(1,N,I)=EX*(WHY**2*XLHO(N)-ZEE*WHY*(XLAO(N)+XMHO(N))+ZEE**2
     1            *XMAO(N))
      CH(1,N+2,I)=EX*(-.5*ZEE*WHY*XLHO(N)+.5*(ZEE**2)*XMHO(N)+ZEE*WHY
     1            *XLAO(N)-ZEE**2*XMAO(N))
      CH(2,N,I)=EX*(-.5*ZEE*WHY*XLHO(N)+ZEE*WHY*XMHO(N)+.5*(ZEE**2)
```

```
     1            *XLAO(N)-(ZEE**2)*XMAO(N))                                HM100532
      CH(2,N+2,I)=EX*((ZEE**2)*(.25*XLHO(N)-.5*(XLAO(N)+XMHO(N))+          HM100533
     1            XMAO(N)))                                                HM100534
  100 CONTINUE                                                             HM100535
                                                                           HM100536
      M=M+1                                                                HM100537
      WRITE OUTPUT TAPE NTAPE3, 18,  M                                     HM100538
      IF (VBRW(K))  101,101,102                                            HM100539
  101 WRITE OUTPUT TAPE NTAPE3, 19,  CH(1,1,I),CH(1,3,I),CH(2,1,I),        HM100540
     1                               CH(2,3,I)                             HM100541
      GOTO  103                                                            HM100542
  102 WRITE OUTPUT TAPE NTAPE3, 20,((CH(I1,I2,I),I2=1,4),I1=1,2)           HM100543
                                                                           HM100544
  103 CONTINUE                                                             HM100545
      IF  (NOPUNJ)  105,104,105                                            HM100546
                                                                           HM100547
  104 CALL AEROP3 (VBRW(K),XMACHS(J),CH,ISTRIP,NCARDS,NTAPE3,NTAPE7)       HM100548
                                                                           HM100549
  105 CONTINUE                                                             HM100550
  106 CONTINUE                                                             HM100551
      GOTO  50                                                             HM100552
      END(1,0,0,0,0,0,0,0,0,1,0,0,0,0,0)
```

STORAGE NOT USED BY PROGRAM

DEC	OCT	DEC	OCT
5434	12472	31836	76134

STORAGE LOCATIONS FOR VARIABLES APPEARING IN COMMON STATEMENTS

	DEC	OCT		DEC	OCT		DEC	OCT		DEC	OCT
AI1	32361	77151	AI2	32336	77120	AI3	32311	77067	AI4	32161	76641
AI5	32336	76610	AJ1	32111	76457	AJ2	32086	76526	AJ3	32061	76475
AJ4	32211	76723	AK1	32186	76672	AR	32286	77036	BI	32561	77461
CH	32036	76444	DELY	32511	77377	DI	32536	77430	DISTI	32236	76754
DISTO	32261	77005	TAU	32386	77202	VBRW	32461	77315	XMACHS	32486	77346
XMC	32411	77233									

STORAGE LOCATIONS FOR VARIABLES APPEARING IN DIMENSION AND EQUIVALENCE STATEMENTS

	DEC	OCT		DEC	OCT		DEC	OCT		DEC	OCT
A2	5408	12440	A3	5333	12325	A4	5258	12212	AK2	5433	12471
AK3	5358	12356	AL1	5283	12243	AL2	5183	12077	BB1	5083	11733
BB2	5008	11620	BB3	4933	11505	BB4	4908	11454	C2	5233	12161
C3	5133	12015	C4	5033	11651	D1	5158	12046	D2	5058	11702
D3	4983	11567	D4	4958	11536	XLAO	5308	12274	XLHO	5383	12407
XMAO	5108	11764	XMHO	5208	12130						

STORAGE LOCATIONS FOR VARIABLES NOT APPEARING IN COMMON, DIMENSION, OR EQUIVALENCE STATEMENTS

	DEC	OCT		DEC	OCT		DEC	OCT		DEC	OCT
A01	4883	11423	A02	4882	11422	A11	4881	11421	A12	4880	11420
A13	4879	11417	A14	4878	11416	A15	4877	11415	A21	4876	11414
A22	4875	11413	A23	4874	11412	A24	4873	11411	A25	4872	11410
A26	4871	11407	A27	4870	11406	A31	4869	11405	A32	4868	11404
A33	4867	11403	A34	4866	11402	A35	4865	11401	A36	4864	11400
A37	4863	11377	A38	4862	11376	A39	4861	11375	ALONG	4860	11374
ARE	4859	11373	B2	4858	11372	B3	4857	11371	B4	4856	11370
B5	4855	11367	B6	4854	11366	B8	4853	11365	BETA2	4852	11364
BETA3	4851	11363	BETA4	4850	11362	BETA5	4849	11361	BETA	4848	11360
BR	4847	11357	B	4846	11356	CAPS	4845	11355	CAY	4844	11354

A E R O D Y N A M I C I N F L U E N C E C O E F F I C I E N T S 4/06/62

CBAR	4843	11353	COSL4	4842	11352	CT2	4841	11351	CT3	4840	11350
CT4	4839	11347	CT5	4838	11346	CT6	4837	11345	CT7	4836	11344
CT8	4835	11343	CTD1	4834	11342	CTD0	4833	11341	CT	4832	11340
DEEP	4831	11337	DISTI2	4830	11336	DISTI3	4829	11335	DISTI4	4828	11334
DISTI5	4827	11333	DISTI6	4826	11332	DISTI7	4825	11331	DISTI8	4824	11330
DISTO2	4823	11327	DISTO3	4822	11326	DISTO4	4821	11325	DISTO5	4820	11324
DISTO6	4819	11323	DISTO7	4818	11322	DISTO8	4817	11321	E1	4816	11320
E2	4815	11317	E3	4814	11316	EEE	4813	11315	EM2	4812	11314
EM	4811	11313	EN	4810	11312	E	4809	11311	EX	4808	11310
F1	4807	11307	F2	4806	11306	FF1	4805	11305	FF2	4804	11304
FF3	4803	11303	FF4	4802	11302	FF5	4801	11301	GAMA	4800	11300
I	4799	11277	ISTHK	4798	11276	ISTIP	4797	11275	ISTRIP	4796	11274
IXMC	4795	11273	JMACH	4794	11272	JTAU	4793	11271	JTWO	4792	11270
KGAMA	4791	11267	K	4790	11266	KVBRW	4789	11265	L	4788	11264
M	4787	11263	NCARDS	4786	11262	NOPUNJ	4785	11261	NTAPE2	4784	11260
NTAPE3	4783	11257	NTAPE7	4782	11256	Q1	4781	11255	Q2	4780	11254
Q3	4779	11253	Q4	4778	11252	Q5	4777	11251	R10	4776	11250
R11	4775	11247	R12	4774	11246	R13	4773	11245	R20	4772	11244
R21	4771	11243	R22	4770	11242	R23	4769	11241	R30	4768	11240
R31	4767	11237	R32	4766	11236	R33	4765	11235	R40	4764	11234
R41	4763	11233	R42	4762	11232	R43	4761	11231	R50	4760	11230
R51	4759	11227	R52	4758	11226	R53	4757	11225	RAT10	4756	11224
RAT11	4755	11223	RAT12	4754	11222	RAT13	4753	11221	RAT14	4752	11220
RAT15	4751	11217	RAT1	4750	11216	RAT2	4749	11215	RAT3	4748	11214
RAT4	4747	11213	RAT5	4746	11212	RAT6	4745	11211	RAT7	4744	11210
RAT8	4743	11207	RAT9	4742	11206	SAVE	4741	11205	SMS	4740	11204
TANL10	4739	11203	TANL11	4738	11202	TANL12	4737	11201	TANL13	4736	11200
TANL14	4735	11177	TANL15	4734	11176	TANL2	4733	11175	TANL3	4732	11174
TANL4	4731	11173	TANL5	4730	11172	TANL6	4729	11171	TANL7	4728	11170
TANL8	4727	11167	TANL9	4726	11166	TANLAM	4725	11165	TANLA	4724	11164
TAUK	4723	11163	WHY	4722	11162	XMC2	4721	11161	XMC3	4720	11160
XMC4	4719	11157	XMC5	4718	11156	XMC6	4717	11155	ZEE	4716	11154

SYMBOLS AND LOCATIONS FOR SOURCE PROGRAM FORMAT STATEMENTS

A E R O D Y N A M I C I N F L U E N C E C O E F F I C I E N T S 4/06/62

	EFN	LOC		EFN	LOC		EFN	LOC		EFN	LOC
8)1	1	[illegible]	8)2	2	11106	8)3	3	11104	8)4	4	11064
8)5	5	[illegible]	8)6	6	10745	8)7	7	10734	8)8	8	10715
8)9	9	[illegible]	8)A	10	10672	8)B	11	10661	8)C	12	10650
8)D	13	10612	8)E	14	10560	8)F	15	10546	8)G	16	10537
8)H	17	10531	8)I	18	10507	8)J	19	10477	8)K	20	10473

LOCATIONS FOR OTHER SYMBOLS NOT APPEARING IN SOURCE PROGRAM

	DEC	OCT		DEC	OCT		DEC	OCT		DEC	OCT
1)	4681	11111	1)1	4700	11134	2)	4348	10374	3)	4356	10404
4)	32767	77777	4)1	4701	11135	6)	4399	10457	7)	4707	11143
C)G0	4708	11144	C)G1	4709	11145	C)G2	4710	11146	C)G4	4711	11147
C)G5	4712	11150	C)G6	4713	11151	C)1G1	4714	11152	C)1G2	4715	11153
D)12D	4021	07665	D)12L	4269	10255	D)12P	4284	10274	D)21D	769	01401
D)21M	1379	02543	D)31D	768	01400	D)419	372	00564	D)429	3964	07574
D)42J	4245	10225	D)42R	4304	10320	D)52D	4020	07664	E)D	163	00243
E)1A	385	00601	E)1C	765	01375	E)1J	827	01473	E)1Q	1470	02676
E)1R	1475	02703	E)1V	1884	03534	E)21	2636	05114	E)28	3958	07566
E)21Q	1384	02550									

LOCATIONS OF NAMES IN TRANSFER VECTOR

	DEC	OCT		DEC	OCT		DEC	OCT		DEC	OCT
AEROP3	10	00012	ATAN	9	00011	EXP(3	8	00010	LOG	1	00001
RDLN	2	[illegible]	SQRT	7	[illegible]	(FIL)	6	00006	(FPT)	0	00000
(RTN)	4	[illegible]	(STH)	5	[illegible]	(TSH)	3	00003			

ENTRY POINTS TO SUBROUTINES NOT OUTPUT FROM LIBRARY

AEROP3	ATAN	EXP(3	LOG	RDLN	SQRT	(FIL)	(FPT)
(RTN)	(STH)	(TSH)					

NAMES AND LOCATIONS OF ARITHMETIC STATEMENT FUNCTIONS

A E R O D Y N A M I C I N F L U E N C E C O E F F I C I E N T S 4/06/62

	EFN	LOC		EFN	LOC		EFN	LOC		EFN	LOC
8)1	1	11114	8)2	2	11106	8)3	3	11104	8)4	4	11064
8)5	5	10795	8)6	6	10745	8)7	7	10734	8)8	8	10715
8)9	9	10703	8)A	10	10672	8)B	11	10661	8)C	12	10650
8)D	13	10612	8)E	14	10560	8)F	15	10546	8)G	16	10537
8)H	17	10531	8)I	18	10507	8)J	19	10477	8)K	20	10473

LOCATIONS FOR OTHER SYMBOLS NOT APPEARING IN SOURCE PROGRAM

	DEC	OCT		DEC	OCT		DEC	OCT		DEC	OCT
1)	4681	11111	1)1	4700	11134	2)	4348	10374	3)	4356	10404
4)	32767	77777	4)1	4701	11135	6)	4399	10457	7)	4707	11143
C)G0	4708	11144	C)G1	4709	11145	C)G2	4710	11146	C)G4	4711	11147
C)G5	4712	11150	C)G6	4713	11151	C)1G1	4714	11152	C)1G2	4715	11153
D)12D	4021	07665	D)12L	4269	10255	D)12P	4284	10274	D)21D	769	01401
D)21M	1379	02543	D)31D	768	01400	D)419	372	00564	D)429	3964	07574
D)42J	4245	10225	D)42R	4304	10320	D)52D	4020	07664	E)D	163	00243
E)1A	385	00601	E)1C	765	01375	E)1J	827	01473	E)1Q	1470	02676
E)1R	1475	02703	E)1V	1884	03534	E)21	2636	05114	E)28	3958	07566
E)21Q	1384	02550									

LOCATIONS OF NAMES IN TRANSFER VECTOR

	DEC	OCT		DEC	OCT		DEC	OCT		DEC	OCT
AEROP3	10	00012	ATAN	9	00011	EXP(3	8	00010	LOG	1	00001
RDLN	2	00002	SQRT	7	00007	(FIL)	6	00006	(FPT)	0	00000
(RTN)	4	00004	(STH)	5	00005	(TSH)	3	00003			

ENTRY POINTS TO SUBROUTINES NOT OUTPUT FROM LIBRARY

AEROP3	ATAN	EXP(3	LOG	RDLN	SQRT	(FIL)	(FPT)
(RTN)	(STH)	(TSH)					

NAMES AND LOCATIONS OF ARITHMETIC STATEMENT FUNCTIONS

	DEC	OCT		DEC	OCT		DEC	OCT		DEC	OCT
LOGE	4332	10354	SOME	4337	10361						

EXTERNAL FORMULA NUMBERS WITH CORRESPONDING INTERNAL FORMULA NUMBERS AND OCTAL LOCATIONS

EFN	IFN	LOC	EFN	IFN	LOC	EFN	IFN	LOC	EFN	IFN	LOC
50	32	00032	51	69	00236	52	72	00244	53	74	00250
54	86	00312	55	91	00331	56	95	00354	57	96	00361
58	102	00430	59	106	00437	60	110	00446	61	113	00454
64	147	00602	66	148	00606	67	170	01372	68	171	01402
70	184	01474	71	187	01507	72	234	02534	73	237	02551
74	243	02564	75	253	02677	76	254	02705	77	255	02707
78	279	03030	79	280	03032	80	288	03537	81	295	04123
82	311	05117	83	346	05364	84	354	06313	85	362	07142
86	374	07475	88	376	07505	89	377	07511	90	391	07563
91	392	07570	92	395	07607	93	397	07616	94	398	07624
97	403	07671	98	413	07717	99	423	10022	100	430	10177
101	435	10226	102	438	10250	103	445	10275	104	447	10321
105	449	10344	106	450	10350						

```
                                                                    4/06/62
      SUBROUTINE  RDLN  (NTAPE2, NTAPE3, I )                        HM100554
    1 FORMAT(80H                                                    HM100555
                                                                    [illegible]
                                                                    [illegible]
                                                                    [illegible]
                                                                    HM100559
      READ INPUT TAPE NTAPE2, 1                                     HM100560
      GOTO   (4,5),I                                                HM100561
                                                                    [illegible]
                                                                    [illegible]
                                                                    [illegible]
                                                                    HM100565
    5 WRITE OUTPUT TAPE NTAPE3, 3                                   HM100566
                                                                    HM100567
                                                                    [illegible]
                                                                    [illegible]
                                                                    [illegible]
      END(1,0,0,0,0,0,0,0,0,1,0,0,0,0,0)
```

STORAGE NOT USED BY PROGRAM

DEC	OCT	DEC	OCT
76	00114	32561	77461

SYMBOLS AND LOCATIONS FOR SOURCE PROGRAM FORMAT STATEMENTS

	EFN	LOC		EFN	LOC		EFN	LOC		EFN	LOC
811	1	00112	812	2	00073	813	3	00072			

LOCATIONS FOR OTHER SYMBOLS NOT APPEARING IN SOURCE PROGRAM

	DEC	OCT		DEC	OCT		DEC	OCT		DEC	OCT
61	52	00064	C1GO	-75	00113	E11	28	00034			

LOCATIONS OF NAMES IN TRANSFER VECTOR

	DEC	OCT		DEC	OCT		DEC	OCT		DEC	OCT
(FIL)	3	00003	(RTN)	1	00001	(STH)	2	00002	(TSH)	0	00000

ENTRY POINTS TO SUBROUTINES NOT OUTPUT FROM LIBRARY

(FIL) (RTN) (STH) (TSH)

EXTERNAL FORMULA NUMBERS WITH CORRESPONDING INTERNAL FORMULA NUMBERS AND OCTAL LOCATIONS

EFN	IFN	LOC	EFN	IFN	LOC	EFN	IFN	LOC	EFN	IFN	LOC
4	8	00035	5	10	00044	6	11	00052			

```
      SUBROUTINE AEROP3 (VBRW,XMACH,CH,ISTRIP,NSTART,NTAPE3,NTAPE7)      HM100572
      DIMENSION   CH(2,4,25),  A(22)                                    HM100573
                                                                        HM100574
    1 FORMAT  ( 2E12.8,  48X,  4HHM10   1I4 )                           HM100575
    2 FORMAT  (1H0  40X, 24H PUNCHED CARDS NOS. HM10   1I4,             HM100576
     1          10H THRU HM10   1I4  )                                  HM100577
    3 FORMAT  (2I4,   64X,  4HHM10   1I4 )                              HM100578
                                                                        HM100579
                                                                        HM100580
    8 BCDZ =6030440100060                                               HM100581
      IORG=1                                                            HM100582
      IS=NSTART                                                         HM100583
      NITS=1                                                            HM100584
      IF (VBRW)        4,4,5                                            HM100585
    4 NITS=2                                                            HM100586
    5 WRITE OUTPUT TAPE NTAPE7,  1, VBRW,XMACH,IS                       HM100587
      IS=IS+1                                                           HM100588
      K=2*ISTRIP                                                        HM100589
      WRITE OUTPUT TAPE NTAPE7,  3, K,ISTRIP,IS                         HM100590
      IS=IS+1                                                           HM100591
      NUTS=4                                                            HM100592
      DO  6  I=1,22                                                     HM100593
    6   A(I)=0.                                                         HM100594
      M=0                                                               HM100595
      DO  11  I=1,ISTRIP                                                HM100596
        DO 10   L=1,NUTS,NITS                                           HM100597
          DO  9   J=1,2                                                 HM100598
            M=M+1                                                       HM100599
            IF (M-23)     9,7,7                                         HM100600
    7       M=M-22                                                      HM100601
            CALL BINPU (A,22,IORG,BCDZ,IS,NTAPE7)                       HM100602
            IORG=IORG+22                                                HM100603
            IS=IS+1                                                     HM100604
            DO  8  M=1,22                                               HM100605
    8         A(M)=0.                                                   HM100606
            IF  (M-23)      9,7,7                                       HM100607
    9       A(M)=CH(J,L,I)                                              HM100608
        ICONFZ=I+J+L                                                    HM100609
   10 M=M+K-2
```

```
   11 M=M+2                                                          HM100610
      M=M-K                                                          HM100611
      IF ( M )    13,13,12                                           HM100612
   12 CALL BINPU  (A,M,IORG,BCDZ,IS,NTAPE7)                          HM100613
      IS=IS+1                                                        HM100614
   13 CALL BINPU  (A,0,0,BCDZ,IS,NTAPE7)                             HM100615
      WRITE OUTPUT TAPE NTAPE3, 2, NSTART,IS                         HM100616
      NSTART=IS+1                                                    HM100617
      RETURN                                                         HM100618
      END(1,0,0,0,0,0,0,0,0,1,0,0,0,0,0)
```

STORAGE NOT USED BY PROGRAM

DEC	OCT	DEC	OCT
319	00477	32561	77461

STORAGE LOCATIONS FOR VARIABLES APPEARING IN DIMENSION AND EQUIVALENCE STATEMENTS

	DEC	OCT	DEC	OCT	DEC	OCT	DEC	OCT
A	318	00476						

STORAGE LOCATIONS FOR VARIABLES NOT APPEARING IN COMMON, DIMENSION, OR EQUIVALENCE STATEMENTS

	DEC	OCT		DEC	OCT		DEC	OCT		DEC	OCT
BCD2	296	00450	ICONFZ	295	00447	IORG	294	00446	I	293	00445
IS	292	00444	J	291	00443	K	290	00442	L	289	00441
M	288	00440	NITS	287	00437	NUTS	286	00436			

SYMBOLS AND LOCATIONS FOR SOURCE PROGRAM FORMAT STATEMENTS

	EFN	LOC		EFN	LOC		EFN	LOC		EFN	LOC
811	1	00427	812	2	00421	813	3	00401			

LOCATIONS FOR OTHER SYMBOLS NOT APPEARING IN SOURCE PROGRAM

	DEC	OCT		DEC	OCT		DEC	OCT		DEC	OCT
1)	281	00431	2)	240	00360	3)	246	00366	6)	248	00370
9)	280	00430	C)C2	283	00433	C)200	284	00434	C)201	285	00435
D1407	124	00174									

LOCATIONS OF NAMES IN TRANSFER VECTOR

	DEC	OCT		DEC	OCT		DEC	OCT		DEC	OCT
BINPU	2	00002	IFILI	1	00001	ISTHI	0	00000			

ENTRY POINTS TO SUBROUTINES NOT OUTPUT FROM LIBRARY

BINPU (FIL) (STH)

[redacted] INTERNAL FORMULA NUMBERS AND DETAIL LOCATIONS

EFN	IFN	LOC	EFN	IFN	LOC	EFN	IFN	LOC	EFN	IFN	LOC
4	12	00055	5	13	00057	6	22	00120	7	29	00207
8	35	00232	9	37	00242	10	39	00253	11	40	00271
[redacted]			[redacted]								

```
BINPU ROUTINE TO WRITE COL BIN CARDS ON TAPE. FIBII                    4/06/62      PAGE 1

                    ***********************************************************************HM100623
                    *                                                                      HM100624
                    * CALLING SEQUENCE                                                     HM100625
                    *       TSX     BINPU,4                                                HM100626
                    *       TSX     LOC (ARRAY TO BE PUNCHED)                              HM100627
                    *       TSX     LOC (NO. WORDS TO PUNCH)                               HM100628
                    *       TSX     LOC (CARD ORIGIN FOR 1ST CARD)                         HM100629
                    *      *TSX     LOC (SEQ NO. OF 1ST CARD)                              HM100630
                    *      *TSX     LOC (BCD ID FOR THIS DECK, 1ST AND 2ND CHARACTER BLANKS) HM100631
                    *       TSX     LOC (OUTPUT TAPE NUMBER)                               HM100632
                    *****CONTRARY TO BELOW, NO ITEMS MAY BE OMITTED IN THIS MODIFICATION.  HM100633
                    *                                                                      HM100634
                    * ITEMS MARKED (*) MAY BE DELETED. BCD ID WILL BE                      HM100635
                    *       UNCHANGED AND SEQ. NOS. WILL BE CONTINUOUS STARTING            HM100636
                    *       FROM  000. ALSO ORDER MAY BE SWITCHED.                         HM100637
                    *                                                                      HM100638
                    * THIS VERSION PUNCHES OFF-LINE ONLY.                                  HM100639
                    *                                                                      HM100640
                    ***********************************************************************HM100641
          00006           ENTRY   BINPU                                                    HM100642
                    *                                                                      HM100643

 TRANSFER VECTOR
00000  743146623460     (IOS)
00001  746651623460     (WRS)
00002  745123303460     (RCH)
00003  746663233460     (WTC)
00004  746625513460     (WER)
00005  746325623460     (TES)

00006  0634 00 1 00142  BINPU SXA     X1,1                                                 HM100644
00007  0634 00 2 00143        SXA     X2,2                                                 HM100645
00010 -0500 60 4 00006        CAL*    6,4                                                  HM100646
00011  0622 00 0 00331        STD     14D                                                  HM100647
00012  0500 60 4 00001        CLA     1,4                 LOC OF ARRAY                     HM100648
00013  0621 00 0 00062        STA     ARRAY                                                HM100649
00014 -0500 60 4 00002        CAL*    2,4                 WORD COUNT                       HM100650
00015  0602 00 0 77776        SLW     END                 END=0 IF TRANSFER CARD           HM100651
```

```
00016  0402 00 0 00325          SUB     D1                                                  HM100652
00017  0622 00 0 00066          STD     LOCN                                                HM100653
00020  0634 00 0 00061          SXA     COUNT,0                                             HM100654
00021  0500 60 4 00003          CLA*    3,4                 SET UP CONTROL WORD             HM100655
00022  0771 00 0 00022          ANS     18                                                  HM100656
00023 -0120 00 0 00025          TMI     *+2                                                 HM100657
00024 -0501 00 0 00266          ORA     REL                 ADD RELATIVE BIT                HM100658
00025 -0501 00 0 00334          ORA     IMAGE               7-9, WORD COUNT=22              HM100659
00026  0602 00 0 77740          SLW     CIMAGE              CONTROL WORD ESTABLISHED.       HM100660
                        ***********************************************************************HM100661
                        *       TEST FOR FOURTH AND-OR FIFTH ARGUMENTS.                     HM100662
                        *       DETERMINE WHETHER ARGUMENT REFERS TO ID OR SEQ NUMBER       HM100663
                        *       AND SET CELLS FROM CALLING SEQUENCE.                        HM100664
                        ***********************************************************************HM100665
                                                                                            HM100666
00027  0774 00 2 00002          AXT     2,2                                                 HM100667
00030 -0625 00 0 00302          STL     BLSEQ               SET BLSEQ TO ITS NORMAL STATE   HM100668
00031 -0500 00 4 00004   G4     CAL     4,4                 TEST FOR 4TH, 5TH ARGS          HM100669
00032 -0320 00 0 00265          ANA     MSKPDT                                              HM100670
00033  0322 00 0 00307          ERA     MSKTSX                                              HM100671
00034 -0100 00 0 00054          TNZ     G2                  NO MORE TSXES                   HM100672
00035  0500 60 4 00004          CLA*    4,4                                                 HM100673
00036 -0340 00 0 00262          LAS     BCIB                                                HM100674
00037  0020 00 0 00051          TRA     G3                  BIG, THIS IS ID                 HM100675
00040  0600 00 0 00302          STZ     BLSEQ               EQUAL, FLAG BLANK SEQ. NO.      HM100676
00041 -0100 00 0 00043          TNZ     *+2                 IS SEQ NO NON-ZERO.             HM100677
00042 -0754 00 0 00000          PXD                         NO                              HM100678
00043 -0130 00 0 00000          XCL                         SMALL, THIS IS SEQ NO.          HM100679
00044  0634 00 4 00046          SXA     *+2,4                                               HM100680
00045  0074 00 4 00172          TSX     COSEQ,4             CONVERT SEQ NO TO BCD           HM100681
00046  0774 00 4 00000          AXT     **,4                                                HM100682
00047  0602 00 0 00267          SLW     SEQNO               SAVE                            HM100683
00050  1 77777 4 00053          TXI     G5,4,-1                                             HM100684
00051  0601 00 0 00305   G3     STO     BCD10                                               HM100685
00052  1 77777 4 00053          TXI     G5,4,-1             MOVE TO NEXT ARGUMENT           HM100686
00053  2 00001 2 00031   G5     TIX     G4,2,1              AT MOST 2 EXTRA ARGS.           HM100687
00054  0634 00 4 00144   G2     SXA     X4,4                                                HM100688
00055 -0520 00 0 77776          NZT     END                 IS WORD COUNT ZERO              HM100689
00056  0020 00 0 00152          TRA     TRCD                MUST BE A TRANSFER CARD
```

```
                                *                                                                    HM100690
                                ************************************************************************HM100691
                                *       BUILD THE CARD IMAGE.                                        HM100692
                                ************************************************************************HM100693
                                *                                                                    HM100694
00057  0774 00 2 00026  NEXT    AXT     22,2                                                         HM100695
00060 -0754 00 0 00000          PXD                          CLEAR AC FOR CHECKSUM.                  HM100696
00061  0774 00 4 00000  COUNT   AXT     **,4                                                         HM100697
00062  0560 00 4 00000  ARRAY   LDQ     **,4                 MOVE ARRAY INTO CORE.                   HM100698
00063 -0600 00 2 77770          STQ     CIMAGE+24,2                                                  HM100699
00064  0361 00 2 77770          ACL     CIMAGE+24,2          ACCUMULATE CHECKSUM FOR BODY.           HM100700
00065  1 00001 4 00066          TXI     *+1,4,1                                                      HM100701
00066  3 00000 4 00160  LOCN    TXH     OUT,4,**             FINISH WHEN SPECIFIED                   HM100702
00067  2 00001 2 00062          TIX     ARRAY,2,1            BY NO. WORDS DESIRED.(2,4)              HM100703
00070  0634 00 4 00061  IN      SXA     COUNT,4              SET COUNT FOR NEXT LOOP.                HM100704
00071  0361 00 0 77740          ACL     CIMAGE               ADD IN CONTROL WORD.                    HM100705
00072  0602 00 0 77741          SLW     CIMAGE+1             PUT CHECKSUM IN IMAGE.                  HM100706
                                *                                                                    HM100707
                                ************************************************************************HM100708
                                *       EDIT THE IDENTIFICATION FIELD.                               HM100709
                                ************************************************************************HM100710
                                *                                                                    HM100711
00073 -0500 00 0 00267  EDIT    CAL     SEQNO                                                        HM100712
00074  0560 00 0 00327          LDQ     L(1)                                                         HM100713
00075 -0765 00 0 00022          LGR     18                                                           HM100714
00076 -0500 00 0 00305          CAL     BCDID                                                        HM100715
00077 -0763 00 0 00006          LGL     6                                                            HM100716
00100 -0600 00 0 00326          STQ     IDLCO            SAVE FOR FINISHING.                         HM100717
00101 -0130 00 0 00000          XCL                                                                  HM100718
00102  0634 00 1 00120          SXA     SVI,1                                                        HM100719
00103  0774 00 2 00004          AXT     4,2                                                          HM100720
00104  0774 00 4 00002          AXT     2,4                                                          HM100721
00105 -0774 00 1 00003  ABC     AXT     3,1                                                          HM100722
00106 -0754 00 0 00000          PXD                                                                  HM100723
00107 -0114 01 0 00230          CAQ     TAB,,1                                                       HM100724
00110 -2 00001 1 00113          TNX     *+3,1,1                                                      HM100725
00111  0767 00 0 00014          ALS     12                                                           HM100726
00112  0020 00 0 00107          TRA     *-3                                                          HM100727
```

```
00113  0602 00 2 77734          SLW     LAST+4,2        COL BIN AT LAST TO LAST+3          HM100728
00114  1 77777 2 00115          TXI     *+1,2,-1                                           HM100729
00115  2 00001 4 00105          TIX     ABC,4,1                                            HM100730
00116  0560 00 0 00326          LDQ     IOLCD           FINISH W/SAVED C(MQ).              HM100731
00117  3 00000 2 00104          TRN     ABC-1,2,0                                          HM100732
00120  0774 00 1 00000  SV1     AXT     **,1                                               HM100733
                        *                                                                  HM100734
                        ***********************************************************************HM100735
                        *       THE ENTIRE CARD IMAGE IS BUILT, WITH THE BODY              HM100736
                        *       AT CIMAGE THRU CIMAGE+23. AND ID AT LAST THRU LAST+3.      HM100737
                        *       NOW  ***** WRITE THE CARD ON TAPE. ********                HM100738
                        ***********************************************************************HM100739
                                                                                           HM100740
00121  0761 00 0 00000  WRITE   NOP                                                        HM100741
00122 -0500 00 0 00331  WRITE1  CAL     14D                                                HM100742
00123  0074 00 4 00000          CALL    (IOS)           ESTABLISH I/O FOR TAPE 14.         HM100743
00124  0522 60 0 00001          XEC*    $(WRS)                                             HM100744
00125 -0774 00 4 00213          ABC     PUNCMD,4                                           HM100745
00126  0522 60 0 00002          XEC*    $(RCH)                                             HM100746
00127  0754 00 4 00000          PXA     0,4             SET (WER) FOR RETRY.               HM100747
00130  0621 60 0 00003          STA*    $(WTC)                                             HM100748
00131  0074 00 4 00004  BPTES   TSX     $(WER),4                                           HM100749
00132 -0500 00 0 00263          CAL     SEQNO                                              HM100750
00133  0400 00 0 00327          ADD     L111            INCREMENT CARD COUNT.              HM100751
00134  0114 06 0 00215          CVR     TB1,,6                                             HM100752
00135  0602 00 0 00267          SLW     SEQNO                                              HM100753
00136  0520 00 0 77776          ZET     END             TEST IF LAST CARD.                 HM100754
00137  0020 00 0 00146          TRA     SWTCH               NOT THE LAST CARD....          HM100755
00140 -0500 00 0 00131          CAL     BPTES                                              HM100756
00141  0602 60 0 00005          SLW*    $(TRS)                                             HM100757
00142  0774 00 1 00000  X1      AXT     **,1                ALL DONE. EXIT                 HM100758
00143  0774 00 2 00000  X2      AXT     **,2                                               HM100759
00144  0774 00 4 00000  X4      AXT     **,4                                               HM100760
00145  0020 00 4 00005          TRA     5,4                                                HM100761
                        *                                                                  HM100762
                        ***********************************************************************HM100763
00146 -0500 00 0 77740  SWTCH   CAL     CIMAGE              UPDATE THE CARD ORIGIN.        HM100764
00147  0361 00 0 00333          ACL     A22                                                HM100765
00150  0602 00 0 77740          SLW     CIMAGE
```

```
00151  0020 00 0 00057          TRA     NEXT                                                    HM100766
                       ***********************************************************************HM100767
                       *                                                                       HM100768
00152  -0774 00 2 00027  TRCB   AXT     23,2                 CLEAR REST OF                      HM100769
00153  0400 00 2 77770          STZ     CIMAGE+24,2          CARD IMAGE.                        HM100770
00154  2 00001 2 00153          TIX     *-1,2,1                                                 HM100771
00155  0500 00 0 00322          CLA     ZWC                  STORE ZERO WORD COUNT              HM100772
00156  0622 00 0 77740          STD     CIMAGE                                                  HM100773
00157  0020 00 0 00073          TRA     EDIT                                                    HM100774
                       *                                                                       HM100775
                       ***********************************************************************HM100776
                       *                                                                       HM100777
00160  0600 00 0 77776  OUT    STZ     END                  WORD COUNT EXHAUSTED               HM100778
00161  -2 00001 2 00070        TNX     IN,2,1               RETURN IF CARD IS FULL             HM100779
00162  0602 00 0 77777          SLW     COMMON               SAVE CHECKSUM.                     HM100780
00163  -0754 00 2 00000         PXD     0,2                  CORRECT WORD COUNT                 HM100781
00164  0402 00 0 77740          SUB     CIMAGE                                                  HM100782
00165  0622 00 0 77740          STD     CIMAGE                                                  HM100783
00166  -0500 00 0 77777         CAL     COMMON               RETURN CHECKSUM.                   HM100784
00167  -3 00000 2 00070         TXL     IN,2,0                                                  HM100785
00170  0400 00 2 77770          STZ     CIMAGE+24,2          CLEAR REST OF CARD.                HM100786
00171  1 77777 2 00167          TXI     *-2,2,-1                                                HM100787
                       *                                                                       HM100788
                       ***********************************************************************HM100789
                       * THIS ROUTINE CONVERTS A BINARY INTEGER TO BCD. (4 DIGITS DECR-MQ)     HM100790
                       ***********************************************************************HM100791
                       *                                                                       HM100792
00172  -0754 00 0 00000  COSEQ  PXD                                                            HM100793
00173  -0520 00 0 00302          NZT     BLSEQ                TEST IF BLANKS DESIRED.            HM100794
00174  0020 00 0 00211          TRA     COSEQX                                                  HM100795
00175  0765 00 0 00022          LRS     18                   RIGHT ADJUST BIN INTEGER           HM100796
00176  0221 00 0 00332          DVP     TEN                                                     HM100797
00177  -0601 00 0 77777         STO     COMMON                                                  HM100798
00200  -0754 00 0 00000         PXD                                                             HM100799
00201  0221 00 0 00332          DVP     TEN                                                     HM100800
00202  0767 00 0 00006          ALS     6                                                       HM100801
00203  -0602 00 0 77777         ORS     COMMON                                                  HM100802
00204  -0754 00 0 00000         PXD                                                             HM100803
```

```
00205  0221 00 0 00332          DVP     TEN                                                  HM100804
00206  0767 00 0 00014          ALS     12                                                   HM100805
[illegible]                     ORA     COMMON          RIGHT ADJUSTED SEQ NO.               HM100806
[illegible]                     TRA     1,4                                                  HM100807
[illegible]                COSCOM CAL     BLANK           BLANK OUT SEQ. NO.                   HM100808
00212  0020 00 4 00001          TRA     1,4                                                  HM100809
                           *                                                                 HM100810
                           ***********************************************************************HM100811
                           *                                                                 HM100812
00213 -0 00030 0 77740     PUNCHN IOCP    CIMAGE,0,24                                          HM100813
00214  0 00003 0 77730          IOCD    LAST,0,3                                             HM100814
                           *                                                                 HM100815
                           * TABLE FOR BCD ADDITION OF 1 TO C(ACC)                           HM100816
                           *                                                                 HM100817
00215  0000 00 0 00215     TB1  HTR     TB1                 0                                HM100818
00216  0100 00 0 00215     TB   TZE     TB1                 1                                HM100819
00217  0200 00 0 00215          NPY     TB1                 2                                HM100820
00220  0300 00 0 00215          FAD     TB1                 3                                HM100821
00221  0400 00 0 00215          ADD     TB1                 4                                HM100822
00222  0500 00 0 00215          CLA     TB1                 5                                HM100823
00223  0600 00 0 00215          STZ     TB1                 6                                HM100824
00224  0700 00 0 00215          CPY     TB1                 7                                HM100825
00225  1 00000 0 00215          TXI     TB1                 8                                HM100826
00226  1 10000 0 00215          TXI     TB1,0,4096          9                                HM100827
00227  0000 00 0 00216          HTR     TB                  0 WITH CARRY                     HM100828
                           * TABLES FOR BCD-COL. BIN. CONVERSION                             HM100829
                           * HOLES ARE FILLED IN WITH CONSTANTS                              HM100830
00230 +000000001000        TAB  OCT     1000,400,200,100,40,20,10,4,2,1                      HM100831
00231 +000000000400
00232 +000000000200
00233 +000000000100
00234 +000000000040
00235 +000000000020
00236 +000000000010
00237 +000000000004
00240 +000000000002
00241 +000000000001
00242 -377777770000        MSK2CH OCT     777777770000,102,42                                HM100832
```

```
00243 +000000000102
00244 +000000000042
00245 +000000000000      ID123 OCT     0,0,0                                                  HM100833
00246 +000000000000
00247 +000000000000
00250 +000000004000            OCT     4000,4400,4200,4100,4040,4020,4010,4004,4002,4001      HM100834
00251 +000000004400
00252 +000000004200
00253 +000000004100
00254 +000000004040
00255 +000000004020
00256 +000000004010
00257 +000000004004
00260 +000000004002
00261 +000000004001
00262  106060606060      BCI8  BCI     1,8                                                    HM100835
00263 +000000004102            OCT     4102,4042                                              HM100836
00264 +000000004042
00265 -3 77777 7 00000  MSKPUT TXL     0,7,-1                                                 HM100837
00266  0400 00 0 00000   REL   ADD                                                            HM100838
00267  606060606060      SEQNO BCI     1,                                                     HM100839
00270 +000000002000            OCT     2000,2400,2200,2100,2040,2020,2010,2004,2002,2001      HM100840
00271 +000000002400
00272 +000000002200
00273 +000000002100
00274 +000000002040
00275 +000000002020
00276 +000000002010
00277 +000000002004
00300 +000000002002
00301 +000000002001
00302  0 00000 0 00000   BLSEQ                                                                HM100841
00303 +000000002102            OCT     2102,2042                                              HM100842
00304 +000000002042
00305  606060606060      BCDID BCI     1,                                                     HM100843
00306  606060606060      BLANK BCI     1,                                                     HM100844
00307  0074 00 0 00000  MSKTSX TSX     ,0                                                     HM100845
00310 +000000000000            OCT     0,1400,1200,1100,1040,1020,1010,1004,1002,1001         HM100846
```

```
00311 +000000001400
00312 +000000001200
00316 +000000001010
00317 +000000001004
00320 +000000001002
00324 +000000001042                                                                  HM100849
00325  0 00001 0 00000   D1          0,0,1                                            HM100850
00326  0 00000 0 00000  IDLCD  PZE
00332 +000000000012     TEN    DEC   10                                               HM100854
00333  0000 00 0 00026   A22   HTR   22                                               HM100855
00334 +000526000000      IMAGE OCT   000526000000      CONTROL WORD SKELETON          HM100856
                 77776   END   SYN   COMMON-1                                         HM100861
                                END
```

[illegible] TO WRITE COR BIN CARDS ON TAPE. FIB11 4/06/62

POST PROCESSOR ASSEMBLY DATA

335 IS THE FIRST LOCATION NOT USED BY THIS PROGRAM

[illegible] SYMBOLS

330	5A	
325	D1	16
54	G2	34
[illegible]	[illegible]	[illegible]
[illegible]	[illegible]	[illegible]
[illegible]	[illegible]	[illegible]
70	IN	161, 167
216	TB	227
142	X1	6
[illegible]	[illegible]	[illegible]
[illegible]	[illegible]	[illegible]
[illegible]	[illegible]	[illegible]
333	A22	147
105	ABC	115, 117
77776	END	15, 55, 136, 160
[illegible]	[illegible]	[illegible]
[illegible]	[illegible]	[illegible]
[illegible]	[illegible]	[illegible]
230	TAB	107
215	TB1	134, 215, 216, 217, 220, 221, 222, 223, 224, 225, 226
332	TEN	176, 201, 205
[illegible]	[illegible]	[illegible]
[illegible]	[illegible]	[illegible]
[illegible]	[illegible]	[illegible]
77730	LAST	113, 214
66	LOCN	17
327	L(1)	74, 133
[illegible]	[illegible]	[illegible]
[illegible]	[illegible]	[illegible]
[illegible]	[illegible]	[illegible]
305	BCDID	51, 76
6	BINPU	0
306	BLANK	211
[illegible]	[illegible]	[illegible]

```
[illegible] ROUTINE TO WRITE COL BIN CARDS ON TAPE. FIBII                    4/06/62
                    POST PROCESSOR ASSEMBLY DATA

   131  BPTES    140
   [illegible]  [illegible]  [illegible]
   [illegible]  [illegible]  [illegible]  [illegible]
   [illegible]  [illegible]
   326  IDLCD    100,  116
   334  IMAGE     25
   267  SEQNO     47,   73,  132,  135
   [illegible]  [illegible]  [illegible]
   [illegible]  [illegible]
     0  (IOS)    123
     2  (RCH)    126
     5  (TES)    141
     4  (WER)    131
     1  (WRS)    [illegible]
     3  (WTC)    130
 77[illegible] CIMAGE   26,   63,   64,   71,   72,  146,  150,  153,  156,  164,  165,  170,  213
 77777 COMMON    162,  166,  177,  203,  207,  335
   211  COSEQX    174
   242  MSK2CH
   [illegible]  [illegible]  32
   [illegible]  [illegible]  [illegible]
   [illegible]  [illegible]  [illegible]
   122  WRITE1

NO ERROR IN ABOVE ASSEMBLY.
```

UNCLASSIFIED

Aerospace Corporation, El Segundo, California. AERODYNAMIC INFLUENCE COEFFICIENTS FROM SUPERSONIC STRIP THEORY: ANALYTICAL DEVELOPMENT AND COMPUTATIONAL PROCEDURE, prepared by W. P. Rodden, E. F. Farkas, H. A. Malcom, and A. M. Kliszewski. 1 August 1962. [47]p. incl. illus, tables. (Report TDR-169(3230-11)TN-1; SSD-TDR-62-74) (Contract AF 04(695)-169) Unclassified report

In this report, we review a method for computing the aerodynamic influence coefficients (AICs) for surfaces with supersonic leading edges. The method is based on the two-dimensional second-order potential solution of Van Dyke. The strip oscillatory coefficients are obtained from the extension of Van Dyke's work by Rodden and Revell to include the effects of sweep and finite span in addition to the effects of thickness, leading to a method that will avoid the unconservatism

(over)

UNCLASSIFIED

UNCLASSIFIED

Aerospace Corporation, El Segundo, California. AERODYNAMIC INFLUENCE COEFFICIENTS FROM SUPERSONIC STRIP THEORY: ANALYTICAL DEVELOPMENT AND COMPUTATIONAL PROCEDURE, prepared by W. P. Rodden, E. F. Farkas, H. A. Malcom, and A. M. Kliszewski. 1 August 1962. [47]p. incl. illus, tables. (Report TDR-169(3230-11)TN-1; SSD-TDR-62-74) (Contract AF 04(695)-169) Unclassified report

In this report, we review a method for computing the aerodynamic influence coefficients (AICs) for surfaces with supersonic leading edges. The method is based on the two-dimensional second-order potential solution of Van Dyke. The strip oscillatory coefficients are obtained from the extension of Van Dyke's work by Rodden and Revell to include the effects of sweep and finite span in addition to the effects of thickness, leading to a method that will avoid the unconservatism

(over)

UNCLASSIFIED

UNCLASSIFIED

Aerospace Corporation, El Segundo, California. AERODYNAMIC INFLUENCE COEFFICIENTS FROM SUPERSONIC STRIP THEORY: ANALYTICAL DEVELOPMENT AND COMPUTATIONAL PROCEDURE, prepared by W. P. Rodden, E. F. Farkas, H. A. Malcom, and A. M. Kliszewski. 1 August 1962. [47]p. incl. illus, tables. (Report TDR-169(3230-11)TN-1; SSD-TDR-62-74) (Contract AF 04(695)-169) Unclassified report

In this report, we review a method for computing the aerodynamic influence coefficients (AICs) for surfaces with supersonic leading edges. The method is based on the two-dimensional second-order potential solution of Van Dyke. The strip oscillatory coefficients are obtained from the extension of Van Dyke's work by Rodden and Revell to include the effects of sweep and finite span in addition to the effects of thickness, leading to a method that will avoid the unconservatism

(over)

UNCLASSIFIED

UNCLASSIFIED

Aerospace Corporation, El Segundo, California. AERODYNAMIC INFLUENCE COEFFICIENTS FROM SUPERSONIC STRIP THEORY: ANALYTICAL DEVELOPMENT AND COMPUTATIONAL PROCEDURE, prepared by W. P. Rodden, E. F. Farkas, H. A. Malcom, and A. M. Kliszewski. 1 August 1962. [47]p. incl. illus, tables. (Report TDR-169(3230-11)TN-1; SSD-TDR-62-74) (Contract AF 04(695)-169) Unclassified report

In this report, we review a method for computing the aerodynamic influence coefficients (AICs) for surfaces with supersonic leading edges. The method is based on the two-dimensional second-order potential solution of Van Dyke. The strip oscillatory coefficients are obtained from the extension of Van Dyke's work by Rodden and Revell to include the effects of sweep and finite span in addition to the effects of thickness, leading to a method that will avoid the unconservatism

(over)

UNCLASSIFIED

UNCLASSIFIED

of linearized theory and will be applicable at Mach numbers below the lower Mach number limit of piston theory. The influence coefficients relate the aerodynamic forces to the surface deflections through the following definitions. In the oscillatory case, $\{F\} = \rho\omega^2 b_r^2 s\,[C_h]\,\{h\}$, and in the steady case, $\{F_s\} = (1/2)\,\rho V^2 (S/\bar{c})\,[C_{hs}]\,\{h\}$. The Aerospace IBM 7090 Computer Program No. HM10 provides the AICs in printed and optional punched-card output formats. The theoretical formulation is limited to Mach numbers normal to the leading edge greater than 1.25. The program capacity is 25 surface strips, 25 values of Mach number, and 50 values of reduced velocity.

UNCLASSIFIED

UNCLASSIFIED

of linearized theory and will be applicable at Mach numbers below the lower Mach number limit of piston theory. The influence coefficients relate the aerodynamic forces to the surface deflections through the following definitions. In the oscillatory case, $\{F\} = \rho\omega^2 b_r^2 s\,[C_h]\,\{h\}$, and in the steady case, $\{F_s\} = (1/2)\,\rho V^2 (S/\bar{c})\,[C_{hs}]\,\{h\}$. The Aerospace IBM 7090 Computer Program No. HM10 provides the AICs in printed and optional punched-card output formats. The theoretical formulation is limited to Mach numbers normal to the leading edge greater than 1.25. The program capacity is 25 surface strips, 25 values of Mach number, and 50 values of reduced velocity.

UNCLASSIFIED

UNCLASSIFIED

of linearized theory and will be applicable at Mach numbers below the lower Mach number limit of piston theory. The influence coefficients relate the aerodynamic forces to the surface deflections through the following definitions. In the oscillatory case, $\{F\} = \rho\omega^2 b_r^2 s\,[C_h]\,\{h\}$, and in the steady case, $\{F_s\} = (1/2)\,\rho V^2 (S/\bar{c})\,[C_{hs}]\,\{h\}$. The Aerospace IBM 7090 Computer Program No. HM10 provides the AICs in printed and optional punched-card output formats. The theoretical formulation is limited to Mach numbers normal to the leading edge greater than 1.25. The program capacity is 25 surface strips, 25 values of Mach number, and 50 values of reduced velocity.

UNCLASSIFIED

UNCLASSIFIED

of linearized theory and will be applicable at Mach numbers below the lower Mach number limit of piston theory. The influence coefficients relate the aerodynamic forces to the surface deflections through the following definitions. In the oscillatory case, $\{F\} = \rho\omega^2 b_r^2 s\,[C_h]\,\{h\}$, and in the steady case, $\{F_s\} = (1/2)\,\rho V^2 (S/\bar{c})\,[C_{hs}]\,\{h\}$. The Aerospace IBM 7090 Computer Program No. HM10 provides the AICs in printed and optional punched-card output formats. The theoretical formulation is limited to Mach numbers normal to the leading edge greater than 1.25. The program capacity is 25 surface strips, 25 values of Mach number, and 50 values of reduced velocity.

UNCLASSIFIED

UNCLASSIFIED

Aerospace Corporation, El Segundo, California. AERODYNAMIC INFLUENCE COEFFICIENTS FROM SUPERSONIC STRIP THEORY: ANALYTICAL DEVELOPMENT AND COMPUTATIONAL PROCEDURE, prepared by W. P. Rodden, E. F. Farkas, H. A. Malcom, and A. M. Kliszewski. 1 August 1962. [47]p. incl. illus, tables. (Report TDR-169(3230-11)TN-1; SSD-TDR-62-74) (Contract AF 04(695)-169) Unclassified report

In this report, we review a method for computing the aerodynamic influence coefficients (AICs) for surfaces with supersonic leading edges. The method is based on the two-dimensional second-order potential solution of Van Dyke. The strip oscillatory coefficients are obtained from the extension of Van Dyke's work by Rodden and Revell to include the effects of sweep and finite span in addition to the effects of thickness, leading to a method that will avoid the unconservatism

(over)

UNCLASSIFIED

UNCLASSIFIED

Aerospace Corporation, El Segundo, California. AERODYNAMIC INFLUENCE COEFFICIENTS FROM SUPERSONIC STRIP THEORY: ANALYTICAL DEVELOPMENT AND COMPUTATIONAL PROCEDURE, prepared by W. P. Rodden, E. F. Farkas, H. A. Malcom, and A. M. Kliszewski. 1 August 1962. [47]p. incl. illus, tables. (Report TDR-169(3230-11)TN-1; SSD-TDR-62-74) (Contract AF 04(695)-169) Unclassified report

In this report, we review a method for computing the aerodynamic influence coefficients (AICs) for surfaces with supersonic leading edges. The method is based on the two-dimensional second-order potential solution of Van Dyke. The strip oscillatory coefficients are obtained from the extension of Van Dyke's work by Rodden and Revell to include the effects of sweep and finite span in addition to the effects of thickness, leading to a method that will avoid the unconservatism

(over)

UNCLASSIFIED

UNCLASSIFIED

Aerospace Corporation, El Segundo, California. AERODYNAMIC INFLUENCE COEFFICIENTS FROM SUPERSONIC STRIP THEORY: ANALYTICAL DEVELOPMENT AND COMPUTATIONAL PROCEDURE, prepared by W. P. Rodden, E. F. Farkas, H. A. Malcom, and A. M. Kliszewski. 1 August 1962. [47]p. incl. illus, tables. (Report TDR-169(3230-11)TN-1; SSD-TDR-62-74) (Contract AF 04(695)-169) Unclassified report

In this report, we review a method for computing the aerodynamic influence coefficients (AICs) for surfaces with supersonic leading edges. The method is based on the two-dimensional second-order potential solution of Van Dyke. The strip oscillatory coefficients are obtained from the extension of Van Dyke's work by Rodden and Revell to include the effects of sweep and finite span in addition to the effects of thickness, leading to a method that will avoid the unconservatism

(over)

UNCLASSIFIED

UNCLASSIFIED

Aerospace Corporation, El Segundo, California. AERODYNAMIC INFLUENCE COEFFICIENTS FROM SUPERSONIC STRIP THEORY: ANALYTICAL DEVELOPMENT AND COMPUTATIONAL PROCEDURE, prepared by W. P. Rodden, E. F. Farkas, H. A. Malcom, and A. M. Kliszewski. 1 August 1962. [47]p. incl. illus, tables. (Report TDR-169(3230-11)TN-1; SSD-TDR-62-74) (Contract AF 04(695)-169) Unclassified report

In this report, we review a method for computing the aerodynamic influence coefficients (AICs) for surfaces with supersonic leading edges. The method is based on the two-dimensional second-order potential solution of Van Dyke. The strip oscillatory coefficients are obtained from the extension of Van Dyke's work by Rodden and Revell to include the effects of sweep and finite span in addition to the effects of thickness, leading to a method that will avoid the unconservatism

(over)

UNCLASSIFIED

UNCLASSIFIED

of linearized theory and will be applicable at Mach numbers below the lower Mach number limit of piston theory. The influence coefficients relate the aerodynamic forces to the surface deflections through the following definitions. In the oscillatory case, $\{F\} = \rho\omega^2 b_r^2 s\,[C_h]\,\{h\}$, and in the steady case, $\{F_s\} = (1/2)\,\rho V^2 (S/\bar{c})\,[C_{hs}]\,\{h\}$. The Aerospace IBM 7090 Computer Program No. HM10 provides the AICs in printed and optional punched-card output formats. The theoretical formulation is limited to Mach numbers normal to the leading edge greater than 1.25. The program capacity is 25 surface strips, 25 values of Mach number, and 50 values of reduced velocity.

UNCLASSIFIED

UNCLASSIFIED

of linearized theory and will be applicable at Mach numbers below the lower Mach number limit of piston theory. The influence coefficients relate the aerodynamic forces to the surface deflections through the following definitions. In the oscillatory case, $\{F\} = \rho\omega^2 b_r^2 s\,[C_h]\,\{h\}$, and in the steady case, $\{F_s\} = (1/2)\,\rho V^2 (S/\bar{c})\,[C_{hs}]\,\{h\}$. The Aerospace IBM 7090 Computer Program No. HM10 provides the AICs in printed and optional punched-card output formats. The theoretical formulation is limited to Mach numbers normal to the leading edge greater than 1.25. The program capacity is 25 surface strips, 25 values of Mach number, and 50 values of reduced velocity.

UNCLASSIFIED

UNCLASSIFIED

of linearized theory and will be applicable at Mach numbers below the lower Mach number limit of piston theory. The influence coefficients relate the aerodynamic forces to the surface deflections through the following definitions. In the oscillatory case, $\{F\} = \rho\omega^2 b_r^2 s\,[C_h]\,\{h\}$, and in the steady case, $\{F_s\} = (1/2)\,\rho V^2 (S/\bar{c})\,[C_{hs}]\,\{h\}$. The Aerospace IBM 7090 Computer Program No. HM10 provides the AICs in printed and optional punched-card output formats. The theoretical formulation is limited to Mach numbers normal to the leading edge greater than 1.25. The program capacity is 25 surface strips, 25 values of Mach number, and 50 values of reduced velocity.

UNCLASSIFIED

UNCLASSIFIED

of linearized theory and will be applicable at Mach numbers below the lower Mach number limit of piston theory. The influence coefficients relate the aerodynamic forces to the surface deflections through the following definitions. In the oscillatory case, $\{F\} = \rho\omega^2 b_r^2 s\,[C_h]\,\{h\}$, and in the steady case, $\{F_s\} = (1/2)\,\rho V^2 (S/\bar{c})\,[C_{hs}]\,\{h\}$. The Aerospace IBM 7090 Computer Program No. HM10 provides the AICs in printed and optional punched-card output formats. The theoretical formulation is limited to Mach numbers normal to the leading edge greater than 1.25. The program capacity is 25 surface strips, 25 values of Mach number, and 50 values of reduced velocity.

UNCLASSIFIED