UNCLASSIFIED

AD NUMBER
AD429215
LIMITATION CHANGES
TO: **Approved for public release; distribution is unlimited.**
FROM: **Distribution: Further dissemination only as directed by Naval Ordnance Test Station, Chine Lake, CA, DEC 1963, or higher DoD authority.**
AUTHORITY
NOTS per DTIC form 55

THIS PAGE IS UNCLASSIFIED

UNCLASSIFIED

AD 429215

DEFENSE DOCUMENTATION CENTER

FOR

SCIENTIFIC AND TECHNICAL INFORMATION

CAMERON STATION, ALEXANDRIA, VIRGINIA

UNCLASSIFIED

NOTICE: When government or other drawings, specifications or other data are used for any purpose other than in connection with a definitely related government procurement operation, the U. S. Government thereby incurs no responsibility, nor any obligation whatsoever; and the fact that the Government may have formulated, furnished, or in any way supplied the said drawings, specifications, or other data is not to be regarded by implication or otherwise as in any manner licensing the holder or any other person or corporation, or conveying any rights or permission to manufacture, use or sell any patented invention that may in any way be related thereto.

64-8

NAVWEPS REPORT 8439
NOTS TP 3395
COPY 57

CATALOGED BY DDC
AS AD No. 429215

AIRCRAFT QUALIFICATION INFORMATION PACKAGE GLADEYE WEAPON SYSTEM

(Bomb Dispenser Mk 4 Mod 0 and Bomb Dispenser Canister Mk 2 Mod 0)

by

Dennis E. Glendenning
Weapons Development Department

DDC
RECEIVED
JAN 30 1964
TISIA B

ABSTRACT. A summary of the information necessary for an aircraft manufacturer or other qualified agency to establish compatibility and performance characteristics of an aircraft loaded with a Gladeye Dispenser System is presented. This report should be used as a basis for any such study.

Released to ASTIA for further dissemination with out limitations beyond those imposed by [illegible] regulations.

429215

U.S. NAVAL ORDNANCE TEST STATION
China Lake, California
December 1963

U. S. NAVAL ORDNANCE TEST STATION

AN ACTIVITY OF THE BUREAU OF NAVAL WEAPONS

C. BLENMAN, JR., CAPT., USN
Commander

WM. B. MCLEAN, PH.D.
Technical Director

FOREWORD

The Gladeye Weapon System was designed and developed by the Naval Ordnance Test Station to provide the Navy with a modular-type dispenser of stockpiled ordnance for use on present high-performance aircraft.

This report summarizes the information required by an aircraft manufacturer (or other agencies) to establish the compatibility of the Gladeye Weapon System with the bomb racks and the aircraft that are to carry this weapon.

The Gladeye development program has been carried out under Bureau of Naval Weapons WepTask RM3773-009/216-1/F008-22-002 as a part of the over-all Free-Fall RDT&E Program established in 1960 to improve the effectiveness and efficiency of the air-attack conventional weapon capability of the Naval Carrier Task Forces.

This report has been reviewed for technical accuracy by Dr. M. M. Rogers and R. C. V. Reed.

Released by
F. H. KNEMEYER, Head,
Weapons Development Dept.
6 December 1963

Under authority of
WM. B. McLEAN
Technical Director

NOTS Technical Publication 3395
NAVWEPS Report 8439

Published by ..... Weapons Development Department
Manuscript 40/MS 63-50
Collation ..... Cover, 13 leaves, abstract cards
First printing ..... 120 numbered copies
Security classification ..... UNCLASSIFIED

ABSTRACT CARD

U. S. Naval Ordnance Test Station
Aircraft Qualification Information Package Gladeye Weapon System (Bomb Dispenser Mk 4 Mod 0 and Bomb Dispenser Canister Mk 2 Mod 0), by Dennis E. Glendenning. China Lake, Calif., NOTS, December 1963. 26 pp. (NAVWEPS 8439, NOTS TP 3395), UNCLASSIFIED.

ABSTRACT. A summary of the information necessary for an aircraft manufacturer or other qualified agency to establish compatibility and performance characteristics of an aircraft loaded with a Gladeye Dispenser System is presented. This report should be used as a basis of any such study.

1 card, 4 copies

U. S. Naval Ordnance Test Station
Aircraft Qualification Information Package Gladeye Weapon System (Bomb Dispenser Mk 4 Mod 0 and Bomb Dispenser Canister Mk 2 Mod 0), by Dennis E. Glendenning. China Lake, Calif., NOTS, December 1963. 26 pp. (NAVWEPS 8439, NOTS TP 3395), UNCLASSIFIED.

ABSTRACT. A summary of the information necessary for an aircraft manufacturer or other qualified agency to establish compatibility and performance characteristics of an aircraft loaded with a Gladeye Dispenser System is presented. This report should be used as a basis of any such study.

1 card, 4 copies

U. S. Naval Ordnance Test Station
Aircraft Qualification Information Package Gladeye Weapon System (Bomb Dispenser Mk 4 Mod 0 and Bomb Dispenser Canister Mk 2 Mod 0), by Dennis E. Glendenning. China Lake, Calif., NOTS, December 1963. 26 pp. (NAVWEPS 8439, NOTS TP 3395), UNCLASSIFIED.

ABSTRACT. A summary of the information necessary for an aircraft manufacturer or other qualified agency to establish compatibility and performance characteristics of an aircraft loaded with a Gladeye Dispenser System is presented. This report should be used as a basis of any such study.

1 card, 4 copies

U. S. Naval Ordnance Test Station
Aircraft Qualification Information Package Gladeye Weapon System (Bomb Dispenser Mk 4 Mod 0 and Bomb Dispenser Canister Mk 2 Mod 0), by Dennis E. Glendenning. China Lake, Calif., NOTS, December 1963. 26 pp. (NAVWEPS 8439, NOTS TP 3395), UNCLASSIFIED.

ABSTRACT. A summary of the information necessary for an aircraft manufacturer or other qualified agency to establish compatibility and performance characteristics of an aircraft loaded with a Gladeye Dispenser System is presented. This report should be used as a basis of any such study.

1 card, 4 copies

INTRODUCTION

The development of the Gladeye Weapon System has been carried out at the Naval Ordnance Test Station to meet the requirements of the Navy for a low-cost, all-purpose dispenser of stockpiled ordnance for use with present tactical aircraft. The weapon has the capability of dispensing a variety of Army- and Navy-developed bomblet systems and devices in large loads per aircraft station.

To establish compatibility and performance characteristics of the Gladeye weapon system with an aircraft, the following areas must be investigated by an aircraft manufacturer (or other agencies) as designated by the Bureau of Naval Weapons:

1. Spatial and mechanical clearances
2. Static strength
3. Stability and control
4. Dynamic loadings
5. Electrical loads
6. Performance effects

The purpose of this report is to furnish the data that are required by the cognizant agency to carry out these compatibility studies. The general description, operation, physical characteristics, and other requirements of the weapon system are presented. The sequence of operations for loading and preparation are also provided to aid in compatibility studies.

GENERAL DESCRIPTION

The Gladeye (Fig. 1) is a modular-type dispenser system consisting of two major units: (1) seven identical cylindrical sections (Canisters Mk 2 Mod 0) plus an aerodynamic nose and tail fairing, and (2) the dispenser assembly (Bomb Dispenser Mk 4 Mod 0) to which the canisters are attached and which incorporates the rack adapter. The dispenser assembly contains seven canister ejector assemblies. Each ejection assembly is actuated by two Bomb Ejection Cartridges Mk 2 Mod 1 wired in parallel to provide a sympathetic-redundant ignition system. The canister retaining hooks are released by a gas-operated sear. The canister ejector assemblies are fired in sequence (rear to front) by an intervalometer located in the forward fairing of the dispenser. The intervalometer provides four modes of ejection: single (pilot option), slow salvo (300 ms), medium salvo (100 ms), and fast salvo (50 ms).

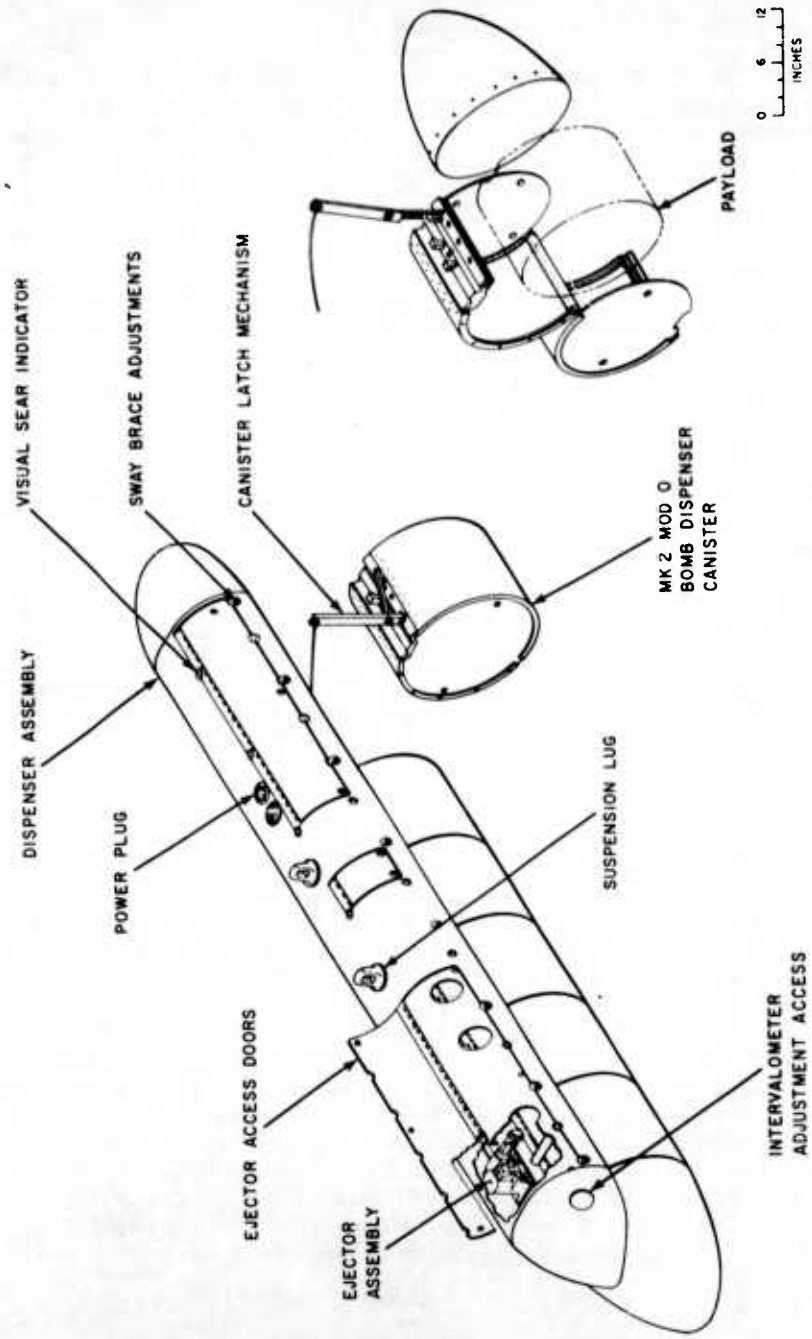

FIG. 1. Gladeye Weapon System.

The Gladeye Dispenser Assembly is shipped with the ejectors and the intervalometer installed. Expendable components--i. e., bomb ejector cartridges, loaded canisters, nose and tail fairings--are shipped as required.

The Bomb Dispenser Canister loaded gross weight can vary from 195 to 32 lb total weight depending on the payload used. The following canister weights will be used for compatibility analysis: 195, 150, 88.5, 75, 50, and 32 lb.

The Gladeye weapon was designed to dispense a long narrow pattern of munitions from low altitudes, thus making it ideal for strafing and close air-support missions. These missions often require additional external fuel tanks. For this reason, any performance and stability analysis should include--in addition to a full weapon complement--a more optimum loading including external fuel tanks.

The Gladeye dispenser system is designed for aircraft carriage at speeds up to Mach 1 with a delivery speed range from 100 to 600 knots IAS. Delivery altitudes range from 50 to 10,000 ft AGL. Environmental conditions of release have included all of those specified in MIL-T-7743.

PREPARATION AND LOADING OPERATIONS

PREPARATION OF DISPENSER

1. Remove dispenser from crate. Insert two bomb lugs and suspend the dispenser at a convenient height above deck. Both of the lugs should be used to suspend the weapon as the CG will shift during loading. Back off sway brace bolts as far as possible.

2. Observe the intervalometer through the opening in the forward fairing and set the position indicator to SAFE.

3. Remove the seven safety pins from the ejector assemblies.

4. Open each of the ejector-latching assemblies by prying up on the visual sear indicator located on top of the dispenser, as shown in Fig. 1.

LOADING OF CANISTERS ON DISPENSER

1. Hoist the canister into position No. 4 of the dispenser, allowing canister lugs to rise into the guides cast into the bottom of the ejector-latching assembly. Observe that an upward pressure on the canister

causes the hooks to close allowing the sear to drop into the locked position. This sear motion is observed from the top of the dispenser. When the sear is down and locked, the safety pin must be inserted.

> WARNING: After this operation, safety pins must not be removed until immediately prior to takeoff.

Repeat the above procedure on stations No. 5, 3, 6, 2, 7, 1, in that order. Note that canisters No. 1 and 7 must have fairing rivets facing outboard.

2. Open the cartridge access doors and remove the firing leads (spark-plug type). Unscrew the cartridge holders and remove the cylinders (bayonet-type fastening).

> WARNING: Do not open cartridge access doors in a high-energy electromagnetic area.

3. Remove the protective caps from the two Mk 2 Mod 1 Bomb Ejection Cartridges and insert the cartridges facing each other into the cylinder. Replace the cylinder into the cartridge holder and replace the holder into the ejector-latching unit. Replace the firing lead. Repeat steps 2 and 3 for all ejector-latching units.

4. Lower the weapon onto skid and move to loading area.

5. Assemble the frangible fairings onto canisters No. 1 and 7 using fairing attachment rivets. Rotate the fairing until a click is heard or the arrows are aligned.

6. If the weapon is to be hoisted aboard the aircraft using Mk 8 bomb hoists, insert the special hoisting lugs into the recesses that are cast on either side of position No. 4. Sling the small cable attaching lugs together under the weapon. The Mk 8 hoists can then be used to hoist the weapon with no further rigging. These lugs are shipped as part of the maintenance kit.

> WARNING: Weapon must be racked and sway braces tightened before firing plug is inserted.

7. The intervalometer is adjusted through the opening in the forward fairing. Move the mode selector to the mode desired and the position indicator to the arm position.

DISASSEMBLY

In case a weapon is returned with a partial load or for any reason it must be disassembled, the following procedure will be used.

> WARNING: Replace safety pins and set intervalometer to SAFE immediately upon return of aircraft. NOTE: The intervalometer is set SAFE by pushing in on the position selector and turning clockwise.

1. Remove weapon from aircraft and suspend above deck using both bomb lugs.

> NOTE: To avoid damage be sure the intervalometer is returned only after disengaging ratchet by pushing the selector in.

2. Remove cartridge holder from weapon and remove cartridges from cylinder. Replace both holder and cylinder after cleaning.

3. Remove fairing by releasing spring lock and rotate to disassemble.

4. Remove safety pins from weapon.

5. Provide support for each canister before prying up visual sear indicator to release manually.

6. Stow components until needed.

CLEARANCE

Scale drawings of the loaded Gladeye dispenser are included as Fig. 2 and 3. Note the clearance necessary for safety pin removal as well as sear motion during the ejection process. It will also be noted that an intervalometer mode and selector adjustment is necessary through the access port after the weapon is aboard the aircraft. This adjustment requires the use of a medium-size screwdriver, and that the operator look directly into the port to avoid a parallax error in the setting. It is imperative that the mode and selector adjustment be

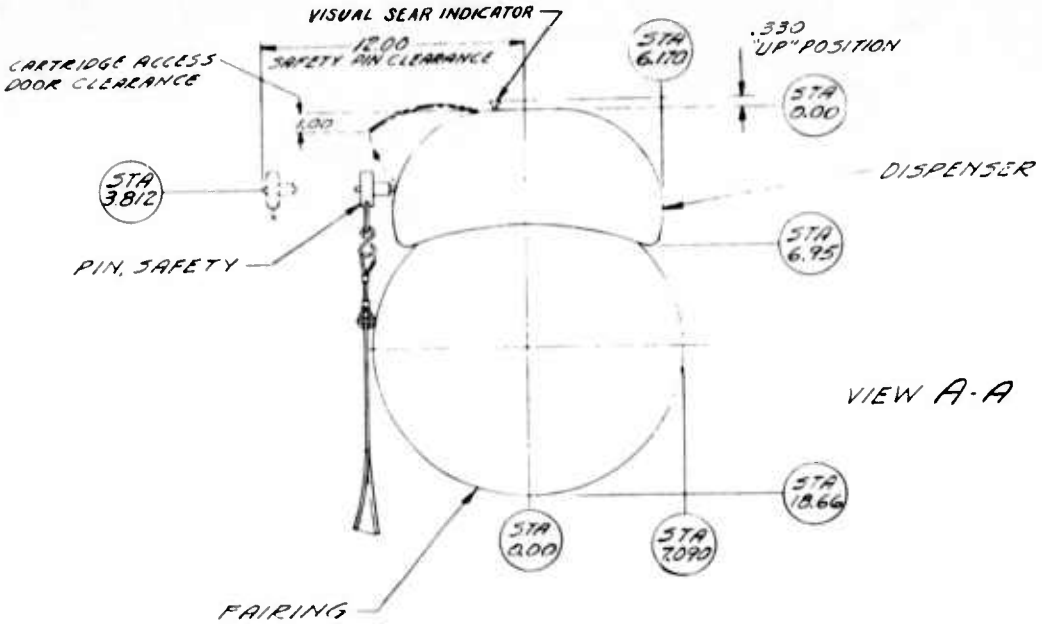

FIG. 2. Loaded Bomb Dispenser, End View.

completed after the weapon is hung on the rack and connected to its power source because of the RADHAZ danger. It should also be noted that the cartridges are installed prior to installation on aircraft for RADHAZ reasons.

WEIGHT, CG, AND MOMENT OF INERTIA

The configuration of the Gladeye Weapon System establishes a weight, CG, and moment of inertia which vary as canisters are ejected. For this reason the weapon weights, horizontal CG, and moments of inertia are presented in tabular form in Fig. 4 through 9 for 32-, 50-, 75-, 88.5-, 150-, and 195-lb canister weights. The values presented in the tables of these figures represent test data and hence are limited to the accuracy of the instruments used. It is felt, however, that this represents a truer picture than an analytical approach.

The weapon CG shift for the vertical plane, however, was derived analytically because of the difficulty in accurate measurement in this plane and is presented in Fig. 10-16. It should be noted that the distance from the weapon CG to intersection of lines of action of sway brace forces as required by MIL-A-8591 is presented as values A through G.

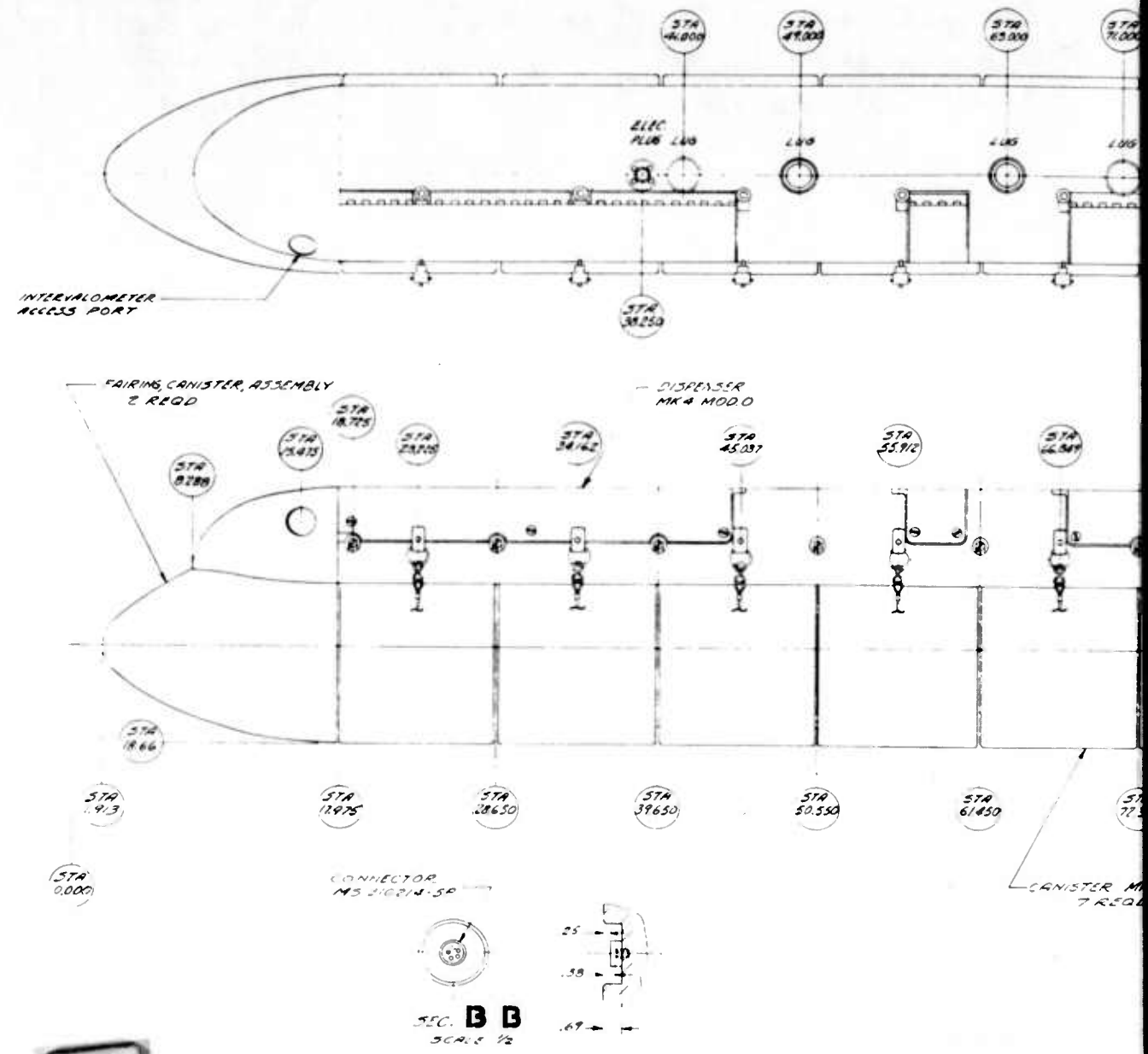

FIG. 3. Loaded Bomb Dispenser Mk 4 Mod 0 (G

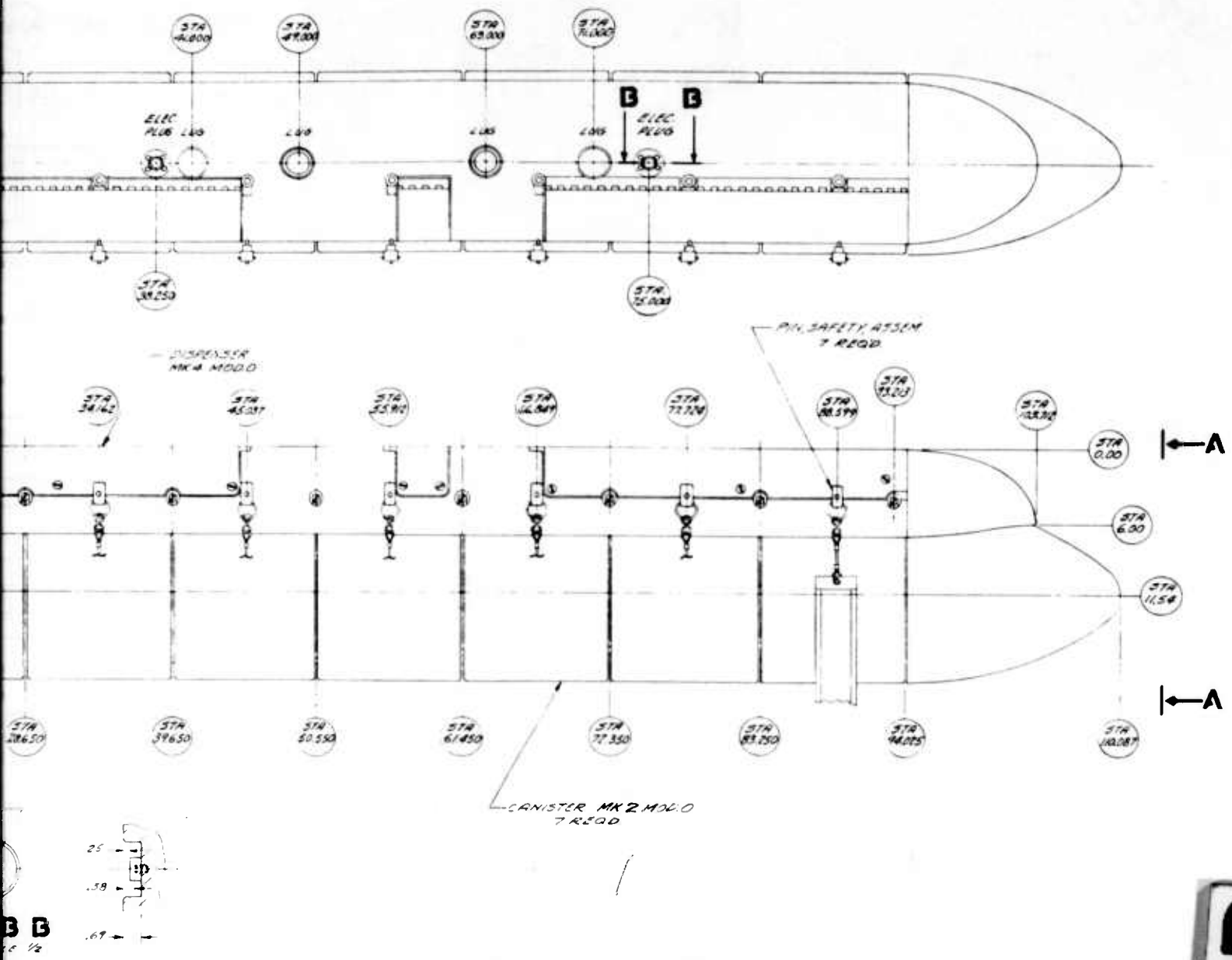

FIG. 3. Loaded Bomb Dispenser Mk 4 Mod 0 (Gladeye).

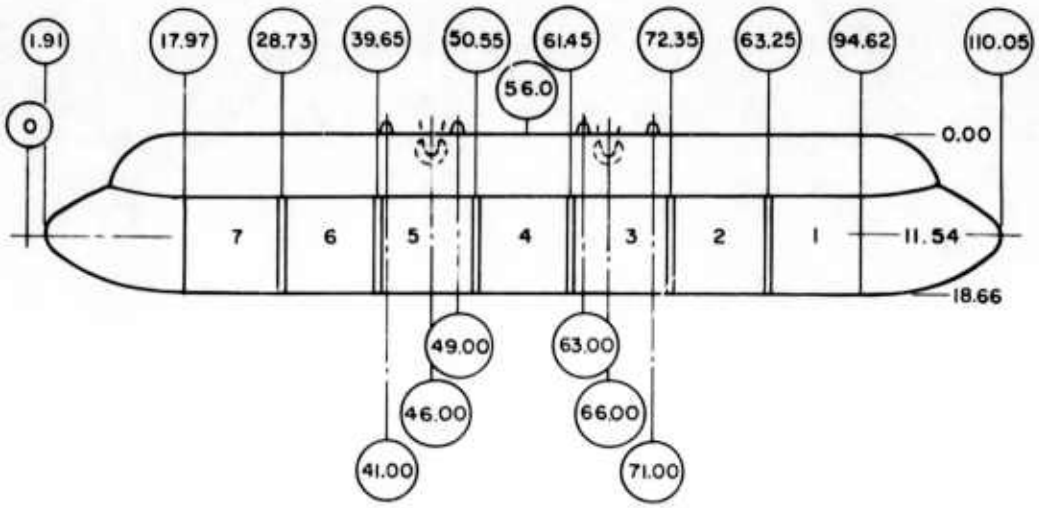

32 LB. CANISTER									
7	6	5	4	3	2	1	WT.	C.G	$I_{C.G.}$
X							215	51.12	4,260
X	X						247	49.18	4,420
X	X	X					279	48.25	4,440
X	X	X	X				311	49.43	4,550
X	X	X	X	X			343	51.00	4,830
X	X	X	X	X	X		375	53.12	5,540
X	X	X	X	X	X	X	410	56.25	6,860

FIG. 4. Weapon Horizontal CG and Moment of Inertia Data, 32-lb Canisters.

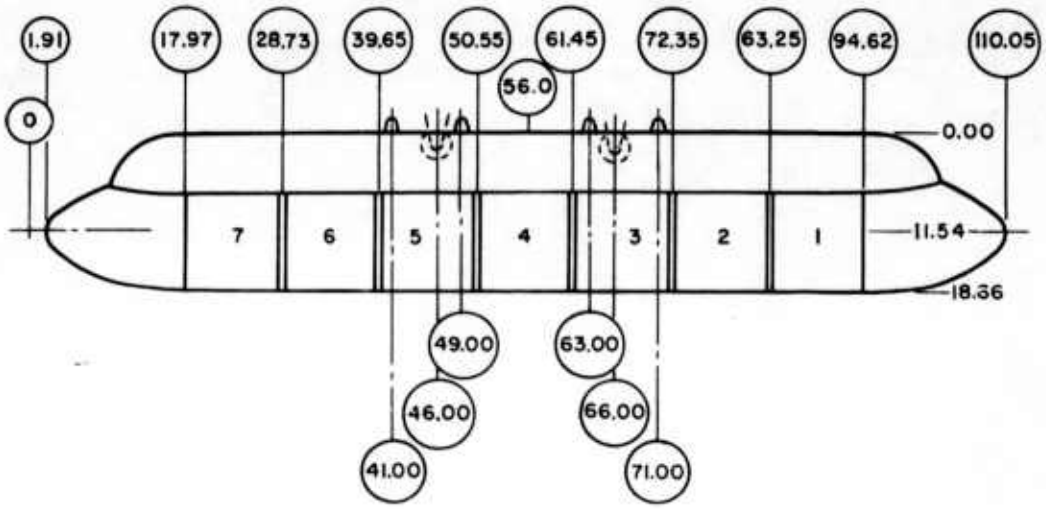

50 LB. CANISTER									
7	6	5	4	3	2	1	WT.	C.G.	$I_{C.G.}$
X							230	48.94	4,600
X	X						288	46.62	4,890
X	X	X					338	46.12	4,890
X	X	X	X				388	47.50	5,060
X	X	X	X	X			438	49.62	5,630
X	X	X	X	X	X		488	52.44	6,670
X	X	X	X	X	X	X	541	56.00	8,800

FIG. 5. Weapon Horizontal CG and Moment of Inertia Data, 50-lb Canisters.

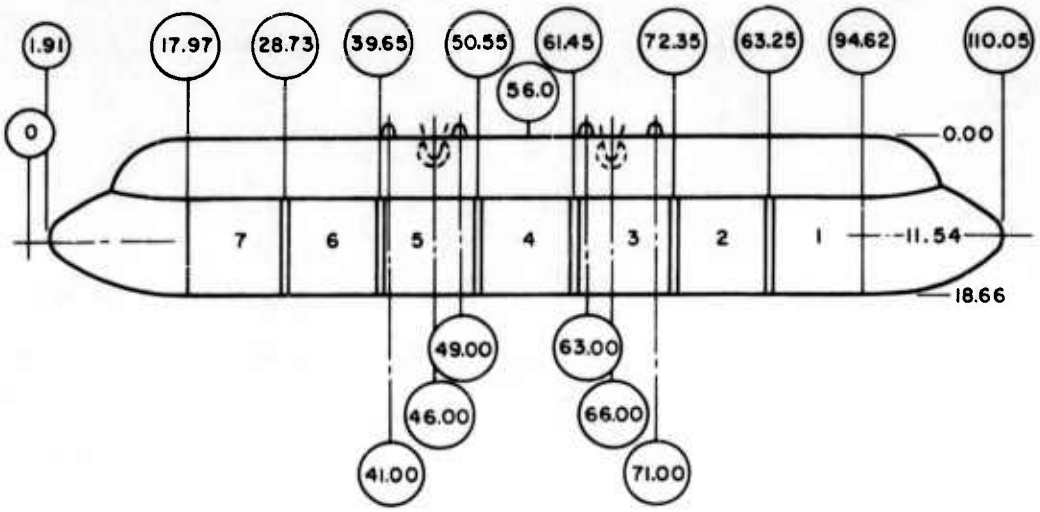

75 LB. CANISTER									
7	6	5	4	3	2	1	WT	C.G.	$I_{C.G.}$
X							266	46.50	5,100
X	X						341	43.81	5,450
X	X	X					416	44.19	5,540
X	X	X	X				491	45.81	5,820
X	X	X	X	X			566	48.69	6,770
X	X	X	X	X	X		641	52.88	8,670
X	X	X	X	X	X	X	716	56.00	11,680

FIG. 6. Weapon Horizontal CG and Moment of Inertia Data, 75-lb Canisters.

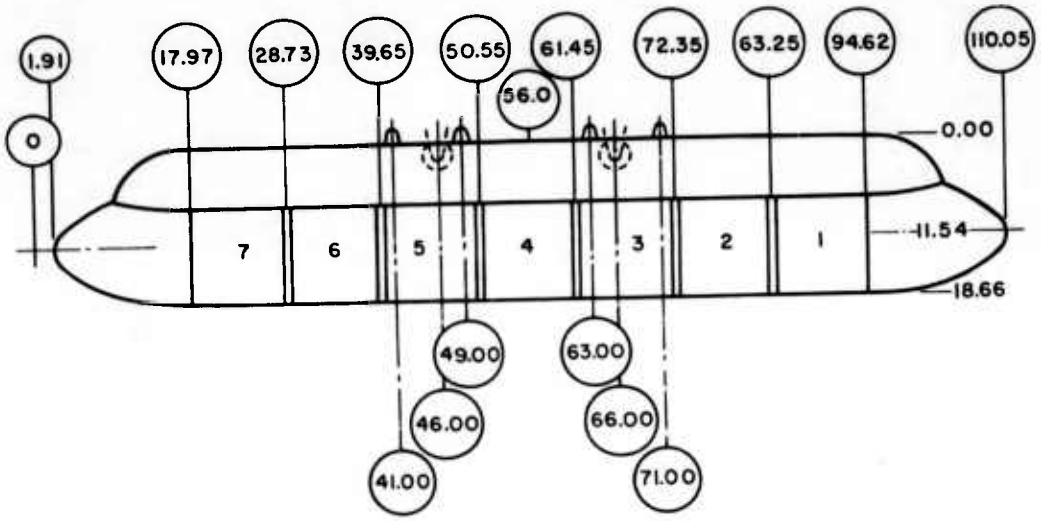

88.5 LB. CANISTER									
7	6	5	4	3	2	1	WT.	C.G.	$I_{C.G.}$
X							277	44.88	5,260
X	X						365	42.38	5,570
X	X	X					454	42.94	5,620
X	X	X	X				542	45.31	6,200
X	X	X	X	X			613	48.38	7,250
X	X	X	X	X	X		719	51.94	9,430
X	X	X	X	X	X	X	810	56.00	13,050

FIG. 7. Weapon Horizontal CG and Moment of Inertia Data, 88.5-lb Canisters.

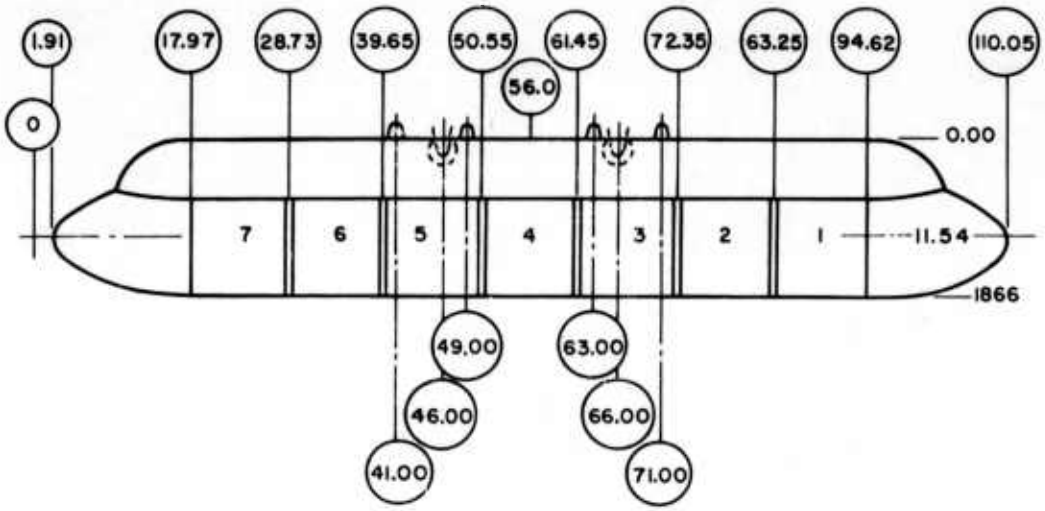

150 LB. CANISTER									
7	6	5	4	3	2	1	WT.	C.G.	$I_{C.G.}$
X							337	41.25	6,040
X	X						487	38.92	6,330
X	X	X					637	40.68	6,560
X	X	X	X				787	43.87	7,610
X	X	X	X	X			937	47.25	9,800
X	X	X	X	X	X		1087	51.50	13,800
X	X	X	X	X	X	X	1240	56.00	19,750

FIG. 8. Weapon Horizontal CG and Moment of Inertia Data, 150-lb Canisters.

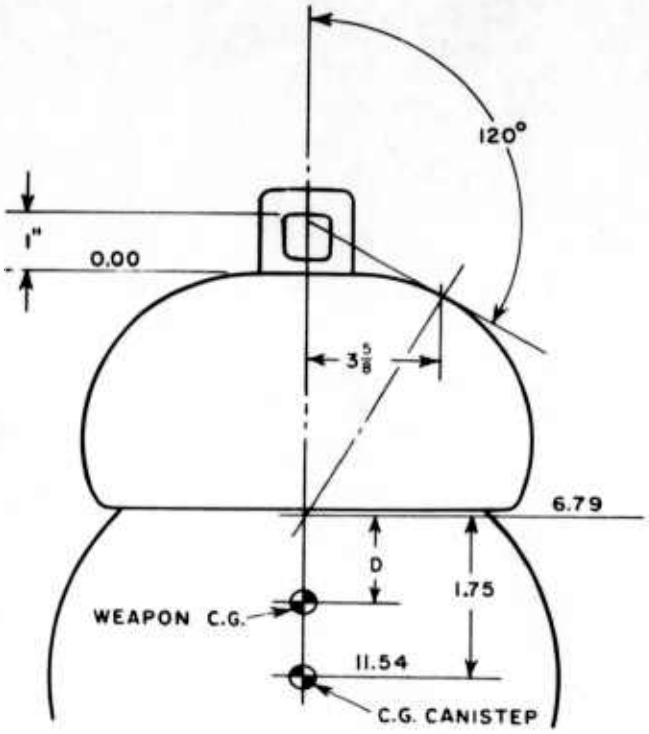

7	6	5	4	3	2	1	WT	C.G.	D
							183	2.85	-4.14
X							215	4.15	-2.64
X	X						247	5.10	-1.69
X	X	X					279	5.84	- 95
X	X	X	X				311	6.42	- .37
X	X	X	X	X			343	6.90	+ .11
X	X	X	X	X	X		375	7.30	.51
X	X	X	X	X	X	X	407	7.63	.84

FIG. 10. Weapon Vertical CG Data, Aero 20A Rack With 32-lb Canisters.

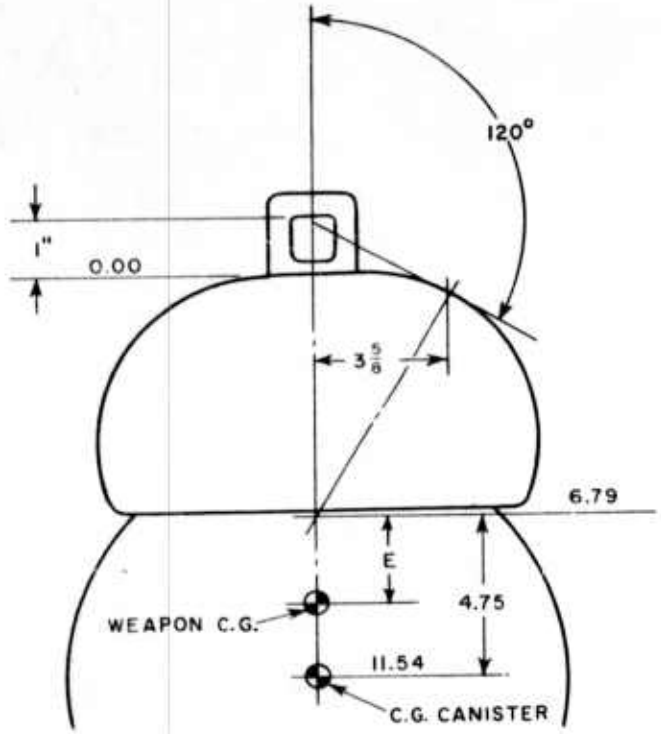

7	6	5	4	3	2	1	WT.	C.G.	E
							183	2.85	-4.14
X							233	4.73	-2.06
X	X						283	5.92	- .87
X	X	X					333	6.78	- .01
X	X	X	X				383	7.39	+ .60
X	X	X	X	X			433	7.90	1.11
X	X	X	X	X	X		483	8.29	1.50
X	X	X	X	X	X	X	533	8.55	1.76

FIG. 11. Weapon Vertical CG Data, Aero 20A Rack With 50-lb Canisters.

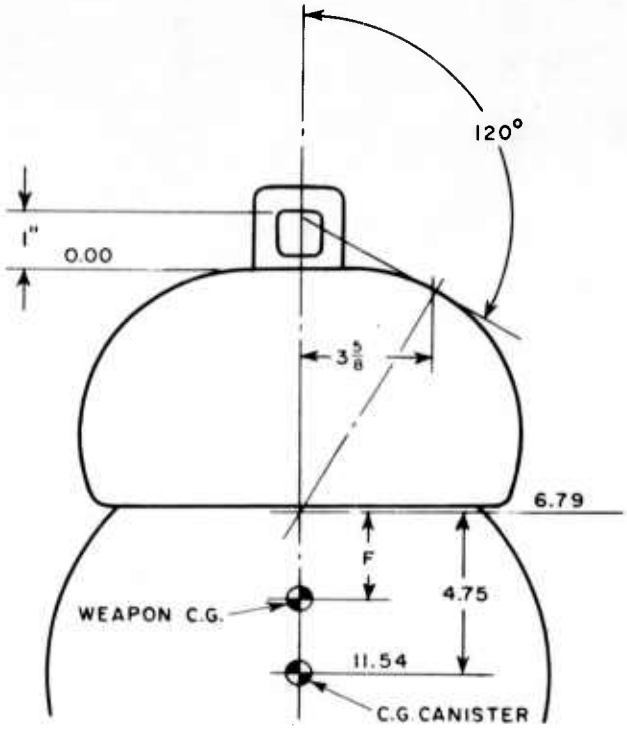

7	6	5	4	3	2	1	WT.	C.G.	F
							183	2.85	-4.14
X							258	5.41	-1.38
X	X						333	6.86	+ .07
X	X	X					408	7.71	.92
X	X	X	X				483	8.28	1.49
X	X	X	X	X			558	8.75	1.96
X	X	X	X	X	X		633	9.10	2.31
X	X	X	X	X	X	X	708	9.36	2.57

FIG. 12. Weapon Vertical CG Data, Aero 20A Rack With 75-lb Canisters.

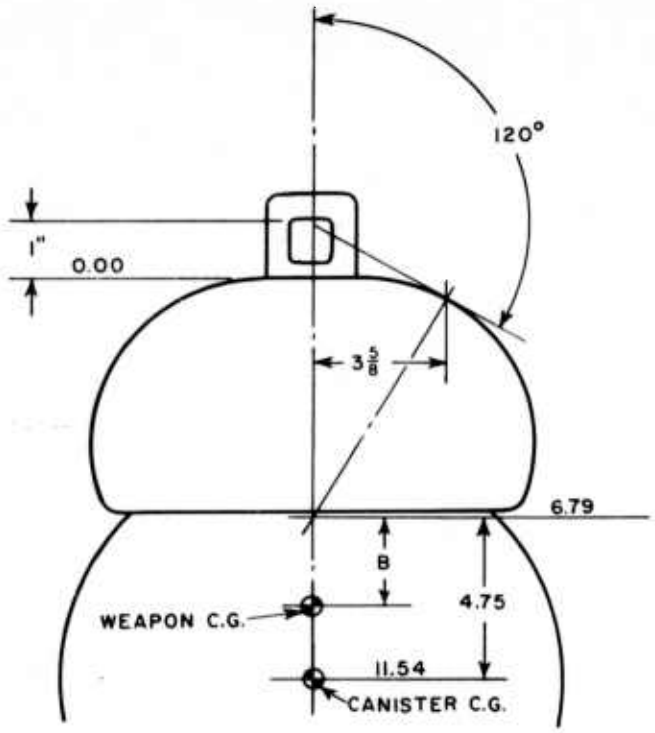

7	6	5	4	3	2	1	WT.	C.G.	B
							183	2.85	−4.14
X							273.5	5.66	−1.13
X	X						362.0	7.10	+ .31
X	X	X					450.5	7.97	1.18
X	X	X	X				539.0	8.56	1.77
X	X	X	X	X			627.5	8.98	2.19
X	X	X	X	X	X		716.0	9.29	2.50
X	X	X	X	X	X	X	804.5	9.54	2.75

FIG. 13. Weapon Vertical CG Data, Aero 20A Rack With 88.5-lb Canisters.

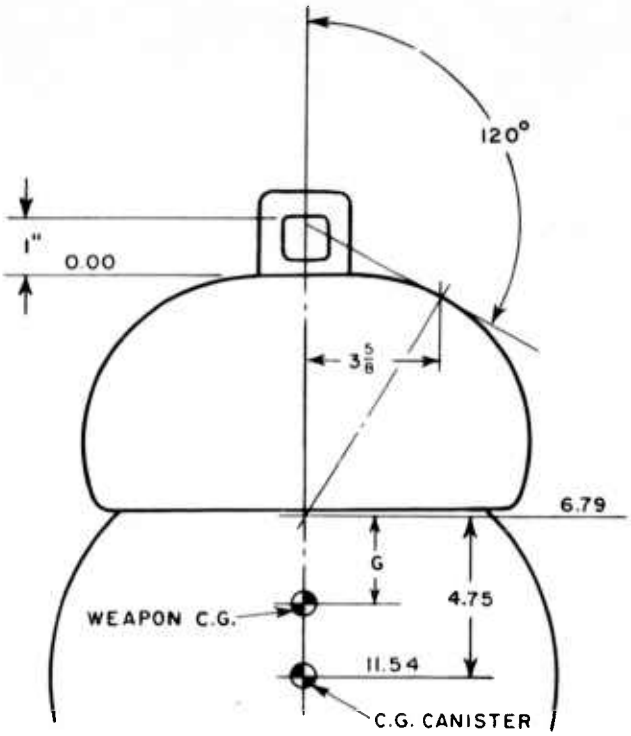

7	6	5	4	3	2	1	WT.	C.G	G
							183	2.85	−4.14
X							333	6.76	− .03
X	X						483	8.24	+1.48
X	X	X					633	9.02	2.26
X	X	X	X				783	9.50	2.74
X	X	X	X	X			933	9.83	3.07
X	X	X	X	X	X		1083	10.05	3.29
X	X	X	X	X	X	X	1283	10.20	3.44

FIG. 14. Weapon Vertical CG Data, Aero 20A Rack With 150-lb Canisters.

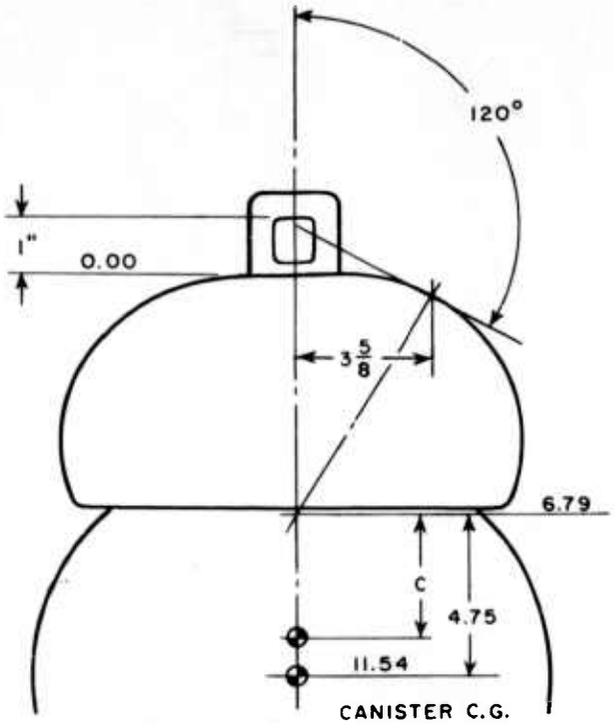

7	6	5	4	3	2	1	WT	C.G.	C
							185	2.85	− 4.14
X							380	7.31	+ .52
X	X						575	8.74	1.95
X	X	X					770	9.45	2.66
X	X	X	X				965	9.87	3.08
X	X	X	X	X			1160	10.15	3.36
X	X	X	X	X	X		1355	10.35	3.54
X	X	X	X	X	X	X	1550	10.50	3.71

FIG. 15. Weapon Vertical CG Data, Aero 20A Rack With 195-lb Canisters.

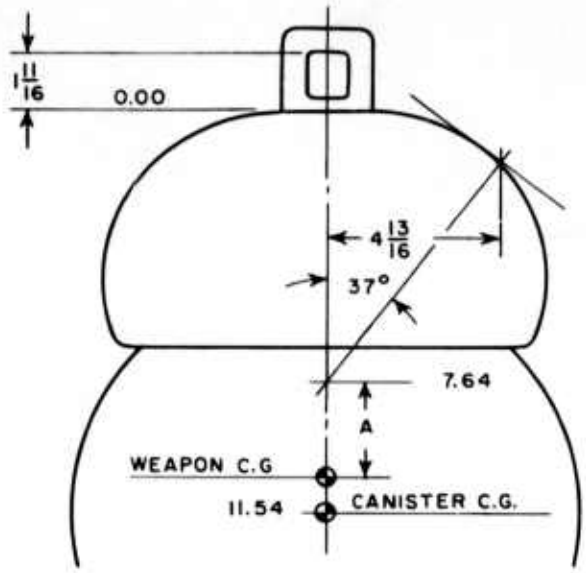

7	6	5	4	3	2	1	WT	C.G.	A
							185	2.85	−1.99
X							380	7.31	− .33
X	X						575	8.74	+ 1.10
X	X	X					770	9.45	1.81
X	X	X	X				965	9.87	2.23
X	X	X	X	X			1160	10.15	2.51
X	X	X	X	X	X		1355	10.35	2.71
X	X	X	X	X	X	X	1550	10.50	2.86

FIG. 16. Weapon Vertical CG Data, Aero 7A Rack With 195-lb Canisters.

All distances are in units of inches, CG locations are in terms of weapon stations, and moments of inertia are in slug-in^2. Weights are in pounds.

SPECIAL REQUIREMENTS

EJECTION LOADS

As can be seen from the weapon configuration, when a Gladeye canister is ejected, the rack on which the weapon is mounted reacts to the ejection force as well as the couple so produced.

Figure 17 shows the Gladeye ejector and its method of function. The gas pressure produced by the Mk 2 ejection cartridges provides the release action as well as the ejection force. Since the sear piston overcomes its spring force at approximately 63% of peak pressure, and since the volume change during ejection is small as compared to the total volume, the ejection force of the ejector does not vary appreciably with different canister weights. These characteristics also have the effect of maintaining an almost linear ejection acceleration with respect to canister weight. This ejector is remarkably little affected by temperature variations. For these reasons the canister ejection force may be considered a constant as represented by a plot of typical pressure and ejection force versus time shown in Fig. 18.

Figure 19 shows a plot of loads experienced by the aircraft under a fast salvo ejection utilizing an Aero 7A Rack. The setup for this test is shown in Fig. 20.

ELECTRICAL REQUIREMENTS

The Gladeye dispenser wiring diagram and intervalometer schematic is presented in Fig. 21. Gladeye was designed to utililize the bomb-rocket firing circuit of Navy aircraft, and currently utilizes pin A of the rocket plug for a positive 28 VDC and pin E for ground. This was done to establish compatibility with a wiring change suggested by NOTS and with fleet-configured aircraft. It was found that, with the existing current-limiting resistor in the rocket-fire current, insufficient current was available for reliable cartridge ignition. However, with the resistor removed the power was adequate. Since this problem was common not only to Gladeye, but also to other items utilizing this circuit to squibs, it was suggested that the unused pin D be fitted with a firing lead bypassing the current-limiting resistor. Action on this suggestion is still pending.

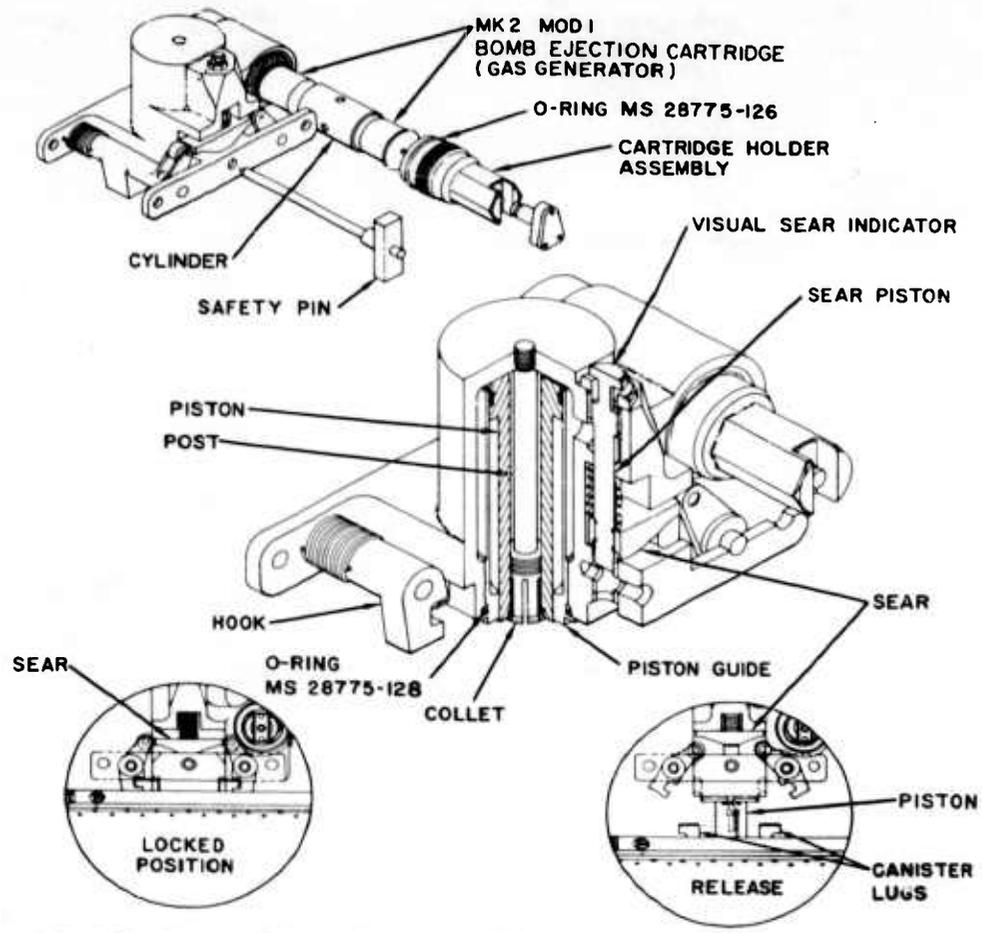

1. FIRING PULSE CAUSES CARTRIDGE IGNITION.
2. GAS PRESSURE BUILDS UP.
3. GAS PRESSURE MOVES PISTON AGAINST CANISTER, CAUSING COLLET TO GRASP LANYARD PIN OF MK 2 CANISTER.
4. SEAR MOVES IN UPWARD DIRECTION DUE TO GAS PRESSURE ON SEAR PISTON.
5. SEAR MOVEMENT LEAVES HOOKS FREE TO UNLATCH.
6. CANISTER IS EJECTED AWAY BY PISTON, AND LANYARD UNRAVELS FROM CANISTER.
7. LANYARD OPENS CANISTER.

FIG. 17. Canister Ejector Assembly.

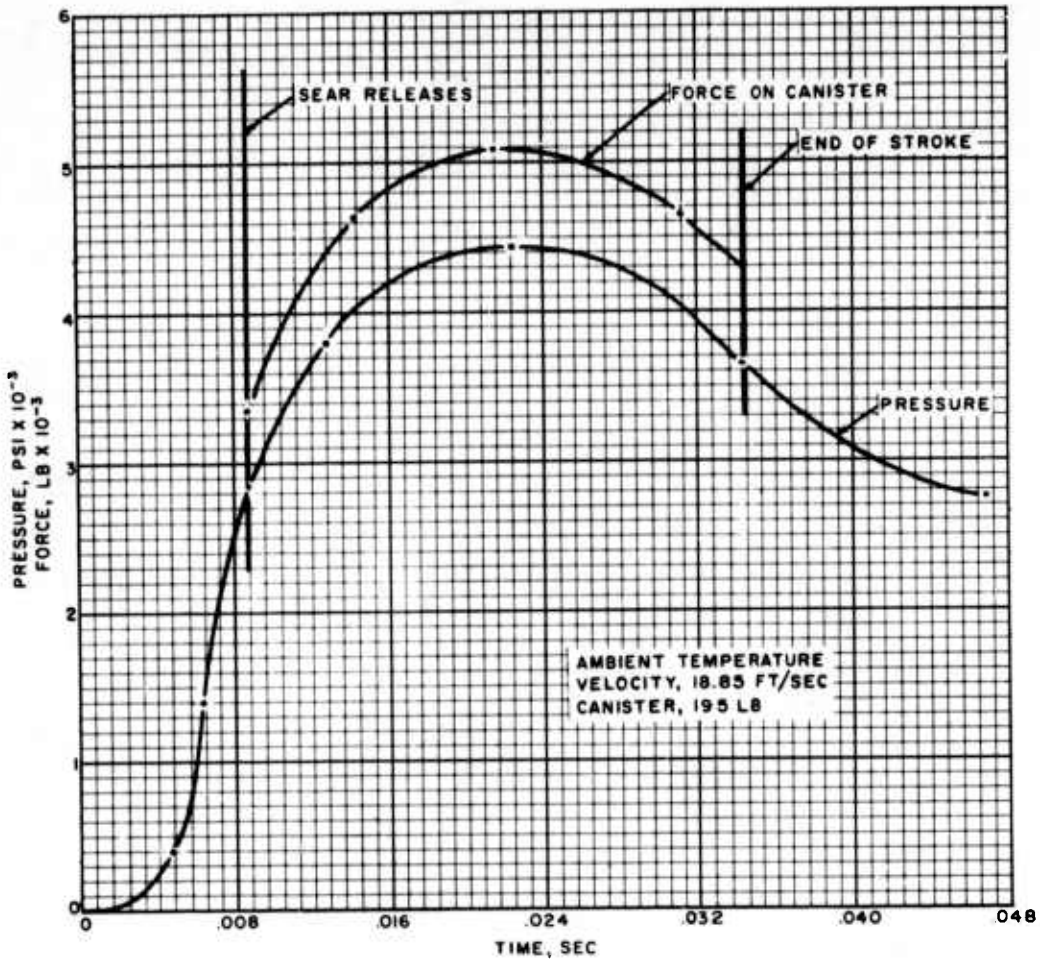

FIG. 18. Typical Pressure and Ejection Force Versus Time (195-lb Canister, Ambient Temperature, 18.85-ft/sec Velocity).

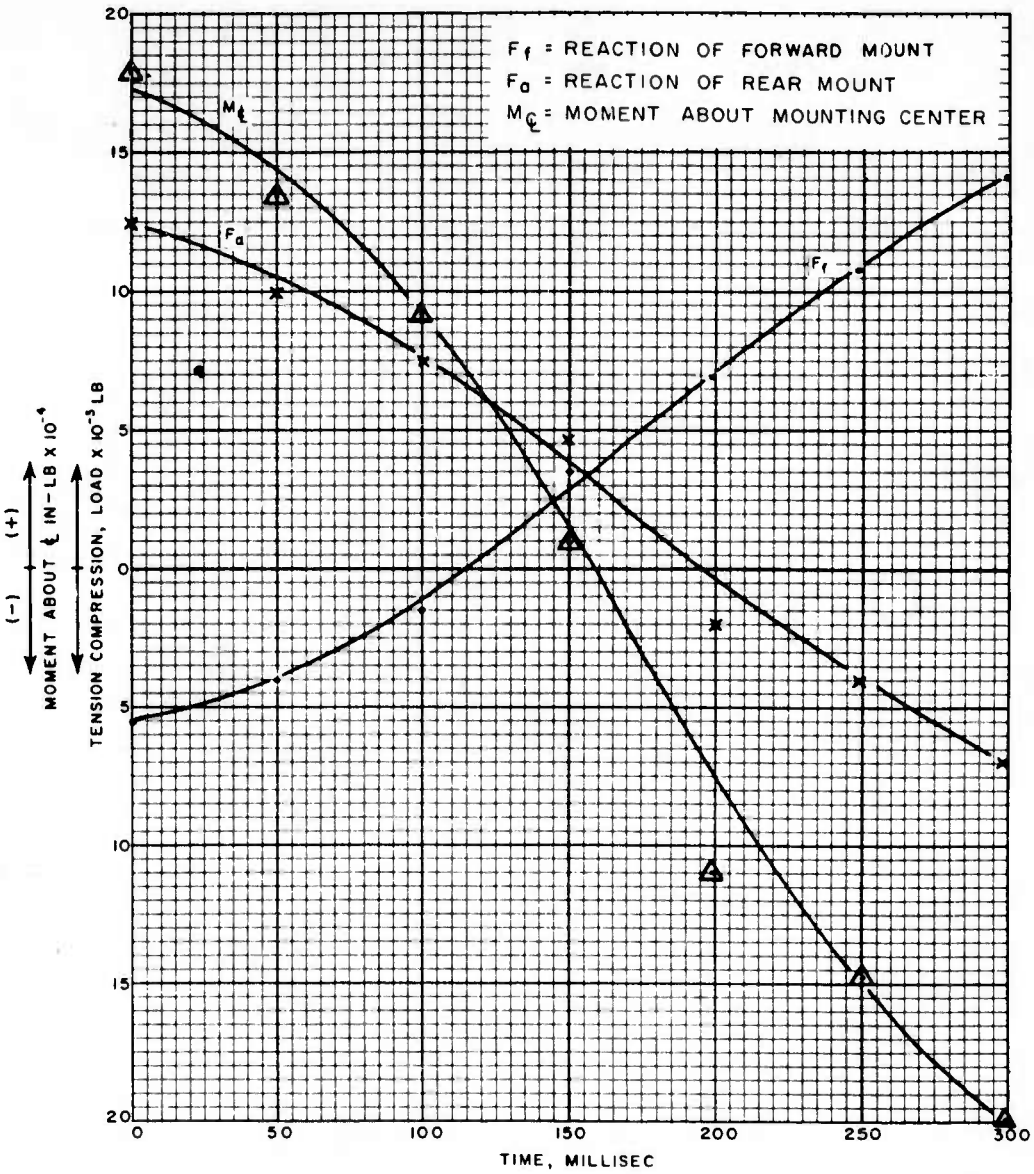

FIG. 19. Loads Experienced by Aircraft Under Fast Salvo Ejection Utilizing an Aero 7A Rack, and 195-lb Canisters.

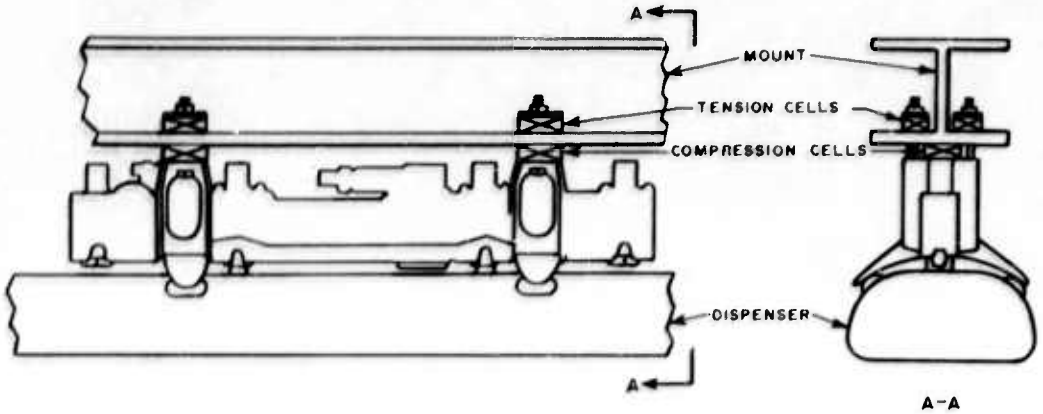

FIG. 20. Ejection Load Test Setup.

The Gladeye intervalometer provides a single-fire capability as well as three salvo modes. These salvo modes provide for a delay between canisters of 50, 100, and 300 ms. The intervalometer current requirement between firing pulses is 3.0 amperes in salvo modes. It is designed so as not to draw any current during cartridge firing. The output pulse from the intervalometer to each ejector is approximately 24 ms long. Current test data indicate that reliable cartridge ignition of both cartridges for this pulse width requires 12 amperes.

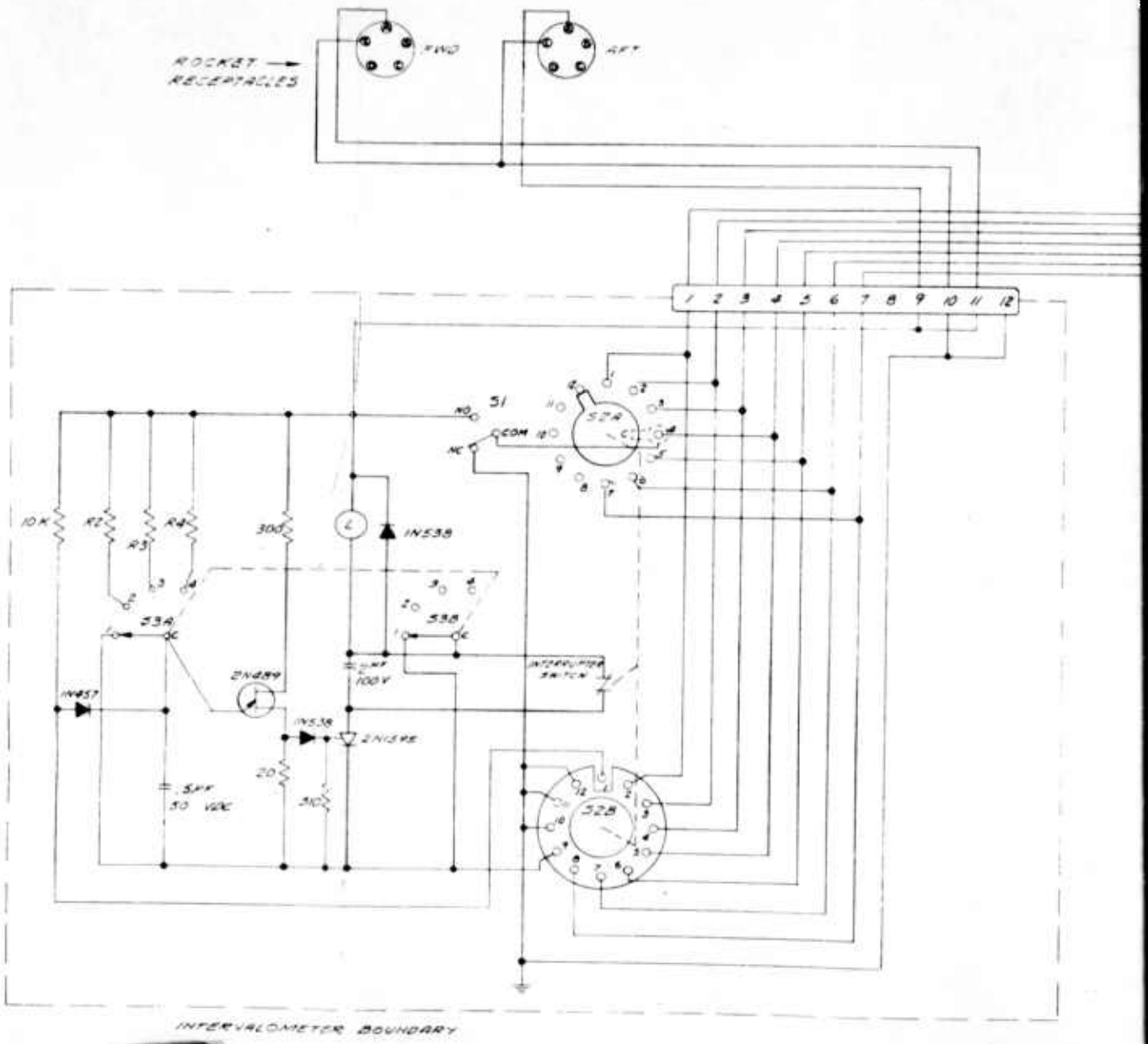

FIG. 21. Gladeye Dispenser Wiring Diagram and Inter

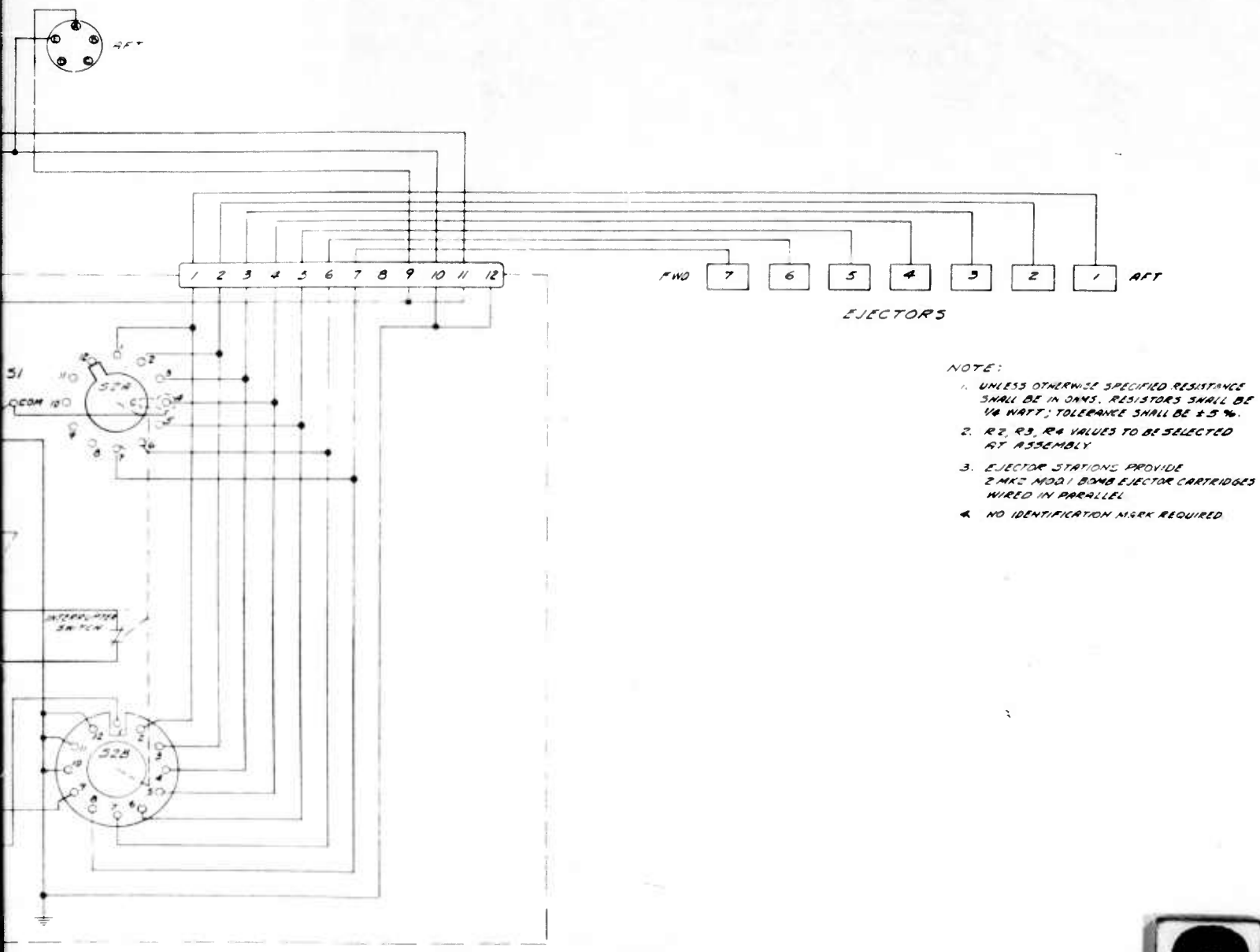

FIG. 21. Gladeye Dispenser Wiring Diagram and Intervalometer Schematic.

INITIAL DISTRIBUTION

22 Chief, Bureau of Naval Weapons

DLI-31 (2)	RMMO (1)
RAAD-13 (1)	RMMO-2 (1)
RAAV-3 (1)	RMMO-3 (1)
RAAV-4 (1)	RMMO-4 (1)
RM-12 (1)	RMMO-43 (3)
RM-3 (1)	RMMP-4 (1)
RM-33 (1)	RSWI-2 (1)
RM-377 (2)	RSWI-5 (1)
RM-379 (1)	RSWI-6 (1)

3 Chief of Naval Operations
- OP-55 (1)
- OP-72 (1)
- Operations Evaluation Group (1)

1 Air Development Squadron 5, China Lake (Conventional Weapons Project Officer)

1 Naval Air Engineering Facility (SI), Naval Air Engineering Center, Philadelphia

1 Naval Air Test Center, Patuxent River

2 Naval Weapons Services Office

3 Air Proving Ground Center, Eglin Air Force Base
- Detachment 4, ASD (1)
- PGAPI (2)

1 Air University Library, Maxwell Air Force Base

10 Defense Documentation Center (TISIA-1)

2 Douglas Aircraft Company, Inc., Long Beach
- G. Ruyter (1)

1 Grumman Aircraft Engineering Corporation, Bethpage, N. Y.

1 Lockheed Aircraft Corporation, Burbank, Calif. (Aircraft Ordnance Group)

1 McDonnell Aircraft Corporation, St. Louis (Ordnance Division, V. M. Marti)

1 Vought Aeronautics, Dallas

NOTS CL 778 (1/64) 120