UNCLASSIFIED

AD 425651

DEFENSE DOCUMENTATION CENTER
FOR
SCIENTIFIC AND TECHNICAL INFORMATION

CAMERON STATION, ALEXANDRIA, VIRGINIA

UNCLASSIFIED

NOTICE: When government or other drawings, specifications or other data are used for any purpose other than in connection with a definitely related government procurement operation, the U. S. Government thereby incurs no responsibility, nor any obligation whatsoever; and the fact that the Government may have formulated, furnished, or in any way supplied the said drawings, specifications, or other data is not to be regarded by implication or otherwise as in any manner licensing the holder or any other person or corporation, or conveying any rights or permission to manufacture, use or sell any patented invention that may in any way be related thereto.

CATALOGED BY DDC
AS AD No. 425651

VET. TES MEN NOV. TA- TUM

DEI VIGET

SUB NUMINE

DDC
DEC 17 1963
TISIA A

PRINCETON UNIVERSITY

DEPARTMENT OF AERONAUTICAL ENGINEERING

DEPARTMENT OF THE AIR FORCE
AIR FORCE OFFICE OF SCIENTIFIC RESEARCH
PROPULSION RESEARCH DIVISION

Contract AF-AFOSR-62-91

RESEARCH ON SOLID PROPELLANT IGNITABILITY AND IGNITER CHARACTERISTICS

Final Technical Report

1 October 1961 to 30 September 1962

Aeronautical Engineering Report No. 662

Prepared by: Edwin H. Grant, Jr.
Lieutenant, USN
Navy Graduate Student

and: Joseph Wenograd
Research Associate

Approved by: Martin Summerfield
Principal Investigator

Reproduction, translation, publication, use and disposal in whole or in part by or for the United States Government is permitted.

31 October 1963

Guggenheim Laboratories for the Aerospace Propulsion Sciences
Department of Aeronautical Engineering
PRINCETON UNIVERSITY
Princeton, New Jersey

The contents of this report have been submitted in partial fulfillment of the requirements for the degree of Master of Science in Engineering from Princeton University, 1963.

ACKNOWLEDGEMENTS

I would like to take this opportunity to thank the many people who helped to make this research possible.

In particular, I would like to express my gratitude and thanks to Professor Martin Summerfield for his guidance and advice in my particular field of research and to Dr. Joseph Wenograd for the many hours of discussion he devoted to this study and for his help in the technical aspects associated with the project.

I would like to thank Lt. R. W. Lancaster for acquainting me with the research he pursued on the subject before his departure from the University. Thanks are also due to Mr. Clarke E. Hermance for his discussions of theory and problems connected with the investigation. In addition, I wish to express my deepest gratitude to Mr. Chris Felsheim for his continuous efforts in the preparation of the propellant and in the technical aid required in firing the rocket motor and maintaining the system, and also to Dr. Kimball P. Hall for his advice on the processing of solid propellants.

I want to express my appreciation to Mr. Howard F. Edwards for procurement of supplies and to Mr. Keith Donaldson for the effort put into the photographic reproductions for this paper. I also wish to acknowledge the assistance of Mr. Tony Poli and the other members of the Design Group for figures and other necessary material associated with layout and design and to thank Miss Victoria Simpson for the clerical aid and preparation of this thesis.

ABSTRACT

The purpose of this research was to study the ignition of composite solid propellants in a small rocket motor. Hot gaseous products from a small gas-fed pyrogen-type igniter supplied a convective ignition stimulus to the internal surface of a thin-webbed, cylindrical solid propellant grain. The gas rocket igniter is a valuable tool for investigating the essential nature of the ignition process because it offers a wide range of controllable parameters such as heat transfer, chemical reactivity of the igniting gas, flame temperature, mass flow, chamber pressure and solid propellant composition. The results of this study are expected to contribute to an understanding of the overall propellant ignition process and, thus, to lead to the development of improved igniter design criteria.

Many earlier studies of the solid propellant ignition processes centered on the theory that ignition was due to chemical heat generation in the solid phase. In most instances, as in the case of this research, the interval between the commencement of heating and the subsequent ignition of the solid propellant sample was measured. Generally, the ignition delay was found to decrease with increasing pressure and increasing reactivity in the surrounding atmosphere.

Initial experiments were made using two different composite solid propellant compositions and stoichiometric methane-oxygen flames. Values of ignition delay time, ranged from 3 to 50 milliseconds depending upon the mass velocity of the igniting gas. In another series of studies heat flux was held constant, and the pressure and oxygen concentration in the flame or test gas was varied systematically.

The presence of oxygen (0 to 75 percent by weight) and increased pressure (35 to 110 psia) depressed ignition delay time as much as 90% at high oxygen concentrations. Measurements of ignition delay ranging from 2 to 37 milliseconds were made for one composite solid propellant composition. These results corroborate the importance of gas phase properties in influencing propellant ignition delay.

TABLE OF CONTENTS

		Page
TITLE PAGE		i
ACKNOWLEDGEMENTS		ii
ABSTRACT		iii
TABLE OF CONTENTS		v
LIST OF TABLES		vii
LIST OF FIGURES		viii
CHAPTER I	INTRODUCTION	1
CHAPTER II	THE THEORIES OF SOLID PROPELLANT IGNITION	5
	A. Solid Phase Ignition Theory	5
	B. Gas Phase Ignition Theory	8
CHAPTER III	EXPERIMENTAL APPARATUS AND INSTRUMENTATION	11
	A. Introduction	11
	B. The Solid Propellant Motor	12
	C. The Gas Rocket Combustion Chamber	13
	D. The Gas Rocket Injector	13
	E. Accessory Units	14
	F. The Gas Feed System	15
	G. Instrumentation	15
CHAPTER IV	CONTROLLABLE IGNITION PARAMETERS	17
	A. Heat Transfer	17
	B. Chemical Reactivity of the Igniting Gas	18
	C. Flame Temperature	19
	D. Mass Flow	20
	E. Dummy Chamber Pressure	21
	F. Solid Propellant Composition	21
CHAPTER V	EXPERIMENTAL RESULTS	22
	A. Stoichiometric Methane-Oxygen Flames	22
	B. Flames with Excess Oxygen	22
	C. Flames with Excess Fuel	23
CHAPTER VI	DISCUSSION AND CONCLUSIONS	24

TABLE OF CONTENTS-contd.

		Page
REFERENCES		26
APPENDIX A	PROPELLANT AND INHIBITOR COMPOSITIONS	A-1
B	PREPARATION OF SOLID PROPELLANT GRAIN	B-1
C	COMMERCIAL EQUIPMENT, COMBUSTIBLE COMPONENTS AND MATERIALS	C-1
TABLES		
FIGURES		

LIST OF TABLES

I Ignition Delay Measurements for $CH_4 + 1.88\ O_2$ Flames

II Ignition Delay Measurements for $CH_4 + 9.5\ [x\ O_2 + (1-x)\ N_2]$ Flames

III Ignition Delay Measurements for $CH_4 + 0.905\ O_2$ Flames

IV List of Combustion Products

V Oxygen Concentrations in the Flame Gas for Various Source Gases and Dummy Chamber Pressures

LIST OF FIGURES

1. Rocket Motor for Study of Gaseous Ignition of Solid Propellant
2. Interpretation of an Idealized Ignition Record
3. Exploded View of Motor
4. View of Test Apparatus
5. Flow Circuits for Gaseous Combustibles and Transducer Cooling Water
6. Circuit for Pressure Gauge Instrumentation
7. Calibration of Transducer #11080 at 65 psig Water Pressure
8. Recorded Pressure-Time Traces for Observed Dummy Chamber Pressure and Ignition Delay Measurements
9. Percent Oxygen in Flame Gas for $CH_4 + 9.5\ [x\ O_2 + (1-x)\ N_2]$
10. Pressure Effect on Adiabatic Flame Temperature for $CH_4 + 2\ O_2$ Flames
11. Pressure Effect on Adiabatic Flame Temperature for $CH_4 + 9.5\ [x\ O_2 + (1-x)\ N_2]$ Flames
12. Adiabatic Flame Temperatures for $CH_4 + x\ O_2$ Flames
13. Ignition Delay versus Dummy Chamber Pressure for Constant Igniter Composition, $CH_4 + 1.88\ O_2$
14. Ignition Rocket Motor Experiments on Composite Propellants
15. Exploded View of a Solid Propellant Mold
16. Solid Propellant Casting Rig
17. Stages of Preparation of a Solid Propellant Grain

CHAPTER I

INTRODUCTION

In recent years solid propellant rockets have become an integral part of the national defense and space exploration programs. The current use for military applications is the result of their superior reliability, storage, and readiness compared to those of liquid propellant rockets of similar capabilities (1). To provide guidelines for the future development of large solid propellant systems, each aspect of rocket development should be examined for ways and means of improving rocket performance and minimizing the repetitive test requirements needed for producing a practical device. The ignition process is perhaps the most uncertain area in the solid propellant field. Because the overall ignition process involves a sequence of complex events, e.g. heating of the propellant surface by dispersed combustion products, initiation, and flame spreading, an understanding of this phenomenon is a vital link in the development of engineering practices which will lead to safe, dependable, and positive activation of modern rocket systems.

Although rocket design technology is at a relatively advanced level, there are few concrete rules by which an engineer can design an ignition system for a solid propellant rocket engine. Fundamental equations and experimental correlations with theory are available for the calculation of most of the major design parameters for a specific propulsion unit. However, in each rocket development project, an acceptable ignition has been attained only by a combination of engineering, art and trial-and-error, with research often taking a minor role. As a result, the successful accomplishments of one program are difficult to apply to the next development project. Therefore, it appears that a more practical goal of an applied ignition research would be to examine more closely the repetitive concepts of the ignition process needed to minimize the lead time for future igniter development, to minimize the mass and volume of the system, and to maximize the reliability

of ignition using well oriented and properly constituted techniques (3).

The present designs of ignition systems are based on empirical approaches and past performances. The basic rules are limited to those obtained from simple systems and compositions. Yet a careful examination of the scientific knowledge of combustion, heat transfer, fluid dynamics and chemistry relevant to the ignition phenomenon gives an excellent basis for the conclusion that either a rational design procedure or a universal igniter may be a very long time in coming. Thus, the realistic approach is to examine the more reasonable requirements applicable to each rocket design. In general, a correctly designed ignition system should result in: (1) reproducible ignition delays; (2) controlled chamber pressure during ignition; (3) suitable ignition of aged propellants; (4) suitable low and high temperature ignition without overpressurization; and (5) a compact, serviceable and easily activated unit capable of withstanding the same conditioning as that of the rocket engine. Because the missions, size, and grain configurations of solid propellant rockets vary, many types of igniters have been developed capable of producing a sufficiently high level of surface temperature to stimulate ignition (4).

It is apparent that, during the ignition, the surface of the propellant grain is subjected simultaneously to a complicated combination of heat sources. Energy may be supplied by a convective, conductive, and radiative heat transfer as well as by attack from active chemical species released during the burning of the igniter charge. More specifically in a practical motor, hot refractory particles and metallic vapors may also cause ignition by impinging or condensing on the surface. This complexity of the energy considerations has led to various qualitative methods of obtaining an "ignitability factor" as a measure of a propellant's susceptibility to ignition. In one case, the "factor" was based on the reciprocal of the weight of the igniter powder required to ignite a test sample of a propellant in a closed bomb under constant and reproducible

conditions. In an attempt to give more validity to the evaluation, a standard test vehicle and operating technique has been proposed (5). However, it appears that the ignitability and not the mechanics of propellant ignition is the object, although certain refinements in holding the propellant and packaging the igniter charge have been adapted to existing strand burner equipment (6).

Early studies of the ignition of solid propellants postulated that ignition is caused by a runaway chemical reaction in the solid phase resulting from the stimulated interaction of the oxidizer and fuel components of the propellant. Several mathematical analyses were fully developed based on this physical model, leading to an expression for the dependency of the ignition time lag on the physicochemical properties of the propellant and the thermal exposure conditions. The most prominent analysis was presented by Hicks (7).

Several experimental studies were made employing a single mode of heat transfer. These investigations carried out at the University of Michigan, University of Utah, Princeton University, Stanford Research Institute, etc., consisted of varying one or more of the following factors: rate of conductive, convective, and radiative input to the exposed propellant surface and the temperature, pressure, and/or chemical reactivity of the surrounding atmosphere. The interval between the commencement of heating and the subsequent ignition of the propellant sample was measured (8, 9, 10, 11, 12 and 13). Generally, the ignition delay was found to decrease with an increasing rate of energy input, increasing pressure, and increasing reactivity of the surrounding atmosphere. These findings have led to the development of a new theory which focuses attention on the gas phase nature of the ignition reaction (13 and 14).

These general observations when substantiated in more controlled experimental situations would aid the development of a suitable theory for solid propellant ignition.

OBJECT OF THIS PROGRAM

An unfortunate limitation of most of the previous experiments were their failure to vary the gas phase properties over wide limits while simulating rocket motor ignition conditions. An experiment designed to elucidate the effects gas phase properties in ignitions similar to those which occur in rocket motors should satisfy the following requirements:

a) the total ignition time should be very small (several milliseconds and less)
b) the heat flux should be high
c) the gas temperature should be very high (otherwise a gas phase delay might be introduced which does not necessarily exist in practical situations)
d) pressure should be varied over a wide range, including near atmospheric pressures.

In order to meet this set of requirements a gas fed igniter system was designed and applied to the study of solid propellant ignition. In this system product gases from a methane-oxygen-nitrogen (diluent) flame are brought into contact with a solid propellant surface. This report contains a description of this system, a discussion of its properties and the result of its application to the study of composite solid propellant ignition.

CHAPTER II

THE THEORIES OF SOLID PROPELLANT IGNITION

A. Solid Phase Ignition Theory

Little was known of the mechanics of solid propellant ignition prior to 1950, other than the general principle that sustained heat causes ignition. Recently, however, several investigations were carried out in which test samples were exposed to various modes and selected amounts of heat input in order to obtain measured ignition delays. It was proposed that the ignition takes place when the surface temperature reaches a level high enough to stimulate a critical rate of heat generation in the solid phase. Although correlations have been made with limited success, the physical model has yet to be experimentally verified. This is most obvious in the inability of this model to incorporate the existence of a positive reduction of ignition time lag with increasing oxygen concentration and pressure in the surrounding test gas.

The partial differential equation describing one-dimensional heat flow in a homogeneous medium is the Fourier equation:

$$\rho C_p \frac{\partial T}{\partial t} = K \frac{\partial^2 T}{\partial x^2} + Q \qquad [1]$$

in which T [x, t] is the temperature at any point in the medium; C_p, K, and Q are the heat capacity, thermal conductivity, and heat of reaction per unit volume. Depending on the heat release rate assumed as a function of T, the mathematical complexity varies, resulting in analytic solutions for a variety of boundary conditions.

The most direct approach to the problem has been to neglect the heat generation term altogether so that the classical solutions to the equations can be employed (8). Altman and Grant assumed that the energy balance for ignition is determined by the rate constants and heat release of the particular exothermic reaction leading to combustion. This led to the term, ignition temperature, which

describes the above property and depends on well-defined boundary conditions set for the experiments. By employing an electrically-heated wire, a composite mixture of ammonium perchlorate, NH_4ClO_4, with a fuel binder was ignited. The ignition terms were then correlated by a mathematical solution to the Fourier equation with Q = 0, incorporating the effect of ignition temperature. It was further assumed that upon reaching the ignition temperature, the exothermic reactions leading to ignition occurred in a narrow temperature band, resulting in a discontinuity. This presumption was based on the fact that the actual time of runaway of temperature to complete ignition was much less than the time required to bring the propellant surface up to the ignition temperature. T_i was found to be about 390° C over the range of 1 to 10 sec. No attempt was made to vary the pressure, temperature, or reactivity of the surrounding atmosphere.

If Q is assumed to be a linear function of T, a relatively straightforward mathematical approach gives solutions for numerous boundary conditions (17 and 18). However, the more probable expression for the heat release term is one in which the dependency of chemical heat release on temperature is exponential, the Arrhenius equation, most frequently written as:

$$Q \sim e^{-E/RT}$$

where E , the activation energy, is constant for a particular reaction, and R is the universal gas constant. Numerical solutions to equation [1] were made by Hicks (7), for a wholly thermal zero order reaction with no consumption or diffusion of material. with boundary conditions:

$$T = T_0 \; ; \; x \to \infty \qquad \text{(IN THE SOLID)}$$

$$-\lambda_p \frac{\partial T}{\partial x} = h_c (T_G - T_s) \; ; \; x = 0 \qquad \text{(AT THE SURFACE)}$$

and heat release defined as:

$$Q = q A e^{-E/RT}$$

Analytical solutions obtained for the case where Q=0 were compared with the numerical solutions. It was found that a reasonable approximation to the ignition log could be made by calculating the time required to reach a surface temperature such that the heat production Q was a significant fraction of the externally applied heat flux.

This mathematical agreement was regarded as justification for neglecting the exponential term in the integration of the differential equation. It was suggested that further theoretical investigation be conducted in which the diffusion of reactive material and the flow of heat be considered. However, several other studies attempted to predict or correlate their findings on this model using independent modes of heat transfer.

A modification of the Hicks treatment was employed by Ryan et al. (12) in correlating convective heat flux-ignition time results obtained from the ignition of several propellants in a shock tunnel. The state of the gas was varied from 150/350 psia, and 1200 to 1800° K. The flow velocity across the sample surface varied from 150 to 350 feet/sec. A successful comparison was found if the oxygen content of the test gas was held constant during a series of tests. The advantage of this technique lay in the ability to produce a controlled convective heating of a propellant sample in a flow at preselected velocity. However, they are unable to explain the decrease of ignition time in the presence of oxygen within the framework of the solid phase ignition theory. The ignition delay times were in the range of 5 to 45 msec. for a computed surface temperature at ignition on the order of 600° K. No preliminary chemical reaction was assumed.

The ignition of a double-base propellant in a non-radiating stream of hot gas at atmospheric pressures was examined in another study (9). Gas temperature, velocity and composition

were varied. However, correlation of the data was accomplished by means of empirical dimensional analysis with poorly defined boundary conditions. The most significant departure from these results again centered on the depression of the ignition time with increasing oxygen content over the entire range of gas compositions, temperatures, and flow rates. At the same time, it was noted that grains decomposed completely without the appearance of a flame or that a flame first appeared at the fringe of the gas stream and flashed back to the grain.

Cook and Olsen have measured the relative reactivities of various rocket propellants (11). Heating was accomplished by hot, high pressure gases generating a hydrogen-oxygen detonation wave. Although the incipient ignition flame was veiled by the luminosity of the wave and the ignition time was crudely defined, the data obtained indicated that the ignition time lag was dependent on the percentage of oxygen in the surrounding atmosphere. It was also noted that partial burning occurred only with oxygen-deficient igniter gas, but never for the oxygen-rich mixtures where the propellant sample was either completely burned or showed no evidence of reaction. No analytical explanation of the resulting data was made.

It should be noted that the two investigations discussed above were conducted using composite propellants which are probably incapable of producing the high level of chemical heat generation required by the solid phase model (19). Double-base (nitrocellulose-nitroglycerin) propellants have been examined and found to fit more closely the imposed boundary conditions (20).

B. Gas Phase Ignition Theory

Evidence that the pressure and composition of the surrounding atmosphere strongly influences solid propellant ignition casts doubt on the general applicability of the solid

phase ignition model. Not only has the effect of oxygen in the surrounding gas failed to be incorporated in the theory, but there is sufficient theoretical and experimental evidence that the steady state flame is one in which the bulk of the heat release occurred in a gaseous reaction zone close to the propellant surface (21), (22), and (23). A group at Stanford Research Institute found further support for a gas phase theory as a result of ignition experiments using arc-image furnace techniques (24). It was also noted that radiative energy requirements were reduced when oxygen was added to the environment. These and more current studies using high speed motion pictures and a photocell sensing device for recording ignition delays obtained further qualitative results which showed that increased pressure, free oxygen in the surrounding atmosphere, and increased initial propellant temperature reduced the period required for ignition.

On the basis of the previous evidence pointing to a gaseous ignition, and from information obtained from concurrent ignition research as indicated above and at the University of Utah, the study of composite solid propellant ignition at Princeton University led to the development of a quantitative theory of gas phase ignition (14) and (15).

The gas phase ignition theory evolved originally from a study of propellant ignition caused by instantaneous exposure to conductive heating from a stagnant gas. This was accomplished by mounting the propellant in the end of a shock tube so that its exposed surface was flush with the end wall and the normal shock passing through the test gas reflected from the flush, flat surface. Heat, then, started to flow instantaneously into the propellant in a way which produced a step increase in the surface temperature. The ignition delay was recorded as the time from the moment of reflection to the first detection of light from the incipient flame.

It was assumed that the vaporized propellant decomposition products reacted in the gas phase very near the propellant surface generating heat. Independent evidence indicated that below 600° K, the fuel components vaporized much more rapidly than perchlorate crystals (25). Thus, immediately after the reflection of the shock, the gas near the surface started to cool, thereby propagating a "cold wave" upstream at a rate governed by heat conduction laws. At the same time fuel vapors propagated upstream according to the laws of mass diffusion. The presence of oxidizer crystal acted only as an obstruction to the fuel. It was then postulated that if the test gas contained oxygen, the first flame would result from the reaction of fuel vapor and the gaseous oxygen. A certain time delay was required for a sufficient quantity of fuel vapor to overtake the receding region at high temperature. If no oxygen were present in the test gas, a longer heating period or more intense heat would be required to vaporize the oxidizer and bring about ignition.

Other assumptions in the analysis included heat flow by pure conduction, no convection, constant gas density near the surface during "cooling" period, temperature distribution of test gas independent of fuel vapor diffusion, uniform pressure in the zone of interest, and an Arrhenius-type rate expression for the vaporization rate of the fuel.

The quantitative treatment of the model described above (14) and (15) contained some assumption which serve to severely limit its applicability. However, recent theoretical research in this laboratory has been successful in describing the properties of this type of ignition (26).

Another physical process could account for some of the effects observed in solid propellant ignition studies. The effect of oxygen on ignition delay could be explained on the basis of a heterogeneous, exothermic attack of environmental oxygen on the propellant fuel.

CHAPTER III

EXPERIMENTAL APPARATUS AND INSTRUMENTATION

A. Introduction

The configuration of the test apparatus for the following studies was designed and constructed by Lt. R. W. Lancaster, USN, under contract USAF-OSR AF 49(638)-960 and fully developed in AFOSR TN 836 (16). However, a brief description of the equipment is necessary in order to explain the functional aspects of the research.

The basic unit resembles a typical practical rocket motor ignited by a pyrogen-type igniter (Figure 1). Hot gases are generated by a "gaseous" pyrogen and emerge through a nozzle located at the forward end of a solid propellant rocket chamber. The gases then pass through the core, the internal surface of the propellant grain, and exit through a second nozzle downstream.

The gas rocket burns methane and oxygen with variable amounts of nitrogen as a diluent. The solid propellant is fabricated in the form of a hollow, cylindrical grain and case-bonded to a thin-walled stainless steel tube. The solid propellant compositions are listed in Appendix A. The processing procedure and preparation of the grains are described in Appendix B. The finished propellant grain is inserted in the motor casing. The ends are inhibited to restrict the burning to the internal surface.

The mass flow rate of gas through the two rocket chambers is controlled by means of an impingement injector containing critical-flow (choked) orifices for the fuel and oxidizer systems. The fuel gases are supplied through one-half inch stainless steel tubing from pressurized A-type bottles and controlled by pressure regulators and quick opening pneumatic valves.

A strain gauge pressure transducer senses the pressure in the solid propellant rocket chamber. The signal is amplified and then recorded by a direct wiring oscillograph. The measurements of observed chamber pressure and ignition time lag are read from linagraph direct-print recording paper.

The overall ignition delay of the system consists of two principle parts; first the time required for the gaseous rocket to ignite and fill the solid propellant chamber with a flowing stream of test gas and second, the time required for the surface of the solid propellant to respond to the convective heat source. An idealized sketch of an ignition record is shown in Figure 2. When the methane and oxidizer are injected into the chamber and ignited, the pressure of the solid propellant chamber rises sharply to the "dummy" chamber pressure level where it remains until the grain ignites. The interval between the ignition of the gas rocket and the ignition of the solid propellant is defined as the ignition delay or ignition time lag. It should be pointed out that this ignition delay does not represent the delay until the first appearance of flame as would be detected by a photocell, but is the delay until a pressure rise is detected. The latter delay might be somewhat longer than the former. At the time involved in this study this difference is probably unimportant. The purpose of these investigations is to measure and record ignition time for solid propellants with preselected temperature, pressure, mass flow, and chemical reactivity of the test gas.

B. The Solid Propellant Motor

The principal design criterion for the motor was a minimum L* in order to provide a minimum rise time to the operating dummy chamber pressure before solid propellant ignition. This requirement led to the incorporation of a large chamber length to cavity diameter ratio. By selecting an exit nozzle diameter of

0.25 inches and an initial burning surface to throat area ratio of 180, the exposed surface was found to be 8.84 square inches and the grain length, 3.75 inches, for a port diameter of 0.75 inch. The actual propellant grain case was 4 inches long. However, the difference is taken up by inhibiting the ends of the grain as described in Appendix B. The thickness of the web is 0.25 inches and the weight of the grain is 88 grams.

The aft end of the solid propellant chamber, the pressure measurement section, contained one strain gauge pressure transducer and a blowout connection fitted with an 825 psi burst disk.

The piping is filled with Fuller RL 3700 chromate compound to protect the burst disk from the hot gases. The transducer is recessed slightly and covered with high vacuum grease to prevent abrasion by solid particles and chemical corrosion.

C. The Gas Rocket Combustion Chamber

The igniter combustion chamber has a diameter of 1.25 inches and is 2.0 inches long. It contains two openings for the spark plugs, 180° apart, and openings for a blowout connection and a suction line for evacuating the entire rocket. Originally, another pressure transducer was installed in this chamber to measure the pressure drop across the gas rocket nozzle. It was removed after the pressure drop was found to be negligible during firing.

D. The Gas Rocket Injector

Two separate impingement injectors were fabricated, one to be used for fuel to oxidizer ratios of 1 to 2-4, and

the other for F/O of 1 to 17-19. Each was designed to be critical until after the ignition of the solid propellant grain. Four pairs of orifices are spaced at 90° intervals at the center of the injector face. The angles of the oxidizer and fuel streams were fixed by the requirement for axial flow after impingement. An exploded view of the motor is shown in Figure 3.

E. Accessory Units

The ignition of the gas rocket is accomplished by two modified Champion N-5 spark plugs. The side electrode was removed to allow a large spark gap and prevent welding of the electrodes. The excitation energy is supplied by a 110 Volt AC neon transformer in which the secondary is grounded providing 7500 Volts to each spark plug. A continuous spark system was necessary in order to induce ignition as soon as the combustible mixture entered the combustion chamber. The spark plugs are located axially, one-half inch from the impingement points of the gaseous propellants.

The blowout connections are considered necessary to protect the motor and instrumentation from excessive overpressure. The selection of an 825 psi burst disk for the solid propellant chamber is based on a safety factor of 2 for the highest operating pressures expected during operation. The second connection is a backup in the event of an explosion as the result of a cracked or ruptured grain. The assembled test unit is shown in Figure 4.

The components of the motor exposed to high temperatures are made of commercial copper which is an excellent heat sink. The injector is made of brass for its machining qualities, and the solid propellant section is stainless steel. The entire system was initially tested hydrostatically at 3,000 psi.

F. The Gas Feed System

The gas feed system is constructed of one-half inch stainless steel tubing through which the methane and oxidizer are fed from A-type bottles stored adjacent to the test cell. A diagram of the system is shown in Figure 5. Two Marotta pneumatic actuated on-off valves are placed in the feed lines close to the injector to provide instantaneous flow of fuel and oxidizer to the injector. The line pressure is controlled by two Grove 0-300 lb. pressure regulators and measured by an 0-500 psi Heise gauge for the oxidizer and one 0-600 psi gauge for methane from tanks located immediately upstream of the on-off valves. Check valves are placed in the feed lines between the injector and Marotta valves to prevent any reverse flow and subsequent contamination of the control valves and feed system. A nitrogen purge system is installed to clear the motor of any combustible gases before firing and to eliminate the products of the solid propellant combustion after a successful ignition.

G. Instrumentation

The instrumentation system provides the measurement and recording of the pressure history in the solid propellant combustion chamber by use of a Minneapolis-Honeywell Visicorder, 906-B, direct wiring oscillograph. The sensing instrument is a Dynisco water-cooled strain gauge pressure transducer. The signal is amplified by an AccuData III Wide Band Differential D-C amplifier. A strain gauge balance and negative bias to the amplifier are included in the system to permit greater amplification of the strain gauge input, to offset the galvanometer in the negative direction, and to prevent saturation of the amplifier during the burning of a solid propellant grain at high chamber pressures. The galvanometer is fluid-damped with a flat frequency response of 0-2000 cycles per second. A Minneapolis-Honeywell timing unit is used to obtain accurate time marks.

It is a self-contained multivibrator-oscillator which supplies sharp pulses to two 3300 cps natural frequency galvanometers at intervals of 0.01, 0.1 or 1.0 seconds. The traces produced appear as vertical lines on the recording paper at the preselected level. The distance between these traces is a function of feed out speed of the visicorder. A circuit diagram of the system is shown in Figure 6. The system was calibrated by supplying regulated pressure into the sealed rocket motor and recording the galvanometer deflection (Figure 7).

Samples of a series of test runs is shown in Figure 8. The minimum reliable readings were considered to be on the order of 4 milliseconds.

A list of equipment and materials used in the construction of the test apparatus and in the conduct of tests are listed in Appendix C and in Reference 16.

CHAPTER IV

CONTROLLABLE IGNITION PARAMETERS

Since the gas rocket ignition system is inherently flexible, it is possible to employ a wide range of independent ignition parameters. These are: (1) heat transfer, (2) the chemical reactivity or composition of the test gas, (3) the flame temperature of the igniting gases, (4) the mass flow of the igniting gases, (5) the dummy chamber pressure, and (6) the solid propellant composition. Each of these factors may be fixed, either singly or as a combination permitting the study and evaluation of a particular effect on ignition. In order to clarify the specific influence selected in this research, each parameter is discussed in the following sections. The thermodynamic properties of the igniter gas of particular interest are the adiabatic flame temperature, density, pressure and molecular weight.

A. Heat Transfer

The heat flux in a convective situation is expressed by the relationship:

$$\dot{q} = h_c \left(T_G - T_s \right) \qquad [2]$$

where h_c is the convective heat transfer coefficient, or film coefficient; T_g is the temperature of the hot gases; and $\bar{T}_W$ is the mean temperature of the solid propellant surface during the ignition delay period. If the rise in temperature at the surface during the transient heating period is small in comparison with the difference between T_g and $\bar{T}_W$, then the heat flux is primarily a function of h_c for constant igniter gas composition, and a constant initial solid propellant temperature. For turbulent flow of a hot fluid through a cold

tube, h_c is expressed as a function of fluid properties and the characteristic dimension of the channel by the Chilton-Colburn equation:

$$\frac{Dh_c}{k} = 0.023\left(\frac{DG}{\mu}\right)^{0.8}\left(\frac{\mu C_p}{k}\right)^{1/3}$$

in which D is the effective diameter of the flow channel; K is the thermal conductivity of the hot gases; G is the mass velocity, μ is the viscosity, and C_p the specific heat of the gases. For constant igniter composition and tube or port diameter, the heat transfer coefficient is reduced to a simple expression:

$$h_c = \text{CONSTANT}\,(G)^{0.8} \qquad [3]$$

Although the igniter composition is varied as described in a later section of this report, the characteristic properties at a constant flame temperature are considered to change negligibly for the reaction selected. Since heat flux is not actually measured and the values of μ , k and C_p are not known for the gas mixtures encountered at elevated temperatures, a relative heat flux $\dot{q}/\dot{q}_o$ may be found by varying G , the mass flow parameter. In the same manner, approximately constant heat transfer may be assumed by holding the mass flow constant.

B. Chemical Reactivity of the Igniting Gas

Mixtures of methane with oxygen and in some cases nitrogen diluent were chosen for specific purposes. The three stoichiometric schemes used are:

$$CH_4 + 1.88\ O_2 \qquad \text{(a)}$$

$$CH_4 + 9.5\ [\ x\ O_2 + (1-x)\ N_2] \qquad \text{(b)}$$

$$CH_4 + 0.905\ O_2 \qquad \text{(c)}$$

$CH_4 + 1.88\ O_2$ is the stoichiometric reaction of methane whereas reaction (b) is the fuel-lean condition for which the standard composition of air would permit the complete combustion of methane. The third reaction represents the fuel-rich situation at the same flame temperature as that obtained for fuel-lean combustion.

A computer analysis was obtained for reactions (a) and (b) from United Aircraft Corporation giving enthalpy, entropy, T_f, C_p, γ, molecular weight, density, and product concentrations for a pressure range of 50-300 psia. Since one of the primary objectives of this research is to investigate the effect of free oxygen on ignition, the concentration of oxygen in the test gas was obtained by burning methane for lean O/F ratios, and varying the mole fraction of oxygen in the igniter oxidizer composition (Figure 9). A list of the flame constituents is given in Table IV.

C. Flame Temperature

The flame temperature of reactions (a) and (b) were obtained from the computer solution. The effect of pressure is shown in Figures 10 and 11. It was found that the gas temperature remained nearly constant for the fuel-lean case regardless of the N_2/O_2 ratio due to the relatively equal heat capacities of the two components.

In order to have a comparative basis between a test gas containing oxygen and one free of an oxidizing constituent, Hottel Charts were used to determine the oxygen fuel ratio required to generate the same adiabatic flame temperature as that obtained in the fuel-lean case (Figure 12). Two significant effects are noted: the relative insensitivity of flame temperature to a change in pressure surrounding the reaction and the dependence of the temperature on the oxygen-fuel ratio. The latter may be

controlled by careful regulation of the igniter flow rates and by frequent examination of the orifice diameters in the injector.

D. Mass Flow

The mass flow of gas through the rocket system is limited by the requirement that the orifices in the impingement injector remain choked at all times prior to ignition of the solid propellant grain and that the pressure drop across the orifices be kept to a minimum. The first requirement is accomplished by maintaining a static feed line pressure 1.6 times greater than the dummy chamber pressure obtained after the ignition of the gaseous igniter. The second requirement is satisfied by designing an orifice area in the injector much smaller than the cross-section area of the feed lines. When the oxidizer and fuel components are flowing, the static pressure is then approximately equal to the total pressure. By regulating the feed line pressure, the mass flow rate is controlled.

The calculations for the feed line pressure are based on the mass ratio specified for the appropriate reaction and the total mass flow rate for a particular throat area and chamber pressure according to:

$$P_L = \frac{\dot{m}_i \sqrt{RT_i}}{\Gamma A_i \sqrt{g}}$$

where: $\dot{m}_L$ is mass flow, and A_i is the total orifice area for the igniter component; in the same manner, chamber pressure is estimated for a selected mass flow and exit nozzle area after gaseous rocket ignition. It is noted that the gas rocket nozzle was so designed as to remain unchoked, thus permitting the same dummy chamber pressure to exist in the entire test motor.

E. Dummy Chamber Pressure

The dummy chamber pressure for any given mass flow rate or any combination of mass flow rate and desired chamber pressure is fixed by the throat area of the solid propellant exhaust nozzle. This flexibility permits the variation of pressure in the atmosphere at the solid propellant surface while holding heat transfer constant [Equation 4].

F. Solid Propellant Composition

The selection of a composite propellant composition for study was based on the amount of information available from previous ignition studies and its processing, machining, and safety features (14), (15), (16), (23), (27), and (28). P-13 (Ammonium Perchlorate with Polystyrene Resin binder) was initially chosen (16). However, because cracks developed during the curing phase, a PBAA composite propellant possessing similar characteristics was adopted (29). The propellant constituents are available commercially and the manufacturing procedure of the test grain is not altered appreciably by the selection of a variety of solid propellant binders and compositions (Appendices A and C).

The three types employed in this investigation are ammonium perchlorate (AP) based propellants using polystyrene resin (P-13) or polybutadiene-acrylic acid co-polymer (PBAA) as the principal binders. The selection of the oxidizer (AP) to fuel or binder ratio is based on the ease of mixing and the oxidizer effect to be studied.

Once the above parameters have been established, a wide range of exposure conditions are available by simple selection of the composition of the gas mixture, the mass flow rate, the exit nozzle diameter and the solid propellant type. The port diameter was held constant for the entire investigation.

CHAPTER V

EXPERIMENTAL RESULTS

The study was conducted in three separate phases based on the three schemes of methane combustion described in the previous chapter. Each phase was governed by a specific combination of controllable ignition parameters depending on the effect desired. A series of one to four runs were made for a specified condition and an arithmetic mean of the observed dummy chamber pressure and time was used in plotting the data. The pressure levels described in the figures are mean values and rounded off to the nearest whole number.

A. $CH_4 + 1.88\ O_2$ - Stoichiometric Methane-Oxygen Flames

In these experiments the rocket configuration was held constant and the exit nozzle diameter was 0.25 inch. This meant that the mass flow was proportional to the pressure. Thus, in effect, the propellants are ignited over a range of heat transfer rates. The experimental results for this series are tabulated in Table I and plotted in Figure 13 for two different solid propellants. The plots show a linear relation between ignition delay and dummy chamber pressure when plotted logarithmically. This indicates a constant value of surface temperature of ignition as discussed by Lancaster (16).

B. $CH_4 + 9.5\ [x\ O_2 + (1 - x)\ N_2]$ - Flames with Excess Oxygen

This series of tests illustrate the effect of oxygen in the surrounding atmosphere on ignition delay for a constant heat flux (i.e., constant flame temperature T_f - 2250° K. and mass flow, m = 0.0294 lb/sec) at various dummy chamber pressures and test gas reactivities for one solid propellant composition. Since the injector orifices were to be critical

at all times and excessive pressures in the rocket chamber were to be avoided, four different exhaust nozzles were selected which gave four different pressure levels in the solid propellant chamber for a constant mass flow. (Except for an additional change in the injector in order to maintain axial flow of the gas rocket propellants, the configuration was held constant as in the previous runs.) The pressure levels are approximately 35, 60, 80 and 110 psia. To vary the oxygen in the test chamber prior to solid propellant ignition, igniter (source) oxidizer compositions of 100, 70, 55, 40 and 30 percent oxygen were selected which resulted in the oxygen concentrations in the flame gas shown in Figure 9. The results of each igniting gas-oxygen composition with the four chamber pressures are listed in Table II. A plot of ignition time lag versus percent oxygen in test gas is shown in Figure 14.

The results show that the oxygen concentration of the igniting gas has a strong influence on ignition delay, especially at the higher pressures. Moreover, at each of the oxygen concentrations considered, pressure strongly influences the ignition delay particularly at the higher oxygen concentrations. Since heat transfer rates are approximately constant in this entire series of experiments, each ignition time represents propellant ignition at a different surface temperature.

C. $CH_4 + 0.905\ O_2$ - Flames with Excess Fuel

The principal observation of this series is the residual effect of pressure on ignition delay in the absence of oxygen in the test atmosphere at the same pressure levels and the same relative heat flux selected in the previous tests. The data are recorded in Table III. A combined plot of ignition delay versus weight fraction of oxygen in the test gas at the various dummy chamber pressures for constant heat flux is shown in Figure 14.

CHAPTER VI

DISCUSSION AND CONCLUSIONS

The results of this study represent a positive demonstration of the effects of the ambient pressure and gas reactivity on the solid propellant ignition delay. These effects had been noted before, but never under such widely varied and controlled conditions as in the present case. The clear demonstration of these effects is of practical importance and should be considered in future theoretical treatments of solid propellant ignition. An important result of this study is the observation that pressure is an important factor controlling solid propellant ignition even when the igniting gases are inert. A further observation of interest is that the effect of oxygen weight fraction changes with pressure. Reference to Figure 14 shows that the oxygen effect is barely discernible at 35 psig; whereas, a five-fold variation of ignition time with oxygen weight fraction is noted at 110 psig. It was also noted that a threshold oxygen concentration was evident at each pressure below which the oxygen effect was unimportant.

In view of the ostensible constancy of the heat transfer rate to the propellant surface in all the experiments summarized in Figure 14, the widely stated presumption that ignition of a given propellant can be described solely by an ignition temperature is severely undermined. Thus, in the absence of exothermic surface reactions for which no conclusive evidence exists, in all the experiments in Figure 14, the surface temperature at a given time should be the same. However, it is seen that a twenty-fold variation in ignition time has been observed. Therefore, under varying oxygen concentration and pressure there is a drastic difference in the energy which must be imparted to a solid propellant surface to effect ignition. This observation can only be explained by a theoretical model which takes proper account of the gas phase participation in the ignition process.

In these experiments the propellant port area was maintained constant. In order to achieve constant mass flow it was necessary to change nozzle diameter and, thus, the throat to port area ratio. In the constant mass flow experiments this ratio varied between 0.21 and 0.55. Effectively then, there is a change in the flow velocity parallel to the propellant surface as the pressure is changed. Under some circumstances strong parallel flows can affect solid propellant ignition (9). It is possible that part of the observed change in ignition delay with changes in pressure level could be attributed to velocity variations. Although the effects of pressure and velocity cannot be separated unequivocally, the results in either case support the assumption of a gas phase ignition mechanism.

REFERENCES

1. Adelman, B. R., Keathley, A. C., "Reliability Aspects of Solid Propellant Rocket Engines", ARS Reprint No. 1043-60.

2. Stehling, K. R., "Landing on the Moon", Space/Aeronautics, February 1960, p. 42.

3. Preliminary Technical Recommendations for the Ignition Research Program of the Bureau of Naval Weapons for Fiscal Year 1962; submitted by U. S. Naval Ordnance Test Station, China Lake, California, July 21, 1961.

4. Rabern, J. W., "Systems for Ignition of Solid Propellants", ARS Reprint No. 977-59.

5. "Proceedings of the Third Meeting of the JANAF Ignitability Panel", held at Applied Physics Laboratory, Silver Springs, Maryland, June 19, 1959.

6. Bulletin of the Fourth JANAF AD HOC Ignitability Panel Meeting, held at the Olin Matheson Chemical Corporation, East Alton, Illinois, May 23-24, 1960.

7. Hicks, B. L., "Theory of Ignition Considered as a Thermal Reaction", Journal of Chemical Physics, Vol. 22, 1953, p. 414.

8. Altman, D. and Grant, A. F., "Thermal Theory of Solid Propellant Ignition by Hot Wires", Fourth Symposium on Combustion, 1953, Williams and Wilkins Company, Baltimore, Maryland, p. 158.

9. Churchill, S. W., Kruggel, R. W., and Brier, J. C., "Ignition of Solid Propellants by Forced Convection", A. I. Ch. E. Journal, December 1956, p. 568.

10. Beyer, R. B. and Fishman, N., "Solid Propellant Ignition Studies with High Flux Radiation Energy as a Thermal Source", Solid Propellant Rocket Research, Progress in Astronautics and Rocketry, ARS Series, Vol. I, 1960.

11. Cook, M. A. and Olsen, F. A., "Chemical Factors in Propellant Ignition", A. I. Ch. E. Journal, 1, 1955, p. 391.

12. Baer, A. D., Ryan, N. W. and Salt, D. L., "Fundamental Studies of Ignition by Means of a Shock Tube", Solid Propellant Rocket Research, Progress in Astronautics and Rocketry, ARS Series, Vol. I, 1960.

13. Summerfield, M. and McAlevy, R. F., III, "The Shock Tube as a Tool for Solid Propellant Ignition Research", Jet Propulsion, Vol. 28, No. 7, July 1958, p. 478.

14. McAlevy, R. F., III, Cowan, P. L. and Summerfield, M., "The Mechanism of Ignition of Composite Solid Propellants by Hot Gases", Solid Propellant Rocket Research, Progress in Astronautics and Rocketry, ARS Series, Vol. I, 1960.

15. McAlevy, R. F., III, "The Ignition Mechanism of Composite Solid Propellant", Ph.D. Thesis, Princeton University, June, 1961.

16. Lancaster, R. W., "Experimental Investigation of the Ignition Process of Solid Propellants in a Practical Motor Configuration", M.S.E. Thesis, Princeton University, May, 1961.

17. Jakob, M., "Heat Transfer", Vol. I, John Wiley & Sons, Inc., New York, 1949.

18. Carslow, H. S. and Jaeger, J. C., "Conduction of Heat in Solids", Oxford (Clarendon) Press, 1959.

19. Huggett, C., "Combustion of Solid Propellants", Princeton Series on High Speed Aerodynamics and Jet Propulsion, Vol. II, 1956, p. 567.

20. Crawford, B. L., Jr., Huggett, C. and McBrady, J. J., "Mechanism of the Burning of Double-Base Propellants", J. Phys. and Coll. Chem., Vol. 54, No. 6, June 1956, p. 854.

21. Rice, O. K., and Ginell, R., "The Theory of the Burning of Double-Base Rocket Powder", Journal of Physical and Colloid Chemistry, Vol. 54, No. 6, June 1950, p. 885.

22. Parr, R. G. and Crawford, B. L., "A Physical Theory of Burning of Double-Base Rocket Propellants", Journal of Physical and Colloid Chemistry, Vol. 54, No. 6, June 1950.

23. Summerfield, M., Sutherland, G. S., Webb, M. J., Taback, H. J. and Hall, K. P., "Burning of Ammonium Perchlorate Propellants", ARS Reprint No. 737-58, presented at the American Rocket Society's 13th Annual Meeting, New York, November 1958.

24. Fishman, N. and Hiester, N. K., "Measurement of Ignition Delay Time and a Mechanism for Ignition of Composite Propellants", JANAF Second Symposium on Solid Propellant Ignition, October 1956.

25. Chaiken, R. F. and Anderson, W. H., "The Role of Binder in Composite Propellant Combustion", paper presented at the 136th Meeting of the ACS, Symposium on Plastics and Elastomers in Rockets, Atlantic City, New Jersey, September 13-18, 1959.

26. Hermance, C. E., Shinnar, R. and Summerfield, M., "Ignition of an Evaporating Fuel in a Hot, Stagnant Gas Containing an Oxidizer". In process of publication.

27. Bastress, E. K., "Modifications of the Burning Rates of Ammonium Perchlorate Solid Propellants by Particle Size Control", Ph.D. Thesis, Princeton University, January 1961.

28. Grant, E. H., Hermance, C. E. and Hall, K. P., "Research on Solid Propellant Ignitability and Igniter Characteristics", Princeton University, Aeronautical Engineering Report No. 592, December, 1961.

APPENDIX A

PROPELLANT AND INHIBITOR COMPOSITIONS

All formulations were mixed and cast at the solid propellant processing facilities of the Aeronautical Engineering Department, Princeton University, Princeton, New Jersey.

Propellant: P-13: 80 BM

Ammonium Perchlorate (bimodal mix)	80.00%
Polystyrene Resin (Rohm and Haas P-13)	19.75%
Nuodex Cobalt	.10%
Lecithin B-60	.10%
Lupersol D.D.M.	.05%

Inhibitor for P-13: 80 BM

Polystyrene Resin (Rohm and Haas P-13)	96.618%
Nuodex Cobalt	.965%
Lecithin B-60	.965%
Lupersol D.D.M.	1.450%

Propellant: PBAA: 75 BM

Ammonium Perchlorate (bimodal mix)	75.00%
Polybutadiene-Acrylic Acid copolymer (PBAA 325)	21.40%
Epoxy Resin (Shell Epon 828)	3.60%

Propellant: PBAA: 80 BM

Ammonium Perchlorate (bimodal mix)	80.00%
Polybutadiene-Acrylic Acid copolymer (PBAA 325)	17.12%
Epoxy Resin (Shell Epon 828)	2.88%

Inhibitor for PBAA Propellants:

Polybutadiene-Acrylic Acid copolymer	65.00%
Epoxy Resin (Shell Epon 828)	20.00%
Talc	15.00%

APPENDIX B

PREPARATION OF SOLID PROPELLANT GRAIN

A standard processing method was used in weighing and mixing the propellant prior to casting (16) and (28). An exploded view of the solid propellant mold is shown in Figure 15. The stainless steel propellant grain case was inserted into the base of the mold and placed in a vacuum casting rig sufficiently large to hold twelve molds on the perimeter of the vibrating platform (Figure 16). A vacuum (3 cm. of Hg) was drawn on the system to aid in drawing the propellant into the feed line. The unique features of this rig include a vibrating table designed to aid in settling the propellant in the molds, a cold water circuit for cooling the vibrator motor, and a heated aluminum funnel to keep the propellant mixture fluid during casting. The propellant was placed in the funnel or hopper and fed through a curved pipe to the molds. A movable plunger, tipped with a rubber cork, controlled the rate of propellant feed. A narrow slit at the base of the feed line formed an easily controlled ribbon of propellant at the top of the mold. The vacuum, vibration, and ribbon flow were incorporated into the procedure to aid in the elimination of air bubbles.

After removal from the casting rig, the teflon mandrel was inserted in the mold. The mandrel tapered at one end was centered by the geometry of the base and cap (Figure 17a). The assembled mold was then placed in an electric oven at 80° C. for 24 hours to cure. Upon removal, the mandrel and caps were removed and the grain was allowed to cool to room temperature.

To prepare the ends of the grain for inhibiting, the grain was placed in a lathe, and the propellant machined

to a depth of 3/16" from the end of the stainless steel case (Figure 17b). A tapered teflon stopper was inserted in the case to prevent internal contamination of the grain and approximately 1/8" of inhibitor was applied (Figure 17c). After a twelve hour curing period in the oven, the stopper was removed, and the process repeated for the opposite end. Although the body of the inhibitor remained elastic and pliable, it was firmly bonded to the grain.

After a final cooling period at room temperature, the grains were wrapped in aluminum foil and stored in an air-tight glass jar containing silica gel. Just prior to firing the final stage of processing was completed. The grain core was enlarged on the lathe to 3/4" in two steps by the use of a counterbore. The first cut was made with 11/16" bore, the second with a 3/4" bore. The purpose of drilling the grain port to 3/4" rather than casting at the final diameter was to insure a uniform propellant surface and to eliminate any uneven distribution of fuel and oxidizer which might be formed at the contact surface of the mandrel during casting and curing (Figure 17d). The grains, now fully prepared for testing, were fitted with an O-ring seal at each end and inserted into the test motor (Figure 17e). The seals pressed the inhibitor against the propellant and created positive fixing of the grain in the solid propellant chamber.

APPENDIX C

COMMERCIAL EQUIPMENT, COMBUSTIBLE COMPONENTS AND MATERIALS

The complete list of original items are listed in Reference 16. Those requiring replacement or modification are listed below. All equipment not specifically mentioned was manufactured in the Machine Shop, Forrestal Research Center or contracted locally from materials listed in Section 3.

1. Equipment

Item	Manufacturer or Distributor	Use
Pressure Transducer PT-49AF-1M	Dynamic Instrument Co. Cambridge, Mass.	Chamber Pressure Measurement
Pressure Gauge 0-500 PSI	Heise Bourdon Tube Co. Newton, Mass.	Fuel Feed Pressure Measurement
Pressure Gauge US Gauge #1402 0-600 PSI	Truesdell Co. Princeton, N. J.	Oxidizer Feed Pressure Measurement
Safety Head and Rupture Disc	Black, Sivalls Bryson, Inc. Wayne, Pa.	Safety for Motor Over Pressure
Water Pump LABAW CO Model #3	LaBawco Pumps, Inc. Belle Mead, N. J.	Transducer Cooling
Check Valve (#224-A-STT)	Circle Seal Prod. Co.Inc. Philadelphia, Pa.	Prevent reverse flow of oxidizer and fuel feed systems
Pneumatic Valve Marotta PV-20-A	Marotta Valve Corp. Taylor, N. J.	Pneumatic Control Valves
Spark Plugs Champion N-5	Prince Motor Parts Princeton, N. J.	Ignition of Gas Rocket
Pressure Reducing Regulator Model 15 S	Grove Regulator Co. Oakland, Calif.	Dome Regulator Control

Bell Jar #B-4895 12" OD x 18"	Scientific Glass and Apparatus Company Bloomfield, N. J.	Propellant Casting
Lord Mounts #150 PDL-8	Lord Manufacturing Co. Erie, Pa.	Propellant Casting
Snubbing Washers #J 2049-2D	Lord Manufacturing Co. Erie, Pa.	Propellant Casting
Vibrator Model V-4	Syntron Newark Sales Co. Hasbrough Heights, N. J.	Propellant Casting

2. Combustible Components

Methane (Chem.pure) 240 cu. ft. 2000 psi Size 1-A	The Matheson Co. E. Rutherford, N. J.	Ignitor Fuel
Oxygen 99% Pure	General Dynamics Corp. Liquid Carbonic Div. Harrison, N. J.	Ignitor Oxidizer
70% Oxygen 30% Nitrogen 1-A Cylinder, 2000 PSI	Air Products Islen, N. J.	Ignitor Oxidizer
30% Oxygen 70% Nitrogen 1-A Cylinder, 2000 PSI	Air Products Islen, N. J.	Ignitor Oxidizer
20% Oxygen 80% Nitrogen 1-A Cylinder, 2000 PSI	Air Products Islen, N. J.	Ignitor Oxidizer
Ammonium Perchlorate Standard AMS-C66F	American Potash Co. New York 16, N. Y.	Propellant Oxidizer
Polyester Resin P-13	Rohm and Haas Co. Philadelphia, Pa.	Fuel Binder
PBAA 325	American Synthetic Rubber Co. Louisville 1, Ky.	Fuel Binder
Epoxy Resin (Epon 828)	Miller-Stephenson Chem.Co. Philadelphia 8, Pa.	Fuel Binder

Lupersol DDM	Wallace & Tierman Buffalo, N. Y.	Propellant Curing Agent
Nuodex Cobalt Accelerator	Nuodex Products Co. New York, N. Y.	Propellant Curing Agent
Lecithin, Vegetable Technical	Fisher Scientific Co. Fairlawn, N. J.	Propellant Wetting Agent
Talc USP	Merck & Co., Inc. Rahway, N. J.	Inhibitor

3. Materials

Copper Bar Round, 3½" dia.	Philadelphia Bronze & Brass Co. Philadelphia, Pa.	Solid and Gas Rocket Nozzle
Brass Bar Round, 3½" dia.	Philadelphia Bronze & Brass Co. Philadelphia, Pa.	Injector Assembly
Stainless Steel Tube Seamless, Type Box 1 3/8"; Outside Diameter 0.065"	A. B. Murray Elizabeth, N. J.	Solid Propellant Curing
Aluminum Bar Round, 2" dia. Type 6061-T6	Whitehead Metals, Inc. Harrison, N. J.	Solid Propellant Mold and Base and Cap.
Teflon Rod ½" dia.	Allied Plastics Supply New York 38, N. Y.	Mold Mandrel
Teflon Rod 5/8" dia.	Allied Plastics Supply New York 38, N. Y.	Plugs for Propellant Port

TABLE I

IGNITION DELAY MEASUREMENTS
FOR CH_4 + 1.88 O_2 FLAMES

PBAA: 75.2

Run No.	P_c, psia	τ, msec	$\tau^{1/2}$, $msec^{1/2}$	$\dot{q}/\dot{q}_o$
108	33	49.1	7.02	1.000
110	29	36.6	6.06	1.144
119	47	25.8	5.10	1.327
102	72	8.9	2.99	1.865
120	76	9.1	3.02	1.949
104	78	9.3	3.05	1.990
121	94	5.6	2.37	2.310

PBAA: 80.2

109	34	29.1	5.465	1.000
106	44	15.7	3.97	1.228
107	52	10.6	3.26	1.405
105	67	7.4	2.725	1.720
117	73	6.2	2.495	1.843
103	103	3.5	1.875	2.428
116	106	3.0	1.732	2.488
123	120	2.7	1.647	2.751
124	129	2.2	1.486	2.910

TABLE II

IGNITION DELAY MEASUREMENTS
FOR CH_4 + 9.5 [x O_2 + (1-x) N_2] FLAMES

Run No.	P_c, psia	τ, msec	% O_2 in source gas	P_{O_2}, psia
261	33.7	23.1	100	24.0
262	35.7	23.3	100	25.5
151	59.7	6.9	100	42.6
152	58.7	6.9	100	41.8
147	78.7	2.7	100	56.0
148	78.7	3.1	100	56.0
153	77.7	2.8	100	56.0
149	109.7	1.8	100	78.0
150	105.7	2.0	100	75.2
160	34.7	31.8	70	15.1
161	33.7	33.7	70	14.6
162	31.7	33.3	70	13.8
164	55.7	13.1	70	24.2
171	60.7	13.7	70	26.4
174	56.7	13.4	70	24.6
169	79.7	4.3	70	34.6
175	76.7	7.2	70	33.2
178	82.7	5.4	70	35.9
179	83.7	4.9	70	36.3
167	108.7	2.8	70	47.2
170	107.7	2.4	70	46.7
177	110.7	2.6	70	48.1
191	35.7	31.5	55	10.6
192	34.7	36.4	55	10.4
193	34.7	33.1	55	10.4
190	34.7	31.7	55	10.4

TABLE II-contd.

IGNITION DELAY MEASUREMENTS

FOR CH_4 + 9.5 [x O_2 + (1-x) N_2] FLAMES

Run No.	P_c, psia	τ, msec	% O_2 in source gas	P_{O_2}, psia
195	59.7	15.5	55	17.7
196	56.7	17.5	55	16.8
197	58.7	17.1	55	17.5
198	58.7	17.8	55	17.5
182	83.7	6.6	55	25.0
186	83.7	6.4	55	25.0
188	83.7	8.2	55	25.0
180	110.7	4.6	55	33.0
181	108.7	4.2	55	32.4
183	106.7	4.0	55	31.9
217	28.7	36.5	40	4.74
218	32.7	31.9	40	5.40
219	33.7	33.1	40	5.56
208	59.7	21.1	40	9.85
209	58.7	22.9	40	9.68
215	57.7	21.0	40	9.52
216	59.7	20.1	40	9.85
212	82.7	10.6	40	13.63
213	82.7	11.0	40	13.63
214	78.7	13.5	40	12.99
206	79.7	10.0	40	13.15
202	104.7	7.2	40	17.26
203	106.7	6.6	40	17.60
232	34.7	32.1	30	2.86
266	36.7	32.8	30	3.03
269	30.7	33.7	30	2.53

TABLE II-contd.

IGNITION DELAY MEASUREMENTS

FOR CH_4 + 9.5 [x O_2 + (1-x) N_2] FLAMES

Run No.	P_c, psia	τ, msec	% O_2 in source gas	P_{O_2}, psia
270	30.7	35.0	30	2.53
264	58.7	21.2	30	4.85
265	58.7	20.2	30	4.85
221	79.7	13.8	30	6.58
272	77.7	13.4	30	6.41
273	77.7	13.9	30	6.41
222	109.7	11.2	30	9.05
223	107.7	10.6	30	8.88
224	104.7	10.2	30	8.63

TABLE III

IGNITION DELAY MEASUREMENTS
FOR CH_4 + 0.905 O_2 FLAMES

Run No.	P_c, psia	τ, msec	% O_2 in source gas
254	31.7	34.6	100
255	33.7	33.7	100
256	33.7	33.4	100
247	55.7	20.8	100
248	55.7	21.2	100
249	59.7	19.6	100
250	59.7	19.2	100
236	78.7	12.6	100
237	80.7	11.1	100
251	77.7	13.1	100
252	77.7	12.7	100
238	108.7	9.8	100
239	106.7	9.4	100

TABLE IV

Moles of Combustion Products
at 100 psia

Reactants	H	O_2	OH	O	CO_2	H_2	H_2O	CO
$CH_4 + 2\ O_2$	0.2502	0.5476	0.6042	0.2288	0.8252	0.4591	2.8476	1.0418
$CH_4 + 9.5\ O_2$	0.0002	4.8369	0.0393	0.0082	0.6442	0.0008	1.2725	0.0024
$CH_4 + 9.5(0.8\ O_2 + 0.2\ N_2)$	0.0002	3.5745	0.0358	0.0069	0.6440	0.0010	1.2745	0.0027
$CH_4 + 9.5(0.6\ O_2 + 0.4\ N_2)$	0.0003	2.3409	0.0337	0.0060	0.6432	0.0013	1.2752	0.0036
$CH_4 + 9.5(0.4\ O_2 + 0.4\ N_2)$	0.0004	1.1203	0.0301	0.0046	0.6409	0.0020	1.2762	0.0058
$CH_4 + 9.5(0.2\ O_2 + 0.4\ N_2)$	0.0011	0.0013	0.0042	0.0001	0.5462	0.0398	1.2404	0.0952
$CH_4 + 0.905\ O_2$	-	-	-	-	0.0963	1.2867	0.7038	0.9032

TABLE IV-contd.

Moles of Combustion Products
at 100 psia

Reactants	NO	NO_2	N_2
$CH_4 + 9.5(0.8\ O_2 + 0.2\ N_2)$	0.0724	0.0004	1.1924
$CH_4 + 9.5(0.6\ O_2 + 0.4\ N_2)$	0.0855	0.0003	2.4147
$CH_4 + 9.5(0.4\ O_2 + 0.6\ N_2)$	0.0756	0.0002	3.6484
$CH_4 + 9.5(0.2\ O_2 + 0.8\ N_2)$	0.0025	0.0000	4.8737

TABLE V

Oxygen Concentration for Various Source Gases and Dummy Chamber Pressures

% O_2 in source gas	O_2 mass fraction	C_{ox}, x 10^{-4} gm/cm^3			
		110 psia	80 psia	60 psia	35 psia
100	0.751	8.71	6.54	4.96	2.91
70	0.486	5.61	4.22	3.20	1.87
55	0.337	3.91	2.93	2.23	1.31
40	0.188	2.18	1.64	1.24	0.73
30	0.094	1.09	0.82	0.62	0.37

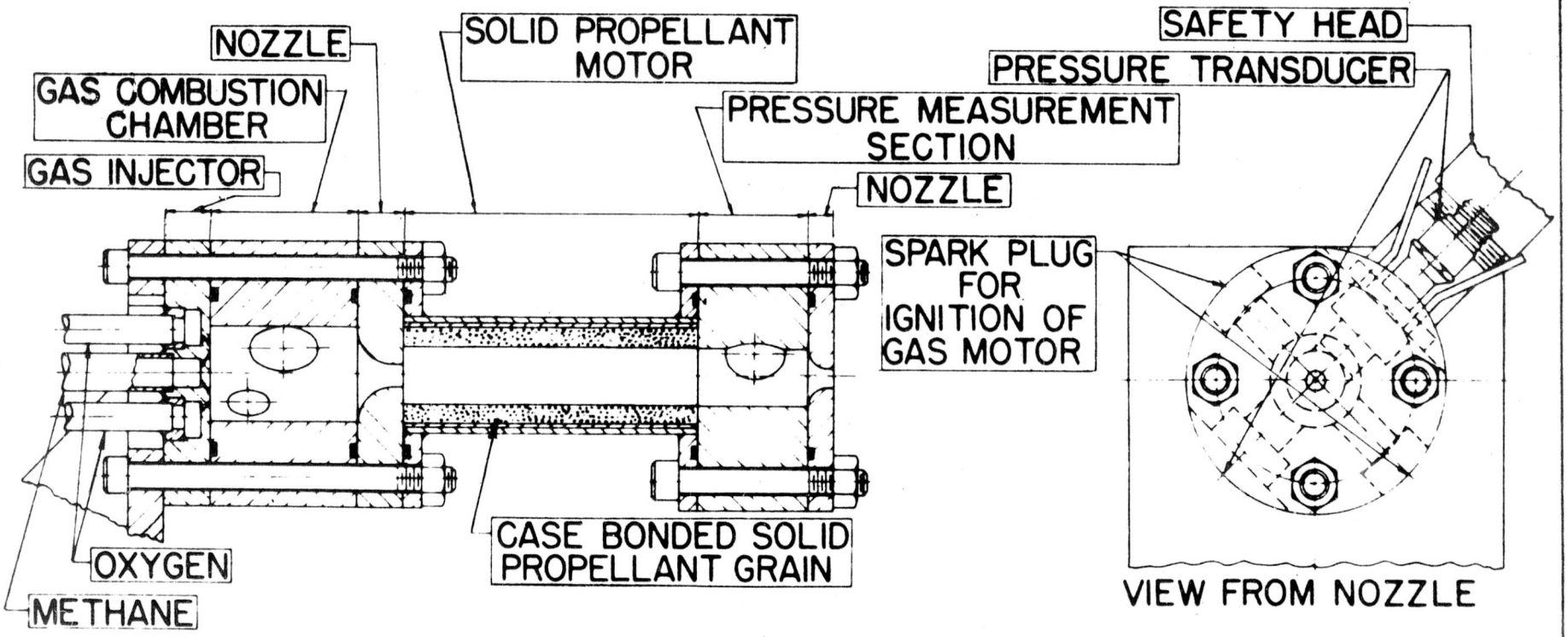

ROCKET MOTOR FOR STUDY OF GASEOUS IGNITION OF SOLID PROPELLANT

FIGURE 1

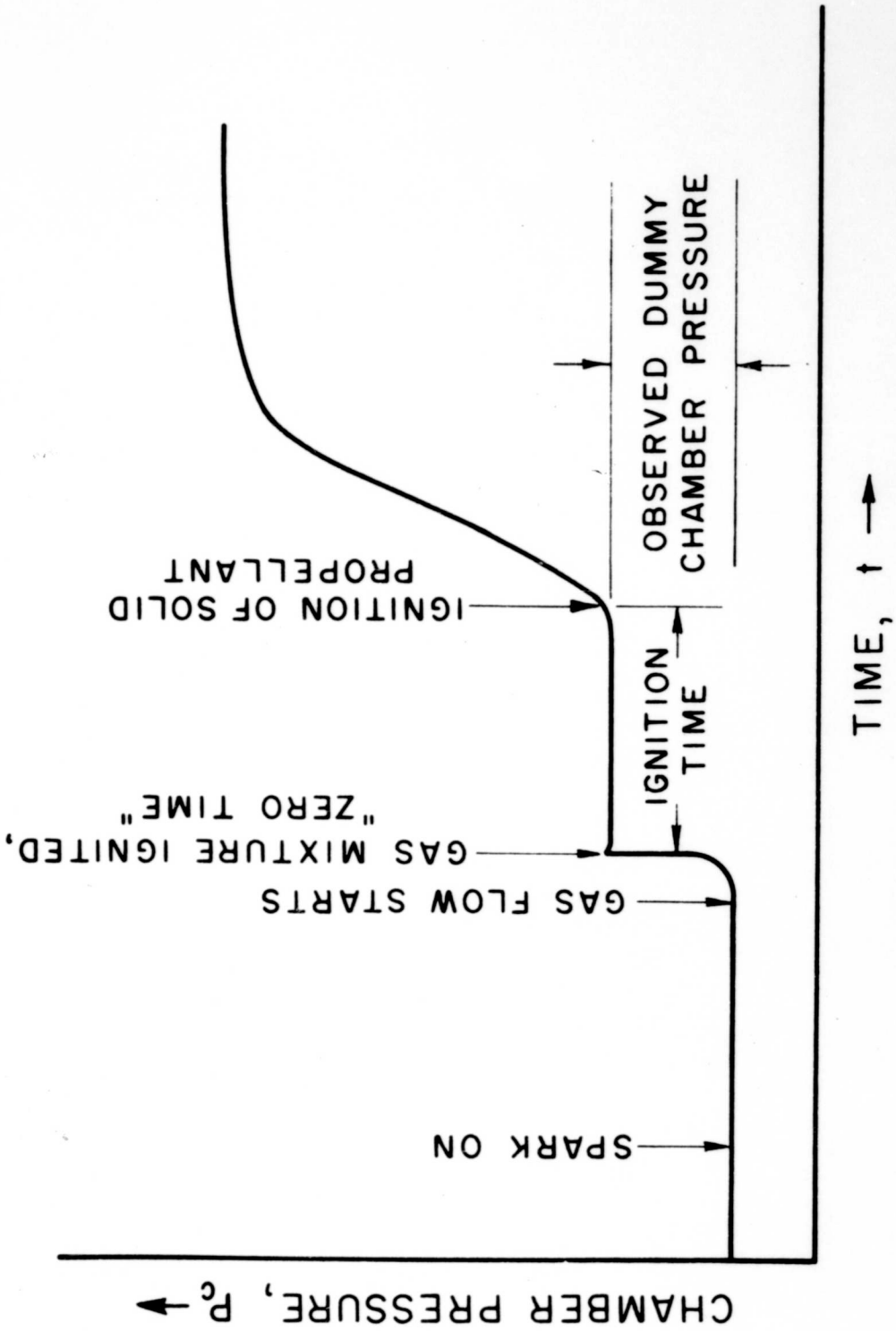

INTERPRETATION OF IDEALIZED IGNITION RECORD

FIGURE 2

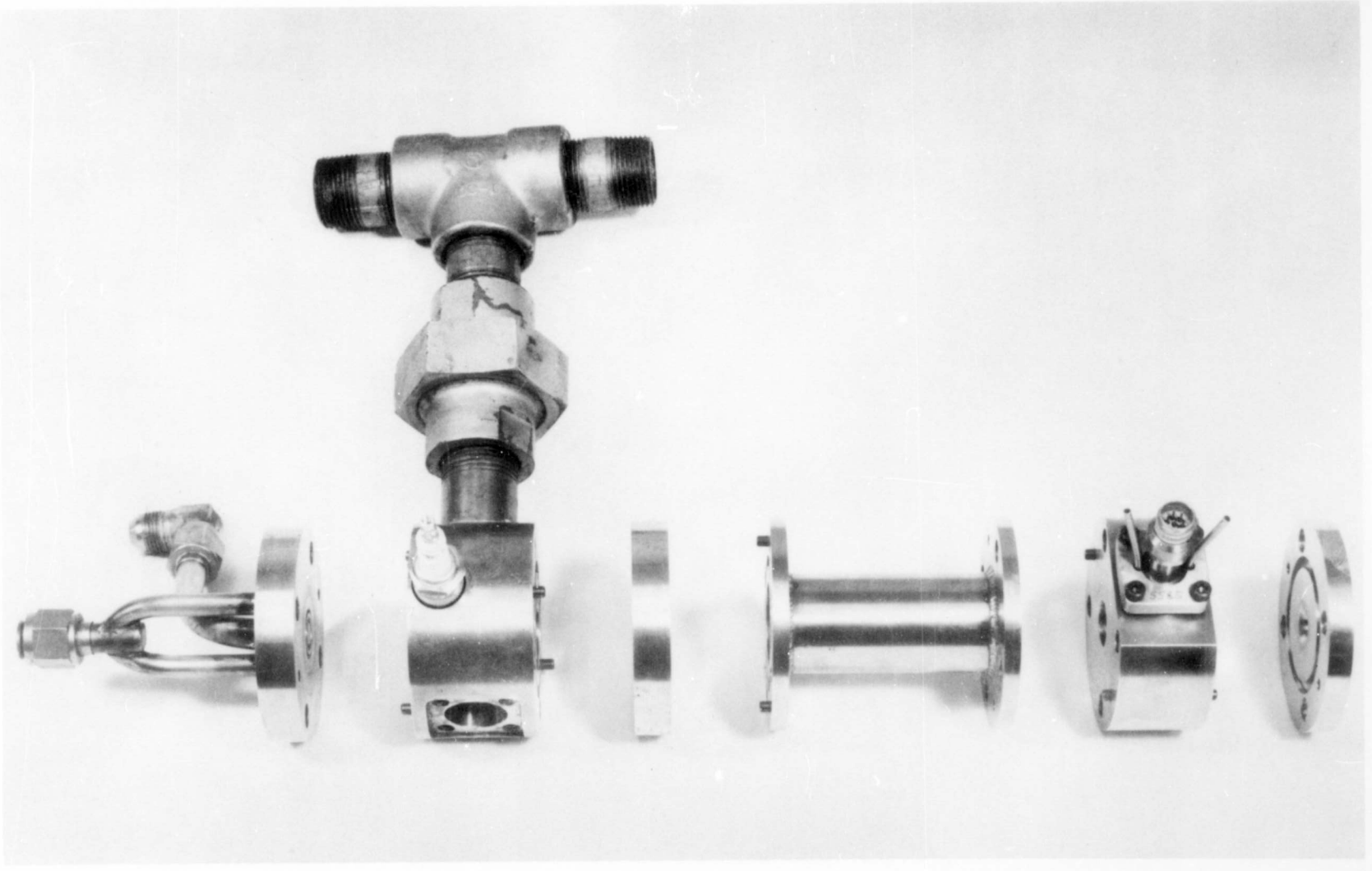

EXPLODED VIEW OF MOTOR

FIGURE

LEFT TO RIGHT: INJECTOR, GAS ROCKET COMBUSTION CHAMBER WITH SPARK PLUG AND PRESSURE SAFETY RELIEF CONNECTION, GAS ROCKET NOZZLE, SOLID PROPELLANT MOTOR CASING, HOUSING CONTAINING PRESSURE TRANSDUCER, AND EXIT NOZZLE

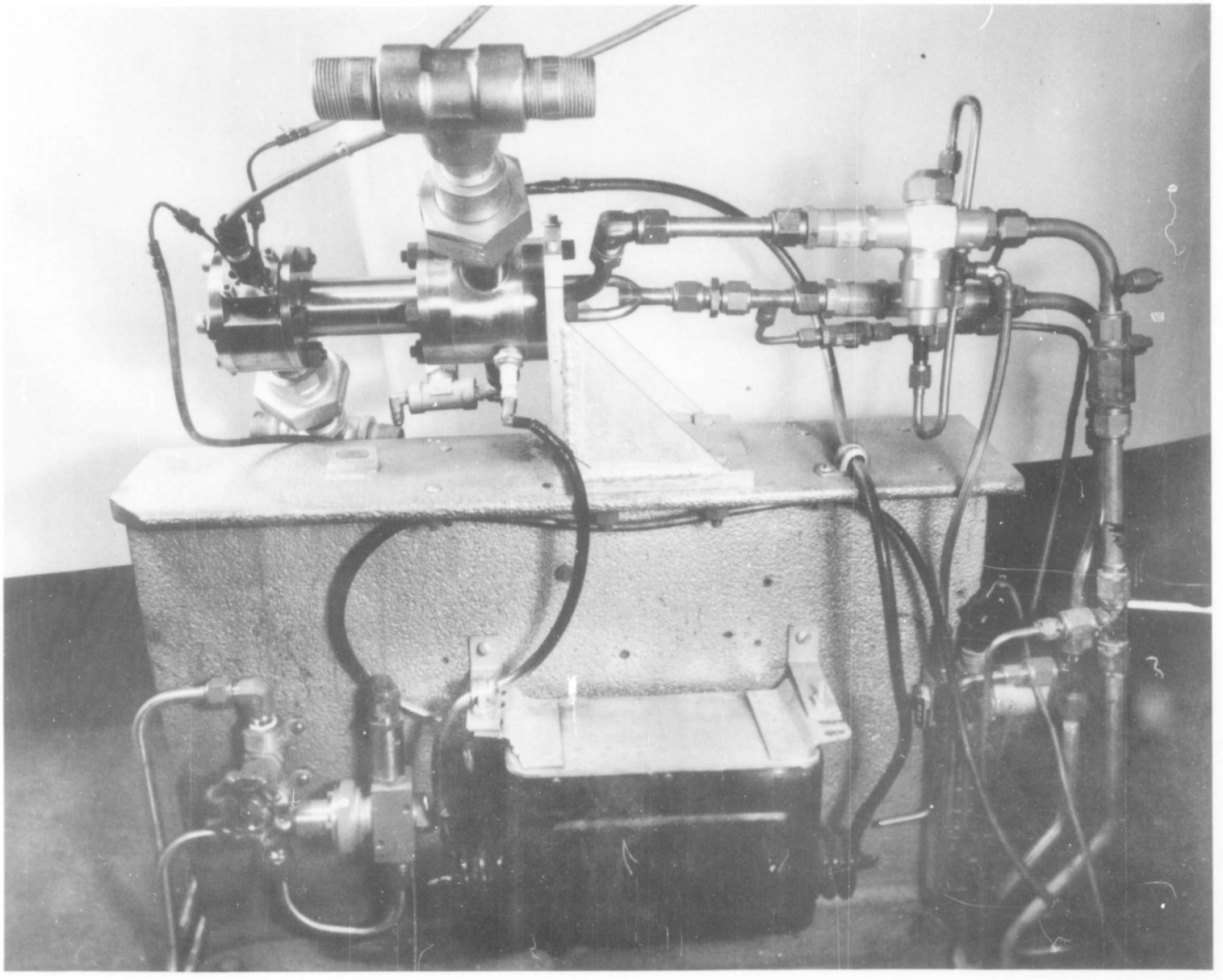

VIEW OF TEST APPARATUS

TOP: ASSEMBLED TEST MOTOR, PNEUMATIC CONTROL VALVES FOR GASEOUS CONSTITUENTS

BOTTOM: NEON TRANSFORMER, SOLENOID VALVES

FIGURE 4

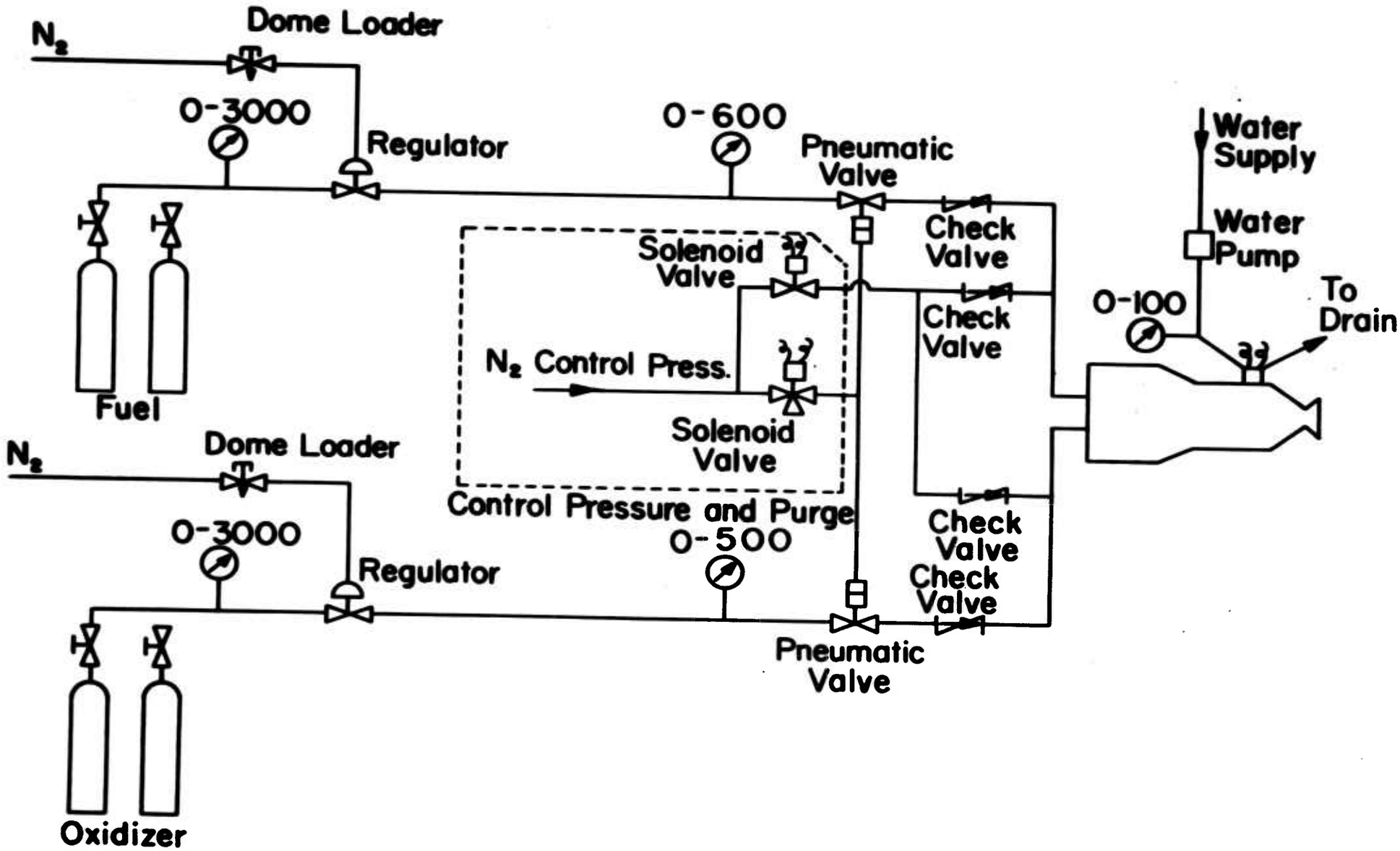

FIGURE 5

FLOW CIRCUITS FOR IGNITER GASEOUS COMBUSTIBLES AND TRANSDUCER COOLING WATER

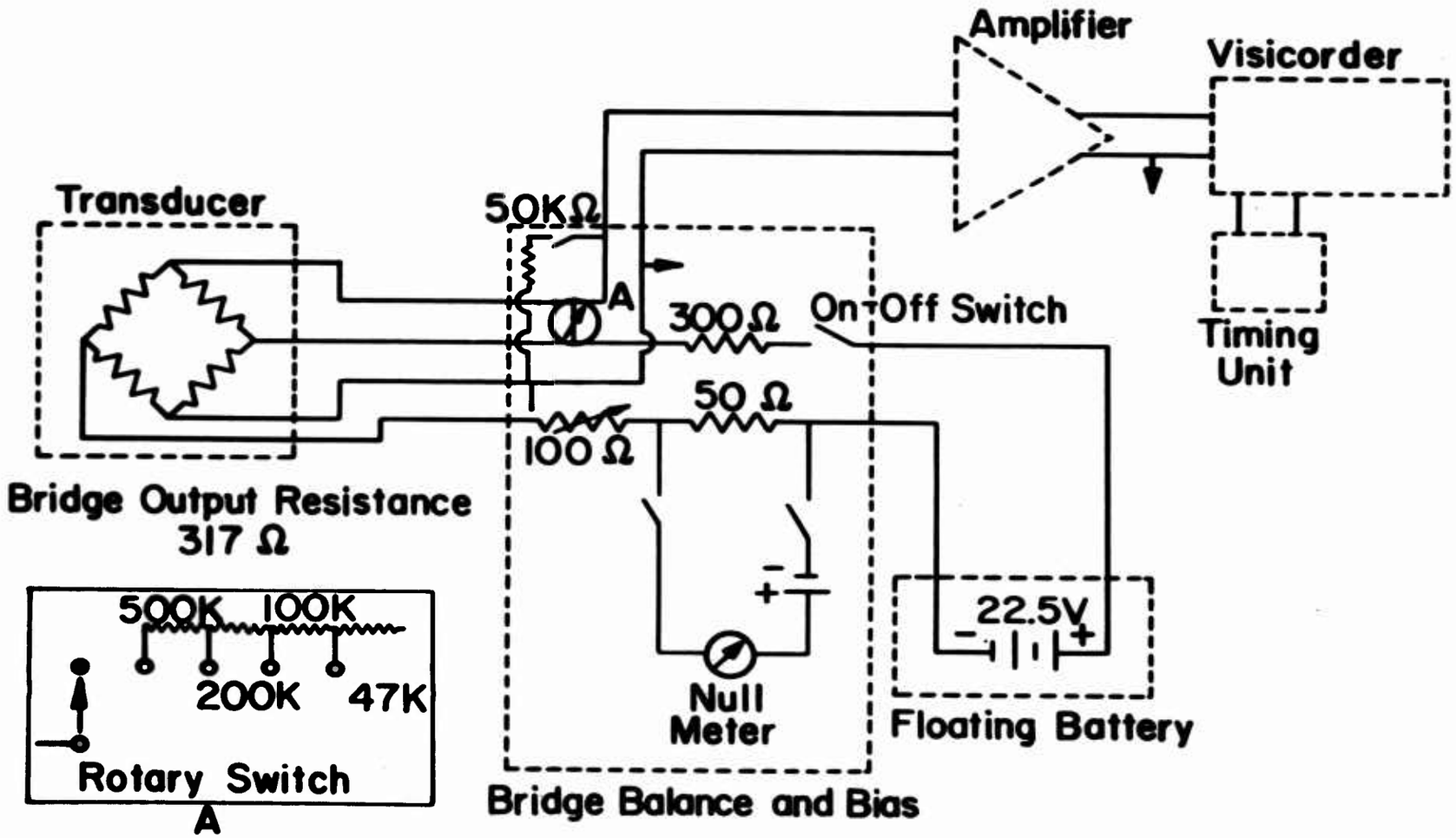

FIGURE 6

CIRCUIT FOR PRESSURE GAGE INSTRUMENTATION

CALIBRATION OF TRANSDUCER #11080
AT 65 psig WATER PRESSURE

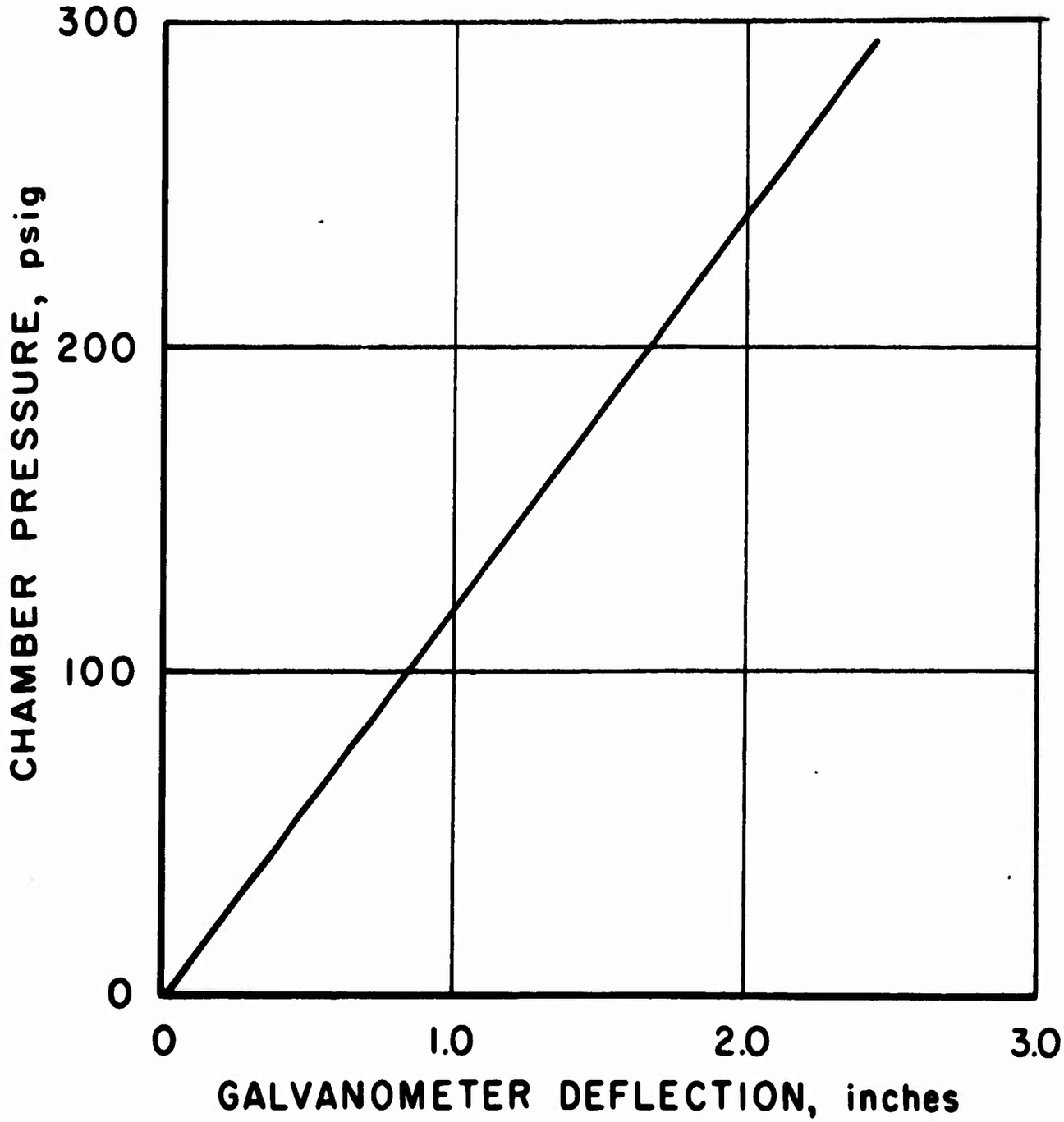

FIGURE 7

RECORDED PRESSURE-TIME TRACES FOR OBSERVED DUMMY CHAMBER PRESSURE AND IGNITION DELAY MEASUREMENTS

RUN #174
P_c = 56.7 psia
τ = 13.4 msc
48.6% O_2 IN TEST GAS

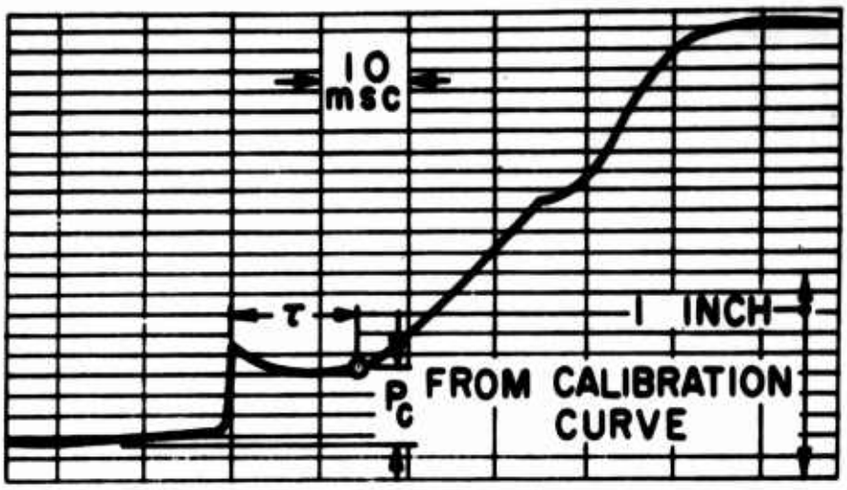

RUN #197
P_c = 58.7 psia
τ = 17.1 msc
33.8% O_2 IN TEST GAS

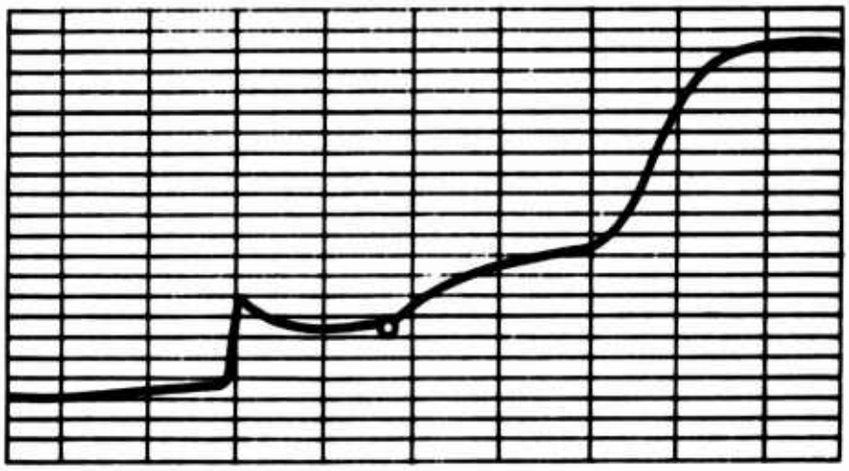

RUN #209
P_c = 58.7 psia
τ = 22.9 msc
9.4% O_2 IN TEST GAS

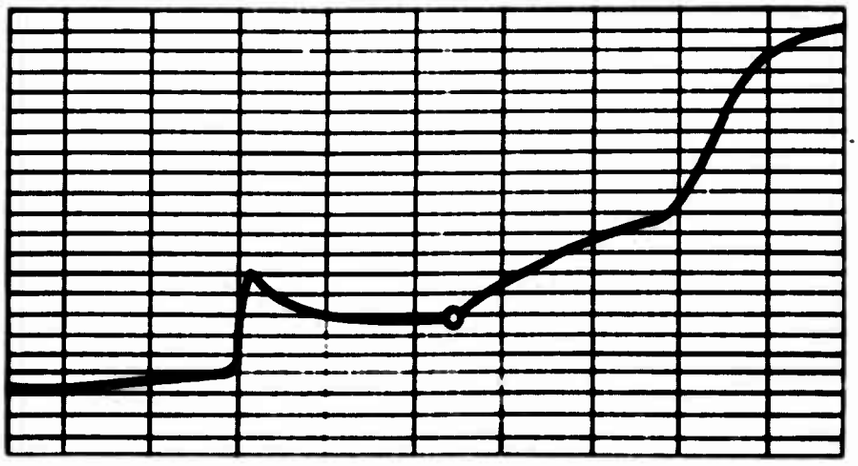

FIGURE 8

PERCENT OXYGEN IN FLAME GAS

FOR $CH_4 + 9.5\left[xO_2 + (1-x)N_2\right]$ FLAMES

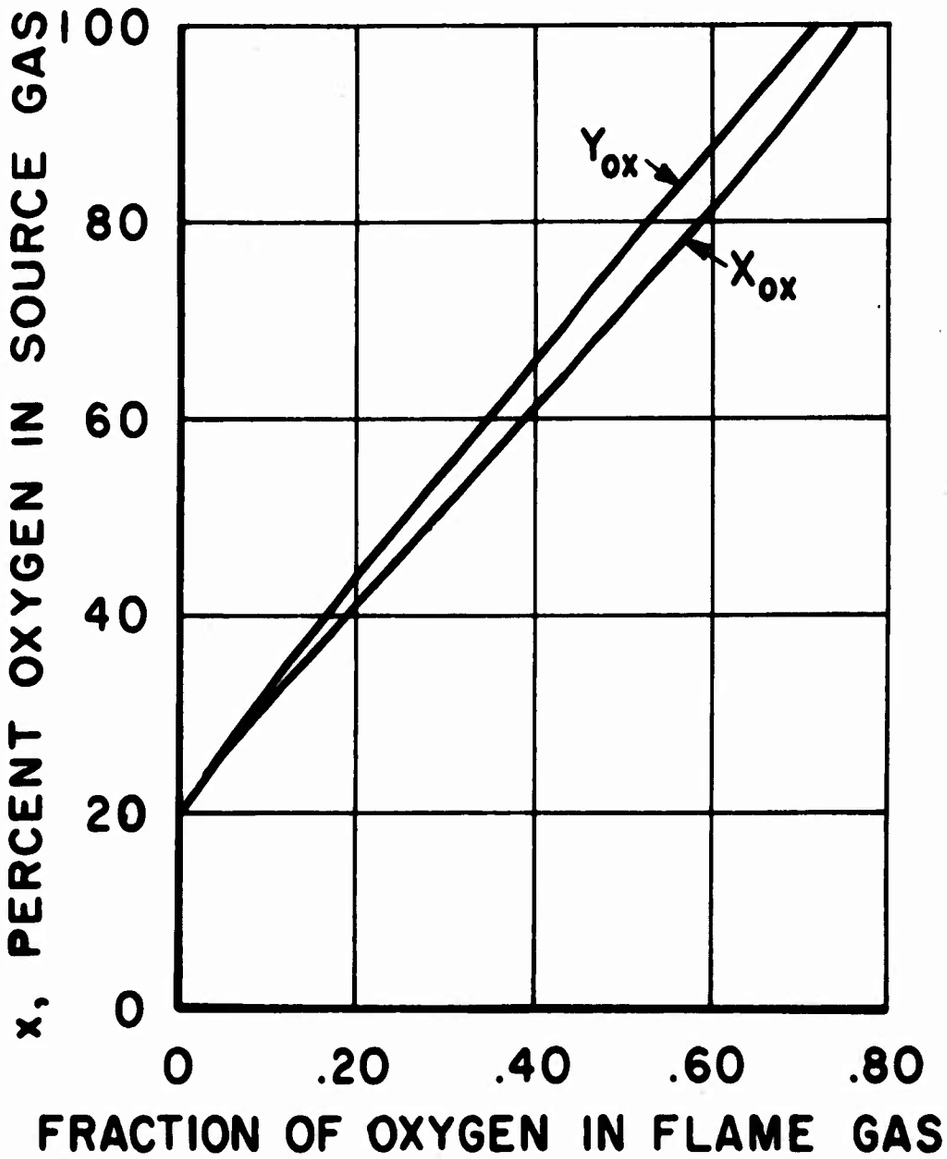

JPR 1291

FIGURE 9

PRESSURE EFFECT ON ADIABATIC FLAME TEMPERATURE FOR $CH_4 + 2O_2$ FLAMES

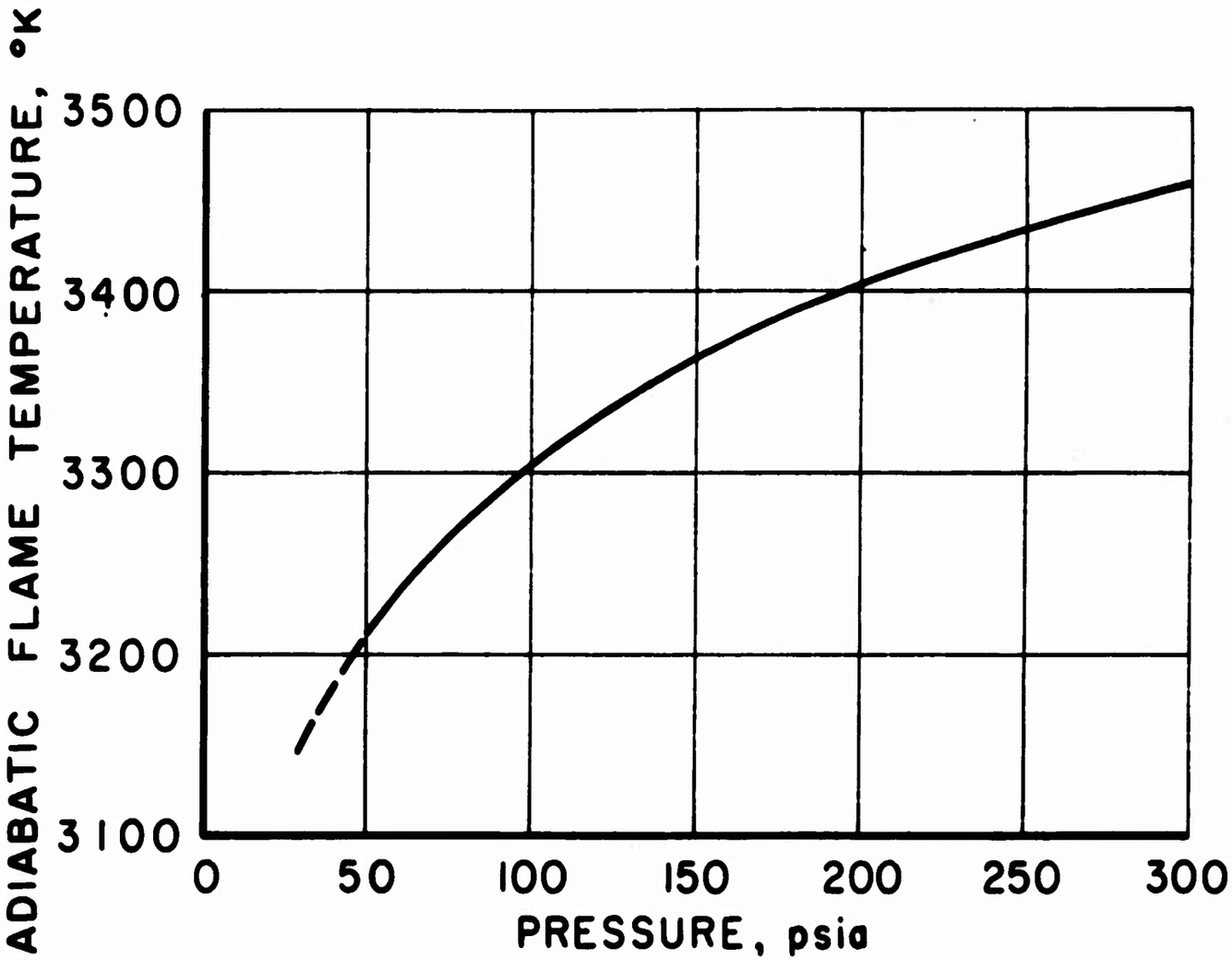

FIGURE 10

PRESSURE EFFECT ON ADIABATIC FLAME TEMPERATURE FOR $CH_4 + 9.5\left[xO_2 + (1-x)N_2\right]$ FLAMES

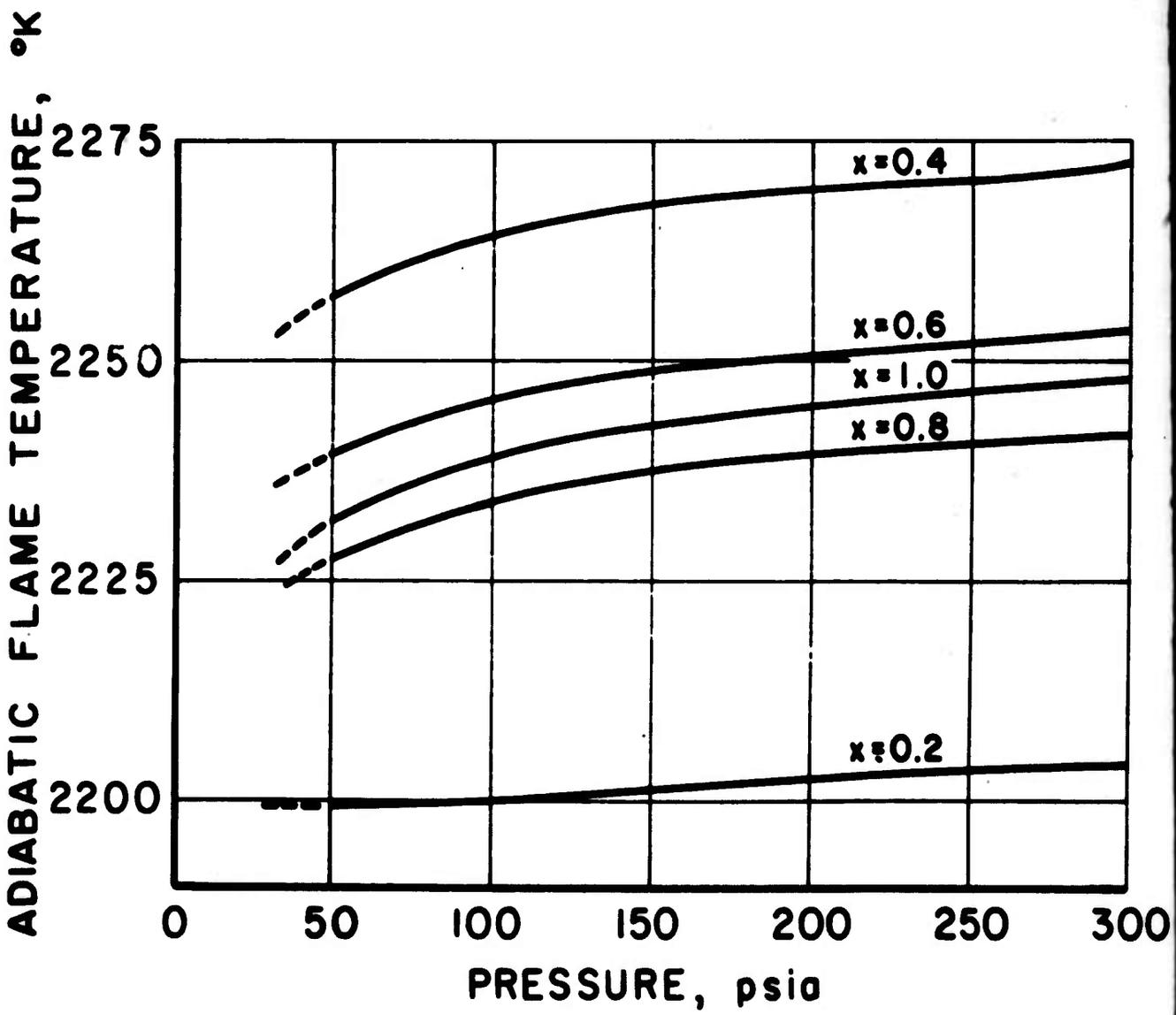

FIGURE 11

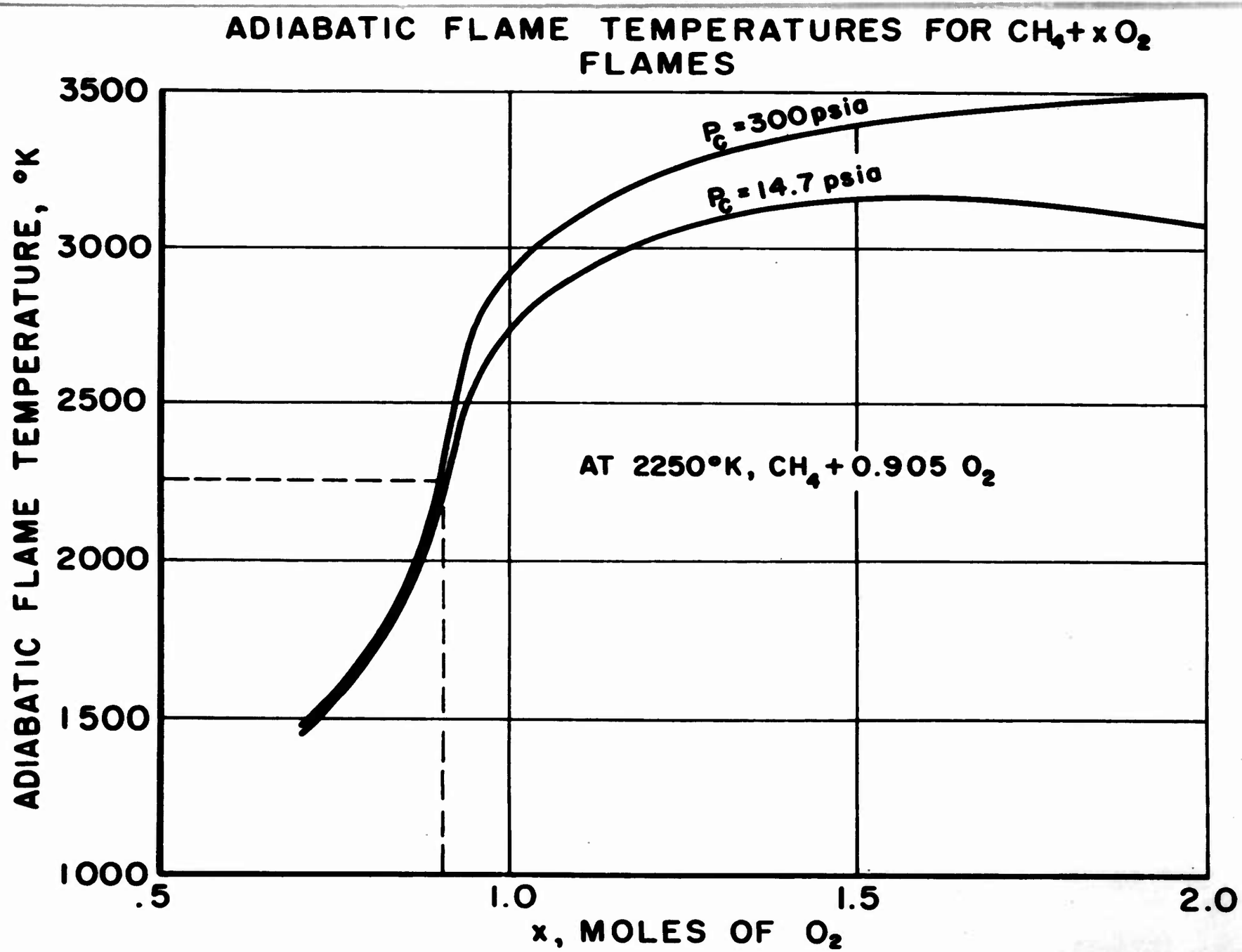
ADIABATIC FLAME TEMPERATURES FOR $CH_4 + x\,O_2$ FLAMES
ADIABATIC FLAME TEMPERATURE, °K
3500
3000
2500
2000
1500
1000
.5
1.0
1.5
2.0
x, MOLES OF O_2
P_c = 300 psia
P_c = 14.7 psia
AT 2250°K, CH_4 + 0.905 O_2

FIGURE 12

IGNITION DELAY VERSUS OBSERVED DUMMY CHAMBER PRESSURE FOR CONSTANT IGNITER COMPOSITION, CH_4+1.88O_2

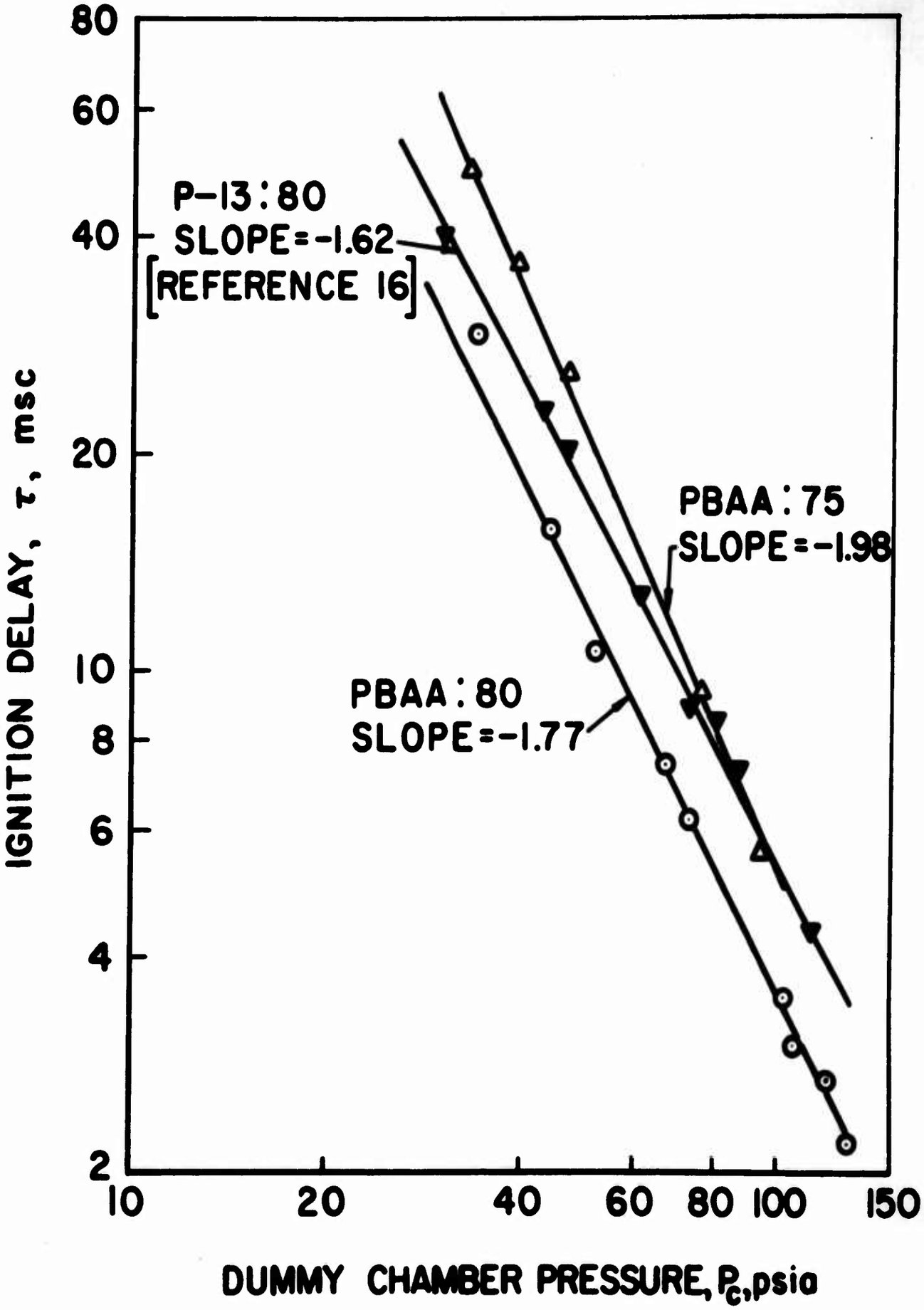

FIGURE 13

IGNITION ROCKET MOTOR EXPERIMENTS
ON COMPOSITE PROPELLANTS

IGNITION DELAY, t, VERSUS WEIGHT FRACTION OF OXYGEN PRESENT IN COMBUSTION PRODUCTS OBTAINED FROM IGNITER TORCH

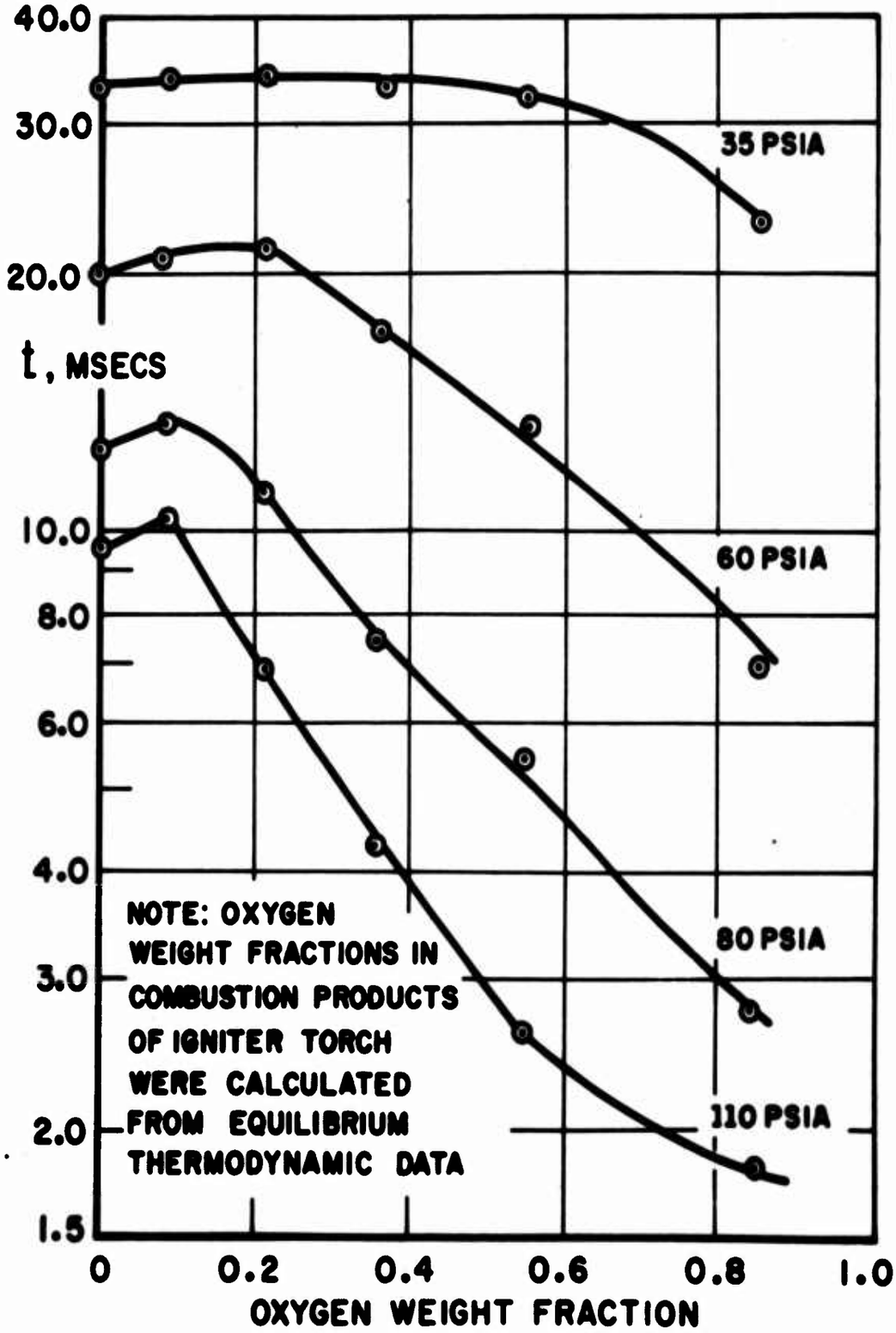

FIGURE 14

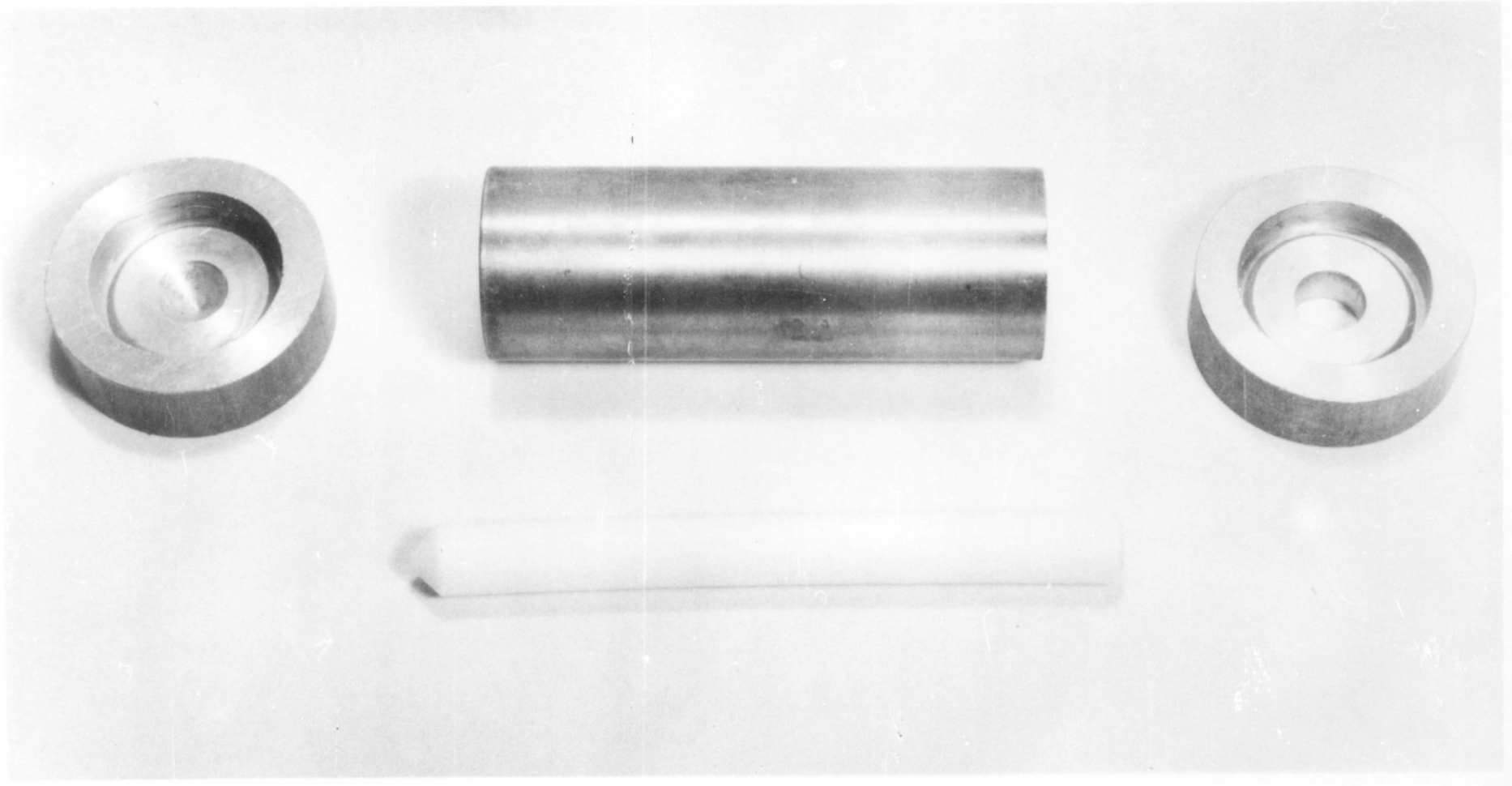

EXPLODED VIEW OF A SOLID PROPELLANT MOLD

LEFT TO RIGHT: BASE, TEFLON MANDREL, PROPELLANT CASE, AND CAP

FIGURE 15

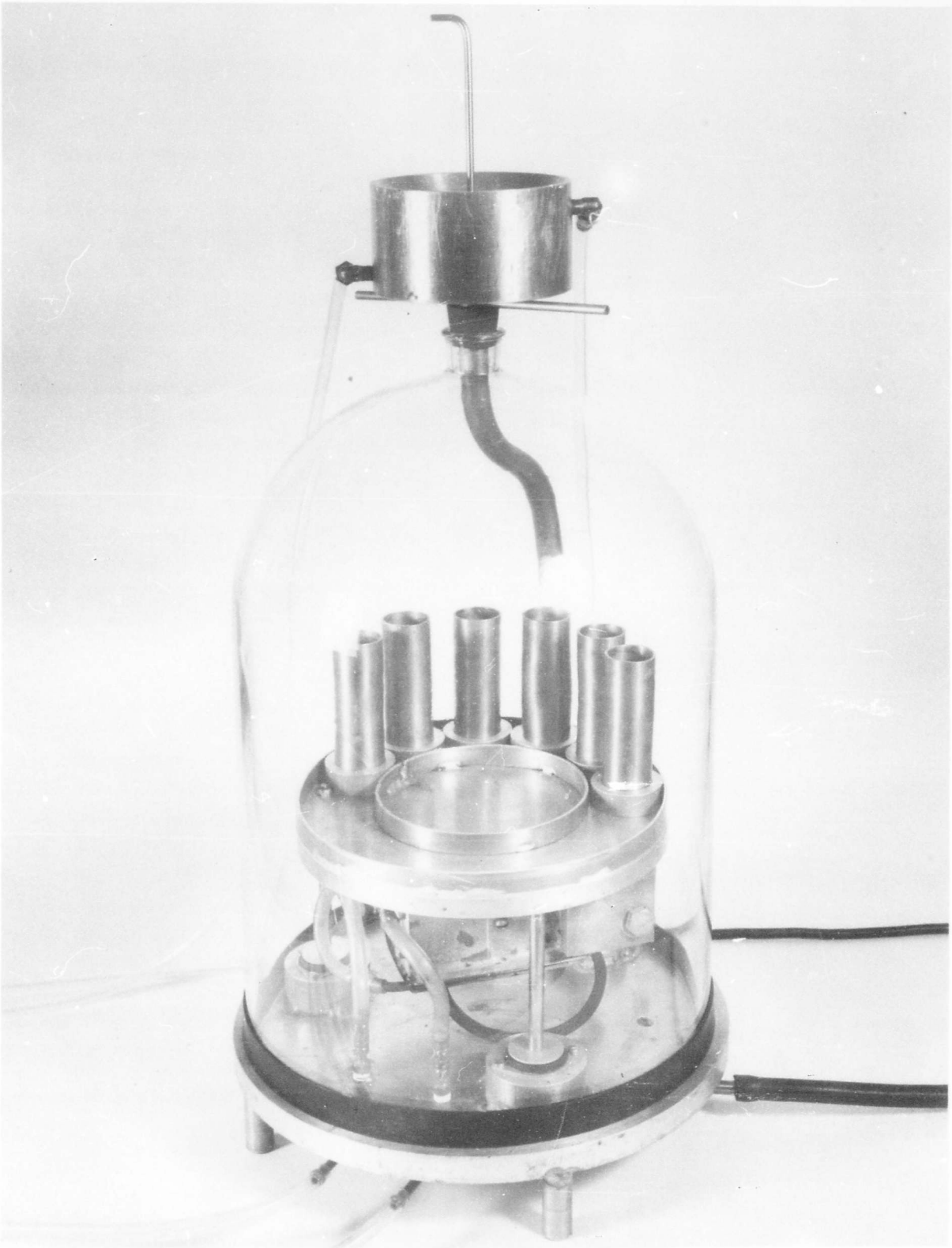

SOLID PROPELLANT CASTING RIG

TOP TO BOTTOM: FLOW CONTROL PLUNGER, HEATED ALUMINUM FUNNEL, FEED TUBE, VIBRATING CASTING PLATFORM, LORD MOUNTS, AND VACUUM SUCTION LINE.

FIGURE 16

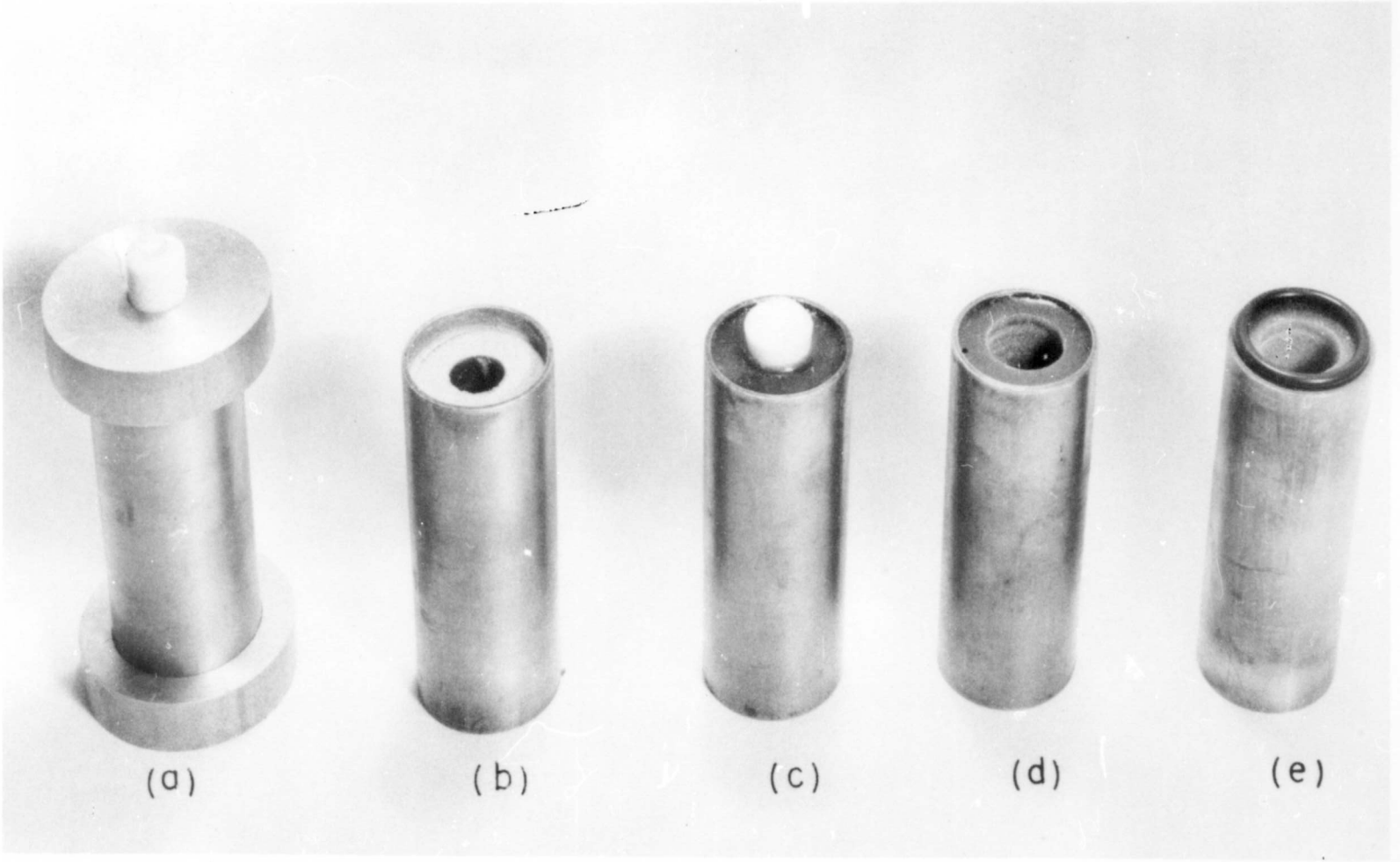

STAGES OF PREPARATION OF A SOLID PROPELLANT GRAIN

(a) AFTER CASTING, READY FOR CURING
(b) PREPARED FOR INHIBITING
(c) INHIBITED
(d) AFTER ENLARGING CORE DIAMETER
(e) READY FOR FIRING

FIGURE 17

UNCLASSIFIED

UNCLASSIFIED