UNCLASSIFIED

AD 419240

DEFENSE DOCUMENTATION CENTER

FOR

SCIENTIFIC AND TECHNICAL INFORMATION

CAMERON STATION, ALEXANDRIA, VIRGINIA

UNCLASSIFIED

NOTICE: When government or other drawings, specifications or other data are used for any purpose other than in connection with a definitely related government procurement operation, the U. S. Government thereby incurs no responsibility, nor any obligation whatsoever; and the fact that the Government may have formulated, furnished, or in any way supplied the said drawings, specifications, or other data is not to be regarded by implication or otherwise as in any manner licensing the holder or any other person or corporation, or conveying any rights or permission to manufacture, use or sell any patented invention that may in any way be related thereto.

CATALOGED BY DDC
AS AD No. 419240

ELASTIC COMPLIANCES OF CYLINDRICALLY AEOLOTROPIC PLATES

64-5

by

W. H. Hoppmann II

and

I. A. Minkarah

Department of the Army - Ordnance Corps
Contract No. DA-30-069-AMC-195(R)

Under the technical control of:

Ballistic Research Laboratories
Aberdeen Proving Ground
Aberdeen, Maryland

DDC
OCT 9 1963

Department of Mechanics
Rensselaer Polytechnic Institute
Troy, New York

September 1963

ELASTIC COMPLIANCES OF CYLINDRICALLY AEOLOTROPIC PLATES

by

W. H. Hoppmann II
Professor of Mechanics
Rensselaer Polytechnic Institute
Troy, New York

and

I. A. Minkarah
Instructor in Civil Engineering
Rensselaer Polytechnic Institute
Troy, New York

ABSTRACT

An experimental method for the determination of the elastic compliances of cylindrically aeolotropic plates has been developed. It consists in subjecting a simply supported circular plate to a concentrated transverse load and measuring deflections at appropriate locations. Substitution of the measured deflections into the solution of the differential equation of flexure of the plate provides a set of simultaneous algebraic equations for the determination of the compliances. As an illustration of the method, the equivalent elastic compliances for a circular aluminum plate reinforced with circular stiffeners of the same material were determined. The results are presented in the form of Curves and Tables.

NOMENCLATURE

r, θ, z	=	cylindrical coordinates
$\epsilon_r, \epsilon_\theta, \gamma_{r\theta}$	=	radial, tangential, and shear strains
$\sigma_r, \sigma_\theta, \tau_{r\theta}$	=	radial, tangential, and shear stresses
w	=	deflection of the plate
S_{ij}	=	elastic compliances
S_{12}	=	S_{21}
E_r, E_θ	=	Young's moduli for radial and tangential directions
ν_r, ν_θ	=	Poisson's ratios
G	=	shear modulus
E_r	=	$\frac{1}{S_{11}}$
E_θ	=	$\frac{1}{S_{22}}$
G	=	$\frac{1}{S_{66}}$
ν_r	=	$-\frac{S_{12}}{S_{11}}$
ν_θ	=	$-\frac{S_{12}}{S_{22}}$
$E_r \nu_\theta$	=	$E_\theta \nu_r$
D_r, D_θ	=	bending stiffnesses about the θ and r directions
D_k	=	torsional stiffness

$D_r = \dfrac{E_r h^3}{12(1-\nu_r \nu_\theta)}$

$D_\theta = \dfrac{E_\theta h^3}{12(1-\nu_r \nu_\theta)}$

$D_k = \dfrac{Gh^3}{12}$

h = thickness of plate, or equivalent plate

$D_{r\theta} = 2D_k + \nu_\theta D_r = 2D_k + \nu_r D_\theta$

q = applied load per unit area of surface

P = concentrated force

$k = \sqrt{\dfrac{D_\theta}{D_r}}$

$\sigma' = \dfrac{D_{r\theta}}{D_r}$

p_m , q_m = roots of characteristic equation for the asymmetric loading solution (equation 8)

k_1 = root of characteristic equation for $m = 1$

a = radius of plate

b = radius at which the concentrated load is applied

$W = \dfrac{w}{P}$ = deflection per unit load

w_c , $w_{1/4}$, $w_{1/2}$ = deflections at the center, quarter point and half point of the plate

A, B, C	=	constants defined by equation (15)	
C_i	=	integration constants	
a_n	=	constants in the Frobenius series	
m_i	=	indices in the Frobenius solution	
F	=	$2\nu^2\sigma' + k^2$	ν ranges from $-\infty$ to $+\infty$
G	=	$\nu^4k^2 - 2\nu^2(k^2+\sigma')$	ν ranges from $-\infty$ to $+\infty$

INTRODUCTION

In order to determine the elastic compliances of an anisotropic material, it is necessary to conduct deformation experiments on a portion of the material subjected to known surface loads and displacements. In particular, to determine the compliances for thin sheets of circularly orthotropic material it suffices to load with an eccentric concentrated force, a circular plate of the material supported along its edge. The plate should be formed so that its radii are a system of principal directions for stiffness and circles concentric with the boundary of the plate are the orthogonal set of principal directions of stiffness. Measurements of deflections normal to the plate surface can be made at a suitable number of points appropriately located. The introduction of these measured deflections into the theoretically determined equations for deflection enables one to determine the elastic compliances simply by solving a set of simultaneous algebraic equations.

Although the theoretical solution for the circularly orthotropic plate with clamped boundary and subjected to an eccentric concentrated force has been obtained by A. M. Sen Gupta [1][1], it is more convenient to perform the experiments on a plate having so-called simply-supported or momentless edge. A study of a satisfactory method of providing experimentally a momentless edge, has been presented in the technical literature [2]. There the usefulness of the momentless edge condition has been particularly emphasized. Consequently, it is desirable to have available the solution of the plate equation which satisfies such a boundary condition. The solution has now been obtained and the results given in the present paper. Also, a complete description of the experimental procedure for determining the deflections caused by a concentrated load along with a complete analysis of a circularly stiffened circular plate is presented.

GOVERNING EQUATIONS AND METHOD OF ANALYSIS

Using the definition of cylindrical aeolotropy, and neglecting the effect of σ_z, the generalized Hooke's Law in polar coordinates is as follows [3,4]:

---

[1]Numbers in brackets designate References at end of paper.

$$\epsilon_r = S_{11}\,\sigma_r + S_{12}\,\sigma_\theta$$

$$\epsilon_\theta = S_{21}\,\sigma_r + S_{22}\,\sigma_\theta \qquad (1)$$

$$\gamma_{r\theta} = S_{66}\,\tau_{r\theta}$$

where the S_{ij} are the elastic compliances of the material and $S_{12} = S_{21}$.

In terminology which is familiar in engineering the constitutive equations may be restated as follows [4]:

$$\epsilon_r = \frac{1}{E_r}(\sigma_r - \nu_r\,\sigma_\theta)$$

$$\epsilon_\theta = \frac{1}{E_\theta}(\sigma_\theta - \nu_\theta\,\sigma_r) \qquad (2)$$

$$\gamma_{r\theta} = \frac{\tau_{r\theta}}{G}$$

where E_r , E_θ are Young's moduli for the radial and tangential directions; ν_r , ν_θ the Poisson's ratios; $E_r\,\nu_\theta = E_\theta\,\nu_r$; and G the shear modulus.

Using the principles of plate theory for small deflections and the proposed stress-strain law, it can readily be shown that the differential equation for flexure is [3,4]:

$$D_r \frac{\partial^4 w}{\partial r^4} + \frac{2D_{r\theta}}{r^2} \frac{\partial^4 w}{\partial r^2 \partial \theta^2} + \frac{D_\theta}{r^4} \frac{\partial^4 w}{\partial \theta^4} + \frac{2D_r}{r} \frac{\partial^3 w}{\partial r^3} - \frac{2D_{r\theta}}{r^3} \frac{\partial^3 w}{\partial r \partial \theta^2} -$$

$$- \frac{D_\theta}{r^2} \frac{\partial^2 w}{\partial r^2} + \frac{2(D_\theta + D_{r\theta})}{r^4} \frac{\partial^2 w}{\partial \theta^2} + \frac{D_\theta}{r^3} \frac{\partial w}{\partial r} = q(r,\theta) \qquad (3)$$

The differential equation was solved and the deflection equation determined for the case of simple support on the edge. The results are:

$$w = R_0 + \sum_{m=1}^{\infty} R_m \cos m\theta \qquad b < r \leq a \qquad (4)$$

where

$$R_0 = \frac{Pa^2}{4\pi D_r(k^2-1)} \left\{ \frac{1}{1+k} \left[\frac{2(1+\nu_\theta)}{(k+\nu_\theta)} - \frac{k-1}{k} \frac{\nu_\theta - k}{\nu_\theta + k} \left(\frac{b}{a}\right)^{1+k} \right] \left(\frac{r}{a}\right)^{1+k} + \right.$$

$$\left. + \frac{k-1}{k+1} \frac{(2+k+\nu_\theta)}{(k+\nu_\theta)} + \frac{2}{k+1} \frac{1+\nu_\theta}{k+\nu_\theta} \left(\frac{b}{a}\right)^{1+k} - \left(\frac{r}{a}\right)^2 - \frac{1}{k} \left(\frac{b}{a}\right)^2 \left(\frac{b}{r}\right)^{k-1} \right\}$$

$$(5)$$

$$R_1 = - \frac{Pb^{k_1+1}}{2\pi k_1^3 D_r} \left\{ \frac{1}{r^{k_1-1}} - \frac{2a^{k_1}(1+\nu_\theta) - (1+\nu_\theta - k_1) b^{k_1} r^{1+k_1}}{(a^{2k_1} b^{k_1})(1+k_1+\nu_\theta)} + \right.$$

$$\left. + \frac{2(1+\nu_\theta)}{1+k_1+\nu_\theta} \frac{a^{k_1} - b^{k_1}}{a^{k_1} b^{k_1}} r - \frac{2k_1 r}{b^{k_1}} \log \frac{a}{r} \right\} \qquad (6)$$

$$R_m = \frac{Pb^2}{8\pi p_m q_m (p_m - q_m) D_r} \left\{ \frac{p_m - q_m}{q_m(1+2p_m+\nu_\theta)} \left[(1+\nu_\theta)\left(\frac{b}{a}\right)^{p_m-q_m-1} - \frac{p_m(1+\nu_\theta-2q_m)}{p_m+q_m}\left(\frac{b}{a}\right)^{p_m+q_m-1} \right]\left(\frac{r}{a}\right)^{p_m+q_m+1} + \right.$$

$$+ \left[\frac{(p_m-q_m)(1+\nu_\theta)}{q_m(1+2p_m+\nu_\theta)}\left(\frac{b}{a}\right)^{p_m+q_m-1} - \frac{p_m(1+2q_m+\nu_\theta)}{q_m(1+2p_m+\nu_\theta)}\left(\frac{b}{a}\right)^{p_m-q_m-1} \right]\left(\frac{r}{a}\right)^{p_m-q_m+1} +$$

$$\left. + \left(\frac{b}{r}\right)^{p_m-q_m-1} - \frac{p_m - q_m}{p_m + q_m}\left(\frac{b}{r}\right)^{p_m+q_m-1} \right\} \qquad (7)$$

and where

$$p_m^2 = \frac{1 + k^2 + 2g'm^2}{4} + \frac{k(m^2-1)}{2}$$

$$q_m^2 = \frac{1 + k^2 + 2g'm^2}{4} - \frac{k(m^2-1)}{2} \tag{8}$$

The deflection equation in the case of a load in the center is much simpler and is given as follows:

$$w = \frac{Pa^2}{4\pi(1-k^2)D_r} \left[\frac{(2 + k + \nu_\theta)(1 - k)}{(1 + k)(k + \nu_\theta)} + \left(\frac{r}{a}\right)^2 - \right.$$

$$\left. - \frac{2(1 + \nu_\theta)}{(1 + k)(k + \nu_\theta)} \left(\frac{r}{a}\right)^{k+1} \right] \tag{9}$$

$$w_{max} = \frac{Pa^2}{4\pi(1+k)^2 D_r} \frac{2 + k + \nu_\theta}{k + \nu_\theta} \tag{10}$$

This simplified form of the equation agrees with a result already in the literature [4].

To determine the compliances for thin sheets of cylindrically aeolotropic material, one may asymmetrically load a circular plate of such a material supported along its edge. Measurements of deflections normal to the plate surface can be made at a suitable number of points appropriately located.

The introduction of these measured deflections into the equations for deflection enables one to determine the elastic compliances simply by solving a set of simultaneous equations in the compliances. The compliances are physically determined by the nature of the material and are independent of the manner of loading and support.

EXPERIMENTAL PROCEDURE

The experimental apparatus required for the purpose of determining the elastic compliances is fortunately very simple and reliable. It consists of a suitable support for the anisotropic plate under study and a method of loading. The required point loading can be provided by means of a cantilever bar smoothly pinned at one end and loaded at the other. A movable fulcrum for applying the load is attached at any required point of the bar providing a concentrated load at any desired location on the experimental plate. The apparatus used in the present research is shown in Fig. 1. In that drawing there is also shown the deflection gages which are attached to a fixed supporting plate. In this manner the plate may be loaded continuously and the deflections accurately measured at pre-determined points. It is desirable always to obtain complete load deflection curves as shown in Fig. 2.

LOCATION OF EXPERIMENTALLY DETERMINED DEFLECTIONS

Although theoretically, it is possible to determine the compliances by solving four simultaneous equations in the deflection of a simply supported plate asymmetrically loaded, the computations become extremely lengthy and tedious as seen from equations like (7). On the other hand three of the constants can be determined from the symmetric loading and the fourth from the asymmetric.

If one measures the deflections of the plate at three points, say the center, the quarter point and the half point, and substitutes the values into equations (9) and (10), one obtains three equations in three unknowns:

$$W_c = \frac{w_c}{P} = \frac{a^2}{4\pi(1+k)^2 D_r} \frac{2+k+\nu_\theta}{k+\nu_\theta}$$

$$W_{1/4} = \frac{w_{1/4}}{P} = \frac{a^2}{4\pi(1-k^2)D_r} \left[\frac{(2+k+\nu_\theta)(1-k)}{(1+k)(k+\nu_\theta)} + \frac{1}{16} - \frac{2(1+\nu_\theta)}{(1+k)(k+\nu_\theta)} \left(\frac{1}{4}\right)^{k+1} \right]$$

$$W_{1/2} = \frac{w_{1/2}}{P} = \frac{a^2}{4\pi(1-k^2)D_r} \left[\frac{(2+k+\nu_\theta)(1-k)}{(1+k)(1+\nu_\theta)} + \frac{1}{4} - \frac{2(1+\nu_\theta)}{(1+k)(k+\nu_\theta)} \left(\frac{1}{2}\right)^{k+1} \right]$$

Solving equations above for D_r, ν_θ, and k obtain:

$$D_r = \frac{a^2}{4\pi(1+k)^2 W_c} \frac{2+k+\nu_\theta}{k+\nu_\theta} \tag{11}$$

$$\nu_\theta = -(2+k) + \frac{2(1+k)[1 - 4(1/4)^k]}{-16(1-k)[\frac{W_{1/4}}{W_c} - 1] + 1 + k - 8(1/4)^k}$$

or (12)

$$\nu_\theta = -(2+k) + \frac{2(1+k)[1 - 2(1/2)^k]}{-4(1-k)[\frac{W_{1/2}}{W_c} - 1] + 1 + k - 4(1/2)^k}$$

and

$$-W_{1/2} + 4W_{1/4} - 3W_c = [8W_{1/4} - 7.5W_c](1/2)^k + [3W_c - 4W_{1/2}](1/4)^k \tag{13}$$

Equation (13) can be put in the quadratic form and its solution is:

$$K = \frac{\log_{10}\left[\frac{-B \pm \sqrt{B^2 + 4AC}}{2A}\right]}{\log_{10} 1/2} \tag{14}$$

where

$$A = 3W_c - 4W_{1/2}$$

$$B = 8W_{1/4} - 7.5W_c \tag{15}$$

$$C = -W_{1/2} + 4W_{1/4} - 3W_c$$

Now since three of the elastic compliances have been determined, their values may be substituted into equation (4) providing a single equation for the determination of the shear modulus. However, a much simpler equation for calculating the shear modulus may be developed. For this purpose, measure deflections at six points and substitute in equation (4) giving six equations which may be added together giving a single resultant equation whose solution gives the value of the shear modulus. In order to obtain simplification the six points in question should be selected so that they are equidistant from the center of the plate and occur in pairs on opposite ends of diameters which are angularly disposed at $\pi/4$, $\pi/6$, and $\pi/3$ degrees from the reference diameter. It may be observed that the reference diameter is that on which the concentrated load is applied.

The angles mentioned above are obtained from the following:

$$w_{\theta_1} + w_{\theta_2} = 2R_0 + 2 \sum_{m=2,4,6}^{\infty} R_m \cos m\theta_1 \tag{16}$$

where $\theta_2 = (\theta_1 + \pi)$.

The sum of three pairs of measurements as disposed in equation (16) is:

$$\sum_{i=1}^{6} w_{\theta_i} = 6R_0 + 2 \sum_{m=2,4,6}^{\infty} R_m(\cos m\theta_1 + \cos m\theta_3 + \cos m\theta_5) \tag{17}$$

Now let the coefficient of R_2 be set equal to zero. That is:

$$\cos 2\theta_1 + \cos 2\theta_3 + \cos 2\theta_5 = 0 \tag{18}$$

A solution of equation (18) is

$$\theta_1 = \pi/4 \tag{19}$$

$$\theta_3 + \theta_5 = \pi/2 \quad \text{let} \quad \theta_3 = \pi/3 \quad \text{and} \quad \theta_5 = \pi/6 \tag{20}$$

Substituting the values of the angles as calculated above into equation (17) gives:

$$\sum_{i=1}^{6} w_i = 6R_0 - 4R_4 + 2R_{12} - 4R_{20} + \ldots \tag{21}$$

Equation (21) will be used to compute σ' which gives D_{k_1} the shear modulus. The locations of the deflection gages for the present purpose are shown in Fig. 3.

AN APPLICATION OF THE METHOD FOR THE CASE OF A CIRCULAR PLATE WITH CIRCULAR STIFFENERS

In order to illustrate the method developed in the present paper a circular plate with circular stiffeners was investigated. A sectioned view of the experimental plate is shown in Fig. 4.

It is obvious that if the stiffening rings were to be kept constant in cross-section, the rigidity of the plate would increase as we approach the center. Therefore, to make the stiffened plate approximately homogeneous, i.e. to have the rigidities independent of the radius and the angle, the size of the ribs should be reduced as the center is approached. This can be achieved either by changing the width or depth of the rib or both. In the test plate of this experiment, the width of the rib was kept constant and the depth reduced according to an equation derived by Dr. Noritaka Ando while he was associated with Rensselaer Polytechnic Institute as a post-doctoral scientist.

Furthermore, the ribs were cut gradually and deflections measured after every cut until a smooth curve of the deflections was obtained. With the last cut the depth of the ribs reached the theoretically calculated values. The depth of the stiffeners at the center of the plate and at the support were kept at zero and one half inch respectively. With this geometric configuration the plate was considered close enough to being homogeneous. A cross-section of the test plate thus formed is shown in Fig. 5.

A curve using cylindrical aeolotropic theory was fitted to the experimental data. Table 1 shows a wide range of theoretical deflections based on assumed values for k, ν_θ,

and D_r . It appears that the following constants give the best fit

$k = 1.50$ $\nu_\theta = 0.5$

$D_r = 1.15 \times 10^4$ $\sigma' = 1.50$

and the corresponding elastic compliances in terms of S_{ij} are:

$h^3/S_{11} = 12.27 \times 10^4$

$h^3/S_{22} = 27.60 \times 10^4$

$h^3/S_{12} = -55.20 \times 10^4$

$h^3/S_{66} = 6.90 \times 10^4$

where h is the thickness of the equivalent cylindrically aeolotropic plate. It is not necessary to compute the value of h , since it does not enter explicitly in the equations for the deflection of the plate.

For purpose of comparison the elastic constants of the experimental plate are compared with those of two isotropic plates as shown in Table 2.

Plates A and C are fictitious plates. They are assumed to be of uniform thickness and from aluminum with the following properties:

E = Young's modulus = 10.5×10^6 psi

ν = Poisson's ratio = 1/3

G = shear modulus = 3.94×10^6 psi

Thickness of these plates are assumed to be:

Thickness of plate A = 0.218 in.

Thickness of plate C = 0.718 in.

Plate B is the stiffened plate under study. Obviously the compliances for plate B should lie between those for plate A and plate C. The reason for this is that the thickness of plate A is the same as that for plate B without stiffeners, and the thickness of plate C is the same as the gross thickness of plate B including the stiffeners.

DISCUSSION AND CONCLUSIONS

As a result of the research reported in the present paper it is concluded that the proposed method is satisfactory for determining the elastic compliances of homogeneous cylindrically aeolotropic circular plates. The method may be used as well for circular plates with circular stiffeners as for uniformly thick plates of aeolotropic material.

It is further considered that the method, although based on the use of a single experimental plate, provides results which may be as useful as those obtained by one of the authors [5] for orthogonally stiffened rectangular plates. Because

the latter method utilizes two rectangular plates for the flexural rigidities and a single square plate for the shear rigidity it does possess some advantage in ease of application and reliability in determination of the compliances. The reason is that it provides independent means for determination of each of the flexural rigidities, as well as an independent means for determination of the shear rigidity.

It cannot be overemphasized that the condition of homogeneity for the stiffened plates must be treated with special care and the stiffeners proportioned to provide such a condition. Further study of this aspect of the problem is suggested.

It is desirable in the future to have experiments performed on plates which have actual stiffeners as close as possible to the center of the plate. In the present investigation it was arbitrarily predetermined to fix the size of the outermost stiffener and then reduce the size as the center was approached so that the innermost stiffener was of negligible size. The result of this procedure is to overemphasize the isotropic nature of the region around the center of the plate. Such a condition of localized isotropy has been discussed by Carrier [3].

Further research should also include stiffened plates which more intensively contrast the flexural rigidities in the two principal directions.

REFERENCES

1. A. M. Sen Gupta, "Bending of a Cylindrically Aeolotropic Circular Plate with Eccentric Load", Journal of Applied Mechanics, Vol. 19, No. 1, March 1952, pp. 9-12.

2. W. H. Hoppmann II and Joshua Greenspon, "An Experimental Device for Obtaining Elastic Rotational Constraint on Boundary of a Plate", Proceedings of the Second U. S. National Congress of Applied Mechanics, 1954, pp. 187-191.

3. G. F. Carrier, "The Bending of the Cylindrically Aeolotropic Plate", Journal of Applied Mechanics, Vol. 11, No. 3, September 1944, pp. 129-133.

4. S. G. Lekhnitskii, "Anizotropnye Plastinki", Moscow-Leningrad: Gostekhizdat. 2nd Ed., 1957, pp. 329-332.

5. W. H. Hoppmann II, "Elastic Compliances of Orthogonally Stiffened Plates", Proceedings of the Society of Experimental Stress Analysis, 14, No. 1, 1956, pp. 137-144.

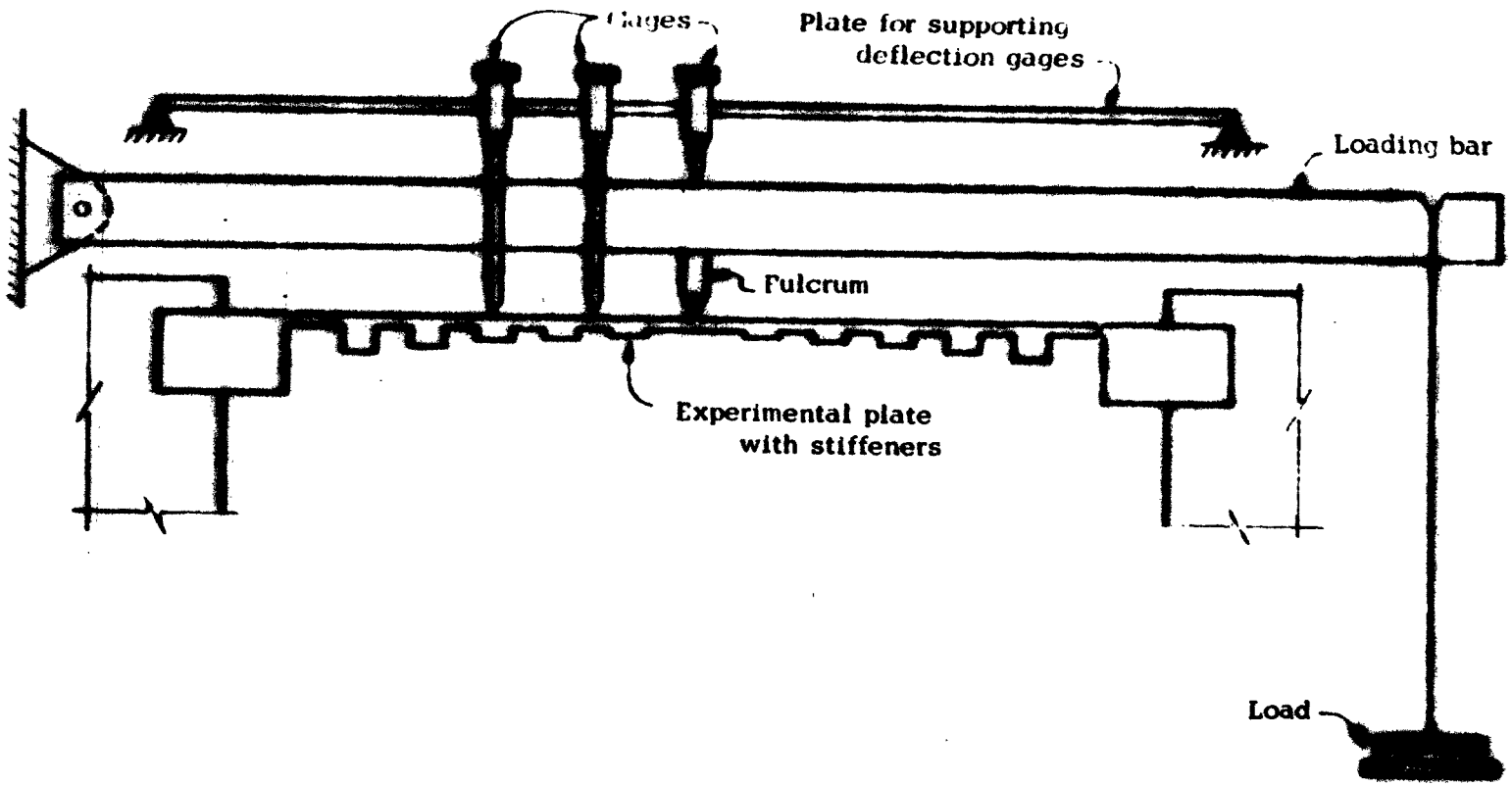

Fig.1 Deflection Experiment for Stiffened Plate

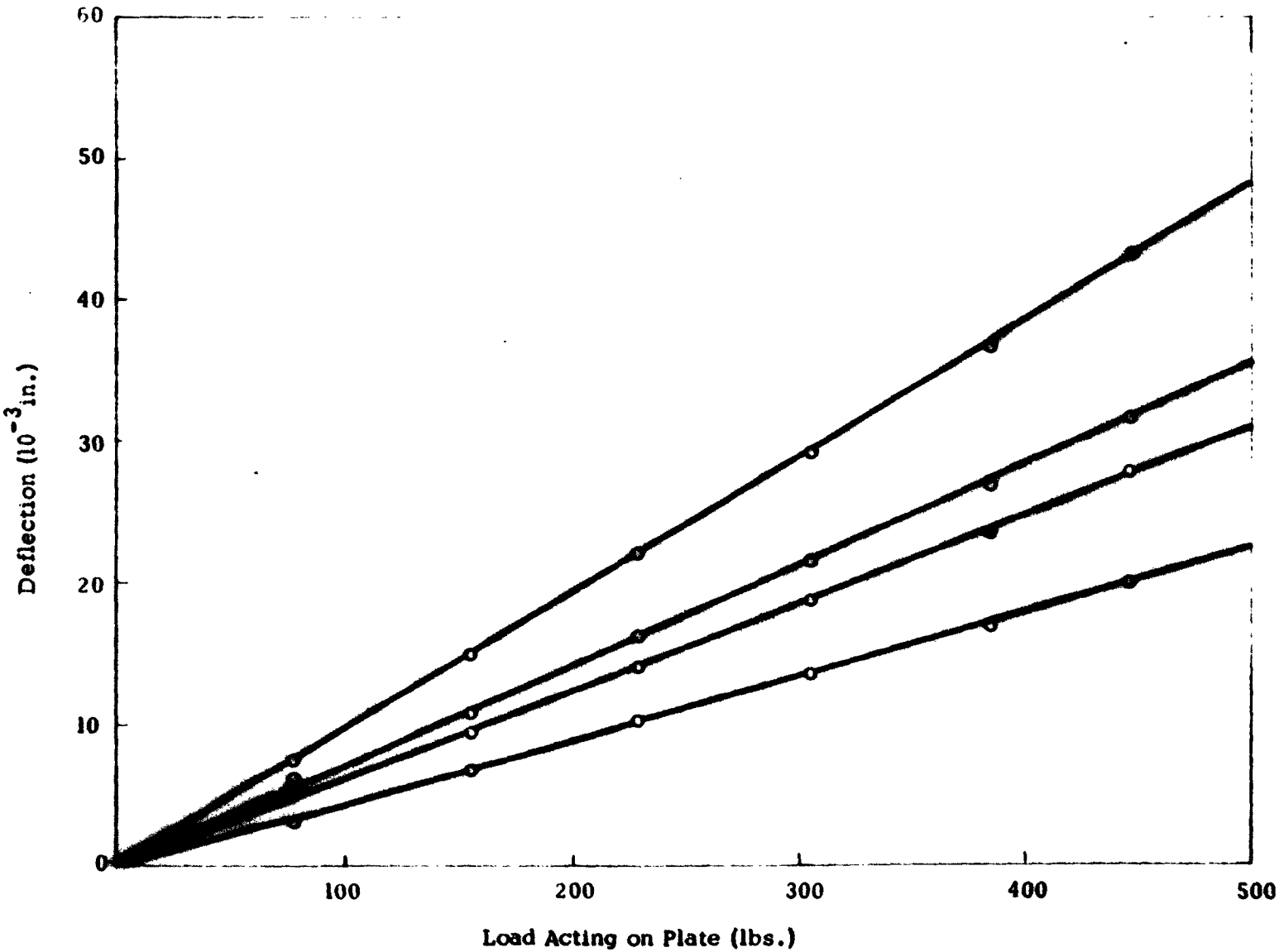

Fig. 2 Typical Load Deflection Curves for Stiffened Plate

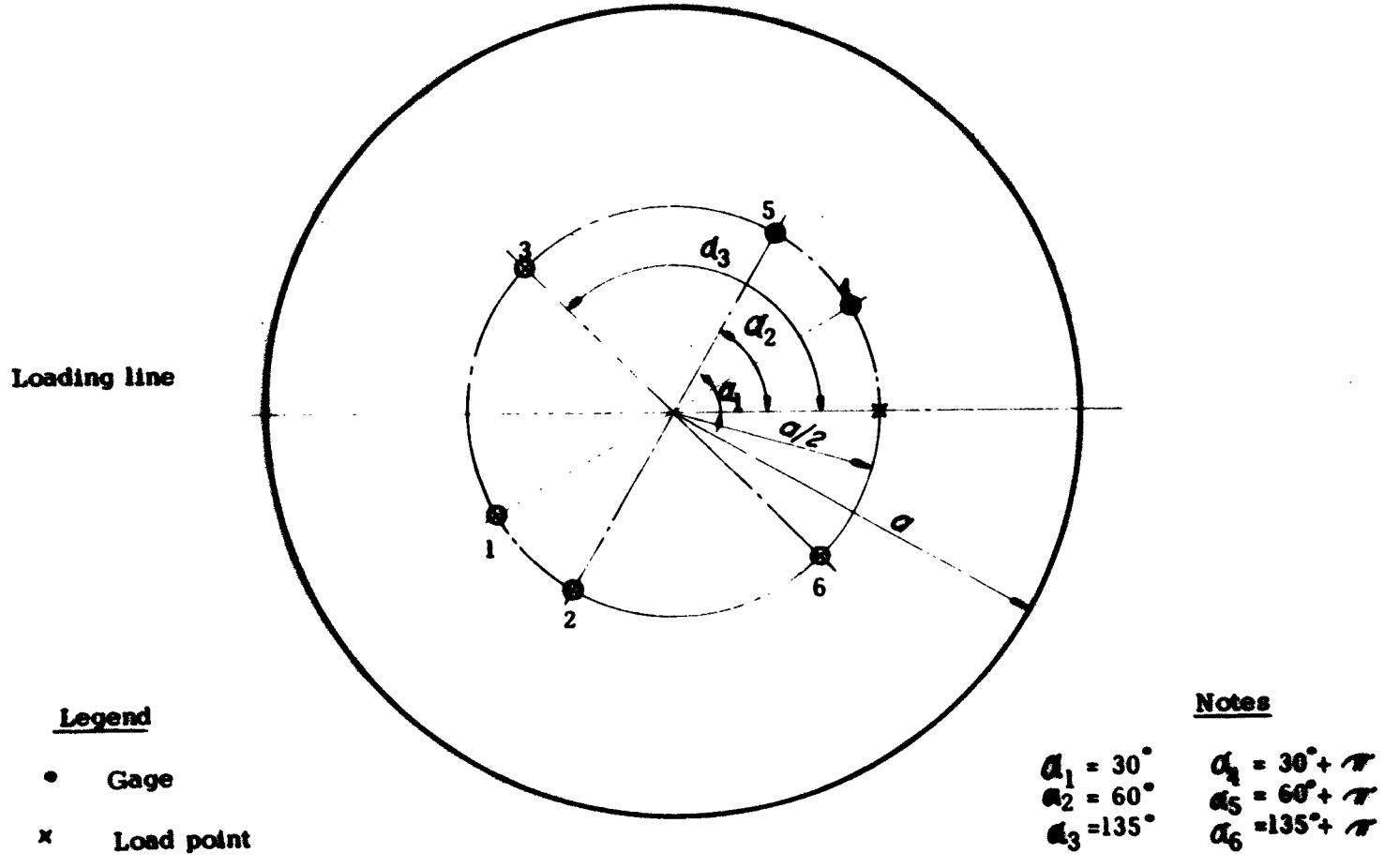

Fig. 3 Location of Gages for Asymmetric Loading

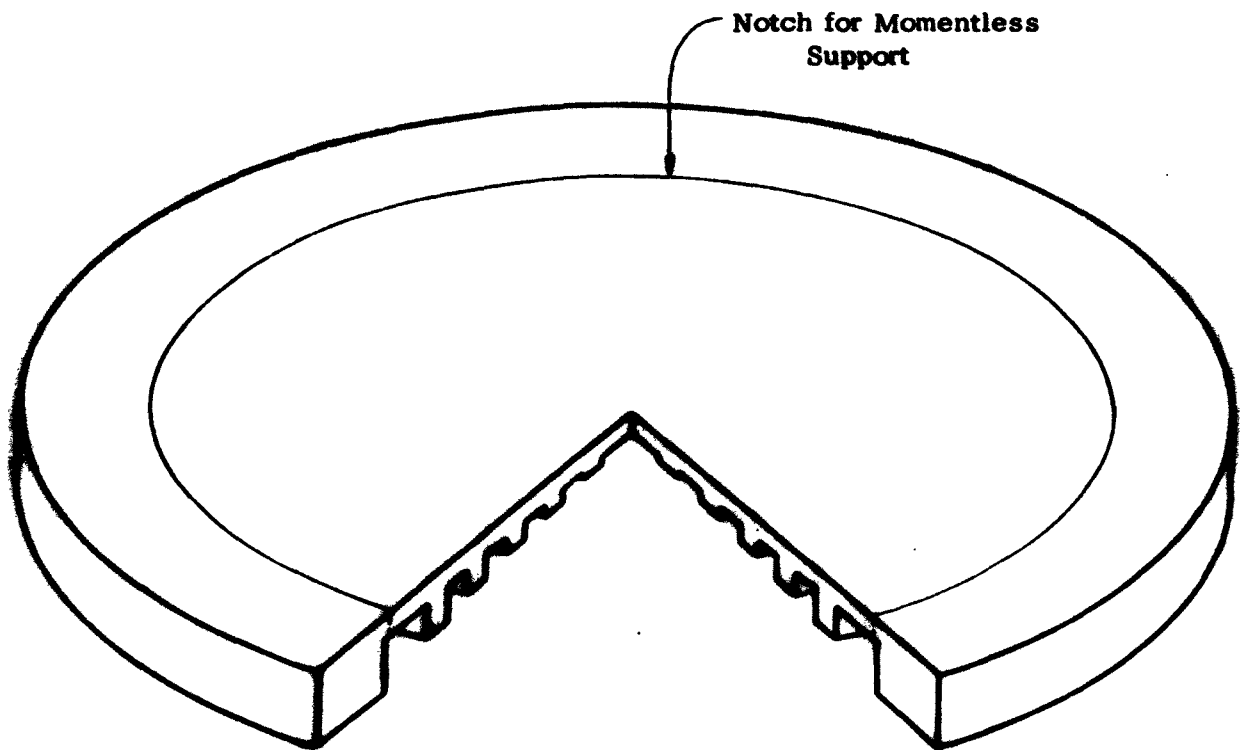

Fig.4 Sectioned View of Experimental Plate with Stiffeners

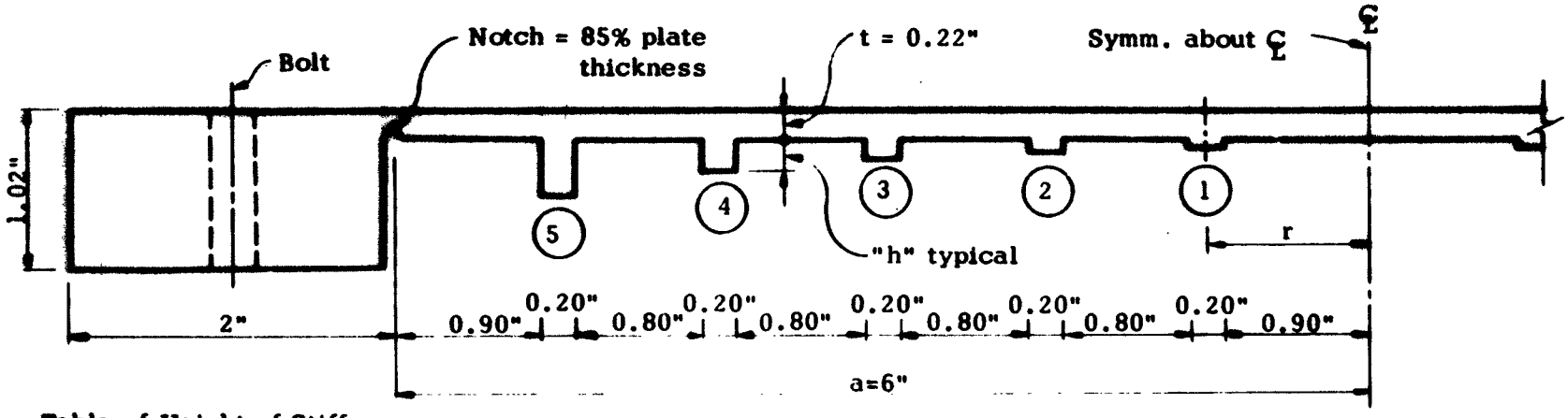

Table of Height of Stiffeners

Stiffener No.	Height "h" in inches
1	0.019
2	0.051
3	0.104
4	0.192
5	0.329

Fig. 5 Diametral Section of Stiffened Plate

Table 1

Theoretical Deflection Load Data with Concentrated Load at Center of Simply Supported Plate and Corresponding Calculated Elastic Compliances

Elastic Constants			Deflections - $\frac{w}{P} \times 10^6$				Elastic Compliances		
K	ν_θ	$D_r \times 10^{-4}$	W_c	$W_{1/4}$	$W_{1/3}$	$W_{1/2}$	$\frac{h^3}{S_{11}} \times 10^{-4}$	$\frac{h^3}{S_{22}} \times 10^{-4}$	$\frac{h^3}{S_{12}} \times 10^{-4}$
.25	.22	10.70	89.0	70.8	63.2	47.3	28.97	1.81	- 8.23
.50	.40	4.75	86.4	70.5	63.2	47.5	20.52	5.13	- 12.82
	.30	5.20	85.7	70.4	63.2	47.8	39.94	9.98	- 33.27
.75	.70	2.64	84.3	70.5	63.3	47.6	4.09	2.30	- 3.29
1.00	.75	1.88	81.7	70.0	63.3	48.0	9.88	9.88	- 13.17
	.75	1.60	96.0	82.2	74.3	56.5	8.40	8.40	- 11.20
1.25	1.00	1.33	80.4	69.8	63.3	48.2	5.76	9.00	- 9.00
	.50	1.50	80.9	71.0	65.0	50.4	15.12	23.63	- 47.25
1.50	.75	1.08	80.1	71.1	65.0	50.5	9.72	21.87	- 29.16
	.50	1.15	79.7	71.0	65.2	51.0	12.27	27.60	- 55.20
1.75	.35	0.95	77.9	70.2	64.9	51.5	10.94	33.52	- 95.76

Table 2

Elastic Compliances for Cylindrically Aeolotropic Plates

Plate	$\frac{h^3}{S_{11}} \times 10^{-4}$	$\frac{h^3}{S_{12}} \times 10^{-4}$	$\frac{h^3}{S_{22}} \times 10^{-4}$	$\frac{h^3}{S_{66}} \times 10^{-4}$
A	10.88	- 32.64	10.88	4.08
B	12.27	- 55.20	27.60	6.90
C	388.65	-1165.95	388.65	145.75