UNCLASSIFIED

AD 414824

DEFENSE DOCUMENTATION CENTER

FOR

SCIENTIFIC AND TECHNICAL INFORMATION

CAMERON STATION, ALEXANDRIA, VIRGINIA

UNCLASSIFIED

NOTICE: When government or other drawings, specifications or other data are used for any purpose other than in connection with a definitely related government procurement operation, the U. S. Government thereby incurs no responsibility, nor any obligation whatsoever; and the fact that the Government may have formulated, furnished, or in any way supplied the said drawings, specifications, or other data is not to be regarded by implication or otherwise as in any manner licensing the holder or any other person or corporation, or conveying any rights or permission to manufacture, use or sell any patented invention that may in any way be related thereto.

414824

63-4-5

CATALOGED BY DDC
AS AD No. 414824

TECHNICAL NOTE R-37

A FORTRAN PROGRAM TO CALCULATE BOOST PHASE TRAJECTORIES

Prepared By

John B. Middleton, Jr.

March, 1963

BROWN ENGINEERING COMPANY INC.
HUNTSVILLE, ALABAMA

DDC
RECEIVED
AUG 31 1963
TISIA D

TECHNICAL NOTE R-37

A FORTRAN PROGRAM TO CALCULATE BOOST PHASE TRAJECTORIES

March 1963

Prepared For

DIRECTORATE OF MISSILE INTELLIGENCE
ARMY MISSILE COMMAND

By

MISSILE AND SPACE INTELLIGENCE BRANCH
SCIENTIFIC RESEARCH LABORATORIES
BROWN ENGINEERING COMPANY, INC.

Contract DA-01-009-ORD-1068

Prepared By

John B. Middleton, Jr.
Research Physicist

ABSTRACT

This computer program provides launch to burnout, two-dimensional, point mass trajectories. It is a very flexible program in that it may be based on a large variety of conditions used to control the program. The standard atmospheric conditions and gravitational field are included.

The two versions of this program are written in FORTRAN II. The most flexible version, SP11A, is card tape approach, but it requires a longer "run" time. The SP11B is the all-card approach. It can be used on either the IBM 1410 computer or the IBM 1620 equipped to use FORTRAN II.

Approved By:

Charles F. Ostner
Chief
Missile and Space Intelligence Branch

LIST OF SYMBOLS

Symbol	Computer Symbol	
m_o	BIWT	Total initial mass - slugs
V_L	VL	Longitudinal velocity - ft/sec
L	AL	Missile length - ft
A	A	Vehicle reference area - ft^2
D	D	Diameter of missile - ft
dt	DELT	Computation interval - sec
θ	THETA	Angle of the velocity vector with respect to the horizontal measured counter-clockwise - radians
T	THRUST	Thrust in pounds force
g	GRAV	Acceleration of gravity as a function of altitude
$\dot{w}$	RMAS	Propellant weight flow rate - lb/sec
m_n	MASS	Mass at a specific time - slugs
t	T	Time of flight - sec
Ma	AM	Mach number
C_s	SOS	Sonic velocity - ft/sec
P_D	DPW	Dynamic pressure due to wind - lb/ft^2
V_W	VW	Wind velocity as f (Y) - ft/sec

List of Symbols (Cont.)

Symbol	Computer Symbol	
ρ	DEN	Density of air as f(Y) - slugs/ft^3
A_e	AE	Exposed area for wind effect consideration - ft^2
A_D	AD	Acceleration due to drag - ft/sec^2
A_W	AW	Acceleration due to wind - ft/sec^2
A_T	AT	Acceleration due to thrust - ft/sec^2
A_x	AX	Acceleration in the X direction - ft/sec^2
A_y	AY	Acceleration in the Y direction - ft/sec^2
A_L	BL	Acceleration along the trajectory - ft/sec^2
V_x	VX	Velocity in the X direction - ft/sec
V_y	VY	Velocity in the Y direction - ft/sec
V_L	BVL	Velocity along the trajectory - ft/sec
X	X	Distance along plane tangent to earth at launch point - ft
Y	Y	Distance perpendicular to plane tangent to earth at launch point - ft
L	CVL	Slant range - ft

List of Symbols (Cont.)

Symbol	Computer Symbol	
Range	ANM	Range along earth's surface - NM
α	ALPHA	Thrust alignment angle - radians

TABLE OF CONTENTS

	Page No.:
INTRODUCTION	1
ANALYSIS	2
Initial Conditions	2
Development of Equations	5
RESULTS	9
Information Flow Diagram	9
FORTRAN Statements	23
SP11A Version	23
SP11B Version	29

INTRODUCTION

This computer program was developed as a tool for studying boost phase trajectories. It is used to investigate the interaction of the basic ballistic parameters such as thrust, mass, drag, gravity, and wind. The present program allows only two degrees of freedom of a point mass. However, a subsequent program will provide for four degrees of freedom.

The output of this program includes time of flight, range, altitude, acceleration, velocity, flight path angle and other missile and trajectory-related variables. Because of the relatively short distance traveled and the short flight times associated with the launch phase, it was not considered necessary to use an earth-fixed geocentric co-ordinate system. The two-dimensional co-ordinate system used in the program has its origin at the launch point. The X-axis represents range and is tangent to the earth's surface at the launch site. The Y-axis represents altitude and is normal to the earth's surface at the launch site.

ANALYSIS

Initial Conditions

Almost any combination of initial conditions can be used. In addition to standard trajectories based on surface-launched missiles having zero initial velocities, this program can be used to calculate second stage boost trajectories or air-launched missiles and other trajectories based on non-standard conditions.

The items of information to be punched on IBM cards are:

Items	Comments
RMAS	Propellant weight flow rate before the thrust reduction period - lb/sec
BIWT	Initial mass - slugs
FWT	Missile weight at burnout - lb
VL	Initial longitudinal velocity - ft/sec
AL	Missile length - ft
A	Vehicle Reference Area - ft^2
TIME	Time thrust reduction begins - sec
DELT	Computation interval - sec
D	Diameter of missile - ft
THETAO	Angle of the velocity vector with respect to the horizontal measured counter-clockwise at launch - radians

Items	Comments
AK1	Angle of the velocity vector with respect to the horizontal measured counter-clockwise at burnout - radians
AK4	Pitch angle to be imposed on the missile after time (TP) - radians
THRUST	Initial thrust - lb
ALTO	Launch altitude above earth's surface - ft
DRAGO	Initial drag - lb
ALAM	First limit on drag coefficient curve
G	Acceleration due to gravity at launch altitude - ft/sec^2
ALAMI	Second limit on drag coefficient curve
TP	Time to impose the pitch angle AK4
FTIME	Time of burnout - sec (If no thrust reduction period is desired, let FTIME and TIME be the same.)
ALA	The longitudinal acceleration to be imposed on the missile during the thrust reduction period - ft/sec^2
FRMAS	Propellant weight flow rate during the thrust reduction period - lb/sec
SS1	Control switch. If SS1 $\geq$ 0, use a thrust curve as f(time) on tape drive 6. If SS1>0, either a constant thrust or a computed thrust will be used. For this decision check THRU and TTTT.
SS2	Control switch. If SS2 > 0, use a wind profile curve as a f(altitude) on tape drive 5. If SS2 $\leq$ 0, no wind consideration will be made.

Items	Comments
SS3	Control switch. If SS3 > 0, use a pitch program with changes in θ as a f(time) on tape drive 7. If SS3 $\leq$ 0, θ will be computed.
SS4	Control switch. If SS4 > 0, use an acceleration curve as a f(time) on tape drive 8. If SS4 $\leq$ 0, the acceleration will be calculated.
SS5	Control switch. If SS5 > 0, time, A_L, V_L, Y and X will be punched in a card for each computation interval.

For the version of the program which utilizes tapes as well as cards, the items of information to be stored on magnetic tapes are as follows:

1. Drag coefficient as a function of Mach number
2. Wind velocity profile as a function of altitude
3. Acceleration as a function of time
4. Thrust as a function of time
5. Flight path angle as a function of time

Development of Equations

1. Thrust

(a) When thrust is used to drive the program, it is used either as a constant or a tabulated variable. Input into the program is based on the following relationship:

$$A_T = T/m_n \tag{1}$$

where:

A_T = Acceleration due to thrust

T = Thrust

m_n = Mass at any time

(b) When a pre-programmed longitudinal acceleration is used to drive the program, thrust becomes an output and is described by equation (2):

$$T = \frac{m_o - \dot{m}t}{\cos \alpha} (A_L + A_D + g \sin \theta - A_W \cos \theta) \tag{2}$$

where:

m_o = Initial mass

$\dot{m}$ = Mass flow rate

t = Burn time

α = Thrust alignment

A_L = Longitudinal acceleration

A_D = Deceleration due to drag

g = Acceleration due to local gravity

θ = Flight path angle

A_W = Acceleration due to wind

2. Drag

Drag is introduced into the program by means of the deceleration equation below:

$$A_D = \frac{\frac{1}{2} \rho V_L^2 C_D A}{m_n} \tag{3}$$

where:

ρ = local air density

V_L = longitudinal velocity

C_D = drag coefficient (f(Ma)

A = reference area

The drag coefficient function is based on a zero angle of attack. It is a function of Mach number and is included in the program on tape or as a subroutine depending on the program version.

3. Flight Path

The program is set up in such a way that flight path can be an input as a function of altitude or an output based on equation (4):

$$\theta = \tan^{-1} V_y / V_x \tag{4}$$

4. Wind Effects

Accelerations which are a function of wind are included in the program by way of the relationship described below:

$$A_W = \frac{P_D A_E}{m_n} \tag{5}$$

where:

P_D = dynamic pressure = $\frac{\rho V_W^2}{2}$

A_E = exposed area = $L D \sin \theta$

V_W = velocity of the wind

L = length of missile

D = diameter of the missile

5. Composite Accelerations

Summations of the accelerations along the X and Y co-ordinates are obtained from equations (6) and (7).

$$A_X = A_T \cos (\theta - \alpha) - A_D \cos \theta + A_W \tag{6}$$

$$A_Y = A_T \sin (\theta - \alpha) - A_D \sin \theta - g \tag{7}$$

6. Longitudinal Acceleration

Longitudinal Acceleration is then a resultant of the X and Y accelerations as described by equation (8):

$$A_L = A_X \cos \theta + A_Y \sin \theta \tag{8}$$

7. Velocities

Velocities are obtained from integration of the various accelerations.

$$V_X = \int_0^t A_X \, dt \tag{9}$$

$$V_Y = \int_0^t A_Y \, dt \tag{10}$$

$$V_L = \int_0^t A_L \, dt \tag{11}$$

8. Distance Traveled

The X and Y co-ordinates and the longitudinal distance traveled are obtained by integration of the corresponding velocities.

$$X = \int_0^t V_X \, dt \tag{12}$$

$$Y = \int_0^t V_Y \, dt \tag{13}$$

$$L = \int_0^t V_L \, dt \tag{14}$$

INFORMATION FLOW DIAGRAM

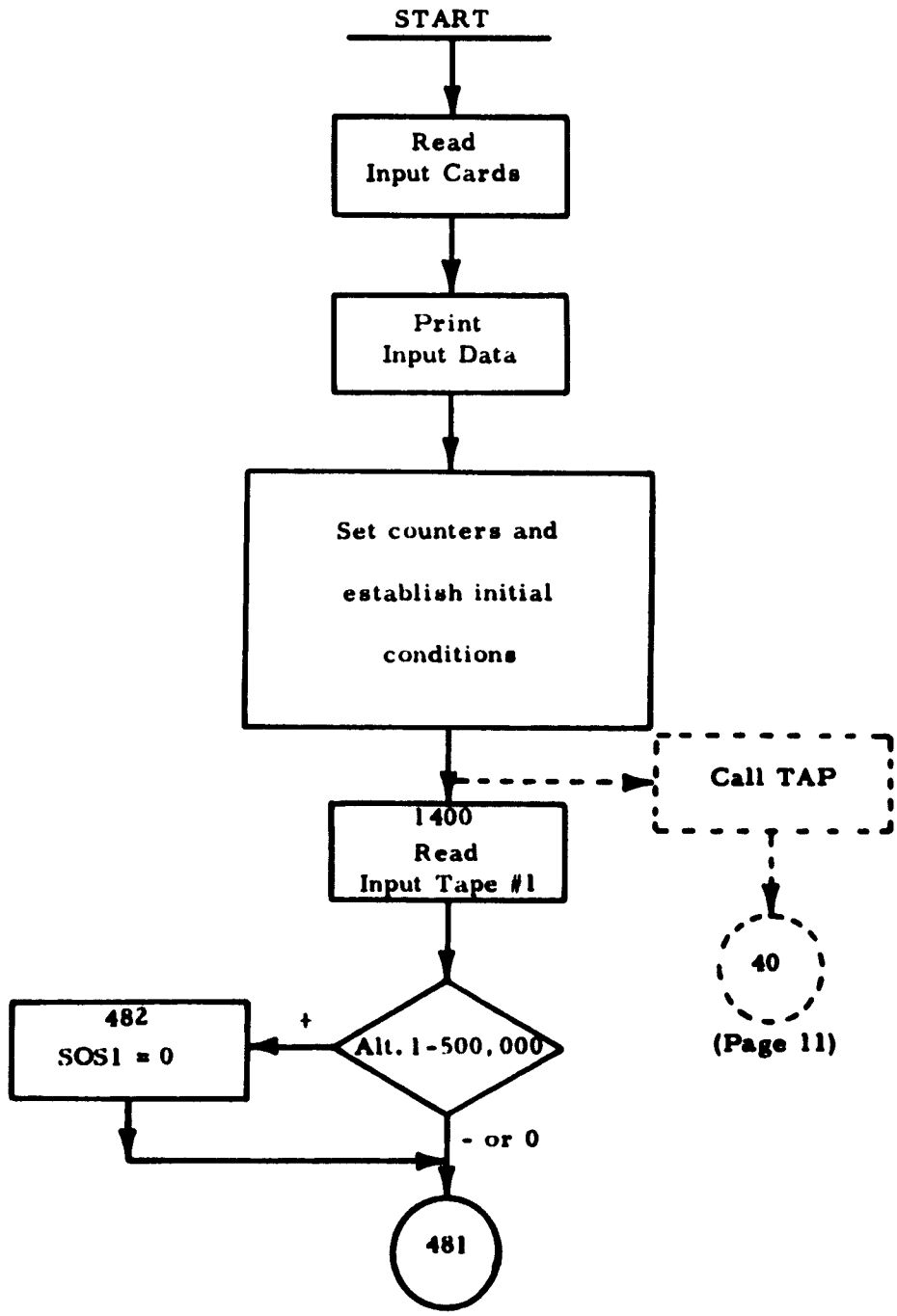

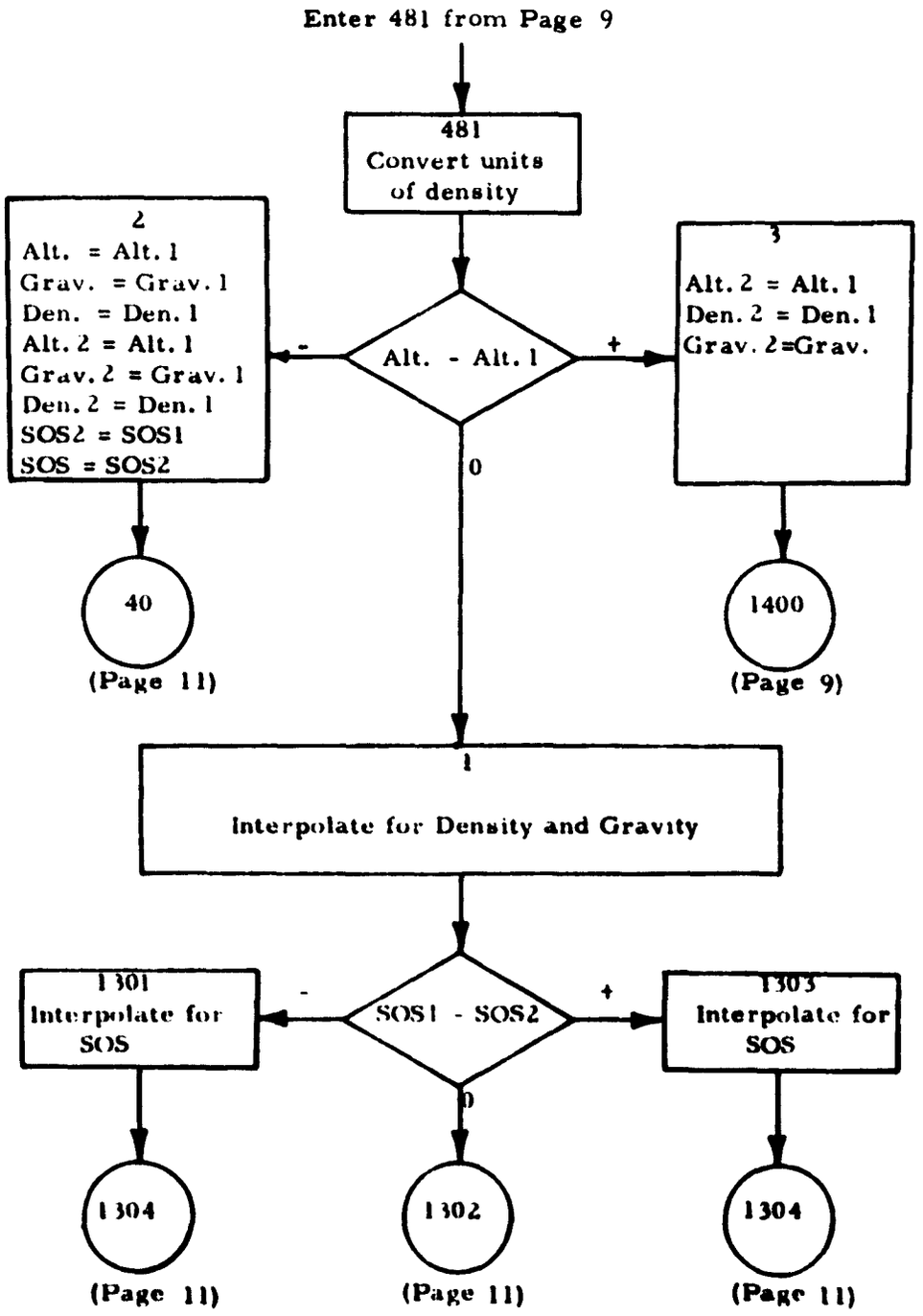
Enter 481 from Page 9
481
Convert units of density
2
Alt. = Alt. 1
Grav. = Grav. 1
Den. = Den. 1
Alt. 2 = Alt. 1
Grav. 2 = Grav. 1
Den. 2 = Den. 1
SOS2 = SOS1
SOS = SOS2
Alt. - Alt. 1
-
+
0
3
Alt. 2 = Alt. 1
Den. 2 = Den. 1
Grav. 2=Grav.
40
(Page 11)
1400
(Page 9)
1
Interpolate for Density and Gravity
1301
Interpolate for SOS
SOS1 - SOS2
-
+
0
1303
Interpolate for SOS
1304
(Page 11)
1302
(Page 11)
1304
(Page 11)

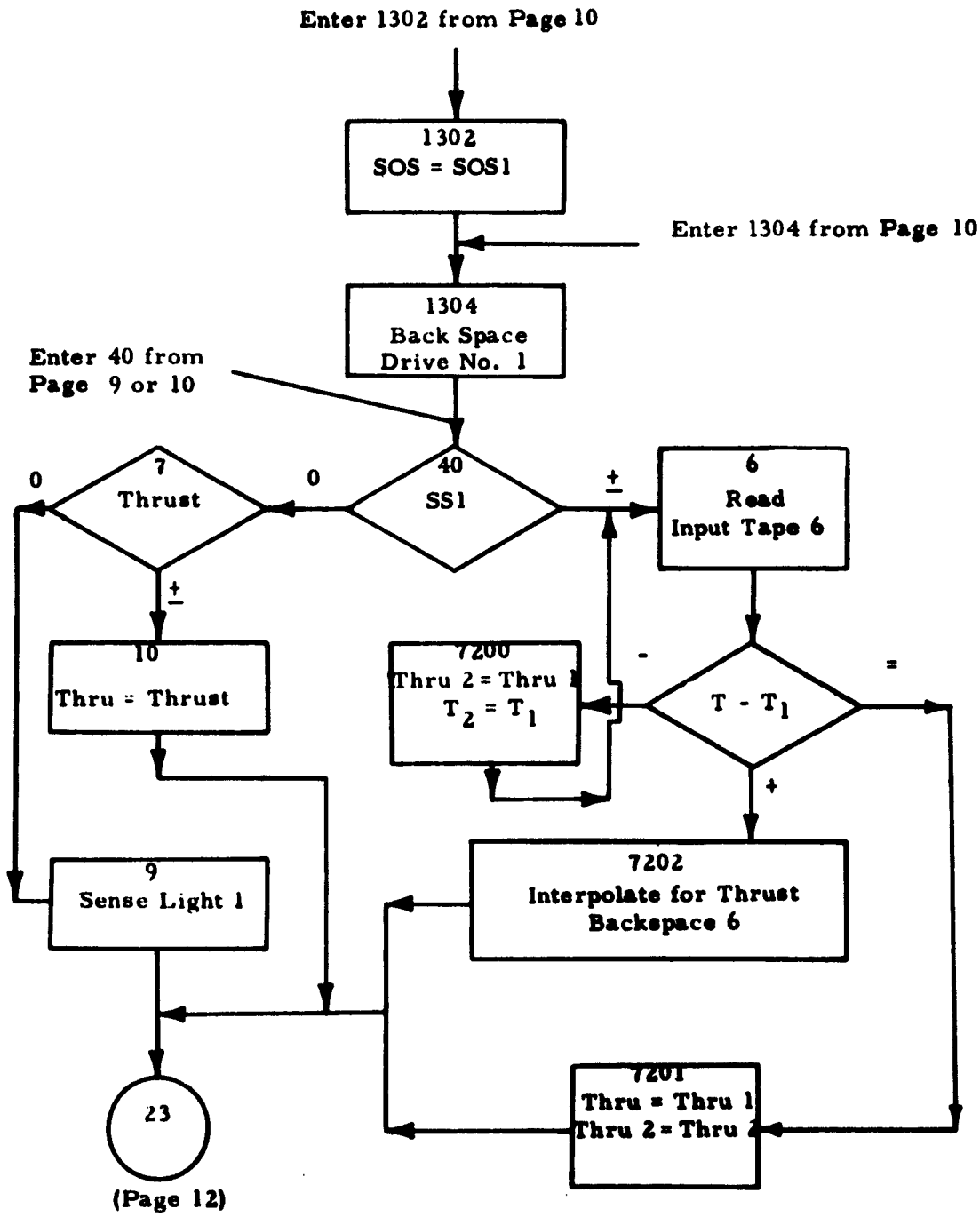
Enter 1302 from Page 10
1302
SOS = SOS1
Enter 1304 from Page 10
1304
Back Space
Drive No. 1
Enter 40 from
Page 9 or 10
40
SS1
0
±
7
Thrust
0
±
6
Read
Input Tape 6
10
Thru = Thrust
7200
Thru 2 = Thru 1
$T_2 = T_1$
-
=
$T - T_1$
+
9
Sense Light 1
7202
Interpolate for Thrust
Backspace 6
7201
Thru = Thru 1
Thru 2 = Thru 2
23
(Page 12)

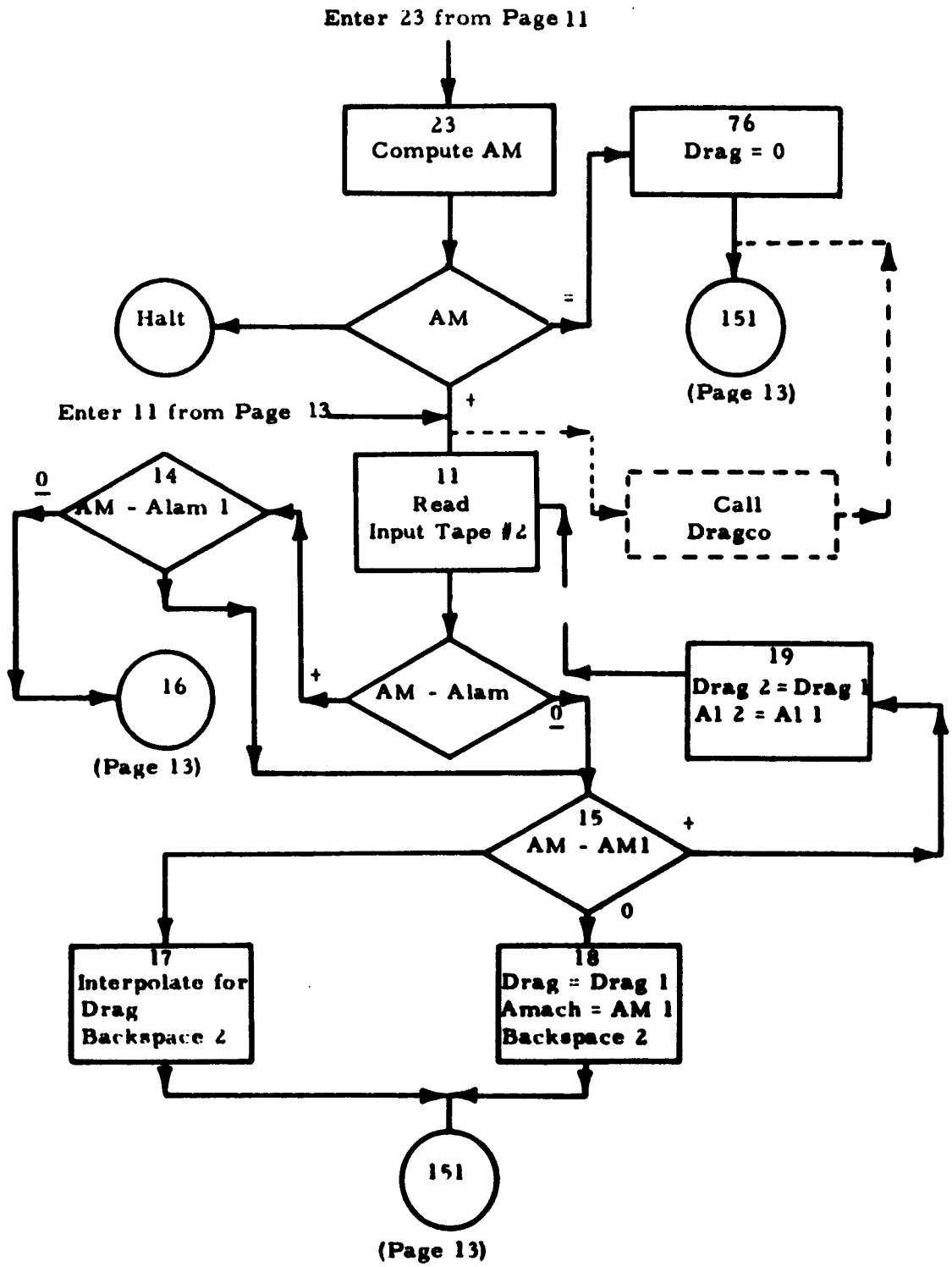
Enter 23 from Page 11
23
Compute AM
76
Drag = 0
Halt
AM
=
151
(Page 13)
+
Enter 11 from Page 13
0
14
AM - Alam 1
11
Read
Input Tape #2
Call
Dragco
16
(Page 13)
+
AM - Alam
0
19
Drag 2 = Drag 1
Al 2 = Al 1
15
AM - AM1
+
0
17
Interpolate for
Drag
Backspace 2
18
Drag = Drag 1
Amach = AM 1
Backspace 2
151
(Page 13)

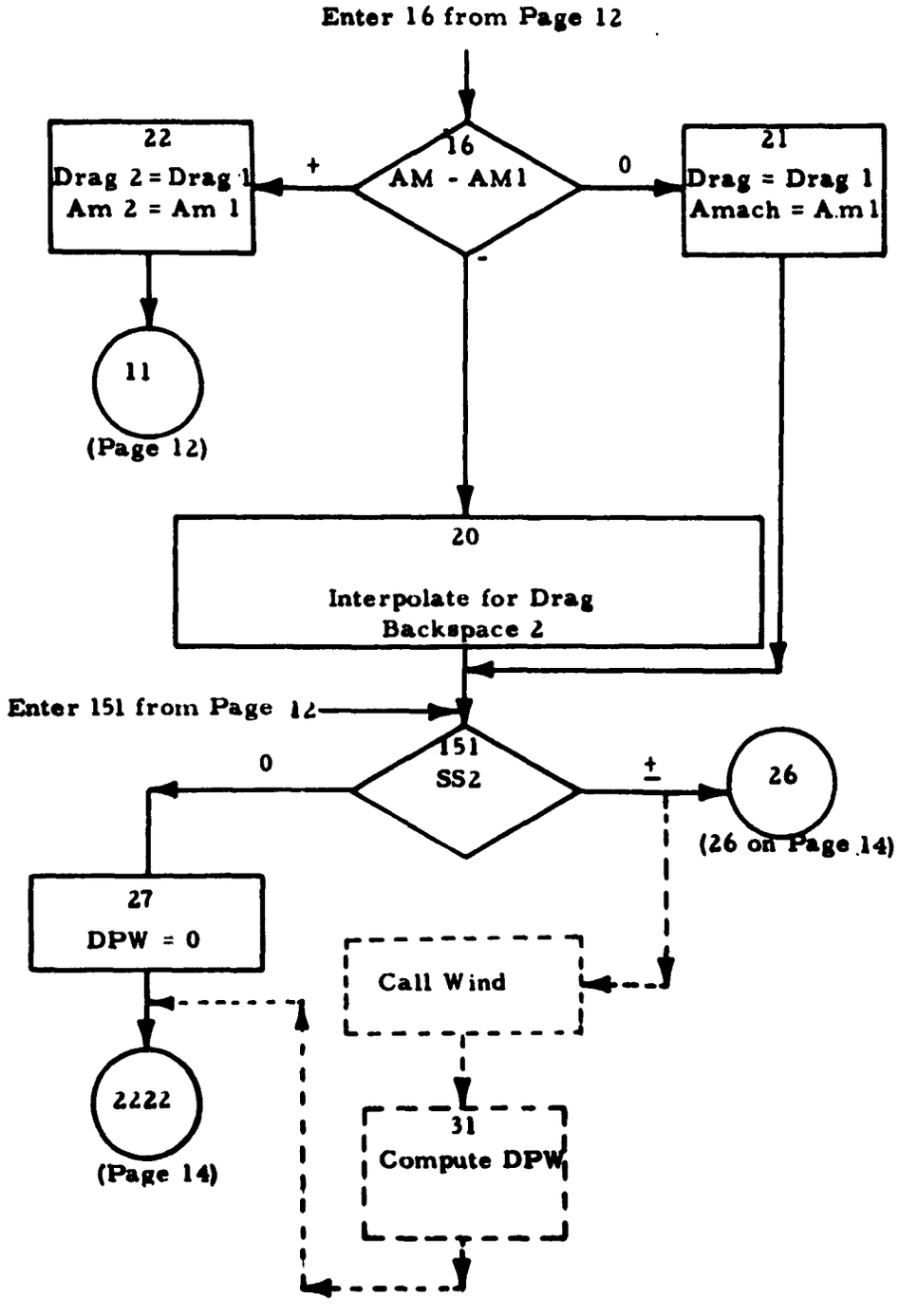
Enter 16 from Page 12
16
AM - AM1
+
0
-
22
Drag 2 = Drag 1
Am 2 = Am 1
21
Drag = Drag 1
Amach = Am 1
11
(Page 12)
20
Interpolate for Drag
Backspace 2
Enter 151 from Page 12
151
SS2
0
±
26
(26 on Page 14)
27
DPW = 0
Call Wind
2222
(Page 14)
31
Compute DPW

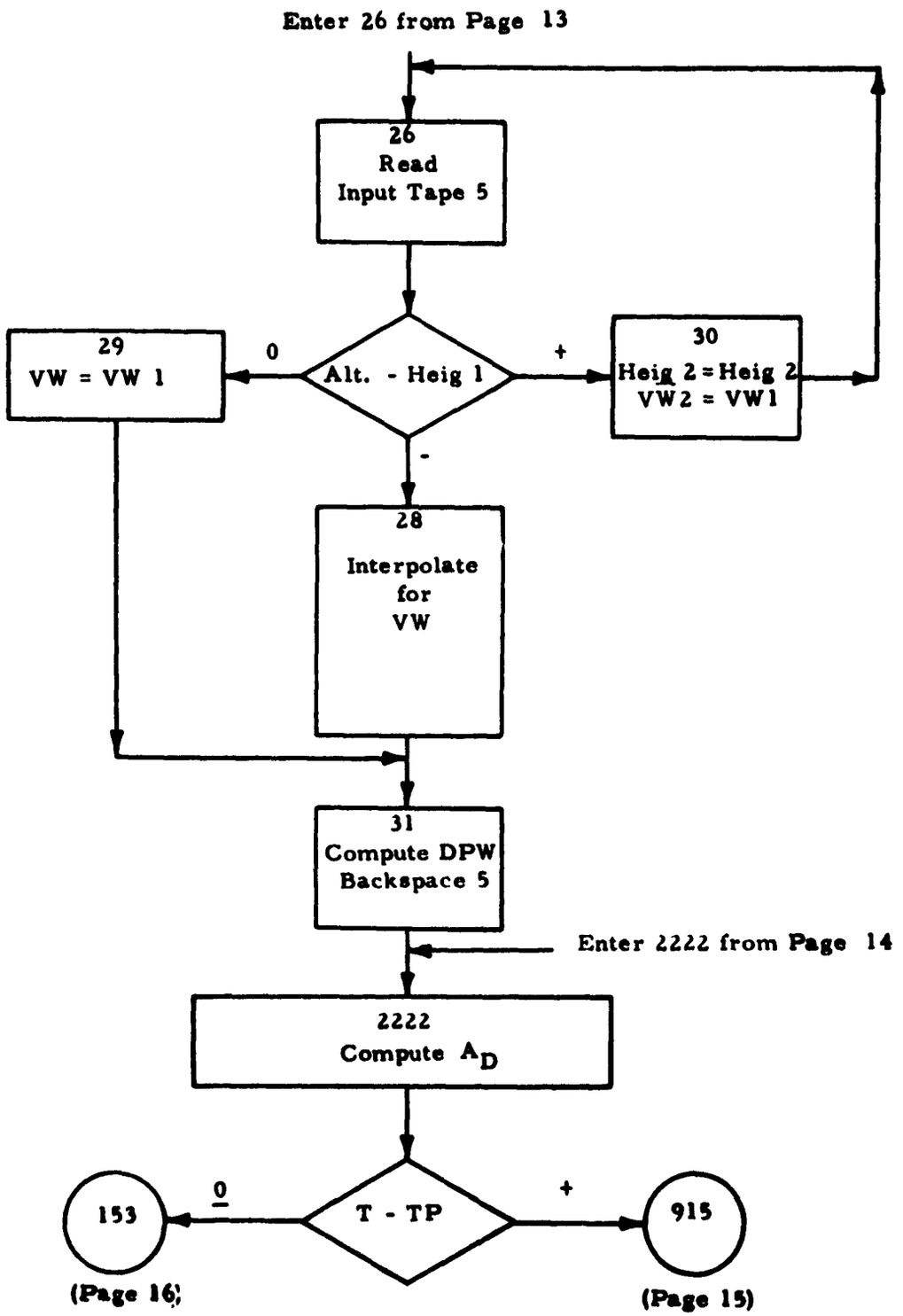
Enter 26 from Page 13
26
Read
Input Tape 5
29
VW = VW 1
0
Alt. - Heig 1
+
30
Heig 2 = Heig 2
VW2 = VW1
-
28
Interpolate
for
VW
31
Compute DPW
Backspace 5
Enter 2222 from Page 14
2222
Compute A_D
153
0
T - TP
+
915
(Page 16)
(Page 15)

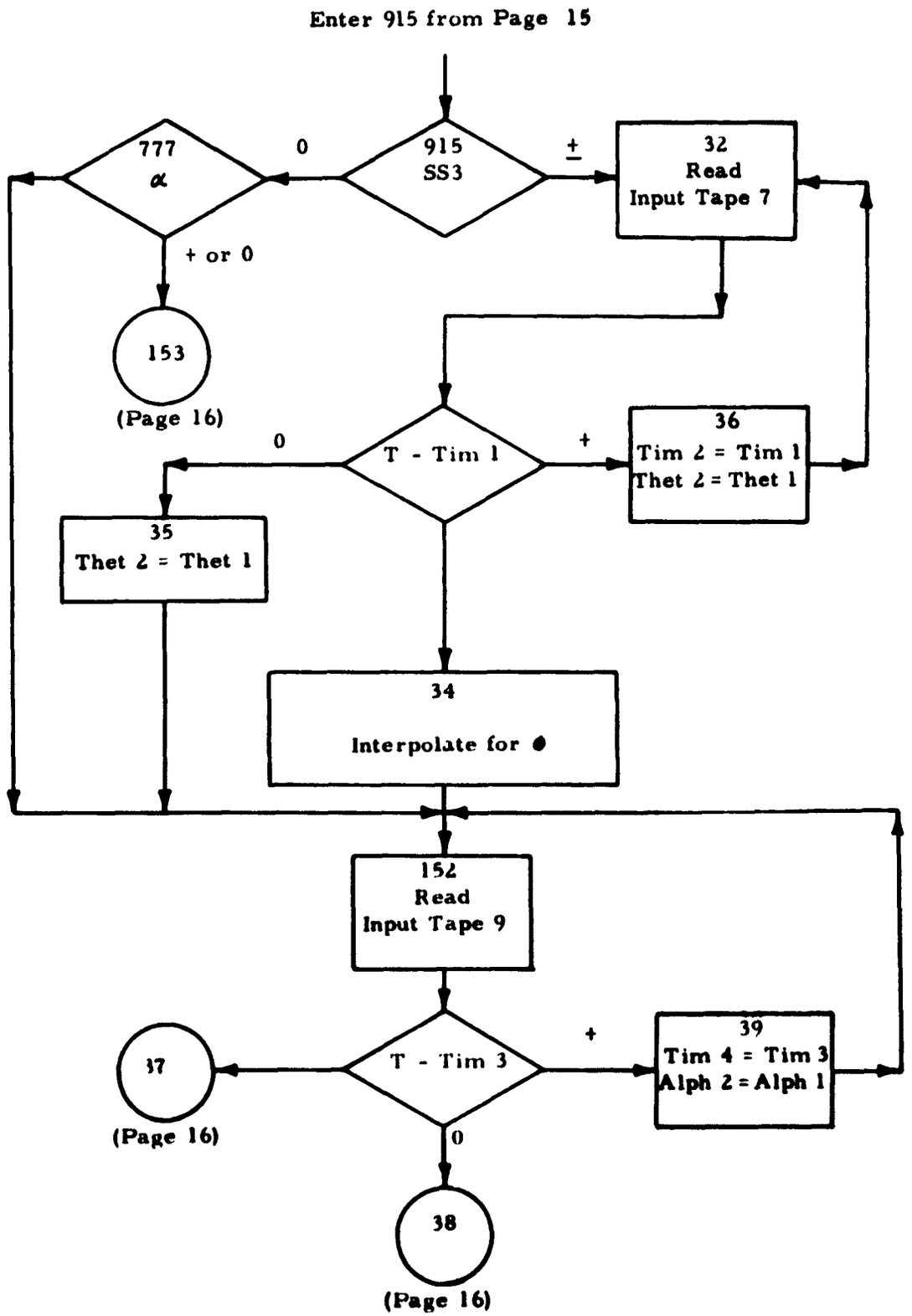
Enter 915 from Page 15
915
SS3
0
±
32
Read
Input Tape 7
777
α
+ or 0
153
(Page 16)
T - Tim 1
0
+
36
Tim 2 = Tim 1
Thet 2 = Thet 1
35
Thet 2 = Thet 1
34
Interpolate for θ
152
Read
Input Tape 9
T - Tim 3
+
39
Tim 4 = Tim 3
Alph 2 = Alph 1
37
(Page 16)
0
38
(Page 16)

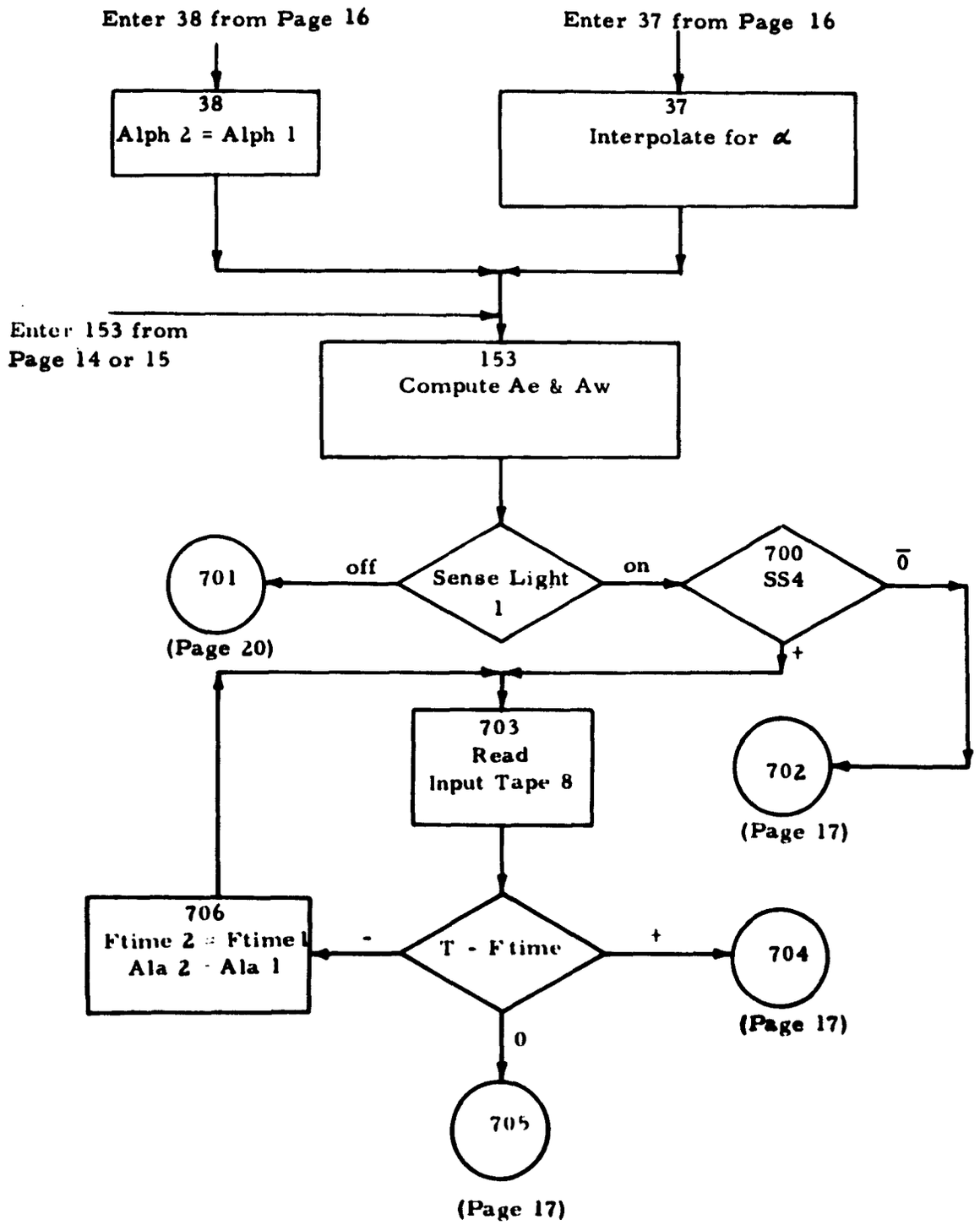
Enter 38 from Page 16
Enter 37 from Page 16
38
Alph 2 = Alph 1
37
Interpolate for α
Enter 153 from
Page 14 or 15
153
Compute Ae & Aw
701
(Page 20)
off
Sense Light
1
on
700
SS4
0̄
+
703
Read
Input Tape 8
702
(Page 17)
706
Ftime 2 = Ftime 1
Ala 2 = Ala 1
-
T - Ftime
+
704
(Page 17)
0
705
(Page 17)

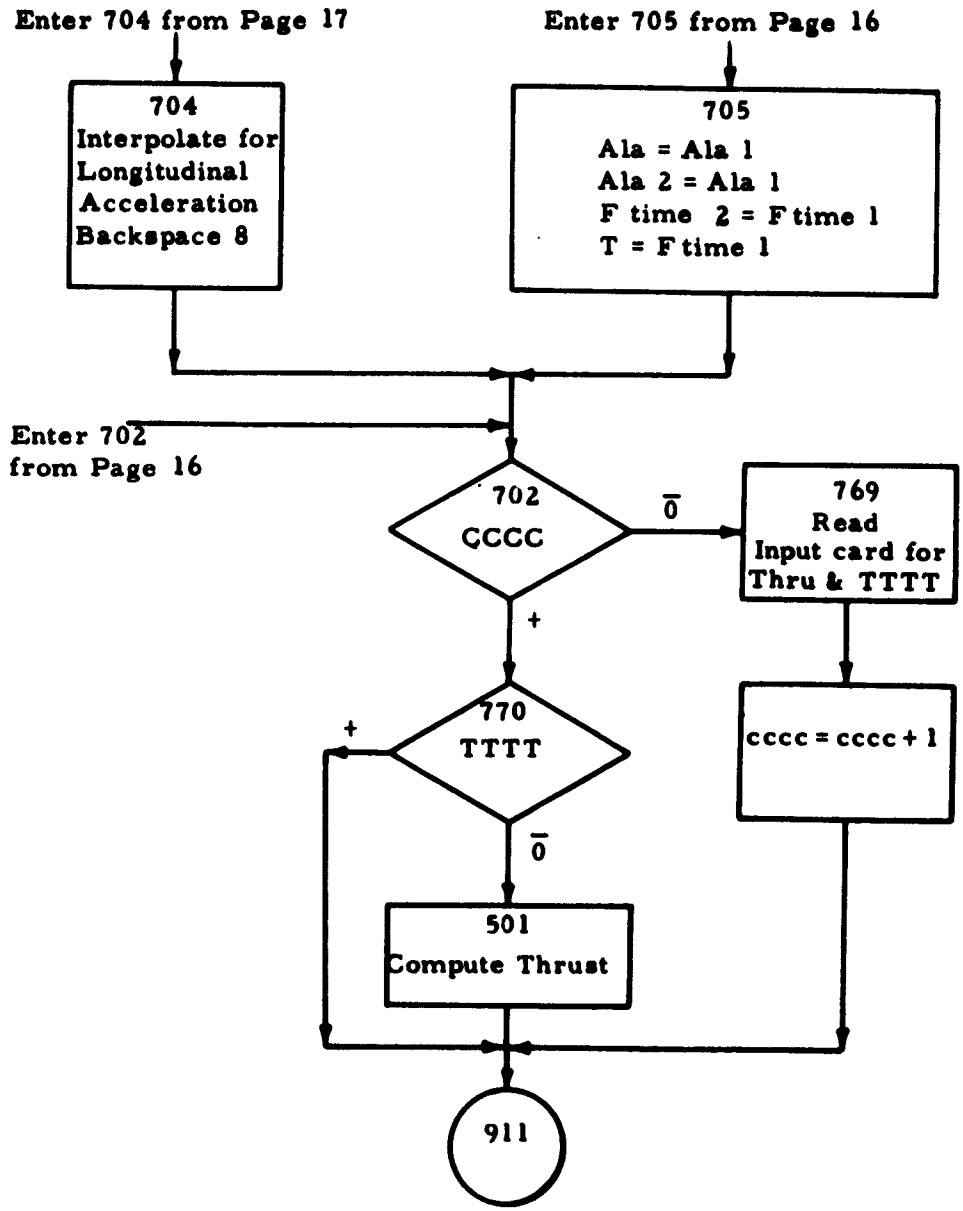
Enter 704 from Page 17
Enter 705 from Page 16
704
Interpolate for Longitudinal Acceleration Backspace 8
705
Ala = Ala 1
Ala 2 = Ala 1
F time 2 = F time 1
T = F time 1
Enter 702 from Page 16
702
CCCC
0̄
769
Read Input card for Thru & TTTT
+
770
TTTT
+
cccc = cccc + 1
0̄
501
Compute Thrust
911

(Page 18)

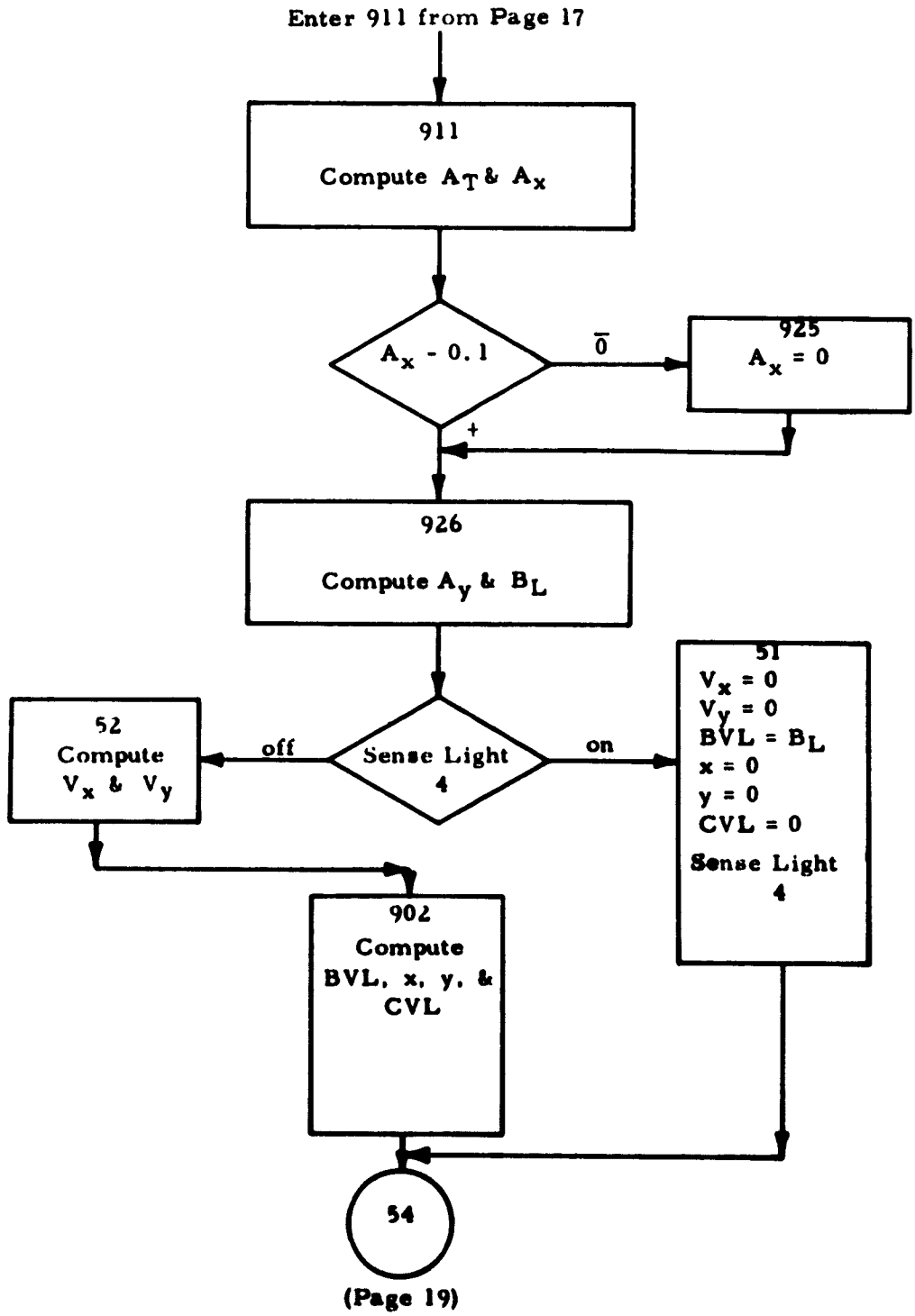
Enter 911 from Page 17
911
Compute A_T & A_x
A_x - 0.1
$\bar{0}$
925
$A_x = 0$
+
926
Compute A_y & B_L
Sense Light
4
off
on
52
Compute
V_x & V_y
51
$V_x = 0$
$V_y = 0$
$BVL = B_L$
x = 0
y = 0
CVL = 0
Sense Light
4
902
Compute
BVL, x, y, &
CVL
54
(Page 19)

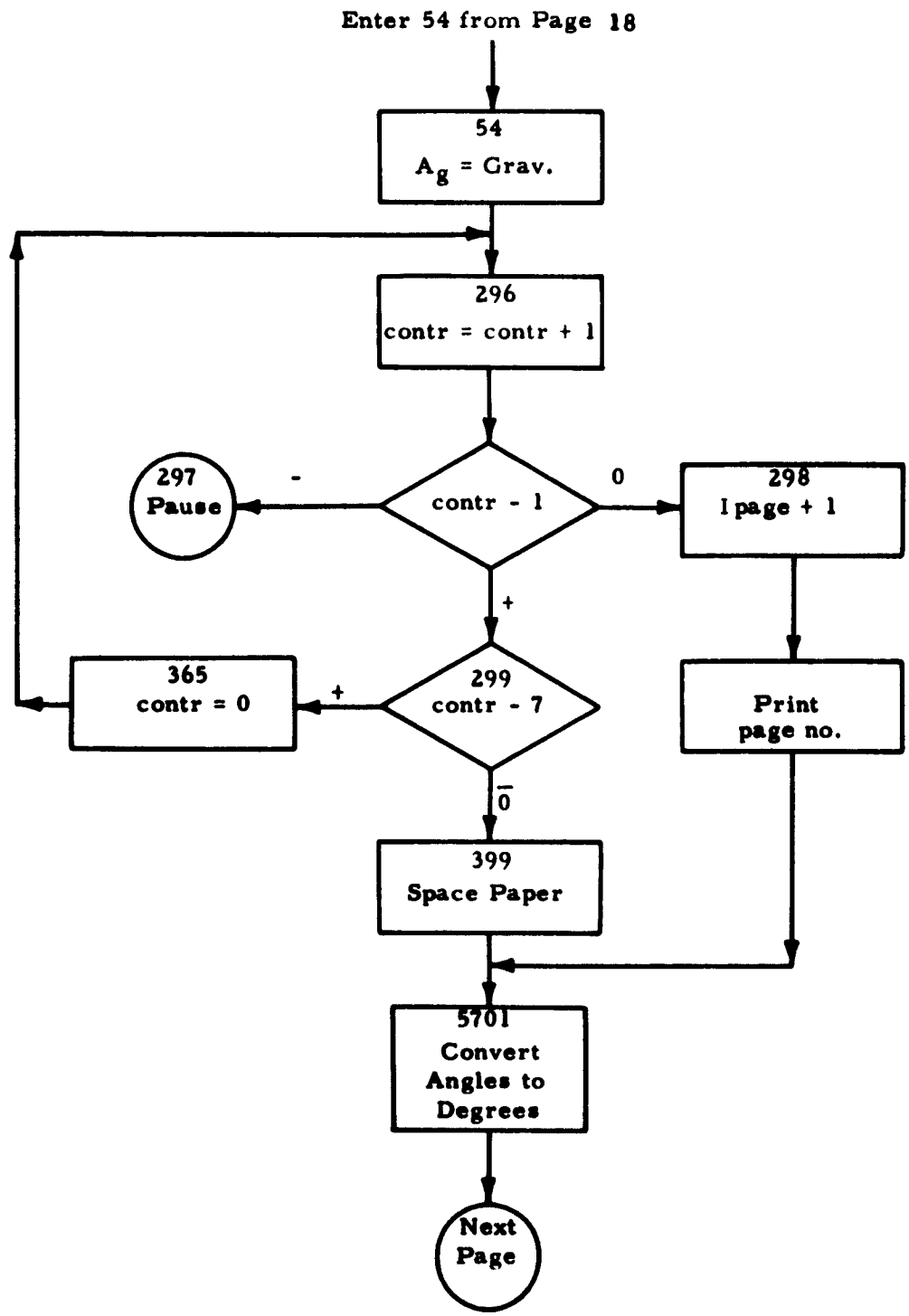
Enter 54 from Page 18
54
A_g = Grav.
296
contr = contr + 1
contr - 1
-
297
Pause
0
298
1 page + 1
+
299
contr - 7
+
365
contr = 0
Print
page no.
$\overline{0}$
399
Space Paper
5701
Convert
Angles to
Degrees
Next
Page

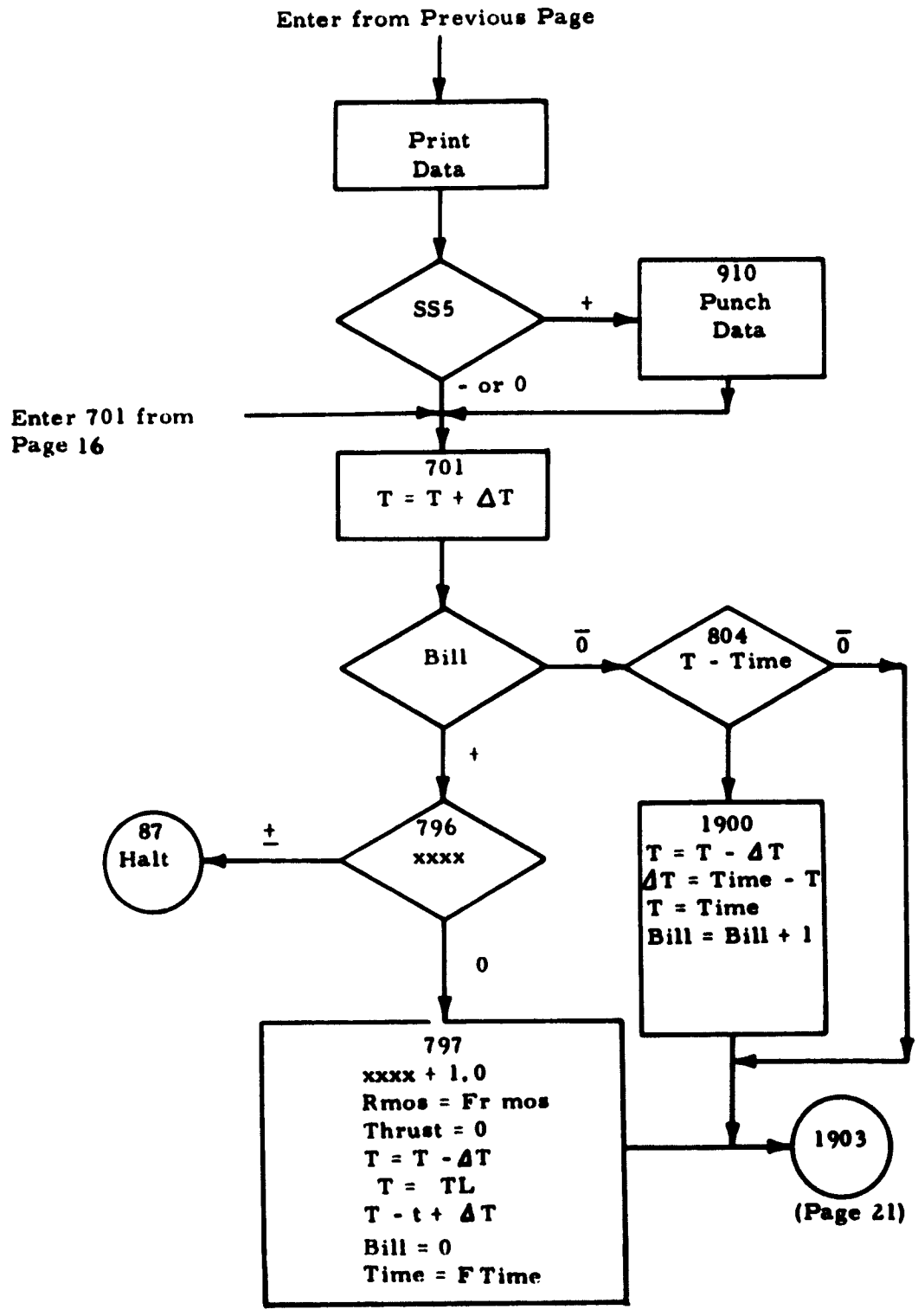
Enter from Previous Page
Print Data
SS5
+
910 Punch Data
- or 0
Enter 701 from Page 16
701
T = T + ΔT
Bill
0̄
804
T - Time
0̄
+
87 Halt
±
796
xxxx
1900
T = T - ΔT
ΔT = Time - T
T = Time
Bill = Bill + 1
0
797
xxxx + 1.0
Rmos = Fr mos
Thrust = 0
T = T - ΔT
T = TL
T - t + ΔT
Bill = 0
Time = F Time
1903
(Page 21)

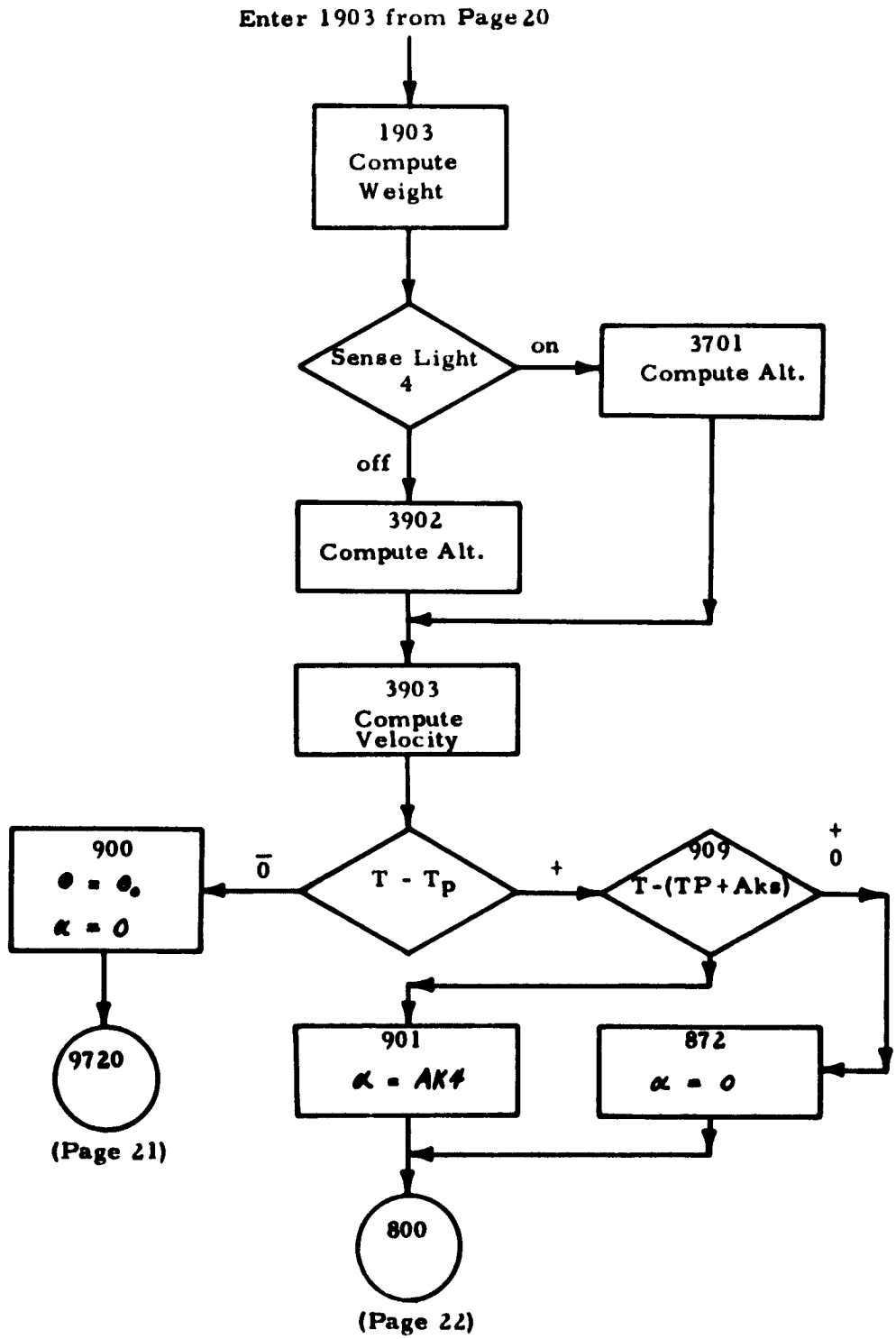
Enter 1903 from Page 20
1903
Compute
Weight
Sense Light
4
on
3701
Compute Alt.
off
3902
Compute Alt.
3903
Compute
Velocity
900
$\theta = \theta_0$
$\alpha = 0$
$\bar{0}$
T - Tp
+
909
T-(TP+Aks)
+
0
9720
(Page 21)
901
α = AK4
872
$\alpha = 0$
800
(Page 22)

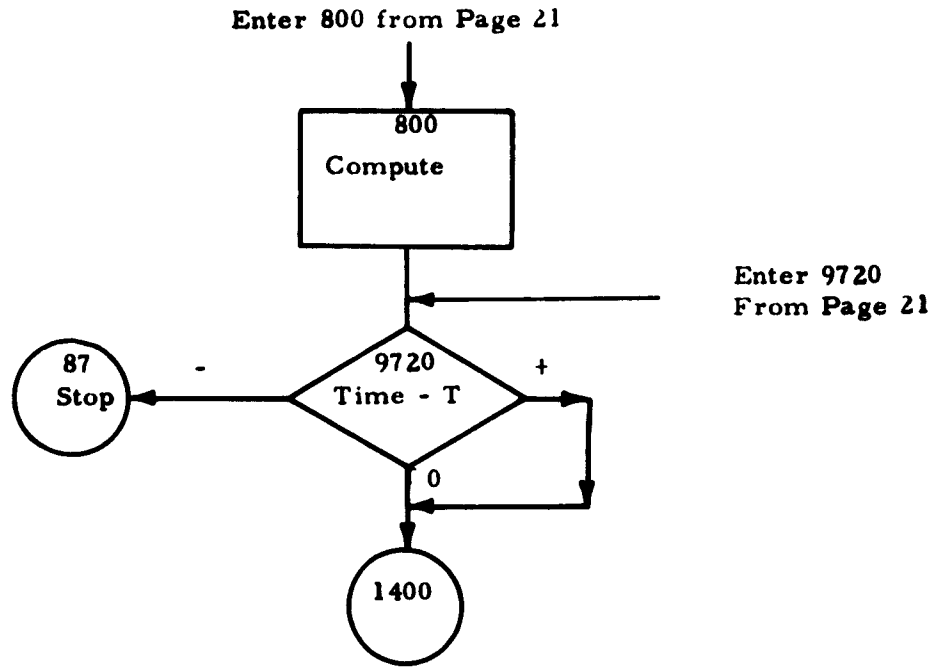
Enter 800 from Page 21
800
Compute
Enter 9720
From Page 21
87
Stop
-
9720
Time - T
+
0
1400

(Page 9)

FORTRAN STATEMENTS

SP11A Version
Card-Tape

```
      FORTRAN   RUN
                BOP                          16
C      LAUNCH PHASE TRAJECTORY BY W B WARREN FOR RESEARCH STAFF
C                              24 AUGUST 1962
C
C
C                              PROGRAM NO. 649
C      RMAS # PROPELLANT MASS RATE OF FLOW - LBS/SEC
C      BIWT # TOTAL INITIAL WEIGHT  -POUNDS
C      FWT # MISSILE WEIGHT AT BURNOUT -POUNDS
C      VL   # INITIAL LONGITUDINAL VELOCITY
C      AL   # MISSILE LENGTH -FEET
C      A    # VEHICLE REFERENCE AREA  -FEET
C      TIME # TIME OF BURNOUT - SECONDS
C      D # DIAMETER OF MISSILE - FEET
C     OTHETA # ANGLE OF THE VELOCITY VECTOR WITH RESPECT TO THE HORIZONTA
C     1L -RADIANS
C      AK1 # THETA AT BURNOUT - RADIANS
C      ALPHA # ANGLE OF ATTACK
C      THRUST # POUNDS FORCE
C      ALTC  # LAUNCH ALTITUDE
C      DRAGC # INITIAL DRAG
C      ALAM  # LIMIT ON DRAG COEFFICIENT CURVE
C      ALAM1 # LIMIT ON DRAG COEFFICIENT CURVE
C      G # GRAVITATIONAL FORCE FOR LAUNCH ALTITUDE
C     OUNITS OF TABLES USED -SPEED OF SOUND-FT/SEC, DENSITY-LB/FT**3, GRA
C     1VITY -FT/SEC**2, ALTITUDE -FEET
C
C
      READ 100,RMAS,BIWT,FWT,VL,AL
      READ 100,A,TIME,DELT,D,THETA
      READ 100,AK1,AK4,THRUST,ALTO,DRAGO
      READ 100,ALAM,G,ALAM1,TP,FTIME
      READ 100,ALA,FRMAS
      READ  100,SS1,SS2,SS3,SS4,SS5
      PRINT 1000,RMAS,BIWT,FWT,VL,AL
      PRINT 1001,A,TIME,DELT,D,THETA
      PRINT 1002,AK1,AK4,THRUST,ALTO,DRAGO
 1000 FORMAT %1H1,6HRMAS  ,E15.8,2X,6HIWT   ,E15.8,2X,6HFWT   ,E15.8,2X,
     16HVL    ,E15.8,2X,6H  L   ,E15.8¤
 1001 FORMAT %1H ,6H  A   ,E15.8,2X,6HTIME  ,E15.8,2X,6HDELT  ,E15.8,2X,
     16HDIAM  ,E15.8,2X,6HTHETA ,E15.8¤
 1002 FORMAT %1H ,6H  K1  ,E15.8,2X,6H  K4  ,E15.8,2X,6HTHRUST,E15.8,2X,
     16HALTO  ,E15.8,2X,6HDRAGO  ,E15.8¤
      SENSE LIGHT 2
      XXXX # 0.
      THETO #THETA
      AK3 # 30.
      ALPHA # 0.
  100 FORMAT %5E15.8¤
      T # 0.
      CCCC # 0.
      BILL # 0.
```

```
      IPAGE # 0
      CONTR # 0.
      SENSE LIGHT 4
      AMASS # BIWT
      ALT # ALTO
 1400 READ INPUT TAPE 1,2000,ALT1,DEN1,GRAV1,THRU1,SOS1
 2000 FORMAT %5E15.8¤
      IF%ALT1-500000.¤481,481,482
  482 SCS1#0.
  481 DEN1#DEN1*.0310807453
      IF %ALT -ALT1¤1,2,3
    3 ALT2#ALT1
      DEN2#DEN1
      GRAV2#GRAV1
      THRU2 # THRU1
      SCS2  # SOS1
      GO TO 1400
    2 ALT #ALT1
      GRAV #GRAV1
      DEN  #DEN1
      ALT2 # ALT1
      GRAV2 # GRAV1
      DEN2 # DEN1
      SCS2 # SCS1
      SCS  #SCS1
   40 IF %SS1¤7,7,6
    1 ALRAT # %ALT-ALT2¤/%ALT1-ALT2¤
      DEN # DEN2 - %ALRAT*%DEN2-DEN1¤¤
      GRAV# GRAV2-%ALRAT*%GRAV2-GRAV1¤¤
      IF %SCS1 - SOS2¤ 1301,1302,1303
 1302 SCS # SCS1
      GO TO 1304
 1301 SCS # SCS2 - %ALRAT * %SOS2 - SOS1¤¤
      GO TO 1304
 1303 SCS # SCS2 & %ALRAT * %SOS1 - SOS2¤¤
 1304 BACKSPACE 1
      GO TO 40
    7 IF %THRUST¤ 8,9,10
    9 SENSE LIGHT 1
      GO TO 23
    8 GO TO 10
   10 THRU#THRUST
      GO TO 23
    6 READ INPUT TAPE 6,2100,T1,THRU1
 2100 FORMAT %2E15.8¤
      IF %T-T1¤7200,7201,7202
 7201 THRU # THRU1
      THRU2 # THRU1
      GO TO 23
 7200 THRU2#THRU1
      T2 # T1
      GO TO 6
 7202 TRAT #%T-T2¤/%T1-T2¤
```

```
      THRU # THRU2 & %%THRU2-THRU1¤*TRAT¤
      BACKSPACE 6
      GC TC 23
   23 AM#VL/SCS
      IF%AM¤87,76,11
   76 DRAG#0.
      GC TC 151
   11 REAC INPUT TAPE 2,2200,AM1,DRAG1
      IF %AM - ALAM.15,15,14
   14 IF %AM-ALAM1¤16,16,15
   15 IF %AM-AM1¤17,18,19
   19 DRAG2 # DRAG1
      AM2 # AM1
      GC TC 11
   18 DRAG # DRAG1
      AMACH # AM1
      BACKSPACE 2
      GC TC 151
   17 AMRAT # %AM-AM2¤/%AM1-AM2¤
      DRAG # DRAG2-AMRAT*%DRAG2-DRAG1¤
      AMACH # AM
      BACKSPACE 2
      GC TC 151
   16 IF %AM-AM1¤20,21,22
   20 AMRAT # %AM-AM2¤/%AM1-AM2¤
      DRAC # DRAG2&%AMRAT*%DRAG1-DRAG2¤¤
      AMACH # AM
      BACKSPACE 2
      GC TC 151
   21 DRAC # DRAG1
      AMACH # AM1
      GC TC 151
   22 DRAC2 # DRAG1
      AM2 # AM1
      GC TC 11
  151 IF %SS2¤27,27,26
   27 DPW #0.
      GC TC 2222
   26 REAC INPUT TAPE 5,2200,HEIG1,VW1
      IF %ALT-HEIG1¤28,29,30
   30 HEIG2 # HEIG1
      VW2 # VW1
      GC TC 26
   28 HRAT # %HEIG1-ALT¤/%HEIG1-HEIG2¤
      VW # VW1-%HRAT¤*%VW1-VW2¤
   31 DPW %%%DEN¤*VW**2¤¤/2.
      BACKSPACE 5
      GC TC 2222
   29 VW # VW1
      GC TC 31
 2222 AD#%%%1./2.¤*DEN*%VL**2¤*DRAG*A¤/AMASS
      IF %T - TP¤153,153,915
  915 IF %SS3¤777,777,32
```

```
 777 IF %ALPHA¤152,153,153
  32 READ INPUT TAPE 7,2300,TIM1,THET1
2300 FORMAT %2E15.8¤
     IF%T-TIM1¤34,35,36
  35 THET2 #THET1
     GO TO 152
  36 TIM2 #TIM1
     THET2#THET1
     GO TO 32
  34 TRAT#%T-TIM2¤/%TIM1-TIM2¤
     THET2 #THET2-%TRAT*%THET2-THET1¤¤
 152 READ INPUT TAPE 9,2300,TIM3,ALPH1
     IF %T-TIM3¤37,38,39
  38 ALPHA #ALPH1
     GO TO 153
  39 TIM4#TIM3
     ALPH2 #ALPH1
     GO TO 152
  37 T3RAT #%T-TIM4¤/%TIM3-TIM4¤
     ALPHA # ALPH2 -%T3RAT*%ALPH2-ALPH1¤¤
 153 AE # AL*C*SINF%THETA¤
     AW#%DPW*AE¤/AMASS
     IF %SENSE LIGHT 1¤ 700,701
 700 IF %SS4¤ 702,702,703
 703 READ INPUT TAPE 8,2200,FTIME1,ALA1
2200 FORMAT %2E15.8¤
     IF %T-FTIME¤704,705,706
 706 FTIME2 #FTIME1
     ALA2 #ALA1
     GO TO 703
 705 ALA #ALA1
     ALA2#ALA1
     FTIME2#FTIME1
     T #FTIME1
     GO TO 702
 704 TIMER # %T-FTIME2¤/%FTIME1 - FTIME2¤
     ALA %ALA2 -%TIMER*%FTIME2 -FTIME1¤¤
     BACKSPACE 8
 702 IF %CCCC¤769,769,770
 769 READ 100,THRU,TTTT
     CCCC # CCCC & 1.
     GO TO 911
 770 IF %TTTT¤501,501,911
 501 THRU# %AMASS/COSF%ALPHA¤¤*%ALA&AD&AG*SINF%THETA¤-AW*COSF%THETA¤¤
 911 AT#THRU/AMASS
     AX # AT*COSF%THETA - ALPHA¤ - %AD*COSF%THETA¤¤& AW
     IF %AX - .1¤925,925,926
 925 AX # 0.
 926 AY # AT*SINF%THETA - ALPHA¤ - %AD*SINF %THETA¤¤-GRAV
     BL # AX* COSF%THETA¤ & AY* SINF%THETA¤
     IF %SENSE LIGHT 4¤51,52
  51 VX #0.
     VY # 0.
```

```
      BVL# BL
      X # 0.
      Y # 0.
      CVL # 0.
      SENSE LIGHT 4
      GC TC 54
 52   VX #VX & %AX * DELT ¤
      VY # VY & %AY * DELT¤
 902  BVL # SCRTF%VX**2 & VY**2¤
      X # X & VX*CELT
      Y # Y & VY * CELT
      CVL # SCRTF%X**2 & Y**2¤
  54  AG # GRAV
 296  CCNTR #CCNTR & 1.
      IF %CCNTR-1.¤297,298,299
 297  PAUSE
 299  IF %CCNTR -7.¤399,399,365
 365  CCNTR # 0.
      GC TC 296
 298  IPACE # IPAGE & 1
      PRINT 5000,IPAGE
5000  FCRMAT %1H1,110X,5HPAGE ,I3¤
 399  PRINT 4999
4999  FCRMAT %1H ,//¤
5701  AAAA1 # ALPHA/.01745
      AAAA2 # THETA/.01745
      PRINT 5001,T,X,Y,CVL,AAAA1
50010FCRMAT %1H ,6HTIME  ,E15.8,2X,3H X ,E15.8,2X,3H Y ,E15.8,2X,3H L ,
     1E15.8,2X,6HALPHA ,E15.8¤
      ANM # X/6080.
      ALT # Y & ALTO
      PRINT 5002,THRU,VX,VY,BVL,AAAA2
50020FCRMAT %1H ,6HTHRUST,E15.8,2X,3HVX ,E15.8,2X,3HVY ,E15.8,2X,3HVL ,
     1E15.8,2X,6HTHETA ,E15.8¤
      PRINT 5003,AMASS,AX,AY,BL,AC
50030FCRMAT %1H ,6HMASS  ,E15.8,2X,3HAX ,E15.8,2X,3HAY ,E15.8,2X,3HAL ,
     1E15.8,2X,6HAG   ,E15.8¤
      PRINT 5004,AW,AT,AD,DEN,AM
50040FCRMAT %1H ,6HAW   ,E15.8,2X,3HAT ,E15.8,2X,3HAD ,E15.8,2X,3HDEN,
     1E15.8,2X,6HAM   ,E15.8¤
      PRINT 5005,SOS,ANM,AE,D,ALT
50050FCRMAT %1H ,6HSOS   ,E15.8,2X,3HNM ,E15.8,2X,3HAE ,E15.8,2X,3H D ,
     1E15.8,2X,6HALT   ,E15.8¤
      PRINT 5006,CRAG,AK1,VW,DPW,GRAV
50060FCRMAT %1H ,6HDRAG  ,E15.8,2X,3HK1 ,E15.8,2X,3HVW ,E15.8,2X,3HDPW,
     1E15.8,2X,6HGRAV  ,E15.8¤
      IF %SS5¤701,701,910
 910  PUNCH 3900,T,BVL,HL,ALT,X
3900  FCRMAT %5F15.4¤
 701  T # T & CELT
      IF %CILL¤804,804,796
 796  IF %XXXX¤87,797,798
 797  XXXX # XXXX & 1.
```

```
      RMAS # FRMAS
      THRUST # 0.
      T # T - DELT
      DELT # .1
      T # T & DELT
      BILL # 0.
      TIME # FTIME
      GO TO 1903
  804 IF %T - TIME¤1903,1903,1900
 1900 T # T - DELT
      DELT # TIME - T
      T # TIME
      BILL # BILL &1.
 1903 BIWT # BIWT -%%RMAS*DELT¤/32.174¤
      AMASS # BIWT
      IF %SENSE LIGHT 4¤3901,3902
 3901 ALT # BVL * DELT
      GO TO 3903
 3902 ALT # YE VY *DELT
 3903 VL # BVL
      IF %T - TP¤900,900,909
  900 THETA # THETO
      ALPHA # 0.
      GO TO 9720
  909 IF %T-%TP&AK3¤¤901,901,872
  872 ALPHA # 0.
      GO TO 800
  901 ALPHA # AK4
  800 THETA #ATANF%VY/VX¤
 9720 IF %TIME -T¤87,1400,1400
   87 STOP
  798 STOP
      END
```

FORTRAN STATEMENTS

SP11B Version
Card

```
      FORTRAN    RUN
                 BCP                          16
C      LAUNCH PHASE TRAJECTORY BY W B WARREN FOR RESEARCH STAFF
C                                24 AUGUST 1962
C
C
C                                PROGRAM NO. 649
C      RMAS # PROPELLANT MASS RATE OF FLOW - LBS/SEC
C      BIWT # TOTAL INITIAL WEIGHT  -POUNDS
C      FWT # MISSILE WEIGHT AT BURNOUT -POUNDS
C      VL   # INITIAL LONGITUDINAL VELOCITY
C      AL   # MISSILE LENGTH -FEET
C      A    # VEHICLE REFERENCE AREA  -FEET
C      TIME # TIME OF BURNOUT - SECONDS
C      D # DIAMETER OF MISSILE - FEET
C     OTHETA # ANGLE OF THE VELOCITY VECTOR WITH RESPECT TO THE HORIZONTA
C     1L -RADIANS
C      AK1 # THETA AT BURNOUT - RADIANS
C      ALPHA # ANGLE OF ATTACK
C      THRUST # POUNDS FORCE
C      ALTC  # LAUNCH ALTITUDE
C      DRAGC # INITIAL DRAG
C      ALAM  # LIMIT ON DRAG COEFFICIENT CURVE
C      ALAM1 # LIMIT ON DRAG COEFFICIENT CURVE
C      G # GRAVITATIONAL FORCE FOR LAUNCH ALTITUDE
C     OUNITS OF TABLES USED -SPEED OF SOUND-FT/SEC, DENSITY-LB/FT**3, GRA
C     1VITY -FT/SEC**2, ALTITUDE -FEET
C
C
 8888 FORMAT &L15.8¤
      REAL 8888,SCLASS
      READ 100,RMAS,BIWT,FWT,VL,AL
      READ 100,A,TIME,DELT,D,THETA
      READ 100,AK1,AK4,THRUST,ALTO,DRAGO
      READ 100,ALAM,G,ALAM1,TP,FTIME
      READ 100,ALA,FRMAS
      READ  100,SS1,SS2,SS3,SS4,SS5
      CALL CLASS %SCLASS¤
      PRINT 1000,RMAS,BIWT,FWT,VL,AL
      PRINT 1001,A,TIME,DELT,D,THETA
      PRINT 1002,AK1,AK4,THRUST,ALTO,DRAGO
      CALL CLASS %SCLASS¤
 1000 FORMAT %1H ,6HRMAS  ,E15.8,2X,6HIWT   ,E15.8,2X,6HFWT   ,E15.8,2X,
     16HVL    ,E15.8,2X,6H  L   ,E15.8¤
 1001 FORMAT %1H ,6H  A   ,E15.8,2X,6HTIME  ,E15.8,2X,6HDELT  ,E15.8,2X,
     16HDIAM  ,E15.8,2X,6HTHETA ,E15.8¤
 1002 FORMAT %1H ,6H  K1  ,E15.8,2X,6H  K4  ,E15.8,2X,6HTHRUST,E15.8,2X,
     16HALTC  ,E15.8,2X,6HDRAGO  ,E15.8,////////////////////////////////
     2//////////////////////¤
      SENSE LIGHT 2
      XXXX # 0.
      THETO #THETA
      AK3 # 30.
```

```
      ALPHA # 0.
  100 FORMAT %5E15.8¤
      T # 0.
      CCCC # 0.
      BILL # 0.
      IPAGE # 0
      CONTR # 0.
      SENSE LIGHT 4
      AMASS # BIWT
      ALT # ALTO
 1400 CALL TAP %GRAV,ALT,ATEMK,APNMM,DEN,SOS,ATEMR¤
      IF %SS1¤7,7,6
    7 IF %THRUST¤ 8,9,10
    9 SENSE LIGHT 1
      GO TO 23
    8 GO TO 10
   10 THRU#THRUST
      GO TO 23
    6 READ INPUT TAPE 6,2100,T1,THRU1
 2100 FORMAT %2E15.8¤
      IF %T-T1¤7200,7201,7202
 7201 THRU # THRU1
      THRU2 # THRU1
      GO TO 23
 7200 THRU2#THRU1
      T2 # T1
      GO TO 6
 7202 TRAT #%T-T2¤/%T1-T2¤
      THRU # THRU2 & %%THRU2-THRU1¤*TRAT¤
      BACKSPACE 6
      GO TO 23
   23 AM#VL/SOS
      IF%AM¤87,76,11
   76 DRAG#0.
      GO TO 151
   11 CALL DRAGCO %DRAG,AMACH,AM¤
  151 IF %SS2¤27,27,26
   27 DPW #0.
      GO TO 2222
   26 CALL WIND %ALT,VW¤
   31 DPW#%DEN*VW**2¤/2.
 2222 AD#%%1./2.¤*DEN*%VL**2¤*DRAG*A¤/AMASS
      IF %T - TP¤153,153,915
  915 IF %SS3¤777,777,32
  777 IF %ALPHA¤152,153,153
   32 READ INPUT TAPE 7,2300,TIM1,THET1
 2300 FORMAT %2E15.8¤
      IF%T-TIM1¤34,35,36
   35 THET2 #THET1
      GO TO 152
   36 TIM2 #TIM1
      THET2#THET1
      GO TO 32
```

```
   34 TRAT#%T-TIM2¤/%TIM1-TIM2¤
      THET2 #THET2-%TRAT*%THET2-THET1¤¤
  152 READ INPUT TAPE 9,2300,TIM3,ALPH1
      IF %T-TIM3¤37,38,39
   38 ALPHA #ALPH1
      GO TO 153
   39 TIM4#TIM3
      ALPH2 #ALPH1
      GO TO 152
   37 T3RAT #%T-TIM4¤/%TIM3-TIM4¤
      ALPHA # ALPH2 -%T3RAT*%ALPH2-ALPH1¤¤
  153 AE # AL*D*SINF%THETA¤
      AW#%DPW*AE¤/AMASS
      IF %SENSE LIGHT 1¤ 700,701
  700 IF %SS4¤ 702,702,703
  703 READ INPUT TAPE 8,2200,FTIME1,ALA1
 2200 FORMAT %2E15.8¤
      IF %T-FTIME¤704,705,706
  706 FTIME2 #FTIME1
      ALA2 #ALA1
      GO TO 703
  705 ALA #ALA1
      ALA2#ALA1
      FTIME2#FTIME1
      T #FTIME1
      GO TO 702
  704 TIMER # %T-FTIME2¤/%FTIME1 - FTIME2¤
      ALA #ALA2 -%TIMER*%FTIME2 -FTIME1¤¤
      BACKSPACE 8
  702 IF %CCCC¤769,769,770
  769 READ 100,THRU,TTTT
      CCCC # CCCC & 1.
      GO TO 911
  770 IF %TTTT¤501,501,911
  501 THRU# %AMASS/COSF%ALPHA¤¤*%ALA&AD&AG*SINF%THETA¤-AW*COSF%THETA¤¤
  911 AT#THRU/AMASS
      AX # AT*COSF%THETA - ALPHA¤ - %AD*COSF%THETA¤¤& AW
      IF %AX - .1¤925,925,926
  925 AX # 0.
  926 AY # AT*SINF%THETA - ALPHA¤ - %AD*SINF %THETA¤¤-GRAV
      BL # AX* COSF%THETA¤ & AY* SINF%THETA¤
      IF %SENSE LIGHT 4¤51,52
   51 VX #0.
      VY # 0.
      BVL# BL
      X # 0.
      Y # 0.
      CVL # 0.
      SENSE LIGHT 4
      GO TO 54
   52 VX #VX & %AX * DELT ¤
      VY # VY & %AY * DELT¤
  902 BVL # SQRTF%VX**2 & VY**2¤
```

```
      X # X & VX*DELT
      Y # Y & VY * DELT
      CVL # SQRTF%X**2 & Y**2¤
   54 AG # GRAV
  296 CONTR #CONTR & 1.
      IF %CONTR-1.¤297,298,299
  297 PAUSE
  299 IF %CONTR -7.¤399,399,365
  365 CONTR # 0.
      PRINT 9462
 9462 FORMAT %1HK¤
      CALL CLASS %SCLASS¤
      GO TO 296
  298 IPAGE # IPAGE & 1
      PRINT 5000,IPAGE
 5000 FORMAT %1H1,110X,5HPAGE ,I3¤
      CALL CLASS %SCLASS¤
  399 PRINT 4999
 4999 FORMAT %1H ,//¤
 5701 AAAA1 # ALPHA/.01745
      AAAA2 # THETA/.01745
      PRINT 5001,T,X,Y,CVL,AAAA1
 50010FORMAT %1H ,6HTIME  ,E15.8,2X,3H X ,E15.8,2X,3H Y ,E15.8,2X,3H L ,
     1E15.8,2X,6HALPHA ,E15.8¤
      ANM # X/6080.
      ALT # Y & ALTO
      PRINT 5002,THRU,VX,VY,BVL,AAAA2
 50020FORMAT %1H ,6HTHRUST,E15.8,2X,3HVX ,E15.8,2X,3HVY ,E15.8,2X,3HVL ,
     1E15.8,2X,6HTHETA ,E15.8¤
      PRINT 5003,AMASS,AX,AY,BL,AG
 50030FORMAT %1H ,6HMASS  ,E15.8,2X,3HAX ,E15.8,2X,3HAY ,E15.8,2X,3HAL ,
     1E15.8,2X,6HAG   ,E15.8¤
      PRINT 5004,AW,AT,AD,DEN,AM
 50040FORMAT %1H ,6HAW   ,E15.8,2X,3HAT ,E15.8,2X,3HAD ,E15.8,2X,3HDEN,
     1E15.8,2X,6HAM   ,E15.8¤
      PRINT 5005,SOS,ANM,AE,D,ALT
 50050FORMAT %1H ,6HSOS   ,E15.8,2X,3HNM ,E15.8,2X,3HAE ,E15.8,2X,3H D ,
     1E15.8,2X,6HALT   ,E15.8¤
      PRINT 5006,DRAG,AK1,VW,DPW,GRAV
 50060FORMAT %1H ,6HDRAG  ,E15.8,2X,3HK1 ,E15.8,2X,3HVW ,E15.8,2X,3HDPW,
     1E15.8,2X,6HGRAV  ,E15.8¤
      IF %SS5¤701,701,910
  910 PUNCH 3900,T,BVL,BL,ALT,X
 3900 FORMAT %5F15.4¤
  701 T # T & DELT
      IF %BILL¤804,804,796
  796 IF %XXXX¤87,797,798
  797 XXXX # XXXX & 1.
      RMAS # FRMAS
      THRUST # 0.
      T # T - DELT
      DELT # .1
      T # T & DELT
```

```
      BILL # 0.
      TIME # FTIME
      GC TO 1903
  804 IF %T - TIME¤1903,1903,1900
 1900 T # T - DELT
      DELT # TIME - T
      T # TIME
      BILL # BILL &1.
 1903 BIWT # BIWT -%%RMAS*DELT¤/32.174¤
      AMASS # BIWT
      IF %SENSE LIGHT 4¤3901,3902
 3901 ALT # BVL * DELT
      GC TC 3903
 3902 ALT # YE VY *DELT
 3903 VL # BVL
      IF %T - TP¤900,900,909
  900 THETA # THETO
      ALPHA # 0.
      GO TC 9720
  909 IF %T-%TPEAK3¤¤901,901,872
  872 ALPHA # 0.
      GC TC 800
  901 ALPHA # AK4
  800 THETA #ATANF%VY/VX¤
 9720 IF %TIME -T¤87,1400,1400
   87 STOP
  798 STOP
      END

                BOP  CLASS                16
C     PROGRAMMED BY W B WARREN
C     CLASSIFICATION OF WORKING PAPERS
      SUBROUTINE CLASS %SCLASS¤
      IF %SCLASS¤4000,6000,6001
 6001 IF %SCLASS - 1.¤4000,6002,6003
 6003 IF %SCLASS - 2.¤4000,6004,4000
 6000 PRINT 6010
 6010 FORMAT %1H ,35X,12HUNCLASSIFIED¤
      PRINT 6011
 6011 FORMAT %1H ,34X,14HWORKING PAPERS¤
      GC TC 6013
 6002 PRINT 6012
 6012 FORMAT %1H ,32X,12HCONFIDENTIAL¤
      PRINT 6011
      GC TC 6013
 6004 PRINT 6014
 6014 FORMAT %1H ,35X,6HSECRET¤
      PRINT 6011
      GC TC 6013
 4000 STOP
 6013 RETURN
      END
```

```
                    BOP  TAP                    16
C       PROGRAMMED BY W B WARREN
C       TRAJECTORY ATMOSPHERIC PROPERTIES
        SUBROUTINE TAP %GRAV,ALT,ATEMK,APNMM,DEN,SOS,ATEMR¤
        IF %SENSE LIGHT 4¤11,13
     11 DIMENSION AP%9,4¤
        SENSE LIGHT 4
        DO 12 I # 1,9
     12 READ 105,AP%I,1¤,AP%I,2¤,AP%I,3¤,AP%I,4¤
    105 FORMAT %4E15.8¤
        READ  100,UNITS
    100 FORMAT%E15.8¤
     13 IF %UNITS¤500,1000,500
   1000 ALT # ALT/3.28083989
        VL # VL/3.28083989
    500 GRAV #9.80665*%6371239.9/%6371239.9 & ALT¤¤**2
        H # ALT*6371239.9/%6371239.9 & ALT¤
        DO 202 I # 2,9
        IF %H - AP%I,1¤¤203,202,202
    202 CONTINUE
        I # 10
    203 J # I-1
        ATEMK #AP%J,2¤&%H-AP%J,1¤¤*AP%J,3¤
        IF %AP%J,3¤¤204,205,204
    204 APNMM#AP%J,4¤*%AP%J,2¤/ATEMK¤**%.03416479/AP%J,3¤¤
        GO TO 206
    205 APNMM#AP%J,4¤/EXPF%%.034164794¤*%H-AP%J,1¤¤/AP%J,2¤¤
    206 DEN  #%% .0034838394¤*APNMM/ATEMK¤
        SOS #20.046333*ATEMK**.5
        IF%UNITS¤501,502,501
    502 GRAV # GRAV*3.28083989
        H # H * 3.2808389
        ALT # ALT * 3.28083989
        DEN # DEN * %%2.205/%3.28083989**3¤¤/32.174¤
        SOS # SOS * 3.28283989
    501 ATEMR # %ATEMK-273.16¤*%9./5.¤ & 491.69
        IF %ALT - 400000.¤504,504,505
    505 DEN # 0.
        SOS # 0.
    504 RETURN
        END

                    BOP  WIND                   16
C       PROGRAMMED BY W B WARREN
C       WIND PROFILE
        SUBROUTINE WIND %ALT,VW¤
        IF %SENSE LIGHT 4¤11,13
     11 DIMENSION AW%13,3¤
        SENSE LIGHT 4
        DO 12 I#1,13
     12 READ 105,AW%I,1¤,AW%I,2¤,AW%I,3¤
    105 FORMAT %3E15.8¤
     13 DO 202 I#2,13
```

```
      IF %ALT - AW%I,1¤¤203,202,202
  202 CONTINUE
      I # 13
  203 J # I-1
      VW # AW%J,2¤ & %ALT - AW%J,1¤¤*AW%J,3¤
  501 RETURN
      END

                BOP  DRAGCO            16
C     PROGRAMMED BY W B WARREN
C     DRAG COEFFICIENT
      SUBROUTINE DRAGCO %DRAG,AMACH,AM¤
      IF %SENSE LIGHT 2¤11,13
   11 DIMENSION ADRAG%9,4¤
      DO 12 K#1,9
   12 READ 105,ADRAG%K,1¤,ADRAG%K,2¤,ADRAG%K,3¤,ADRAG%K,4¤
  105 FORMAT %4E15.8¤
   13 DO 202 K#2,9
      IF %AM-ADRAG%K,1¤¤203,202,202
  202 CONTINUE
      K # 9
  203 J # K-1
      IF %ADRAG%J,4¤¤204,205,204
  205 DRAG # AM * ADRAG%J,2¤ & ADRAG%J,3¤
      GO TO 350
  204 IF %ADRAG%J,1¤ -1.1¤300,300,301
  300 DRAG # %%%AM-ADRAG%J,2¤¤**2¤/ADRAG%J,4¤¤ & ADRAG%J,3¤
      GO TO 350
  301 DRAG # ADRAG%J,3¤ - %SQRTF%ADRAG%J,4¤*%AM-ADRAG%J,2¤¤¤¤
  350 AMACH # AM
  500 RETURN
      END
```