UNCLASSIFIED

AD 410285

DEFENSE DOCUMENTATION CENTER

FOR

SCIENTIFIC AND TECHNICAL INFORMATION

CAMERON STATION, ALEXANDRIA, VIRGINIA

UNCLASSIFIED

NOTICE: When government or other drawings, specifications or other data are used for any purpose other than in connection with a definitely related government procurement operation, the U. S. Government thereby incurs no responsibility, nor any obligation whatsoever; and the fact that the Government may have formulated, furnished, or in any way supplied the said drawings, specifications, or other data is not to be regarded by implication or otherwise as in any manner licensing the holder or any other person or corporation, or conveying any rights or permission to manufacture, use or sell any patented invention that may in any way be related thereto.

N-63-4-3

EAI

CATALOGED BY DDC
AS AD No. 410285

410285

ELECTRONIC ASSOCIATES, INC.

Research and Computation Division

DDC
RECEIVED
JUL 27 1963
B

P. O. BOX 582 — PRINCETON, N. J.

Best
Available
Copy

PROGRAMMING STUDY FOR HIGH FREQUENCY EXOSPHERIC DUCTING

Electronic Associates, Inc.
Research & Computation Division
Princeton, New Jersey

Contract No. AF19(628)1658

Technical Report No. 1
Date: November 12, 1962

Project Order No.: 4603
Task Order No.: 460302

Prepared For:

AIR FORCE CAMBRIDGE RESEARCH LABORATORIES
OFFICE OF AEROSPACE RESEARCH
UNITED STATES AIR FORCE
BEDFORD, MASSACHUSETTS

Requests for additional copies by Agencies of the Department of Defense, their contractors, and other government agencies should be directed to the:

ARMED SERVICES TECHNICAL INFORMATION AGENCY
ARLINGTON HALL STATION
ARLINGTON 12, VIRGINIA

All other persons and organizations should apply to the:

U.S. DEPARTMENT OF COMMERCE
OFFICE OF TECHNICAL SERVICES
WASHINGTON 25, D.C.

Engineers and scientists employed on this contract:

Mr. Ray Beadle
Mr. D. Basson

TABLE OF CONTENTS

Introduction ---------- 1

Computer Procedure ---------- 2

Example of Computer Results---------- 7

Instrumentation of Required Equations---------- 7

References ----------14

APPENDICES

I Generation of $\frac{dc}{dy}$

II Automatic Cycling Circuit

III Potentiometer Sheets

IV Amplifier Sheets

V Static Check Calculations

VI Circuit Diagram

INTRODUCTION

The purpose of this report is to present specific analog computer programs effective in the solution of a simplified description of the ray paths of radio waves propagating through the earth's ionosphere. The main phenomenon of interest is the description of the conditions necessary for a radio wave of a given frequency to penetrate the ionosphere and then "follow" the earth's magnetic field lines back to the earth. Such propagation in the "whistler" mode may be described by the Hamiltonian ray equations.[1] It is assumed that these ray approximations to the Maxwell Wave Equations are of sufficient accuracy in describing the phenomena.

A simplified set of ray equations may be written if it is assumed that the electron density about the earth is independent of longitude, that the effect of energy loss by collision is negligible and that the anisotropic effects of the earth's magnetic field are negligible at the frequencies of interest. ($\sim$14 mc. $f_H/f < 1$, f_H = gyro frequency). With the above assumptions, the Appleton-Hartree equations for the radio wave index of refraction reduces to:

$$\mu^2 = 1 - \frac{N(r, \theta)}{f^2(1.24 \times 10^4)}$$

where:

μ	=	radio wave index of refraction
$N(r, \theta)$	=	electron density
r	=	radial distance from the earth's center
θ	=	co-latitude
f	=	radio wave frequency in megacycles

At frequencies where $\frac{N}{f^2(1.24 \times 10^4)} \ll 1$ the bionomial expansion gives:

$$\mu \doteq 1 - \frac{N(r, \theta)}{(2.28 \times 10^4)\, f^2}$$

For the purpose of this study the following form for $N(r, \theta)$ is assumed:

$$\frac{N(r, \theta)}{2.28 \times 10^4\, f^2} = E\,F(r)\,\sin\theta \left[1 + m(r)\,c(y)\right]$$

where:

$E\,F(r)$	=	normal dependence of electron density
$m(r)$	=	radial dependence of duct
$c(y)$	=	modulation function for a duct of enhanced electron density
y	=	geomagnetic latitude parameter $= r/\sin^2\theta$
$E\,F(r)$	=	an empirical function $r \leq 6690$ km
$E\,F(r)$	=	$e^{\frac{-4.18}{a}(r-6690)}$ $r \geq 6690$ km
a	=	radius of earth in km
a	=	6,370 km

The effect of a <u>single</u> duct of enhanced electron density following the earth's magnetic field lines is determined by this assumed form for $N(r, \theta)$.

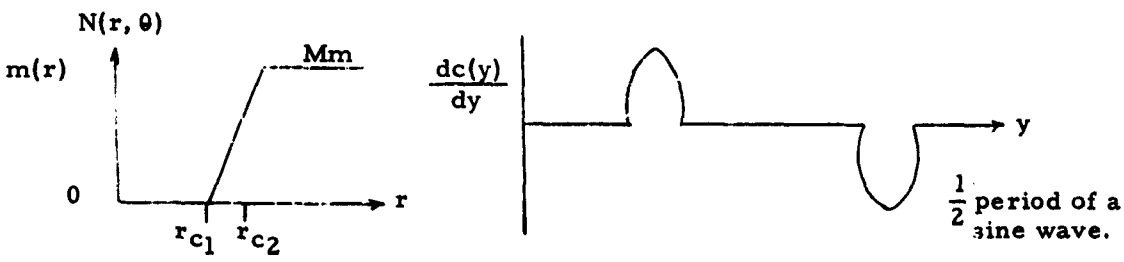

The Hamiltonian ray path equations in polar co-ordinates, when the anisotropic effect of the magnetic field and the longitudinal electron density dependence are neglected become the following [2]. $(\frac{\partial\mu}{\partial\psi})$ is an anisotropy effect and is not present in the following equations.

$$\frac{dr}{ds} = \cos\alpha$$

$$\frac{d\theta}{ds} = \frac{1}{r} \sin\alpha$$

$$\frac{d\alpha}{ds} = -\frac{1}{\mu}\frac{\partial\mu}{\partial r} \sin\alpha + \frac{1}{r}\left(\frac{1}{\mu}\frac{\partial\mu}{\partial\theta}\cos\alpha - \sin\alpha\right)$$

where:

μ	=	radio wave index of refraction
r	=	radial distance of point on ray path to the earth's center
θ	=	co-latitude of point on ray path
s	=	arc length along the ray path
α	=	angle between the wave normal and the radius vector. (Since the anisotropy of the earth's magnetic field has been neglected the wave normal direction coincides with the direction of the ray path).

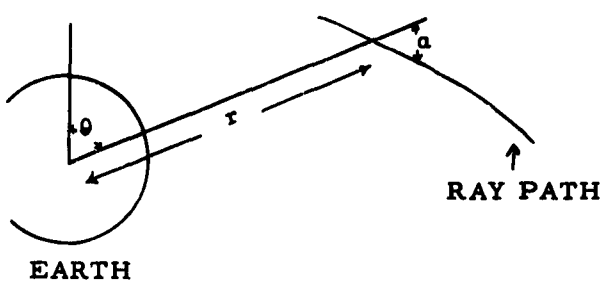

GEOMETRY OF SITUATION

Inserting $\frac{\partial\mu}{\partial r}\frac{\partial\mu}{\partial\theta}$ in terms of $N(r, \theta)$ we obtain after differentiation the following detailed form for $\frac{d\alpha}{ds}$.

$$\frac{d\alpha}{ds} = \left\{ \frac{1}{\mu} \sin\alpha \left[E \sin\theta \frac{dF}{dr} \right] - \frac{1}{\mu r} \cos\alpha \left[E\ F \cos\theta \right] - \frac{1}{r} \sin\alpha \right\}$$

$$+ \frac{1}{\mu} \sin\alpha \left[E \sin\theta \frac{dF}{dr}\ m(r)\ c(y) \right]$$

$$+ \frac{1}{\mu} \sin\alpha \left[E \sin\theta\ F \frac{dm}{dr}\ c(y) \right]$$

$$+ \frac{1}{\mu} \sin\alpha \left[\frac{E\ F\ m(r)}{\sin\theta} \frac{dc}{dy} \right]$$

$$- \frac{1}{\mu r} \cos\alpha \left[E \cos\theta\ F(r)\ m(r)\ c(y) \right]$$

$$+ \frac{1}{\mu} \cos\alpha \left[\frac{2\ E\ F\ m(r)}{\sin\theta} \cos\theta \frac{dc}{dy} \right]$$

where the first three terms are always present, but the last five terms are only present when the ray is within the duct of enhanced electron density.

It is useful to know when the radio wave path first becomes tangent to a geomagnetic line. Since the equation of a geomagnetic line is

$$r = c \sin^2\theta$$

$$\frac{dr}{d\theta} = c\ 2 \sin\theta \cos\theta = \frac{2\ r \cos\theta}{\sin\theta}$$

but $\frac{dr}{d\theta}$ on the ray path is given by

$$\frac{\frac{dr}{ds}}{\frac{d\theta}{ds}} = \frac{r \cos\alpha}{\sin\alpha}$$

Thus when the ray path is parallel to a geomagnetic field line:

$$\text{ctn}\ \alpha = 2\ \text{ctn}\theta$$

Whenever this equality holds we know that the ray path may possibly be "trapped" on a magnetic field line.

The remainder of this report deals with the various programming problems and the analog circuits required to successfully and accurately model the system equations. Specific special attention is given to implementing the five terms related to the duct so that they are not present in the circuit when the ray path lies outside the duct, and yet are accurately represented when the ray path is inside of the duct. Special computer control circuits are discussed to accomplish this task. The method of generating $F(r)$, $\frac{dF}{dr}$, $c(y)$, $\frac{dc(y)}{dy}$ is also discussed.

COMPUTER PROCEDURE

An electronic analog computer is an assembly of components whose voltage outputs can simulate the behavior of a physical system. The numerical values of the voltages in the computer are scaled to represent the magnitudes of quantities in a physical system. The computer components operate on their input voltages to produce functions required by the mathematical description of the physical system. By parallel interconnection of the components it is possible to perform many operations simultaneously and thereby construct a computer model of the system. In a general purpose computer the interconnection of the electronic components is established very easily by programming a patch panel, allowing rapid construction and, if necessary, changes in the computer model. The computer contains a complete monitoring capability so that all voltages can be measured accurately and conveniently.

SYMBOLS FOR PACE GENERAL PURPOSE ANALOG COMPUTER

NAME	SYMBOL	FUNCTION	DESCRIPTION
High Gain Amplifier	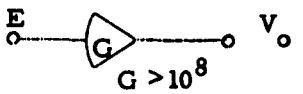	$V_o = -GE$	Operational Amplifier
Summer	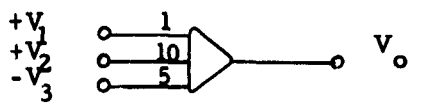	$V_o = -(V_1 + 10V_2 - 5V_3)$	Amplifier Multiple Input
Integrator	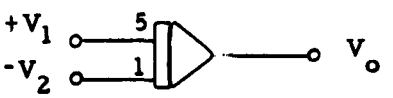	$V_o = -\ (5V_1 - V_2)dt$	Amplifier Multiple Input
Coefficient Potentiometer	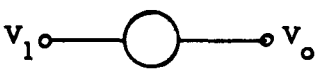	$V_o = KV_1$ $0 < K < 1$	Manually Set Potentiometer
Servo Multiplier	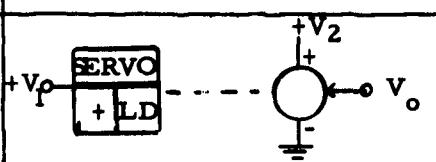	$V_o = +\ \frac{V_1 V_2}{100}$	Servo Driven Potentiometer
Division Circuit	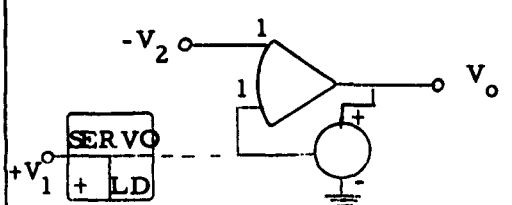	$V_o = +\ \frac{100V_2}{V_1}$	High Gain Amplifier and Servo Driven Potentiometer
Electronic Multiplier	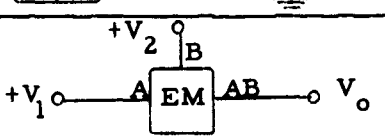	$V_o = -\ \frac{V_1 V_2}{100}$	Electronic Multiplier
Servo Function Generator	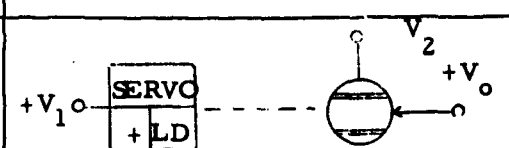	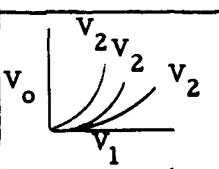	Arbitrary Functions
Diode Function Generator		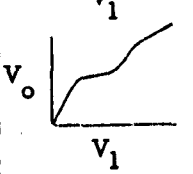	

The groups of basic components are assembled in electronic racks and wired to a control console:

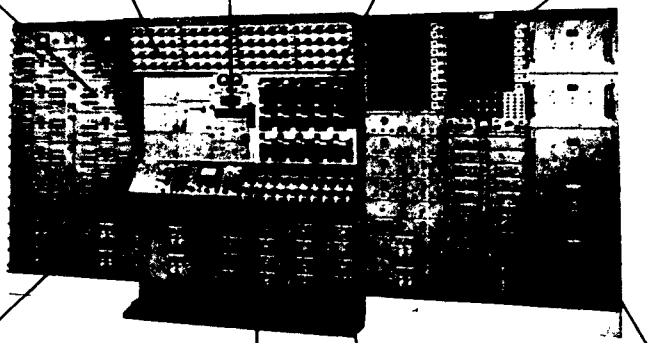

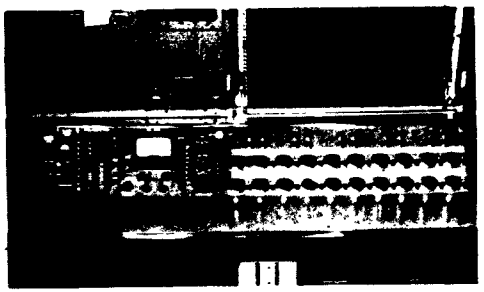

The control panel contains start and stop switches, as well as means for reading any voltage in the system.

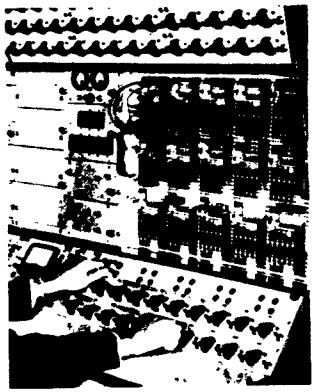

Next to it is a removable patch board that is used to interconnect the basic components in any of the millions of configurations that may represent a particular problem.

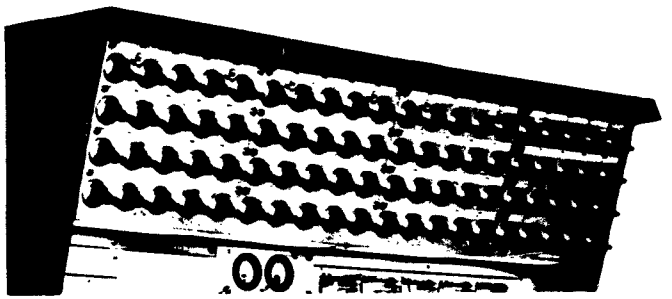

Above control/patch panels are banks of potentiometers used to set in the numbers representing the parameters of the problem and boundary conditions.

The basic components of the computer perform such mathematical operations as addition, subtraction, multiplication, division, integration, and the computation of analytic or empirical functions (i. e. sines, cosines, etc.). All of the operations required to establish a model of the ray tracing system are readily available.

The basic components, their electrical form, program symbol, and mathematical function are shown in the Table. Assorted view of the PACE General Purpose Analog Computer used in the study are given in the photographs.

EXAMPLE OF COMPUTER RESULTS

The following diagram is an example of the results obtained from the analog computation. The upper figure shows how a set of rays travel at 14 meg. and illustrates the restricted initial angle required to obtain trapping in a plasma duct.

INSTRUMENTATION OF THE REQUIRED EQUATIONS

Page 1 of the analog computer program that was developed by the Research and Computation Division of Electronic Associates, Incorporated, generates the actual integration of the three (3) specified differential equations. The upper right hand side of this page has the integrator that generates r. Directly below this portion of the computer program is another integrator that performs the integration that produces the quantity α. The top left center portion of this page has the integrator that generates the quantity θ. Directly after the α and $\dot{\theta}$ integrators, one will notice two (2) 8.054 devices. These devices are solid state sinusoid generators that produce the required trigonometric functions of the angles. The lower right hand corner of Page 1 has an amplifier that

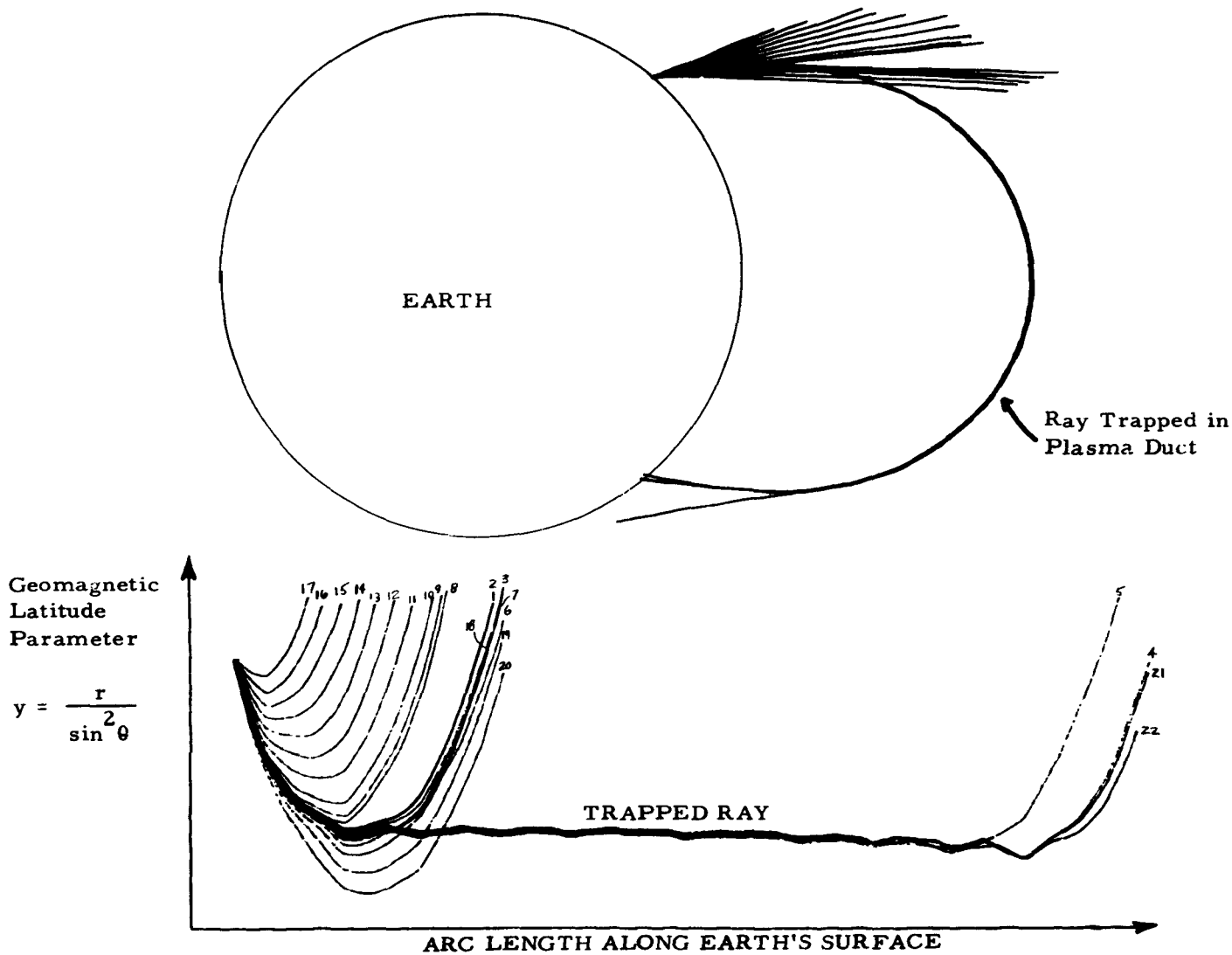
EARTH
Ray Trapped in Plasma Duct
Geomagnetic Latitude Parameter
$y = \frac{r}{\sin^2\theta}$
TRAPPED RAY
ARC LENGTH ALONG EARTH'S SURFACE

generates the quantity $40\left[\cos\alpha - 2\cot\theta\right]$. Directly before this amplifier, one will notice that there are two (2) Diode Function Generators (DFG) that produce $40\cos\alpha$ and $80\cot\theta$. Associated with each DFG there are two (2) sets of relay contacts. For explanation of these relays see section entitled NOTES ON INSTRUMENTATION OF REQUIRED SYSTEM.

Page 2 of the computer program is devoted entirely to function generation. The functions that are generated on this page are m(r), dF(r)/dr and F(r). The m(r) function is generated in the left section of the page. The dF(r)/dr function is generated in the center portion of the page, and the F(r) function is generated in the right hand portion of page 2. The m(r) function is generated by an amplifier and a bridge limiter. The function generation of dF(r)/dr and F(r) employs amplifiers, bridge limiters, and DFG's. For an explanation of these circuits see NOTES ON INSTRUMENTATION OF REQUIRED SYSTEM.

Page 3 of the analog computer program generates the remainder of the terms and functions required by the equations. These quantities are dc(y)/dy, $\partial\mu/\partial r$, $\partial\mu/\partial\theta$, and c(y). In addition to these terms, this page contains the automatic cycling circuit that places the computer in HOLD at various points in the solution. This control circuit may be found in the upper right hand portion of the page. For an explanation of this circuit see section entitled AUTOMATIC CYCLING CIRCUIT. The dc(y)/dy function is generated in the lower left hand portion of page 3. For an explanation of its operation see NOTES ON INSTRUMENTATION OF REQUIRED SYSTEM. The relays that are shown on page 3 insure that when m(r) or dc(y) are zero, then any multiplication by them is indeed a flat zero.

Notes on Instrumentation of Required System

1. Relays Shown on Page 1 of Computer Program. These relays are used to reverse the drive to the associated DFG and to invert the output of the same DFG. One will notice that the function programmed on the DFG is the

contangent of some angle. The angles, that are present in this simulation have their ranges well defined and as a result their contangents may be calculated and placed on DFG's. Because the range of the angles is symmetrical about 90 degrees, the contangent function is symmetrical about zero, and all that is required is to program half the function and attach the appropriate sign to the output. The relays associated with each DFG accomplish the required operations.

2. Function Generation Page 2 of the Computer Program -

A. m(r) is generated by means of an amplifier and a bridge limiter. The amplifier has an output of zero up until such time as the value of r becomes equal to r_{c_1}. When r is greater than r_{c_1}, the amplifier has some output that is equal to the value of m(r) at that point. The bridge limiter is used to hold m(r) at its maximum value beyond the point r_{c_2}. The potentiometer in the feedback path of the amplifier allows the slope of the function to be adjusted. The m(r) function is as follows:

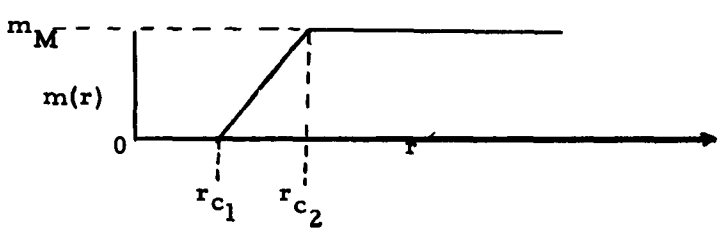

B. The dF(r)/dr function is generated as follows:

$$\frac{dF(r)}{dr} = \left(\frac{dF(r)}{dr}\right)_1 + \left(\frac{dF(r)}{dr}\right)_2$$

$\left(\frac{dF(r)}{dr}\right)_1$ is a nonanalytic function and with rapidly changing slopes.

$\left(\frac{dF(r)}{dr}\right)_2$ is an analytic function with gradually changing slopes.

The $(dF(r)/dr)_1$ function is broken up into two sections. One section is simulated using amplifiers and bridge limiters while the other section is instrumented using a DFG. The amplifiers are used to generate straight line segments that approximate the function fairly well. The DFG contains an error function that is added to the straight line segments. This summation of the two sections produces the required function.

C. The F(r) function is generated in the same manner as dF(r)/dr. (see above for details).

3. The relays that are shown in the lower right hand portion of page 2 are used to switch between the first and second portion of the required function. The way in which they are inserted in the problem prevents any discontinuity in the functions.

4. The dc(y)/dy function is generated on page 3 in the lower left hand portion of the page. The function is generated in two parts such that when they are added the total required function is generated. The equipment required to generate the function is explained in detail in APPENDIX I of this Technical Report.

5. The circuit that generates dc(y)/dy was programmed separate from the rest of the computer program and its output integrated to give the required C(y) function. The output of the integration was plotted and the resultant function was then set up on a DFG. This DFG is in the center of page 3 of the computer program.

Automatic Cycling Circuit

Due to the large amount of switching that is necessary in this computer program, it was necessary to have the computer go into HOLD at certain particular points in the solution. To insure that the machine would go to HOLD at the same point each time, it was necessary to develop a circuit that would accomplish this task. The circuit that was developed is shown in full detail in APPENDIX II of this Technical Report.

Formation of Difference of Geomagnetic Height Within Duct

Since the formation of Δy for input to the c(y) circuit requires the accurate subtraction of two large numbers which are very close to each other, a technique is required to overcome this great error potential. The method adopted here is to compute an integral.

$$\Delta y = \int_{y_1}^{y_2} dy$$

which represents the difference, instead of actually performing a subtraction. Since the computer independent variable is s we must form

$$\Delta y = \int_{y_1}^{y_2} dy = \int \frac{dy}{ds}\, ds = \int \left(\frac{\partial y}{\partial r} \frac{dr}{ds} + \frac{\partial y}{\partial \theta} \frac{d\theta}{ds} \right) ds$$

since $y = \dfrac{r}{\sin^2 \theta}$

$$\Delta y = \int \left[\frac{1}{\sin^2 \theta} \left[\cos\alpha\right] + \left[\frac{r \cdot 2 \cos\theta}{\sin^3 \theta} \right] \left(\frac{1}{r} \sin\alpha \right) \right] ds$$

$$\Delta y = \int \frac{\sin\alpha}{\sin^2 \theta} \left[\operatorname{ctn}\alpha - 2 \operatorname{ctn}\theta \right] ds$$

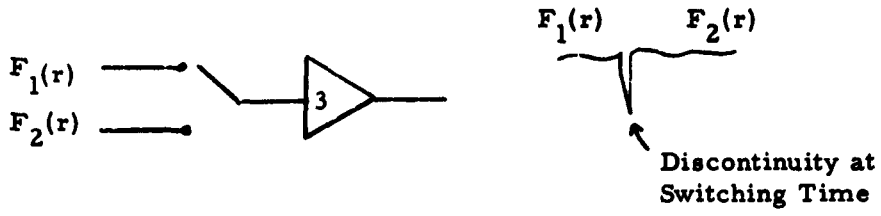

Potentiometer Assignment Sheets

The potentiometer Assignment Sheets list all the potentiometers that are used in the computer program, together with their settings for the static check conditions. A copy of these sheets may be found in APPENDIX III.

Amplifier Assignment Sheets

The Amplifier Assignment Sheets list all of the amplifiers that are used in the computer program, together with their calculated and measured values for the static check conditions. A copy of these sheets may be found in APPENDIX IV.

Computer Program Static Check (Theoretical)

The Theoretical Static Check is a mathematical calculation performed on the basic equations without considering any scale factors. A set of conditions is chosen and then all required calculations are performed until every quantity that is required by the computer program has been calculated. A copy of the theoretical static check is provided in APPENDIX V.

Computer Program Static Check (Voltage)

The Voltage Static Check of the computer program is provided to enable the computer operator to verify the outputs of the various computation elements against the Theoretical Check values. The voltage static check is the same as the theoretical one except that all scale factors must be considered. A copy of the voltage static check may be found in APPENDIX VI.

REFERENCES

1. Radio Waves in the Ionosphere, K.G. Budden, Cambridge University Press, 1961.

2. Exploratory Programming Studies for Ionospheric Ray Tracing, Contract No. AF(604)-7294.

APPENDIX I

THE FUNCTION $dc(y)/dy$ IS DEFINED TO BE AS FOLLOWS:

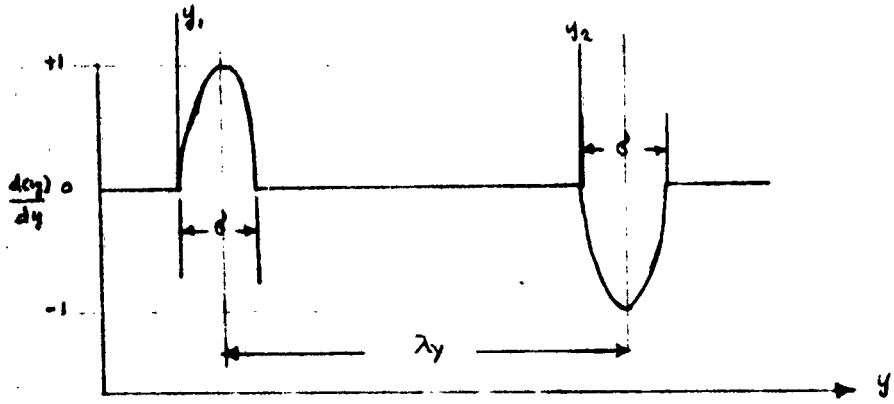

$\delta = 1/2$ KM $\quad \lambda_y$ = 10 KM; 25 KM; 50 KM; 75 KM; 100 KM AND 200 KM

THE SHAPE OF THE PULSE IS SINUSOIDAL WITH THE MAXIMUM VALUE OF 1.0 BEING ACHIEVED AT $\delta/2$.

THE METHOD OF INSTRUMENTATION FOR THIS FUNCTION EMPLOYS THE USE OF ELECTRONIC ASSOCIATES INC. MODEL 8.054 ELECTRONIC SINUSOID GENERATORS. THIS ELECTRONIC DEVICE PERFORMS THE FUNCTION OF A RESOLVER. (ie WHEN A VOLTAGE PROPORTIONAL TO AN ANGLE IS SUPPLIED TO THE DEVICE THE OUTPUT OF THE SINUSOID GENERATOR IS EQUIVALENT TO 100 SIN OR 100 COS OF THE REQUIRED ANGLE.)

BECAUSE THE SHAPE OF THE PULSE IS SINUSOIDAL, ALL THAT IS REQUIRED IS THE CORRECT METHOD OF OBTAINING THE INPUT. THE FOLLOWING INFORMATION AS TO THE 8.054 SINUSOID GENERATOR WILL PROVE VALUABLE.

INPUT VOLTAGE	OUTPUT VOLTAGE	
00.00	00.00	(SIN 0°)
22.50	+70.70	(SIN 45°)
45.00	+100.00	(SIN 90°)
67.50	+70.70	(SIN 135°)
90.00	00.00	(SIN 180°)

ELECTRONIC ASSOCIATES, INC.
PRINCETON COMPUTATION CENTER
BOX 582, PRINCETON, N. J.

BY R.B. | SUBJECT COMPUTER CIRCUIT FOR GENERATION OF $dc(y)/dy$ FUNCTION GENERATION | SHEET NO. 2 OF 2
DATE 8/20/62 | PROJ. NO. 4700

THE FOLLOWING CIRCUIT WAS USED TO GENERATE THE REQUIRED $dc(y)/dy$.

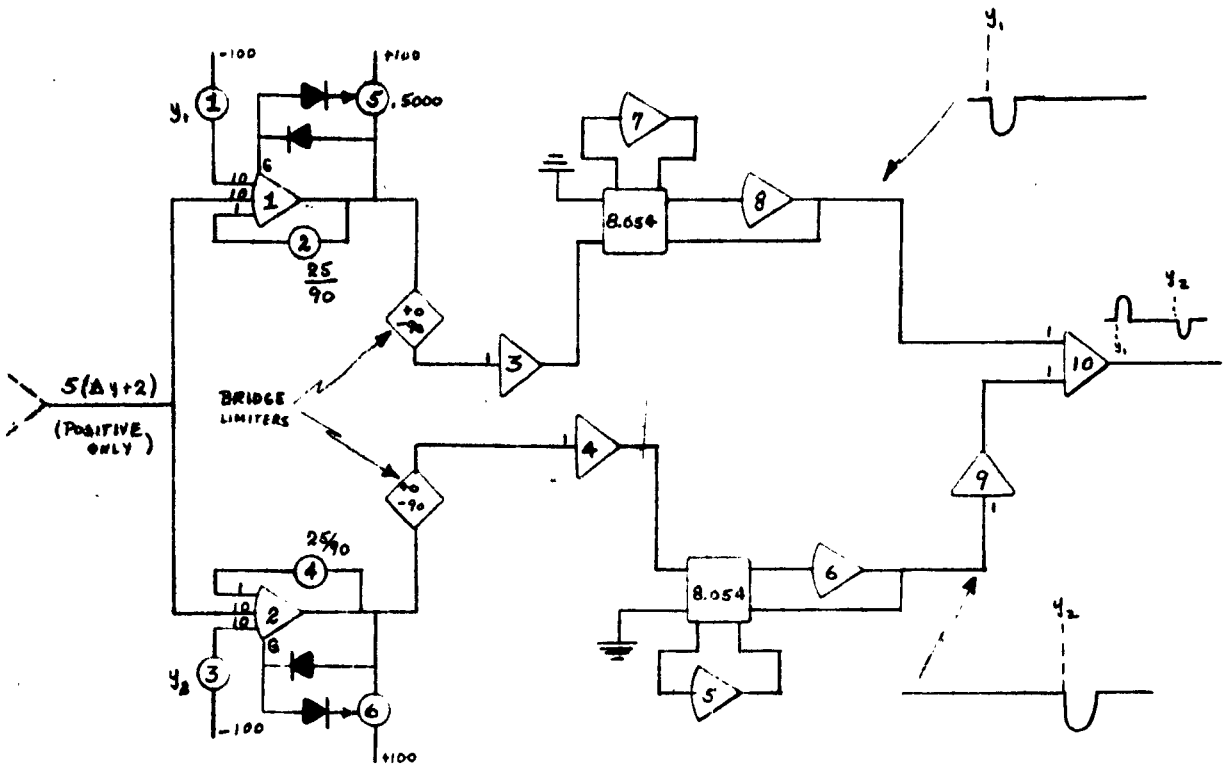

1) AMPLIFIERS 1 + 2 PROVIDE THE CORRECT INPUT VOLTAGE BOTH MAGNITUDE AND SIGN.

2) THE BRIDGE LIMITERS PROVIDE THE CORRECT CUTOFF VOLTAGES.
3) AMPLIFIERS 3 + 4 ISOLATE THE BRIDGE LIMITERS FROM THE 8.054 UNITS.
4) AMPLIFIERS 5, 6, 7 AND 8 ARE REQUIRED BY THE 8.054 UNITS.
5) AMPLIFIER 9 IS USED AS AN INVERTING AMPLIFIER.
6) AMPLIFIER 10 IS USED TO COMBINE THE ELEMENTS THAT FORM $\frac{dc(y)}{dy}$

THE FUNCTION $C(y)$ IS ACHIEVED BY INTEGRATING $dc(y)/dy$. $C(y)$ IS THEN PLACED ON A DIODE FUNCTION GENERATOR.

$dc(y)$

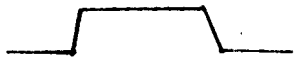

$C(y)$

ELECTRONIC ASSOCIATES, INC.
PRINCETON COMPUTATION CENTER
BOX 582, PRINCETON, N. J.

BY RB
DATE 8/20/62
SUBJECT COMPUTER CIRCUIT FOR GENERATION OF dc(y)/dy FUNCTION GENERATION
SHEET NO. 2 OF 2
PROJ. NO. 4700

THE FOLLOWING CIRCUIT WAS USED TO GENERATE THE REQUIRED dc(y)/dy.

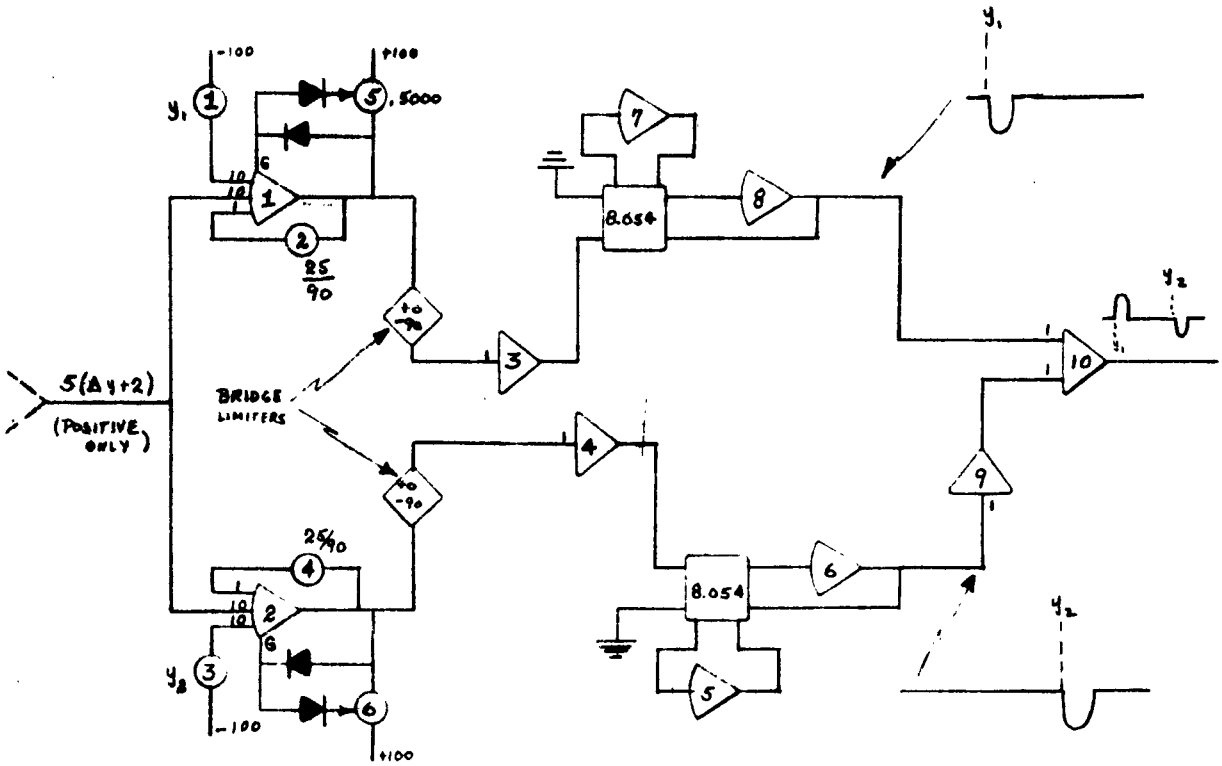

1) AMPLIFIERS 1 + 2 PROVIDE THE CORRECT INPUT VOLTAGE BOTH MAGNITUDE AND SIGN.

2) THE BRIDGE LIMITERS PROVIDE THE CORRECT CUTOFF VOLTAGES.
3) AMPLIFIERS 3 + 4 ISOLATE THE BRIDGE LIMITERS FROM THE 8.054 UNITS.
4) AMPLIFIERS 5, 6, 7 AND 8 ARE REQUIRED BY THE 8.054 UNITS.
5) AMPLIFIER 9 IS USED AS AN INVERTING AMPLIFIER.
6) AMPLIFIER 10 IS USED TO COMBINE THE ELEMENTS THAT FORM $\frac{dc(y)}{dy}$

THE FUNCTION C(y) IS ACHIEVED BY INTEGRATING dc(y)/dy. C(y) IS THEN PLACED ON A DIODE FUNCTION GENERATOR.

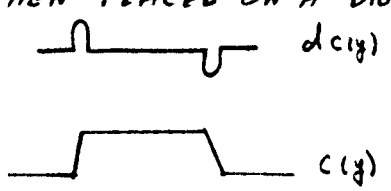

ELECTRONIC ASSOCIATES, INC.
PRINCETON COMPUTATION CENTER
BOX 582, PRINCETON, N. J.

BY RB
DATE 8/20/62

SUBJECT COMPUTER CHANGES FOR VARING CHANNEL WIDTHS

SHEET NO. 1 OF 1
PROJ. NO. 4700

CHANNEL WIDTH (λ_y)	SCALE OF $dc(y)/dy$ + $c(y)$ DRIVE	POT NO P40	Q40
10 KM	$5(\Delta y + 2)$	.3333	.1000
25 KM	$2(\Delta y + 5)$	.1322	.1000
50 KM	$(\Delta y + 10)$	.0666	.1000
75 KM	$2/3(\Delta y + 15)$	.0444	.1000
100 KM	$5\times10^{-1}(\Delta y + 20)$	.0333	.1000
200 KM	$2.5\times10^{-1}(\Delta y + 40)$	.0167	.1000

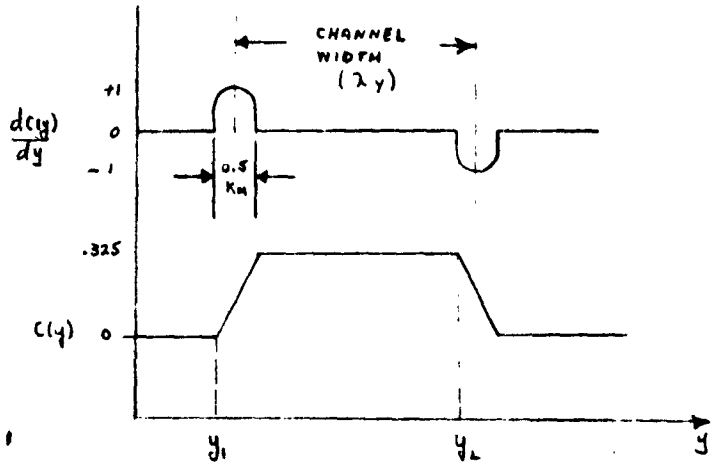

APPENDIX II

BY RB
DATE 8/20/62

SUBJECT COMPUTER CIRCUIT FOR AUTOMATIC CYCLING OF COMPUTER

SHEET NO. 1 OF 3
PROJ. NO. 4700

F.L. = FEEDBACK LIMITER

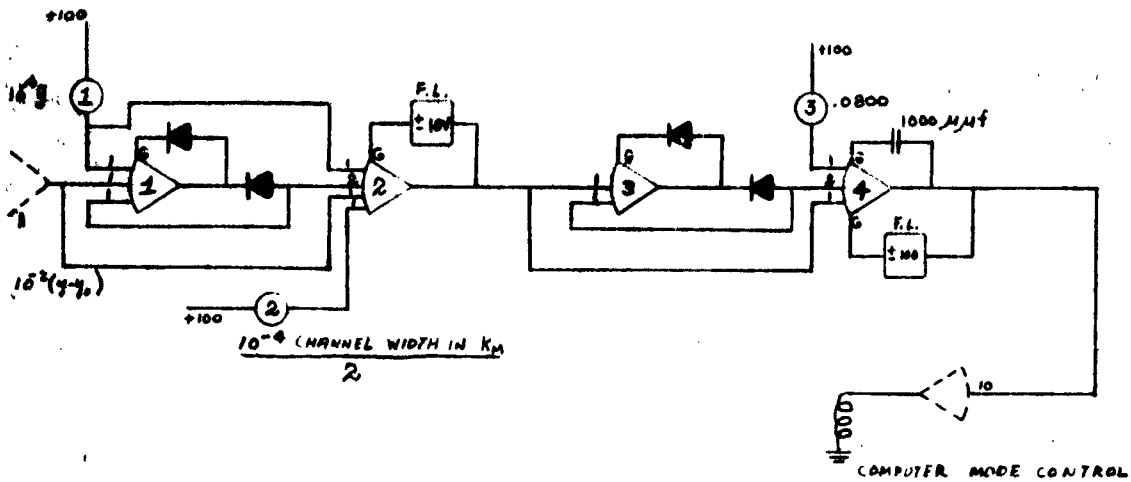

OPERATIONAL NOTES

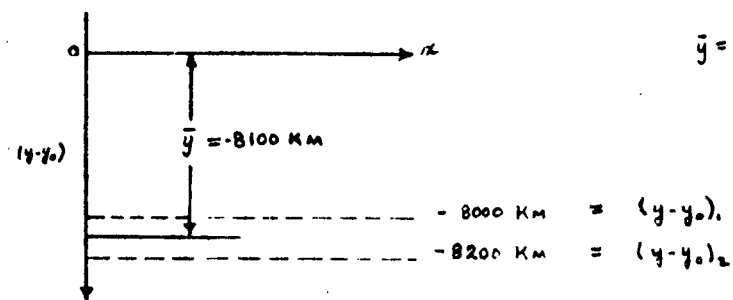

$\bar{y}$ = MID POINT OF CHANNEL MEASURED FROM $(y-y_0) = 0$.

FIGURE 1

IF IT IS DESIRED TO PLACE THE DUCTING CHANNEL AT A VALUE OF $(y-y_0) = -8{,}000$ KM AND THE CHANNEL IS TO BE 200 KM WIDE THEN THE VALUES SHOWN IN FIGURE 1 ARE REQUIRED TO HAVE THE MODE CONTROL OF THE COMPUTER FUNCTION PROPERLY. THE MODE CONTROL CIRCUITRY SHOWN ABOVE IS NOTHING MORE THAN TWO (2) ABSOLUTE VALUE CIRCUITS IN CASCADE, EACH OF WHICH HAS AN ADDITIONAL INPUT FROM A POT.

THE OUTPUTS OF AMPLIFIERS 1 AND 3 WILL BE NEGATIVE OR ZERO. THE OUTPUT OF AMPLIFIER 2 WILL BE ±10 VOLTS DEPENDING UPON THE SUMMATION OF ITS INPUTS. THE OUTPUT OF AMPLIFIER 4 WILL BE ±100 VOLTS DEPENDING UPON THE SUMMATION OF ITS INPUTS. THE 1000 μμf CAPACITOR AROUND AMPLIFIER 4 IS USED TO SHAPE THE PULSE THAT DRIVES THE MODE CONTROL RELAY. POT #3 IS USED TO BIAS THE CONTROL PULSE.

FOR THE CONDITIONS SPECIFIED IN FIGURE 1 POT #1 HAS A SETTING OF 0.8100 AND POT #2 A SETTING OF 0.8100.

NOW THAT THE VARIOUS ELEMENTS OF THE CYCLING CIRCUIT HAVE BEEN DEFINED CONSIDER THE CIRCUIT OPERATION.

1) AS LONG AS THE OUTPUT OF THE DOTTED AMPLIFIER IS LESS THAN THE OUTPUT OF POT #1, THE OUTPUT OF AMPLIFIER #1 IS NEGATIVE.

2) THE NEGATIVE VOLTAGE AT THE OUTPUT OF AMPLIFIER #1 IS COMPARED WITH THE POSITIVE OUTPUTS OF POTS #1 AND #2 AT THE GRID OF AMPLIFIER #2.

3) CONSIDER THE CASE WHERE $(y-y_0) < (y-y_0)_1$. ASSUME THAT $(y-y_0) = -7000$ KM
THE OUTPUT OF DOTTED AMPLIFIER IS -70.00 VOLTS
THE OUTPUT OF POT #1 IS +81.00 VOLTS
THE OUTPUT OF AMPLIFIER #1 IS -11.00 VOLTS
THE OUTPUT OF POT #2 IS +1.00 VOLTS

4) THE SUMMATION OF INPUTS AT THE GRID OF AMPLIFIER #2 IS -10.00 VOLTS
ie $(+81.00 - (11.00)(2) - (70.00) + 1.00) = -10.00$ VOLTS

5) THE OUTPUT OF AMPLIFIER #2 IS +10.00 VOLTS. WHEN THE OUTPUT OF AMPLIFIER #2 IS POSITIVE THE RAY BEING TRACED IS OUTSIDE THE DUCTING CHANNEL

6) THE OUTPUT OF AMPLIFIER #3 IS -10.00 VOLTS

7) THE OUTPUT OF AMPLIFIER #4 IS +100 VOLTS AND THE COMPUTER IS IN OPERATE,
ie $-(+10.00 - (10.00)(2) + 8.00) = +2.00$ VOLTS
EVEN THOUGH THE ACTUAL SUMMATION OF THE INPUTS IS ONLY -2.00 VOLTS THE AMPLIFIER HAS ONLY A LIMITER FOR FEEDBACK AND THEREFORE THE OUTPUT GOES INTO THE CORRECT LIMIT.

8) AS THE OUTPUT OF THE DOTTED AMPLIFIER BECOMES CLOSER AND CLOSER TO THE VALUE OF POT #1 THE OUTPUT OF AMPLIFIER #1 BECOMES LESS AND LESS NEGATIVE. FOR THE CASE UNDER STUDY WHEN THE OUTPUT OF THE DOTTED AMPLIFIER BECOMES -80.00 VOLTS THE OUTPUT OF AMPLIFIER #1 IS -1.00 VOLTS. THE OUTPUT OF AMPLIFIER #2 BECOMES -10.00 VOLTS. AMPLIFIER 03 BECOMES ZERO. THE OUTPUT OF AMPLIFIER #4 BECOMES +100.00 VOLTS.
NOTE: AS AMPLIFIER #2 WENT FROM +10.00 VOLTS TO -10.00 VOLTS THERE WAS A PULSE CREATED OUT OF AMPLIFIER #4 THAT PLACED THE COMPUTER IN HALD

THE OUTPUTS OF THE VARIOUS COMPONENTS OF THE CIRCUIT.

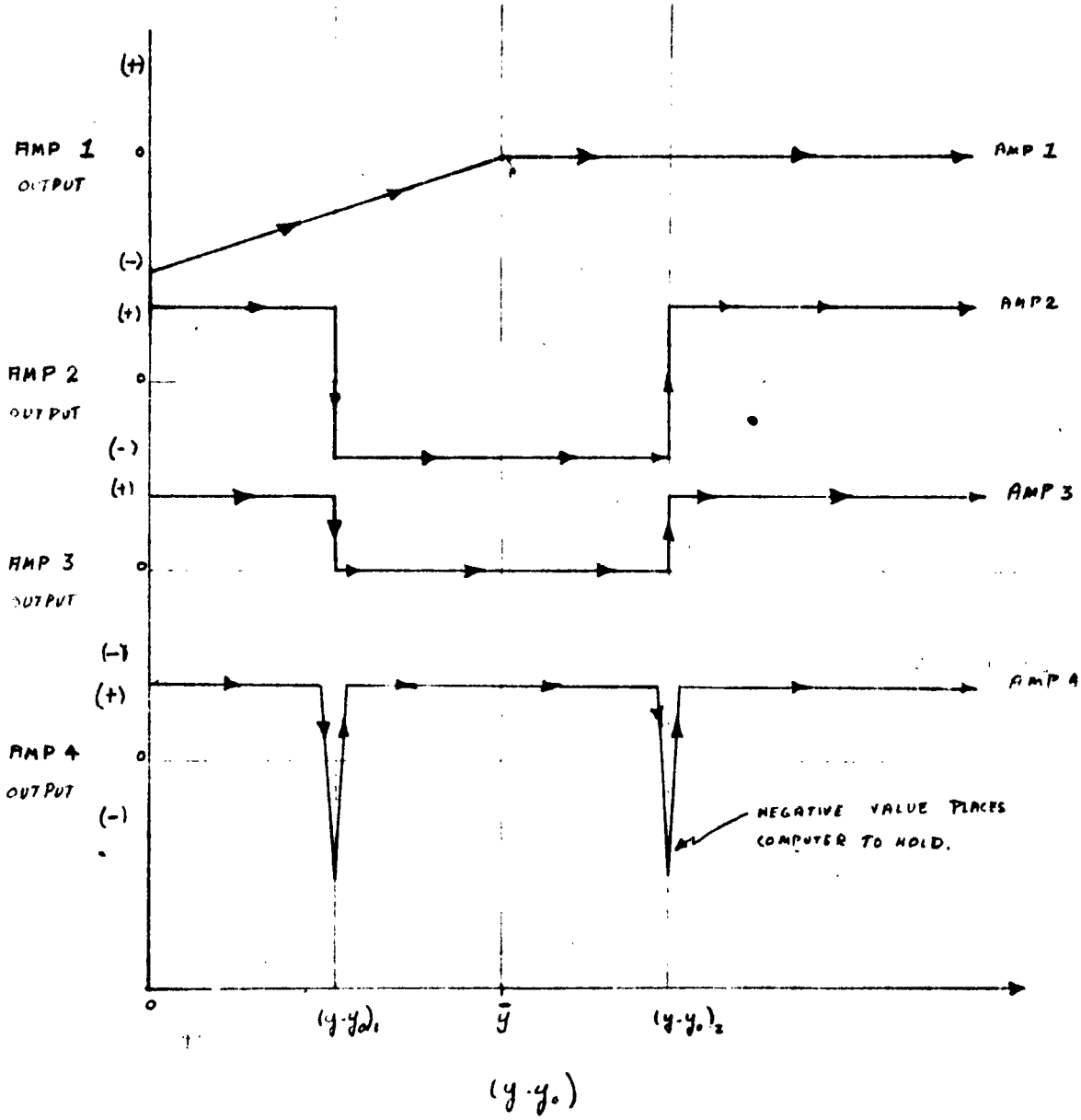

APPENDIX III

1

B COMPUTER
8/1/62
CAMBRIDGE RESEARCH
PROJ. 4700
R.B.

Electronic A
Princeton Co
BOX 582 PRINCETON, N.

POTENTIOMETER ASSIGNMENT SHEET

POT. NO.	SETTING RUN NO. STATIC CHECK	SETTING RUN NO.	SETTING RUN NO.	SETTING RUN NO.	NOTES $\beta = 10^{-3}$	PARAMETER DESCRIPTION	POT. NO.
P00	.2045				α° STATIC CHECK = 40.9	$(\alpha^\circ/200)_0$	P00
Q00	.1146					$(57.3)(1\times10^{-6}/\beta$	Q00
P01	.3000				θ STATIC CK = 60°	$(\theta^\circ/200)_0$	P01
Q01	.1146					$(57.3)(10^{-6}/\beta)$	Q01
P02	.9551				$\beta_1 = 10^{-2}$	$(57.3/2)(10^{-4}/\beta_1)$	P02
Q02							Q02
P03							P03
Q03							Q03
P04	.3333						P04
Q04	.4500						Q04
P05	.3563				r_0 STATIC CHECK = 7125 KM	$(5\times10^{-5}r)_0$	P05
Q05	.0500					$(5\times10^{-5}/\beta)$	Q05
P06	.1000					SF	P06
Q06							Q06
P07							P07
Q07							Q07
P08	.3400					$10e_1$	P08
Q08	.1250					SF	Q08
P09	.4500					SF	P09
Q09	.3335						Q09
P10	.0010						P10
Q10	.0000						Q10
P11	.0245						P11
Q11	.0202						Q11
P12	.0009						P12
Q12							Q12
P13	.0436						P13
Q13							Q13
P14							P14
Q14	.3345					$(5\times10^{-5}).(6690)$	Q14

—c Associates, Inc
Computation Center
TON, N.J. PHONE PRINCETON 1-2291

2

EET

SHEET 1 OF 2

POT. NO.	SETTING RUN NO. STATIC CHECK	SETTING RUN NO.	SETTING RUN NO.	SETTING RUN NO.	NOTES	PARAMETER DESCRIPTION	POT. NO.
P15	.3334						P15
Q15							Q15
P16							P16
Q16	.8500				$e_1 = 0.034$	$2.5e_1$	Q16
P17							P17
Q17	.5000				DIAL	LIMIT	Q17
P18							P18
Q18	.5000				DIAL	LIMIT	Q18
P19							P19
Q19	.5000				DIAL	LIMIT	Q19
P20							P20
Q20							Q20
P21							P21
Q21							Q21
P22	.0400				4×10^{-2}	SF	P22
Q22							Q22
P23							P23
Q23	.2500					SF	Q23
P24							P24
Q24	.3435					5×10^{-5} r_{el}	Q24
P25	.0340					e_1	P25
Q25	.0340				$e_1 = 0.034$	e_1	Q25
P26							P26
Q26							Q26
P27							P27
Q27	.5000				DIAL	LIMIT	Q27
P28							P28
Q28	.5000				DIAL	LIMIT	Q28
P29							P29
Q29							Q29

M354

1

B COMPUTER
8/1/62
CAMBRIDGE RESEARCH
PROJ. #700
RB

Electronic
Princeton Co
BOX 582 PRINCETON, N

POTENTIOMETER ASSIGNMENT SHEE

POT. NO.	SETTING RUN NO. STATIC CHECK	SETTING RUN NO.	SETTING RUN NO.	SETTING RUN NO.	NOTES	PARAMETER DESCRIPTION	POT. NO.
P30							P30
Q30	.1766					200 MM/Δr_c	Q30
P31							P31
Q31							Q31
P32							P32
Q32							Q32
P33							P33
Q33							Q33
P34							P34
Q34	.3685						Q34
P35							P35
Q35							Q35
P36							P36
Q36							Q36
P37							P37
Q37	.5000				DIAL	LIMIT	Q37
P38							P38
Q38	.5000				DIAL	LIMIT	Q38
P39							P39
Q39	.5000				DIAL	LIMIT	Q39
P40	.0333				$\beta_1 = 10$	$10^{-3}/\beta_1$	P40
Q40	.0999					0.1000	Q40
P41	.0048					RELAY BIAS M_L + M_T	P41
Q41	.0050					CHANNEL WIDTH/Ω	Q41
P42							P42
Q42	.5861					$\bar{y}^2$ = MID-CHANNEL	Q42
P43							P43
Q43							Q43
P44							P44
Q44	.3000				FOR PLOTTING		Q44

·onic Associates, Inc
ceton Computation Center
2 PRINCETON, N.J. PHONE PRINCETON 1-2291

NT SHEET

POT. NO.	POT. NO.	SETTING RUN NO. STATIC CHECK	SETTING RUN NO.	SETTING RUN NO.	SETTING RUN NO.	NOTES	PARAMETER DESCRIPTION	POT NO.
P30	P45							P45
Q30	Q45	.8500					$2\epsilon_1$	Q45
P31	P46							P46
Q31	Q46	.7709					$5\times10^{-5}\ y_0$	Q46
P32	P47							P47
Q32	Q47	.5000				DIAL	LIMIT	Q47
P33	P48	0.2000					SF	P48
Q33	Q48	.2224					$2\times10^{-3}\ a/57.3$	Q48
P34	P49							P49
Q34	Q49	.4446					$10^{-4}a\ \theta_0^\circ/57.3$	Q50
P35	Q50	.2942					$2(1.471)/10$	Q50
Q35	Q51	.4000					SF	Q51
P36	Q52							Q52
Q36	Q53							Q53
P37	Q54							Q54
Q37	Q55	.6620					$(1.471\times 90/200$	Q55
P38	Q56	.9000					SF	Q56
Q38	Q57							Q57
P39	Q58							Q58
Q39	Q59	.0580						Q59
P40	Q60	.3435				$r_{c_1} = 6870$	$5\times10^{-5}\ r_{c_1}$	Q60
Q40	Q61	.3287					5×10^{-5} (6574 KM)	Q61
P41	Q62	.3186				$r_0 = 6370$	$5\times10^{-5}\ r_0$	Q62
Q41	Q63	.1764						Q63
P42	Q64	.4704						Q64
Q42	Q65	.0288					$r_{c_2} - r_{c_1}/4\times10^4\ M_m$	Q65
P43	Q66							Q66
Q43	Q67	.1667				SF	$5\times10/3\times10^{-1}$	Q67
P44	Q68	.2586						Q68
Q44	Q69	.4730						Q69

M35

B COMPUTER
8/1/62
CAMBRIDGE RES.
PROJ 4700
RB

Electronic Associates, Inc

Princeton Computation Center

BOX 582 PRINCETON, N.J. PHONE PRINCETON 1-8881

POTENTIOMETER ASSIGNMENT SHEET

POT. NO.	SETTING RUN NO.	SETTING RUN NO.	SETTING RUN NO.	SETTING RUN NO.	NOTES	PARAMETER DESCRIPTION	POT. NO.
Q70	.0656				a=6370	$10^2(4.18)/a$	Q70
Q71							Q71
Q72	.1726						Q72
Q73	.6654						Q73
Q74	.2500				SF	1/4	Q74
Q75							Q75
Q76							Q76
Q77	.3784						Q77
Q78	.6772						Q78
Q79	.5000				SF	1/2	Q79
Q80							Q80
Q81	.5750					$5\times10^{-3}(11,500)$	Q81
Q82	.3235						Q82
Q83	.8251						Q83
Q84	.3279						Q84
Q85							Q85
Q86	.4255				SF	$5\times10^{-3}/1.175\times10^{-2}$	Q86
Q87	.5370						Q87
Q88	.7370						Q88
Q89	.7080						Q89
Q90							Q90
Q91							Q91
Q92	.3305						Q92
Q93	.0500				SF	1/20	Q93
Q94							Q94
Q95							Q95
Q96							Q96
Q97	.2667						Q97
Q98	.1000				SF	1/10	Q98
Q99							Q99

M354

ELECTRONIC ASSOCIATES, INC.
LONG BRANCH, NEW JERSEY

BY: RB
DATE: 8/9/62

SUBJECT: POT SHEET FOR "C" MACHINE

SHEET NO. 1 OF
PROJ. NO. 4700

POT No	SETTING	PARAMETER
P00	0.8215	0.8215
P02	0.8215	0.8215
Q02	0.1785	0.1785
P04	0.0319	1/31.38
Q08	0.0800	0.08
P17	0.1000	0.1000
Q17	0.2778	25/90
P18	0.6000	0.6000
Q18	0.2778	25/90
Q06	0.6749	0.6749
Q24	.0798	Pulse bias
P05	.9953	
6	.0000	
7	.9951	
8	.0000	

APPENDIX IV

ELECTRONIC ASSOCIATES INC.
EDUCATION & TRAINING GROUP

231 R AMPLIFIER ASSIGNMENT SHEET

PROBLEM 407

DATE 8/9/62

AMP NO.	FB	FUNCTION, AND / OR VARIABLE	STATIC CHECK				NOTES
			CALCULATED		MEASURED		
			CHECK PT	OUTPUT	CHECK PT	OUTPUT	
00	I	$\alpha^\circ/2$	-29.51	+20.45	-29.51	+20.45	
1	I	$\theta^\circ/2$	+26.327	+[illegible]	+26.27	+30.00	
2	None	cos α - trig card - 1A				-41.[illegible]4	
3	None	-100 cos α		-75.[illegible]5		-75.[illegible]	
4	S'G	NOTE 1		+51.[illegible]		+51.4[illegible]	
5	I	$5 \cdot 10^{-3}$ r	+37.79	+35.625	+37.75	+35.62	
6	S	$-5 \cdot 10^{-3}$ r		-35.625		-35.62	
7	None	sin α - trig card - 1B				+6.[illegible]7	
8	None	-100 sin α		-65.474		-65.38	
9	S	40 [cot α - 2 cot θ]		-0.015		+0.06	
10	S	NOTE 5		+4.266		+4.21	
1	S	-10^2 F(r)[1+[illegible] Cy.] [illegible] θ		-37.55		-37.60	
2	None	cos θ - trig card - 1C				-60.63	
3	None	-100 cos θ		-50.[illegible]0		-49.95	
4	S'G	$5 \cdot 10^5 \sin\alpha / r$		+45.946		+45.[illegible]4	
5	S	$-5 \cdot 10^5 \frac{d\theta}{ds}$		-45.946		-45.84	
6	S	NOTE 2		+6.35		+6.47	
7	None	sin θ - trig card - 1D				-0.05	
8	None	-100 sin θ		-86.60[illegible]		-86.[illegible]1	
9	S'G	NOTE 3		-5.546		-5.[illegible]4	

ELECTRONIC ASSOCIATES INC.
EDUCATION & TRAINING GROUP

231 R AMPLIFIER ASSIGNMENT SHEET

PROBLEM 407
DATE 8/9/62

AMP NO.	FB	FUNCTION, AND / OR VARIABLE	STATIC CHECK				NOTES
			CALCULATED		MEASURED		
			CHECK PT.	OUTPUT	CHECK PT.	OUTPUT	
20	S	−[OUTPUT A13]		+5.546		+5.64	
1	S	$5\times10^5 \frac{F(r)}{r} \cos\theta \cos\alpha [1+m(r)C(y)]$		+19.91		+19.80	
2	S'G	NOTE 6		−2.794		−2.84	
3	$N_{O_{N_E}}$	$10^2 F(r) \cos\theta \cos\alpha [1+m(r)C(y)]$		+28.38		+28.47	
4	S'G	−[OUTPUT A21]		−19.91		−19.80	
5	S	NOTE 7				+97.79	
6	S	−[OUTPUT A25]				−97.79	
7	$N_{O_{N_E}}$	$10^2 F(r) \sin\theta$		+65.04		+65.40	
8	$N_{O_{N_E}}$	$-10^4 \sin\theta \frac{dF(r)}{dr}$		+4.268		+4.21	
9	$N_{O_{N_E}}$	$-10^2 \cos\theta \; F(r)$		−37.55		−37.72	
30	S	NOTE 4		−3.31		−3.37	
1	S	$+10^2 F(r)[1+m(r)C(y)] \cos\theta$		+39.24		+39.40	
2	$N_{O_{N_E}}$	$+10^2 m(r) C(y)$		+4.50		+4.53	
3	$N_{O_{N_E}}$	$-10^4 m(r) C(y) \sin\theta \frac{dF(r)}{dr}$		+0.19		+0.22	
4	$N_{O_{N_E}}$	$-50 F(r) \sin\theta \; C(y)$		−6.50		−6.48	
5	S	$-10^2 F(r) \sin\theta$				−65.40	
6	S	$+5\times10^{-3} y$		+47.50		+47.65	
7	$N_{O_{N_E}}$	$-10^2 F(r) m(r) C(y) \cos\theta$		−1.69		−1.68	
8	$N_{O_{N_E}}$	$-5\times10^{-3} y$		−47.50		−47.62	
9	$N_{O_{N_E}}$	$+10^2 F(r) m(r) C(y) \sin\theta$		+2.93		+2.94	

ELECTRONIC ASSOCIATES INC.
EDUCATION & TRAINING GROUP

231 R AMPLIFIER ASSIGNMENT SHEET

PROBLEM 407
DATE 8/10/62

AMP NO.	FB	FUNCTION, AND / OR VARIABLE	STATIC CHECK				NOTES
			CALCULATED		MEASURED		
			CHECK PT.	OUTPUT	CHECK PT.	OUTPUT	
40	I	$+5(\Delta y+2)$		+11.25		+11.29	
1	S	$+50\,F(r)\,C(y)\sin\theta$		+6.50		+6.48	
2	$N_{Q_{N_E}}$	$+5\times10^{-3}\,r\sin\theta$		+30.85		+30.92	
3	$N_{Q_{N_E}}$	$+5\times10^{-3}\,r\cos\theta$		+17.81		+17.83	
4	$N_{Q_{N_E}}$	$-100\,\frac{F(r)}{\mu}\,\frac{\partial C(y)}{\partial y}$		-76.88		-76.60	
5	S	$+10^3 e_1\left[\sin\alpha+2\cos\alpha\cot\beta\right]$		+51.94		+51.94	
6	S	$10^{-2}(y-y_0)$					
7	$N_{Q_{N_E}}$	$+200\,\frac{F(r)}{\mu}\,\frac{m(r)}{\sin\theta}\,\frac{\partial C(y)}{\partial y}$		+34.95		+40.30	
8		NOTE 8		-103.75		-104.9	
9	$N_{Q_{N_E}}$	$-80\cos\alpha\cot\theta$		-34.91		-34.95	
50	S	$-1.471\left[\alpha^\circ-90^\circ\right]$		+72.23		+72.25	
1	S	$-2\left[\theta^\circ-90^\circ\right]$		+60.00		+60.02	
2	S	$2\left[\theta^\circ-90^\circ\right]$		-60.00		-60.02	
3	S	$+80\cot\theta$		-46.19		-46.23	$\theta>90^\circ$
4	S	$-40\cot\alpha$		-46.18		-46.34	$0<\alpha<90^\circ$
5	S	USED WITH DFG $F_6 0$					
6	S	$+100\sin\alpha$		+65.474		+65.38	
7							
8	S	$+200\,m(r)$				+45.32	
9	S	$+1.471\left[\alpha^\circ-90^\circ\right]$		-72.23		-72.20	

ELECTRONIC ASSOCIATES INC.
EDUCATION & TRAINING GROUP

231 R AMPLIFIER ASSIGNMENT SHEET

PROBLEM 407
DATE 8/10/62

AMP NO.	FB	FUNCTION, AND / OR VARIABLE	STATIC CHECK				NOTES
			CALCULATED		MEASURED		
			CHECK PT.	OUTPUT	CHECK PT	OUTPUT	
60	S'G	+ 200 m(r)				+45.45	F.L.09
1	S'G	+.86206 (r − 6574)		In limit		In limit	
2	S'G	+.3 (r − r₀)		In limit		In limit	
3	S'G	SEGMENT #1 $\frac{dF(r)}{dr}$		In limit		In limit	
4	S'G	SEGMENT #3 $\frac{dF(r)}{dr}$		In limit		In limit	
5	S	+ 100 sin θ		+86.603		+86.60	
6	S	+ 100 cos θ		+50.00		+49.95	
7	S	USED WITH DFG F₀6					
8	S	$+10^4 \left\{\frac{dF(r)}{dr}\right\}_2$		−4.929		−4.95	
9	S	Function Generation		−2.07		−2.30	
70	S	$+10^2 F(r) \cos\theta$				+3.72	
1	S	$+10^4 F(r) \sin\theta$				−4.29	
2	S'G	Segment #2 $\frac{dF(r)}{dr}$		In limit		In limit	
3	S'G	Segment #4 $\frac{dF(r)}{dr}$		In limit		In limit	
4	S'G	$+10^4 \left\{\frac{dF(r)}{dr}\right\}_1$		−7.00		−7.25	
5	S	Used with DFG F₀2					
6	S	-10^2 m(r) C(y)		−4.50		−4.53	
7	S	$-5\times10^{-1}\,\theta^{\circ}$					
8	S	$-10^4 \frac{dF(r)}{dr}$		+4.93		+4.95	
9	S	$+10^4 \frac{dF(r)}{dr}$		−4.93		−4.95	

ELECTRONIC ASSOCIATES INC.
EDUCATION & TRAINING GROUP

231 R AMPLIFIER ASSIGNMENT SHEET

PROBLEM 407
DATE 8/10/62

AMP NO.	FB	FUNCTION, AND / OR VARIABLE	STATIC CHECK				NOTES
			CALCULATED		MEASURED		
			CHECK PT.	OUTPUT	CHECK PT.	OUTPUT	
80	S	$-50\,C(y)$		-10.00		-10.00	
1	S'G	$-1.175\times10^{-2}(r-11{,}500)$		+51.406		+51.41	
2	S'G	Segment #1 $F(r)_1$		I_n limit		I_n	
3	S'G	Segment #2 $F(r)_1$		I_n		I_n	
4	S'G	Segment #3 $F(r)_1$		I_n		I_n	
5	X,3 INV	Used with DFG $F_6 3$					
6	S	$+100\ \frac{dC(y)}{dy}$		+100.00		+99.93	
7	S	$+10^2\ F(r)$		+75.10		+75.60	
8	S	$-10^2 F(r)_2$		-75.10		-75.58	
9	S	Function Generation		+29.40		-24.90	
90	S	$-200\ m(t)$				-45.32	
1	S	$10^{-2}a(\theta-\theta_0)_1 = 10^{-2}\alpha$					
2	S'G	Segment #4 $F(r)_1$		I_n		I_n	
3	S'G	$10^2\ F(r)_1$		+100.00		+99.43	
4	S	Plotting Amplifier					
5	X,4 INV	Used with DFG $F_6 4$					
6	S	$+100\ \frac{F(r)}{\mu}\left[\frac{dC(y)}{dy}\right]$		+76.88		+76.70	
7		Used with DFG $F_6 9$					
8	S	$-10^3 e_1[\sin\alpha + 2\cos\alpha\cot\theta]$		-51.94		-51.93	
9	S	$-10^2\ F(r)$		-75.10		-75.60	

ELECTRONIC ASSOCIATES, INC.
LONG BRANCH, NEW JERSEY

BY: [illegible] SUBJECT: Cambridge Research Amplifier Notes SHEET NO. 6 OF A Computer
DATE: [illegible] PROJ. NO.

① $5\times10^5\left[\frac{\sin\alpha}{r} + \frac{e_1}{\mu r}\left(1+m(r)C(y)\right)\cos\alpha\cos\theta - \frac{e_1}{\mu}\sin\alpha\sin\theta\frac{dF(r)}{dr} - \frac{e_1}{\mu}F(r)C(y)\sin\alpha\sin\theta\frac{dm(r)}{dr} - \frac{e_1}{\mu}m(r)C(y)\sin\alpha\sin\theta\frac{dF(r)}{dr}\right]$

② $2\times10^4\left[\frac{\left(1+m(r)C(y)\right)F(r)\cos\theta\cos\alpha}{r}\right] - 2\times\left[\text{NOTE 6}\right]$

③ $-\left\{\left[\text{NOTE 1}\right] - 5\times10^5\frac{\sin\alpha}{r}\right\}$

④ $10^4\left[\sin\theta\frac{dF(r)}{dr} + F(r)\sin\theta\, C(y)\frac{dm(r)}{dr} + \sin\theta\, m(r)\, C(y)\frac{dF(r)}{dr}\right]$

⑤ $-\left[\text{NOTE 4}\right]$

⑥ $10^4\sin\alpha\sin\theta\left[\frac{dF(r)}{dr}\left(1+m(r)C(y)\right) + \frac{dm(r)}{dr}F(r)C(y)\right]$

⑦ Without Modulation: $100\left[1-e_1F(r)\sin\theta\right]$

With Modulation: $100\left[1-e_1F(r)\sin\theta - e_1F(r)\sin\theta\, m(r)C(y)\right]$

⑧ $-10^4\frac{e_1F(r)m(r)}{\mu\sin\theta}\frac{\partial C(y)}{\partial y}\left[\sin\alpha + 2\cos\alpha\cot\theta\right]$

⑨

Amp	Parameter	St. Chk. Calc.	Output
$F_6 0$	$80\cot\theta$	+46.19	+46.30
$F_6 2$	$-40\cot\alpha$	+46.18	+46.34
$F_6 3$	$2\times10^4\,\Delta\left(\frac{dF(r)}{d(r)}\right)_1$	0.00	+0.50
$F_6 4$	$2\times10^2\,\Delta\left(dF(r)/dr\right)_1$	0.00	+0.50
$F_6 6$	$10^2\left(F(r)\right)_2$	+75.10	+75.60
$F_6 9$	$50\,C(y)$	+10.00	+10.00
$F_7 0$	$+100\cos\alpha$	+75.585	+75.50
$F_7 5$	$-0.3(r-r_0)$	In Limit →	
$F_7 6$	$-10^4\left(dF(r)/dr\right)_1$	+7.00	+7.25

ELECTRONIC ASSOCIATES, INC.
LONG BRANCH, NEW JERSEY

BY VP
DATE 8/20/62

SUBJECT Cambridge Research
Amplifier Notes

SHEET NO. 7 OF
PROJ. NO.

Amp	Parameter	St. Chk	Calc	Output
F7	$-80 \cot \theta$		-46.19	-46.25
F9	$-200 \frac{F(x)m(r)}{\mu \sin\theta} \frac{\partial C(y)}{\partial y}$		-39.95	-40.30

ELECTRONIC ASSOCIATES INC.
EDUCATION & TRAINING GROUP

231 R AMPLIFIER ASSIGNMENT SHEET

PROBLEM 4700 PROJECT C MACHINE

DATE 8/2/62

AMP NO.	FB	FUNCTION, AND / OR VARIABLE	STATIC CHECK				NOTES
			CALCULATED		MEASURED		
			CHECK PT.	OUTPUT	CHECK PT.	OUTPUT	
00							
1							
2	S'G	$-560.2[\sin\theta - .8215]$		-24.946			
3		$+500\,\epsilon_{LIM}/\sin^2\theta$		-0.25			
4		$+\{560.2[\sin\theta - 0.8215]\}^2/100$		+6.223			
5	S	$560.2[\sin\theta - 0.8215]$		+24.946			
6	S	$-100\sin^2\theta$		-75.00			
7	S	$100\sin^2\theta$		+75.00			
8	S'G	$-500\,\epsilon_{LIM}$		+0.19			
9							
10							
1							
2		$-500\frac{\sin\alpha}{\sin^2\theta}[\cot\alpha - 2\cot\theta]_{LIM}$		+0.16			EQUIVALENT TO $-500\dot{y}$
3	S	$-500\,\epsilon_{LIM}/\sin^2\theta$		+0.25			
4		FUNCTION GENERATION $100\sin\bar{y}_1$		-0.25			
5	S	$\bar{y}_1$ FUNCTION GENERATION		+45.00			
6	S	$\bar{y}_2$ FUNCTION GENERATION		-0.00			
7	S'G	$\bar{y}_1$ FUNCTION GENERATION		-45.00			
8	S'G	$\bar{y}_2$ FUNCTION GENERATION		+0.00			
9							

ELECTRONIC ASSOCIATES INC.
EDUCATION & TRAINING GROUP

231 R AMPLIFIER ASSIGNMENT SHEET

C MACHINE

PROBLEM 4700 PROJECT

DATE 8/9/62

AMP NO.	FB	FUNCTION, AND / OR VARIABLE	STATIC CHECK				NOTES
			CALCULATED		MEASURED		
			CHECK PT.	OUTPUT	CHECK PT.	OUTPUT	
20							
1							
2		FUNCTION GENERATION $100 \sin \bar{y}_2$		+0.01			
3		$-100 \sin \bar{y}_1$		-100.00			
4		$-100 \sin \bar{y}_2$		+0.00			
5	S	$+100 \sin \bar{y}_1$		+100.00			
6	S	$+100\, d(\cos y)/dy$		-100.00			
7							
8							
9							
30							
1							
2							
3							
4							
5							
6							
7							
8							
9							

The following static check is for the basic system without modulation terms.

A. Defined Quantities

a) $\theta = 60.0^\circ$, $\sin\theta = 0.86603$, $\cos\theta = 0.5000$
$\sin^2\theta = 0.7500$, $\cot\theta = 0.5774$

b) $\alpha = 40^\circ 54'$ (40.9°), $\sin\alpha = 0.65474$
$\cos\alpha = 0.75585$, $\cot\alpha = 1.15442$

c) $r = 7125.0$ Km

which defines $y = r/\sin^2\theta = 7125/.7500 = 9500$ Km.

d) $e_1 = 0.034$, a constant.

B. Equation 1 Evaluation

$$\frac{dr}{ds} = \cos\alpha = 0.7558$$

C. Equation 2 Evaluation

$$\frac{d\theta}{ds} = \frac{1}{r}\sin\alpha = \frac{0.65474}{7125} = 9.1093 \cdot 10^{-5}$$

APPENDIX V

D. Equation 3 Evaluation

1) $F(r) = e^{-4.18\left(\frac{r}{a} - 1.05\right)}$

$a = 6270$ KM

$F(r) = e^{-4.18\left(\frac{7125}{6270} - 1.05\right)} = e^{-4.18(1.1185 - 1.05)}$

$F(r) = e^{-4.18(.0685)} = e^{-.28633}$

$F(r) = 0.7510$

2) $\frac{dF(r)}{dr} = -\left(\frac{4.18}{a}\right) F(r) = -\frac{(4.18)(0.7510)}{6370} = -4.9281 \cdot 10^{-}$

3) $\mu = 1 - e_1 \sin\theta \, F(r)$

$\mu = 1 - (0.034)(0.86603)(0.7510)$

$\mu = 1 - 0.0221 = 0.9779$

4) $\frac{\partial\mu}{\partial r} = - e_1 \sin\theta \, \frac{dF(r)}{dr}$

$\frac{\partial\mu}{\partial r} = -(0.034)(0.86603)(-4.9281 \cdot 10^{-4})$

$\frac{\partial\mu}{\partial r} = + 1.4511 \cdot 10^{-5}$

5) $\frac{\partial\mu}{\partial\theta} = - e_1 \cos\theta \, F(r)$

$\frac{\partial\mu}{\partial\theta} = -(0.034)(0.5000)(0.7510) = -1.2767 \cdot 10^{-2}$

6) $$\frac{1}{\mu}\frac{\partial \mu}{\partial r}\sin\alpha = \left(\frac{1}{0.9779}\right)\left(1.4511\cdot 10^{-5}\right)\left(0.65474\right)$$

$$= +9.7156\cdot 10^{-6}$$

7) $$\frac{1}{\mu r}\frac{\partial \mu}{\partial \theta}\cos\alpha = -\left(\frac{1}{0.9779}\right)\left(\frac{1.2767\cdot 10^{-2}}{7125.0}\right)\left(0.75585\right)$$

$$= -1.3850\cdot 10^{-6}$$

8) $$\frac{d\alpha}{ds} = -\frac{1}{\mu}\frac{\partial \mu}{\partial r}\sin\alpha + \frac{1}{\mu r}\frac{\partial \mu}{\partial \theta}\cos\alpha - \frac{1}{r}\sin\alpha$$

$$\frac{d\alpha}{ds} = -9.7156\cdot 10^{-6} - 1.3850\cdot 10^{-6} - 9.1893\cdot 10^{-5}$$

$$= -\left[.97156 + 0.13850 + 9.1893\right]\cdot 10^{-5}$$

$$\frac{d\alpha}{ds} = -10.30\cdot 10^{-5}$$

II. With Modulation

A. Defined Quantities ($\theta, \alpha, r, y, e_1$ as before)

a) $C(y) = 0.2000$

b) $dC(y)/dy = 1.0000$

c) $m_M = 0.4412$, $r_{c_1} = 6870$ km. , $r_{c_2} = 7370$ km.

B. Equations (1) and (2) remain the same.

C. Equation (3) evaluation

1) $m(r) = \frac{m_M}{\Delta r_c}(r - r_{c_1}) = \frac{(0.4412)}{(500)}(7125-6870)$

$= 8.824 \cdot 10^{-4}(255) = 0.2250$

2) $\mu^* = 1 - e_1 \sin\theta F(r) - e_1 \sin\theta F(r) m(r) C(y)$

$1 + m(r)C(y) = 1 + (.2250)(.2000) = 1.0450$

$\mu^* = 1 - (.034)(.86603)(.7510)(1.0450)$

$\mu^* = 1 - .02311 = 0.9769$

3) Terms of $\frac{\partial \mu}{\partial r}$

(a) $-e_1 \sin\theta \frac{dF(r)}{dr} = +1.4511 \cdot 10^{-5}$

(b) $-e_1 \sin\theta \cdot \frac{dF(r)}{dr} \cdot m(r) \cdot C(y) = +(1.4511 \cdot 10^{-5})(.2250)(.200)$

$= +6.530 \cdot 10^{-7}$

3) (c) $-e_1 \sin\theta \, F(r) \cdot \frac{dm(r)}{dr} \cdot C(y)$

$$\frac{dm(r)}{dr} = \frac{m_M}{\Delta r_c} = \left(\frac{.4412}{500}\right) = 8.824 \cdot 10^{-4}$$

$$= -(0.0321)(8.824 \cdot 10^{-4})(0.20) = -3.900 \cdot 10^{-6}$$

(d) $$-\frac{e_1 F(r) m(r)}{\sin\theta} \cdot \frac{\partial C(y)}{\partial y} = \frac{-(.034)(.7510)(.2250)(1.0)}{(.86603)}$$

$$= -6.6338 \cdot 10^{-3}$$

e) Summation of 1st 3 terms

$$-e_1 \sin\theta \left[\frac{dF(r)}{dr}(1 + m(r)C(y)) + F(r)C(y)\frac{dm(r)}{dr} \right]$$

$$= +1.4511 \cdot 10^{-5} + .0653 \cdot 10^{-5} - 0.3900 \cdot 10^{-5}$$

$$= +1.1264 \cdot 10^{-5}$$

f) Total $\frac{\partial \mu}{\partial r}$:

$$\frac{\partial \mu}{\partial r} = -663.38 \cdot 10^{-5} + 1.126 \cdot 10^{-5}$$

$$\frac{\partial \mu}{\partial r} = -662.25 \cdot 10^{-5} = -6.6225 \cdot 10^{-3}$$

(4) Terms of $\partial u/\partial \theta$

(a) $-e_1 \cos\theta \, F(r) = -1.2767 \cdot 10^{-2}$

(b) $-e_1 \cos\theta \, F(r) \, m(r) \, C(y) = -(1.2767 \cdot 10^{-2})(.2250)(0.200)$

$= -5.745 \cdot 10^{-4}$

(c) $+ 2 e_1 r \, F(r)(m(r)) \dfrac{\cot\theta}{\sin\theta} \cdot \dfrac{\partial C(y)}{\partial y}$

$= (2)(.034)(7125)(.7510)(.2250)\dfrac{(.5774)}{(.86603)} \cdot (1.0)$

$= 54.5833$

(d) Summation of 1st 2 terms

$-e_1 \cos\theta \, F(r) \left[1 + m(r) \, C(y)\right]$

$= -12.767 \cdot 10^{-3} - 0.5745 \cdot 10^{-2} = -1.3342 \cdot 10^{-2}$

(e) Total:

$= 5458.33 \cdot 10^{-2} - 1.334 \cdot 10^{-2}$

$= 5457 \cdot 10^{-2} = 54.57$

[redacted]

Static Check

SHEET NO. 7 OF

PROJ. NO.

5) $\frac{1}{\mu}\frac{\partial u}{\partial r}\sin\alpha = \left(\frac{1}{.9769}\right)\left(-6.6225\cdot10^{-3}\right)\left(0.65474\right)$

$= -4.4385\cdot10^{-3}$

6) $\frac{1}{\mu r}\frac{\partial u}{\partial \theta}\cos\alpha = \left(\frac{1}{.9769}\right)\left(\frac{54.57}{.7125}\right)\left(.75585\right)$

$= +5.9259\cdot10^{-3}$

7) $\frac{d\alpha}{ds} = -\frac{1}{\mu}\frac{\partial u}{\partial r}\sin\alpha + \frac{1}{\mu r}\frac{\partial u}{\partial \theta}\cos\alpha - \frac{1}{r}\sin\alpha$

$\frac{d\alpha}{ds} = +4.4385\cdot10^{-3} + 5.9259\cdot10^{-3} - .09189\cdot10^{-3}$

$= +10.2725\cdot10^{-3} = 1.02725\cdot10^{-2}$

APPENDIX VI

ELECTRONIC ASSOCIATES, INC.
PRINCETON COMPUTATION CENTER
BOX 582, PRINCETON, N. J.

BY [illegible] SUBJECT Cambridge Research SHEET NO. 1 OF
DATE [illegible]/62 PROJ. NO.

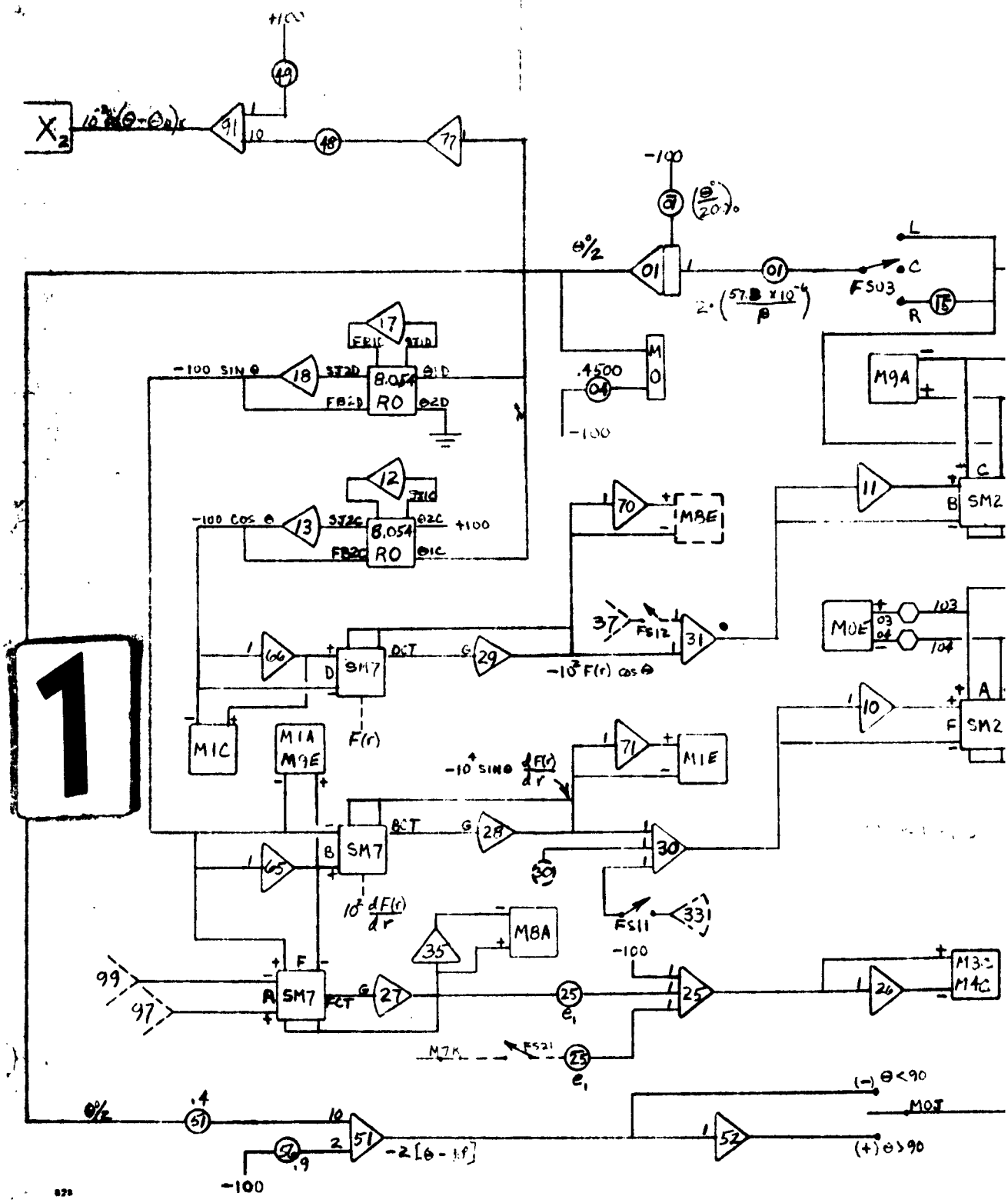

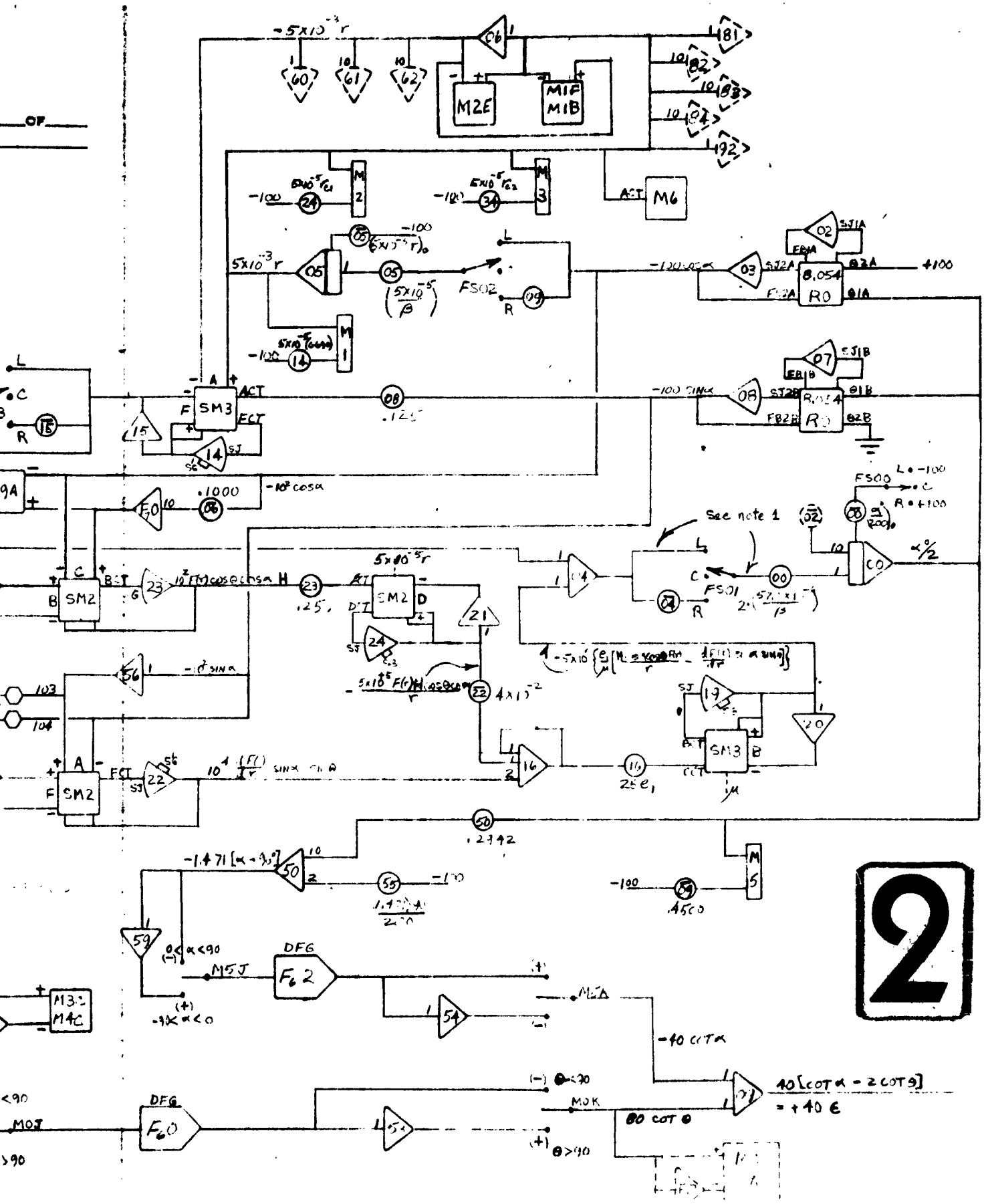

M2E
M1F
M1B
M6
M2
M3
M1
SM3
SM2
FS02
FS01
FS00
R0
8.054
See note 1
DFG
F62
F60
M5J
M5A
M0J
M0K
M3C
M4C
M5
-40 cot α
80 cot θ
40[cot α - 2 cot θ]
= +40 ε

ELECTRONIC ASSOCIATES, INC.
PRINCETON COMPUTATION CENTER
BOX 582, PRINCETON, N. J.

BY: RB
DATE: 7/24/62

SUBJECT: CAMBRIDGE RESEARCH
r, θ + α COORDINATES

SHEET NO. 2 OF
PROJ. NO.

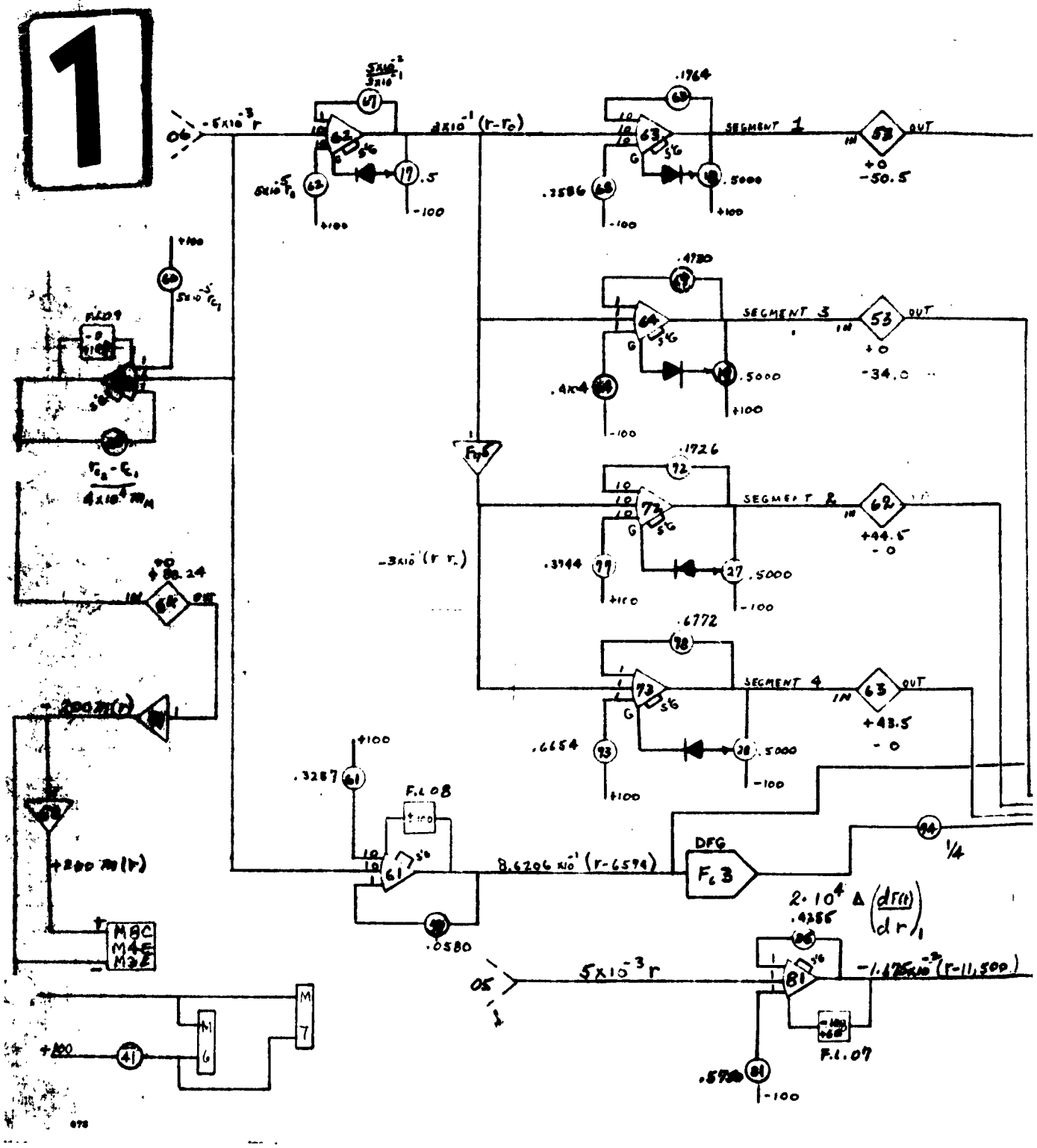

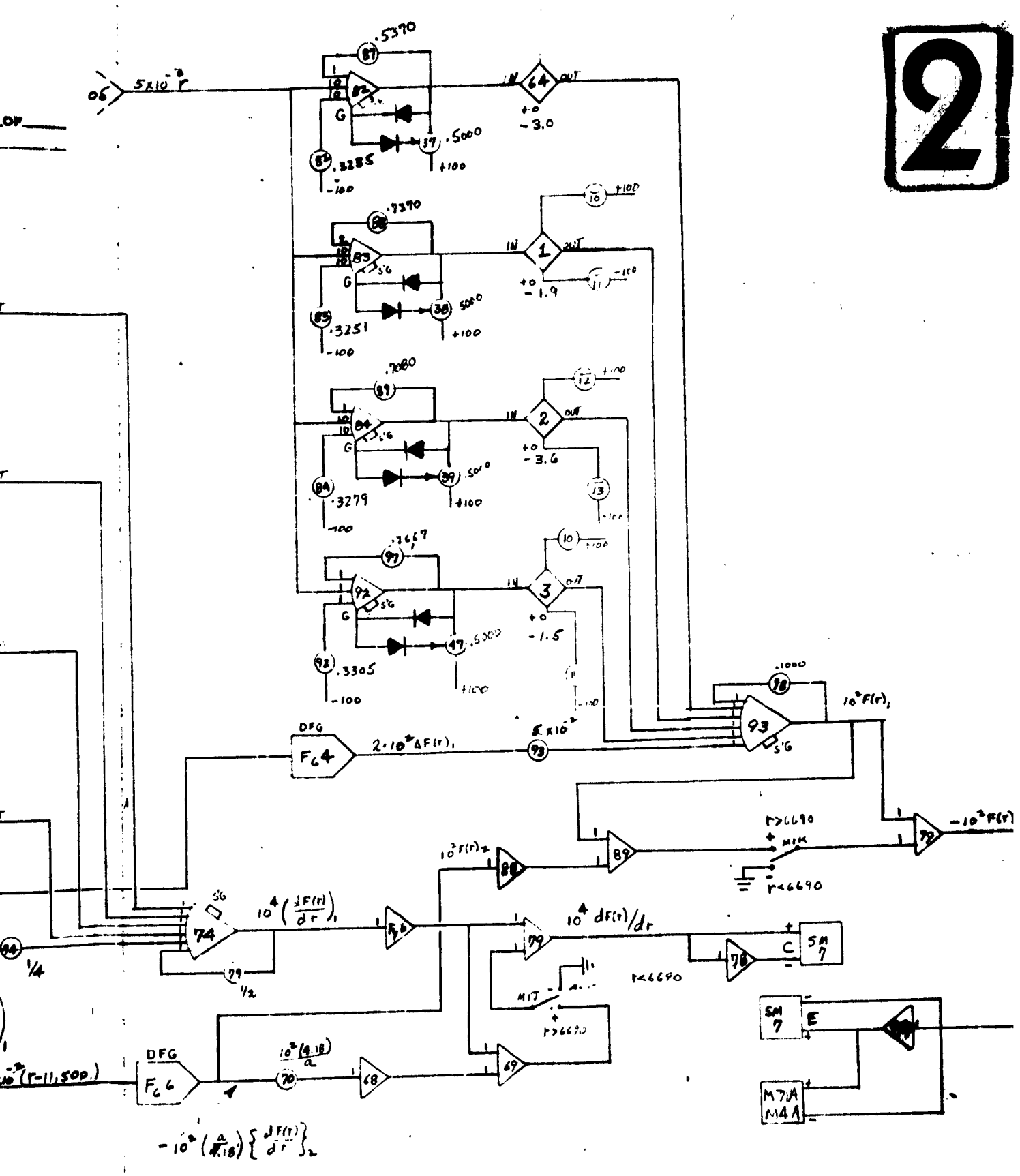
2
.5370
.5000
.3285
-100
+100
-3.0
.7370
.3251
-1.9
.7080
.3279
-3.6
.7667
.3305
-1.5
.1000
DFG
$F_6 4$
$2 \cdot 10^2 \Delta F(r)_1$
5×10^{-2}
$10^2 F(r)_1$
$-10^2 F(r)$
$10^2 F(r)_2$
$10^4 \left(\frac{dF(r)}{dr}\right)_1$
$10^4\, dF(r)/dr$
r>6690
r<6690
MIK
MIT
SM 7
M7A
M4A
DFG
$F_6 6$
$10^2 \frac{(4.18)}{a}$
$-10^2 \left(\frac{a}{4.18}\right) \left\{\frac{dF(r)}{dr}\right\}_2$
1/4
1/2

ELECTRONIC ASSOCIATES, INC.
PRINCETON COMPUTATION CENTER
BOX 582, PRINCETON, N. J.

BY PWB
DATE 8/8/62
SUBJECT Cambridge Research
SHEET NO. 3 OF
PROJ. NO.

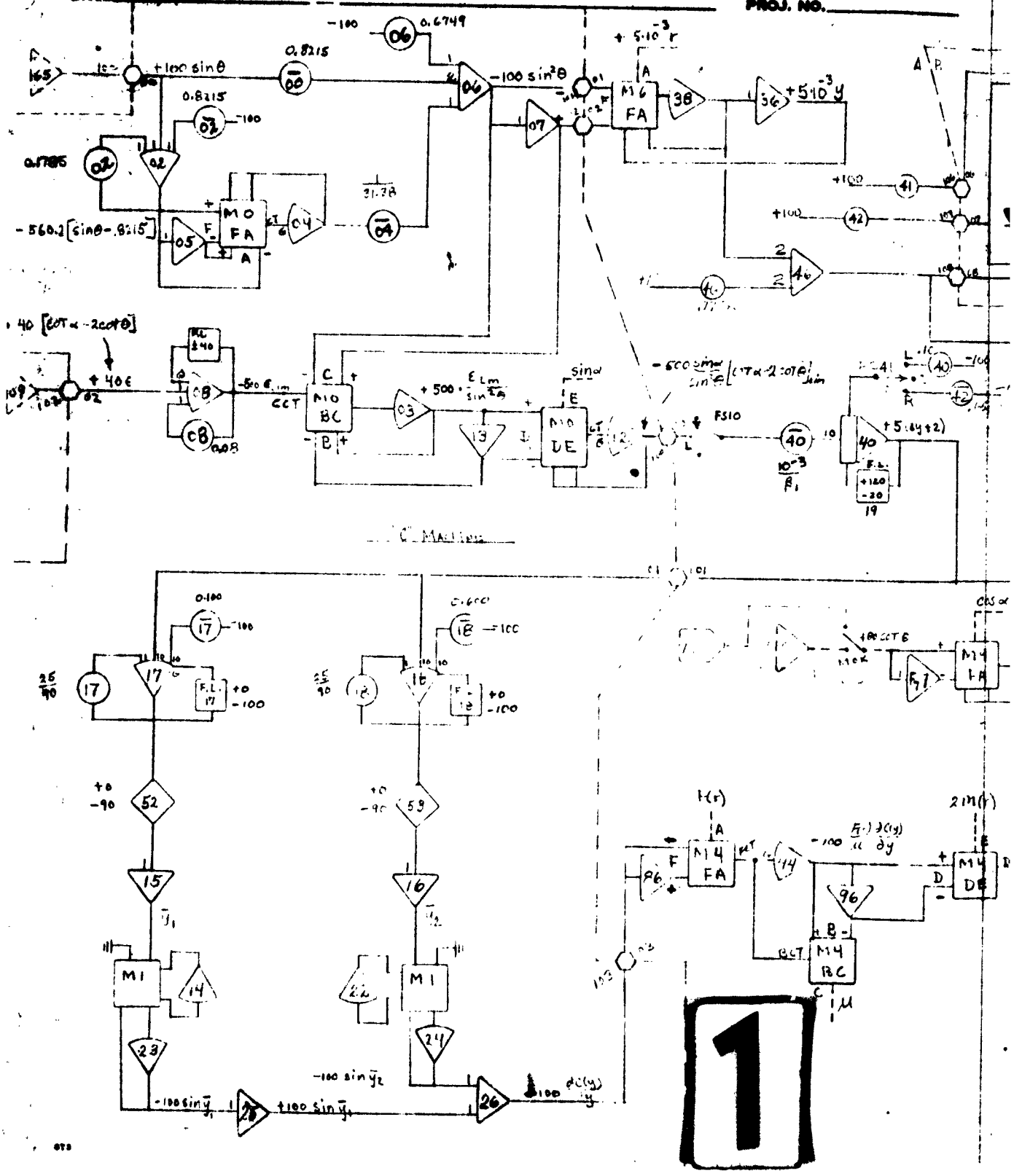

1

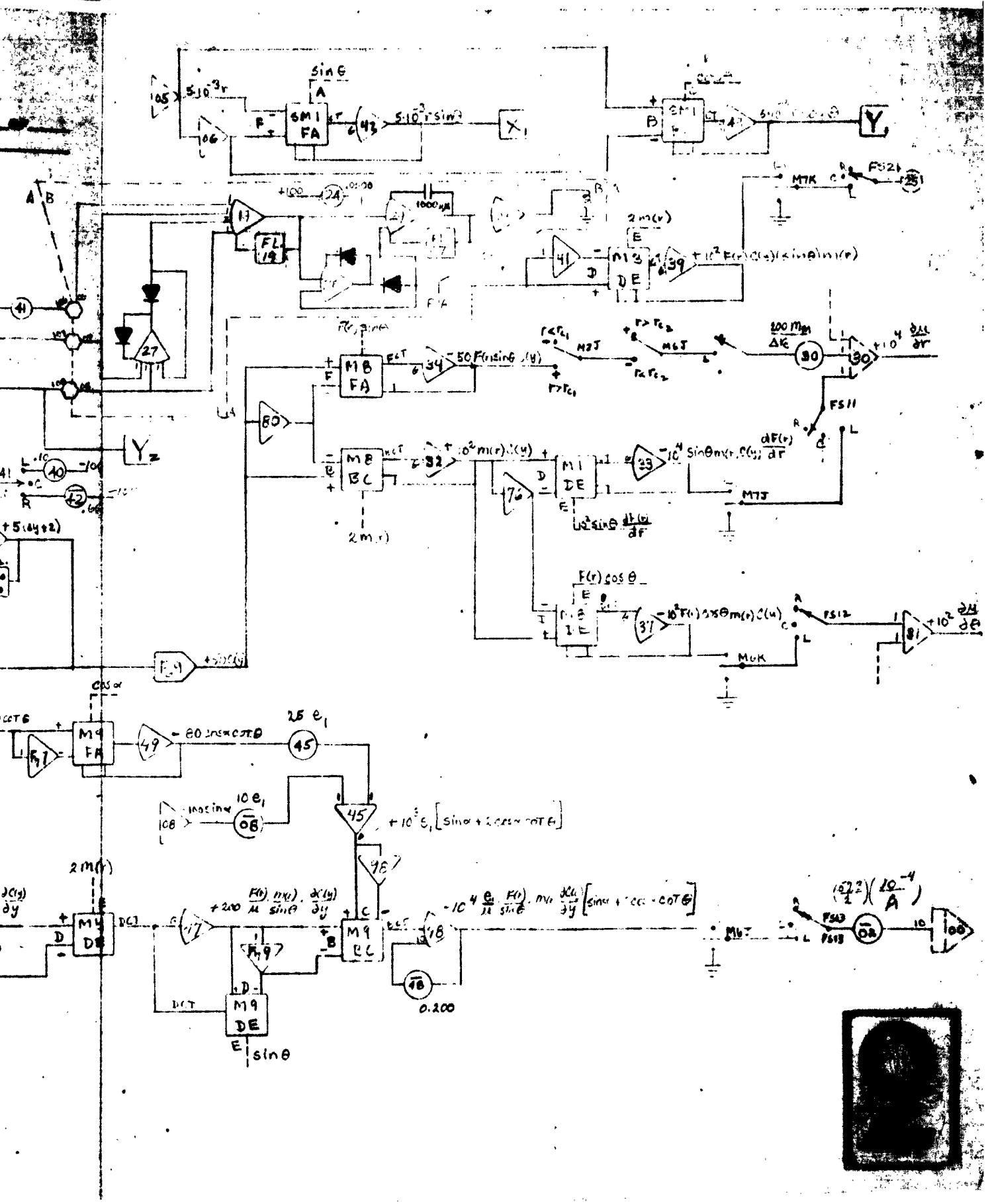

sin θ
SM1 FA
X1
Y1
M7K
FS21
FL 19
1000 μμ
2 m(r)
M3 DE
M8 FA
M8 BC
M1 DE
M7J
FS11
FS12
M6K
Yz
M9 FA
M9 BC
M9 DE
M6J
FS13
0.200
sin θ

AF Cambridge Research Laboratories, Bedford, Mass.
PROGRAMMING STUDY FOR HIGH FREQUENCY EXOSPHERIC DUCTING, by David Basson, November, 1962. 14 pp.
AFCRL-63-111 Unclassified report

This report presents specific analog computer programs effective in the solution of a two dimensional simplified description of the ray paths of radio waves propagating into the earth's exosphere. The main phenomenon examined concerns the conditions necessary for a high frequency (~14 meg.) radio wave to be trapped in a channel of enhanced ionization that is parallel to one of the earth's magnetic field lines. Complete circuit diagrams, a typical computer output plot, and detailed descriptions of special purpose circuits required to simulate the plasma channel are included within the report.

UNCLASSIFIED

1. Electrical Engineering
2. Ray Tracing With An Analog Computer

1. Basson, David

UNCLASSIFIED

AF Cambridge Research Laboratories, Bedford, Mass.
PROGRAMMING STUDY FOR HIGH FREQUENCY EXOSPHERIC DUCTING, by David Basson, November, 1962. 14 pp.
AFCRL-63-111 Unclassified report

This report presents specific analog computer programs effective in the solution of a two dimensional simplified description of the ray paths of radio waves propagating into the earth's exosphere. The main phenomenon examined concerns the conditions necessary for a high frequency (~14 meg.) radio wave to be trapped in a channel of enhanced ionization that is parallel to one of the earth's magnetic field lines. Complete circuit diagrams, a typical computer output plot, and detailed descriptions of special purpose cirucits required to simulate the plasma channel are included within the report.

UNCLASSIFIED

1. Electrical Engineering
2. Ray Tracing With An Analog Computer

1. Basson, David

UNCLASSIFIED

UNCLASSIFIED

1. Electrical Engineering
2. Ray Tracing With An Analog Computer

1. Basson, David

UNCLASSIFIED

AF Cambridge Research Laboratories, Bedford Mass.
PROGRAMMING STUDY FOR HIGH FREQUENCY EXOSPHERIC DUCTING, by David Basson, November, 1962. 14 pp.
AFCRL-63-111 Unclassified report

This report presents specific analog computer programs effective in the solution of a two dimensional simplified description of the ray paths of radio waves propagating into the earth's exosphere. The main phenomenon examined concerns the conditions necessary for a high frequency (~14 meg.) radio wave to be trapped in a channel of enhanced ionization that is parallel to one of the earth's magnetic field lines. Complete circuit diagrams, a typical computer output plot, and detailed descriptions of special purpose circuits required to simulate the plasma channel are included within the report.

UNCLASSIFIED

1. Electrical Engineering
2. Ray Tracing With An Analog Computer

1. Basson, David

UNCLASSIFIED