409 036

N-63-4-2

CATALOGED BY DDC
AS AD NO. 409036

BOEING

DDC
RECEIVED
JUN 3 1963
TISIA E

SEATTLE, WASHINGTON

Best
Available
Copy

# ACTIVE-CHANGED PAGE

| ACTIVE | | | CHANGED | | | | | ACTIVE | | | CHANGED | | | | |
|---|---|---|---|---|---|---|---|---|---|---|---|---|---|---|---|
| SECTION | PAGE | DATE | SECTION | PAGE REVISED | PAGE ADDED | PAGE DELETED | DATE | SECTION | PAGE | DATE | SECTION | PAGE REVISED | PAGE ADDED | PAGE DELETED | DATE |
| | A<br>B<br>C<br>D | 6-1-62<br>9-14-62<br>2-1-62<br>DELETED | | | | | | | | | A<br>B<br>C<br>D<br>APP I<br>APP II | A<br>B<br>D<br>(SEE ACTIVE CHANGED PAGES OF EACH SECTION | | | 6-1-62<br>6-1-62 |
| A | 1 thru 12 | ~~5-15-61~~<br>8-17-62 | | | | | | | | | | | | | |
| B | 1 thru 121 | ~~5-15-61~~<br>9-14-62 | | 10-22-62<br>(SEE PAGE B-1) | | | | | | | B<br>C<br>D<br>E<br>APP I<br>APP II | D<br>(SEE ACTIVE CHANGED PAGES OF EACH SECTION | | | 7-13-62<br>7-13-62 |
| C | 1 thru 57 | ~~5-15-61~~<br>9-14-62 | | | | | | | | | | | | | |
| APP I | 1 thru 118 | ~~5-15-61~~<br>9-14-62 | | | | | | | | | | | | | |
| APP II | 1 thru 53 | ~~5-15-61~~<br>9-14-62 | | | | | | | | | | | | | |
| D | 1 thru 37 | ~~6-1-61~~<br>8-17-62 | | A,B | ✓ | | 6-1-61 | | | | A<br>B<br>C<br>D<br>E<br>APP I<br>APP II | B<br>(SEE ACTIVE CHANGE PAGES OF EACH SECTION) | | | 8-17-62<br>8-17-62 |
| E | 1 thru 29 | ~~6-1-61~~<br>8-17-62 | | | ✓ | | 6-1-61 | | | | | | | | |
| APP I | APPENDIX I REVISED (SEE APP. II ACTIVE-CHANGED PAGE) | | | ✓ | | | 6-1-61 | | | | | | | | |
| | COMPLETE REVISION | | | | | | 8-31-61 | | | | | | | | |
| APP II | 1 thru 3 | 11-15-61 | | | ✓ | | 8-31-61 | | | | | | | | |
| | COMPLETE REVISION | | | | | | 11-15-61 | | | | | | | | |
| C | [illegible] 2, 3, 60, 103 Pages 2, 3, 5 thru 44 and 48 thru 56 | | | B ✓ | | | 1-12-62 | | | | A<br>B<br>C<br>D<br>E<br>APP I<br>APP II | B<br>D<br>(SEE ACTIVE CHANGE PAGES OF EACH SECTION | | | 9-14-2<br>9-14-2 |
| | | | A<br>B<br>C<br>D<br>E<br>APP I<br>APP II | A<br>B<br>C<br>(SEE ACTIVE CHANGED PAGES OF EACH SECTION) | | | 2-1-62<br>2-1-62 | | | | | | | | |

10-22-62

REVISED

U3 4288 1000 (WAS BAC 4131 C)

# ACTIVE-CHANGED PAGE

| ACTIVE | | | CHANGED | | | | | ACTIVE | | | CHANGED | | | | |
|---|---|---|---|---|---|---|---|---|---|---|---|---|---|---|---|
| SECTION | PAGE | DATE | SECTION | PAGE REVISED | PAGE ADDED | PAGE DELETED | DATE | SECTION | PAGE | DATE | SECTION | PAGE REVISED | PAGE ADDED | PAGE DELETED | DATE |
| | A | 6-1-62 | — | B | B.1 | | 10-22-62 | | | | | | | | |
| | B | 10-22-62 | | C | C.1 | | | | | | | | | | |
| | B.1 | 4-15-63 | | | D | | | | | | | | | | |
| | C | 10-22-62 | B | SEE ACTIVE | | | | | | | | | | | |
| | C.1 | 10-22-62 | C | | | | | | | | | | | | |
| | C.2 | 11-26-62 | D | CHANGE | | | | | | | | | | | |
| | C.3 | 1-11-63 | E | PAGES OF | | | | | | | | | | | |
| | C.4 | 4-15-63 | | | | | | | | | | | | | |
| | D | 10-22-62 | APP. I | EACH | | | | | | | | | | | |
| A | | 1-11-63 | | SECTION | | | 10-22-62 | | | | | | | | |
| B | | 1-11-63 | | B.1 | C.2 | | 11-26-62 | | | | | | | | |
| | | | | | C.3 | | | | | | | | | | |
| | | | A | SEE ACTIVE | | | | | | | | | | | |
| C | | 4-15-63 | B | | | | | | | | | | | | |
| | | | D | CHANGE PAGES | | | | | | | | | | | |
| | | | E | | | | | | | | | | | | |
| D | | 4-15-63 | APP. I | OF EACH | | | | | | | | | | | |
| | | | | SECTION | | | 11-26-62 | | | | | | | | |
| E | | 1-11-63 | | | | | | | | | | | | | |
| | | | | C.3 | | | 1-11-63 | | | | | | | | |
| APP. I | | 4-15-63 | A | SEE ACTIVE | | | | | | | | | | | |
| | | | B | CHANGE | | | | | | | | | | | |
| | | | C | PAGES | | | | | | | | | | | |
| APP. II | | 1-11-63 | D | OF EACH | | | | | | | | | | | |
| | | | E | | | | | | | | | | | | |
| | | | APP. I | | | | | | | | | | | | |
| | | | APP. II | SECTION | | | 1-11-63 | | | | | | | | |
| | | | | B.1 | C.4 | | 4-15-63 | | | | | | | | |
| | | | | SEE ACTIVE | | | | | | | | | | | |
| | | | C | CHANGE PAGE | | | | | | | | | | | |
| | | | D | OF EACH | | | | | | | | | | | |
| | | | APP. I | SECTION | | | 4-15-63 | | | | | | | | |

TO ..... DEPT. ..... MS.

REVISED 4-15-63

U3 4288 1000 (WAS BAC 4131 C)

## REVISIONS

| SECT | DESCRIPTION | PAGE | REASON |
|---|---|---|---|
| — | Added errata pages | C, C.1 | BSQAP-16-10-124/C |
| — | Changed "Substitute Figure A" to "Minuteman Requirements Control Number" | D. | Document congruity |
| B | Ground rules 2, 5, 10 & 13 were changed to comply with BSD direction | 7,8,9, 10 | BSQAP-20-7-125/C |
| | Added ground rule 14, use of trans. & handling alarm sets | 10 | BSQAP-4-18-2 |
| | Changed function B4.4 title to "Alternate Method" | 15 | BSQAP-20-7-125/C |
| | Added ref. Doc. D2-12368 for receiving inspection procedure | 23 | Doc. updating. |
| | Added check for rotation of Stage II & III in their carriages | 24 | BSQAP-29-8-144/C |
| | Revised note to include all Airborne Components in transporter | 26 | BSQAP-20-7-125/c |
| | Revised asterisk notes to delete "first" | | |
| | Deleted the requirement for use of Alarm Sets during transfer of motors to storage | 27 | BSQAP-20-7-125/C |
| | | 29 | BSQAP-4-18-2 |
| | Deleted the requirement for restraining motor carriages during single motor transfers from transporter to fixed rails | 30 | 1 |
| | Deleted reference to MGE 4187 since there are different units available now (MGE 4187, FSE 7787 & FSE 7788) | 31 | Document clarification |
| | Revised note on the functional test of Angular Accelerometers | 33 | BSQAP-20-7-125/C |
| | Added requirement for removing nozzle support prior to functional test of nozzles. | 37 | Permit nozzle check in motor storage building. |
| | These pages had "engine" to "motor" & document number corrections | 38,39, 41 | |
| | The requirement for Alarm Sets was deleted. | 42 | BSQAP-4-18-2 |
| | Changed "trailer" to "Ballistic Missile Trailer" | 42 | BSQAP-20-7-125/C |
| | Clarified requirement for restraining motor carriage during transfer of motors from fixed rails to transporters | 43,44 | 1 |
| | Alarm Set callout was deleted. Work Around callout was changed to alternate method. | 45 | BSQAP-4-18-2 BSQAP-20-7-125/C |

1 per telecon coordination with the following: Lt. Col. Carr (BSD), Ed Zack (AF Plant 77 AF Office), Rudy Riesz (Plant 77, STL), Don Malan (Boeing AFPR) & Jerry Roquet (Boeing)

## REVISIONS

| SECT | DESCRIPTION | PAGE | REASON |
|---|---|---|---|
| B | These pages were revised to up-date the document | 49,50, 52, 54, 55, 56, 57, 59, 64, 69, 71, 80, 83 | |
| | The requirement for Alarm Sets was deleted | 84 | BSQAP-4-18-2 |
| | The following pages were revised to be consistant with the changes in the text of section B | 87, 88, 89, 90, 92, 95, 96, 100, 101,102, 102a, 103a, 104,106, 111 | |
| C | | 11, 31, 33, 35, 35a,45, 50, 52, 53 | |
| D | | 7, 9,15, 15a, 16, 17, 17a, 27, 28, 29, 32, 35, 36, 37 | |
| E | These pages were revised to update the document (document corrections) | 12, 19, 20,20b, 23, 25, 26, 28 | |
| APPI | Reference MRCN forms added<br>Revised MRCN 7687 per BSD TWX BSQAP 26-7-53 and BSQAP 19-9-19<br>(Change CCP 844) | 38, 39, 45, 46, 58, 59, 96e,96f, 113,114, 115,116, 117,118 | |

## REVISIONS

| SECT | DESCRIPTION | PAGE | REASON |
|---|---|---|---|
| -- | Added errata page | C.2 | Document updating |
| A | Defined usage of illustrations | 7 | BSQAP3-12-2 |
| B | Revised ground rule 6 to delete reference to workaround procedure | 8 | |
| | Added to ground rule 9, item i | 9 | |
| | Revised ground rule 14 to indicate that the requirement to monitor temperature is still required | 10 | |
| | Added workaround document to function B13.0 | 15 | |
| | Deleted page (to be incorporated in D2-20633) | 20 | |
| | Added Nozzle Support Link Kit, (B1.1.0) Added Semitrailer Rocket Motor (FSE 101) to para. B1.1.1 | 22 | |
| | Added requirement to check carriage centering | 24 | |
| | Added requirement to monitor ambient temperature of transporting vehicle | 30 | |
| | Added a requirement for a spacer bracket to permit Stage II NCU linkage adjustments | 35 | |
| | Corrected typing error | 45 | |
| | Changed reference B10.0 to B12.0 in text, B10.1 to B12.1 in right hand column. | 53 | |
| | Changed reference B10.1 to B12.1 & added exceptions to Test Position | , 48 | |
| | Deleted para. B10.0 | 56, 57, 58 | |
| | Revised para. B12.0 to be compatible with the deletion of para. B10.0 | 62, 62a | |
| | Deleted pages 77 thru 86 (to be incorporated into D2-20633) | 77-86 | |
| B | Deleted all references to para. B10.0 and B16.0 | 87-100, 102, 102a | |
| D | Deleted reference to para. B10.0 | 24 | BSQAP-3-12-2 |
| E | Added Winch Control, Portable, to equipment required column | 20 | Document congruity |
| E | Deleted references to para. B10.0 | 21 | BSQAP-3-12-2 |
| E | Added the Portable Winch and the 1st Stage Bridle carriage to the equipment usage list | 23a | Document congruity |

U3 4287 9025 ORIG. 8/62 2-5142-2

REV SYM 11-26-62

## REVISIONS

| SECT | DESCRIPTION | PAGE | REASON |
|---|---|---|---|
| App I | Added MRCN 7793 (Spacer Bracket Stage II NCU) forms | 119, 120 | document updating |
| | Deleted MRCN 7697, Transfer Kit, Missile T-E/Rails | 53g | BSQAP-3-12-2 |
| A | Added notes to Glossary | 12 | document updating |
| B | Revised flow of Weight & Balance data forms | 23,24, 25 | document updating |
| | Deleted reference to red streamer on ordnance safety pins | 7 | |
| | Added a requirement to install Warning Tags on Safety pins | 24 | |
| | Deleted document callout | 30 | |
| | Revised installation drawing number | 32 | |
| | Added note for flow of Weight & Balance data forms | 36, 61 | |
| | Revised installation drawing number | 62a | |
| | Added equipment requirement for temperature recorder | 68 | |
| | These pages were updated to be compatible with the text | 8,51,54, 75,59,99, 100,102a 103,103a | |
| B | | | |
| C | Equipment added to recommended equipment column | 23,43 | |
| | These pages updated to be compatible with the text | 53,55,56 | |
| D | These pages updated to be compatible with the text of Section B and C | 9,11a,17, 17b,27, 34,35 | |
| E | | 15,21,20a 23,24,23a 26 | |
| APP I | | 37,53e, 53f,77, 113,115 | |
| APP II | | 35f-1 35r-4 35r-5 35r-6 35r-7 | |
| | | | 1-11-63 |

U3 4287 9025 ORIG. 8/62

2-5142-2

REV SYM 1-11-63

BOEING NO. D2-11162

SECT.

PAGE C.3

| REVISIONS | | | |
|---|---|---|---|
| SECT | DESCRIPTION | PAGE | REASON |
| C | Revised identification for ACO 480 to ACO 4368. | 23, 43<br>52 | Document Updating |
| D | Revised drawing number callout. | 14, 37 | |
| D | The following pages were revised to agree with the text of Section C. | 17, 17b<br>35 | |
| D | Referenced document number in lieu of drawing number | 16, 33 | |
| App. I | The following pages were revised to update MRCN's. | 53d,<br>53d-1,<br>53d-2,<br>53d-3,<br>53d-4,<br>53d-5,<br>53d-6,<br>70 | Document Updating |
| | 4-15-63 | | |

U3 4287 9025 ORIG. 8/62

2-5142-2

REV SYM 4-15-63

BOEING NO. D2-11162

SECT. -- PAGE C.4

## TABLE OF CONTENTS


| SECTION | |
|---|---|
| A | INTRODUCTION |
| B | MISSILE ASSEMBLY AND CHECKOUT |
| C | A/F PLANT 77 - ASSEMBLY AND CHECKOUT FSE AND ACO EQUIPMENT |
| D | A/F PLANT 77 - ASSEMBLY AND CHECKOUT EQUIPMENT MAINTENANCE |
| E | A/F PLANT 77 - MISSILE REPAIR AND REWORK |
| APPENDIX I | MINUTEMAN REQUIREMENT CONTROL NUMBER (MRCN) FORMS - FACTORY SUPPORT EQUIPMENT (FSE) |
| APPENDIX II | ASSEMBLY AND CHECKOUT EQUIPMENT REQUIREMENTS FORMS - SPECIAL FACILITIES CONTRACT/OVERHEAD EQUIPMENT (SFC/OH) |
| APPENDIX III | FACTORY SUPPORT EQUIPMENT (FSE AND AIRBORNE COMPONENT MAINTENANCE ANALYSIS |

BOEING AIRPLANE COMPANY

NUMBER D2-11162 MODEL NO. WS-133A

TITLE SECTION "A" - INTRODUCTION

PREPARED BY Plant 77 Requirements Unit

SUPERVISED BY O.A. Severide 5/16/61

APPROVED BY 5/17

Approved by (DATE) 9/11/61

5-78200-5120-68145

CHARGE NUMBER

REVISED 11-15-61 8-31-61 5-15-61

SECTION TITLE PAGE

VOL. — NO. D2-11162

SEC. A PAGE 1

BAC 4131 B

2-7000

# ACTIVE-CHANGED PAGE

| ACTIVE | | | CHANGED | | | | | ACTIVE | | | CHANGED | | | | |
|---|---|---|---|---|---|---|---|---|---|---|---|---|---|---|---|
| SECTION | PAGE | DATE | SECTION | PAGE REVISED | PAGE ADDED | PAGE DELETED | DATE | SECTION | PAGE | DATE | SECTION | PAGE REVISED | PAGE ADDED | PAGE DELETED | DATE |
| A | 1 | 11-15-61 | A | COMPLETE REVISION | | | 8-31-61 | | | | | | | | |
| | 2 | 1-11-63 | | | | | | | | | | | | | |
| | 3 | 11-15-61 | A | COMPLETE REVISION | | | 11-15-61 | | | | | | | | |
| | 4 | 11-15-61 | | | | | | | | | | | | | |
| | 5 | 8-17-62 | A | 2 | | | 2-1-62 | | | | | | | | |
| | 6 | 6-1-62 | | 5 | | | | | | | | | | | |
| | 7 | 11-26-62 | | 7 | | | | | | | | | | | |
| | 8 | 6-1-62 | | 10 | | | | | | | | | | | |
| | 9 | 11-15-61 | A | 12 | | | 2-1-62 | | | | | | | | |
| | 10 | 8-17-62 | A | 2 | | | 6-1-62 | | | | | | | | |
| | 11 | 11-15-61 | | 6 | | | | | | | | | | | |
| A | 12 | 1-11-63 | | 8 | | | | | | | | | | | |
| | | | A | 10 | | | 6-1-62 | | | | | | | | |
| | | | A | 2 | | | 8-17-62 | | | | | | | | |
| | | | | 5 | | | | | | | | | | | |
| | | | | 10 | | | | | | | | | | | |
| | | | | 12 | | | | | | | | | | | |
| | | | A | | | | 8-17-62 | | | | | | | | |
| | | | A | 2 | | | 11-26-62 | | | | | | | | |
| | | | A | 7 | | | 11-26-62 | | | | | | | | |
| | | | A | 2 | | | 1-11-63 | | | | | | | | |
| | | | A | 12 | | | 1-11-63 | | | | | | | | |

## TABLE OF CONTENTS

## SECTION "A"

## INTRODUCTION


| | Page |
|---|---|
| Title Page | 1 |
| Revision Page | 2 |
| Table of Contents | 3 |
| I Purpose and Scope | 4 |
| II Document Presentation | 4 |
| III General Ground Rules | 7 |
| Layout - Plant 77 | 10 |
| Schematic Illustration | 11 |
| Glossary | 12 |

# INTRODUCTION

## I. PURPOSE AND SCOPE

The purpose of this document is to present the technical requirements for all functions necessary to activate and maintain facilities and to assemble, checkout, and deliver SM-80 Missiles at A/F Plant 77, (an Air Force Facility located at Hill Air Force Base, Ogden, Utah) which will be activated and operated by The Boeing Company, WS-133A Assembly and Checkout Contractor.

## II. DOCUMENT PRESENTATION

1. Section A (Introduction) defines the purpose and scope of the document, overall philosophy and ground rules for A/F Plant 77 operations, and the method of document presentation.
2. Section B (Missile Assembly and Checkout) defines the functions required and the supporting technical requirements (special facilities, equipment and procedures) to receive, handle and transport, test missile components; and to assemble, checkout, deliver and store SM-80 Missiles at A/F Plant 77.
3. Section C (A/F Plant 77 Assembly and Checkout) defines the functions required and the supporting technical requirements (special facilities, equipment and procedures) to assemble and checkout A/F Plant 77 after receipt of the completed facilities (brick and mortar) in preparation for processing of SM-80 Missiles.
4. Section D (A/F Plant 77 Assembly & Checkout Equipment Maintenance) defines the functions required and supporting technical requirements (special

II. (Cont)

4. (facilities, equipment, and procedures) to service and maintain FSE and ACO Equipment used at A/F Plant 77.

5. Section E (Missile Repair and Rework at A/F Plant 77) defines the functions required and supporting technical requirements (special repair and rework at A/F Plant 77.

6. APPENDIX I - The Substitute Figure "A" forms for the Factory Support Equipment required at A/F Plant 77 will be included in Appendix I for information.

7. APPENDIX II - The Assembly and Checkout forms for special facility contract/overhead equipment and equipment used in the operational weapon system as maintenance ground equipment will be included for information.

Each section of the document is organized in the following sequence and contains:

1. Objectives and ground rules pertaining to the section.

2. List of the equipment being assembled and checked out (or maintained in case of Sections D and E).

3. Functional Flow Drawings presenting the functions to be performed based on the ground rules established. Flow drawings of sub-functions for only the complex functions are included.

4. Assembly or Checkout Function and Technical Requirement Sheets presenting the technical requirements which define what must be done and the required facilities, equipment, and procedures necessary to perform the function.

5. List of the equipment required to accomplish assembly and checkout (or maintenance in the case of Sections D and E).

Each function in each document section is identified by a decimal number

II. (CONT)

assigned in sequence from the flow drawings. Information contained on the above forms is related and tied together through use of the function numbers. The type of information contained on each form is as follows:

EQUIPMENT LISTS

Identification Number - This column lists the Figure A number for MGE. Substitute Figure A numbers are listed for Airborne, and FSE items. ACO numbers are listed for ACO items.

Equipment Nomenclature - This column lists the official nomenclature for all items (normally will be Figure A nomenclature).

Class - This column lists the classification of equipment, i.e., Airborne, MGE, FSE, or SFC/OH.

Location and Function - These columns show function number and location (e.g. CPA, MAB, etc.) where function is performed. The function number listed corresponds to the function number on both the flow drawing and the analysis sheet concerning the equipment listed. The list at the front of each document section contains the equipment on which the functions are being performed. The list at the back of each section contains the equipment required to perform the function.

FUNCTION FLOW DIAGRAMS

The Functional Flow Diagrams present (in flow diagram format) the functions necessary to accomplish the assembly and checkout (or maintenance) tasks covered by each section of this document. The

II. (CONT)

first flow diagram in each section is the master flow diagram for the task of that section. Each function on the flow diagram is identified by a decimal number located in the upper L. H. corner of each block with the top function number for each drawing also appearing in the lower R. H. corner of the drawing.

ILLUSTRATIONS

Illustrations shall be utilized for information only: details are as specified in procedure documentation.

ASSEMBLY OR CHECKOUT FUNCTION AND TECHNICAL REQUIREMENT SHEETS

These sheets provide technical analysis of the function requirements shown on the flow diagrams. These technical analysis outline test procedures and generate equipment requirements. The top function number and title for each sheet is listed at the top of that sheet. The column titled "Function Requirements" lists the function number and title followed by the technical analysis of the function requirements. The column at the right lists the equipment and/or documentation required to perform the function. All function numbers are keyed to the flow drawings.

III. GENERAL GROUND RULES

1. Completed SM-80 Missiles, less R/V, will be sold to the Air Force at A/F Plant 77 for government shipment.

   a. Boeing will load a Ballistic Missile Trailer with an SSCBM containing a missile on the railcar.

   b. The Air Force will load the SSCBM containing a missile on the C-133 Airplane.

   c. Airplane and/or railcars will be operated, maintained and supplied by the Air Force as required.

INTRODUCTION

III. (CONT)

2. All associate contractor FSE and airborne components and all MGE items (except Boeing supplied FSE and A/B components) will be received at A/F Plant 77 as GFE/GFP after completion of all required end item acceptance testing at the manufacturers' plant.

3. All Boeing supplied FSE and missile components will be received at A/F Plant 77 as CFE after completion of all required end item acceptance testing at the factory.

4. All GFE and GFP will be delivered to the A/F Plant 77 Receiving Area as part of the government shipping function.

5. The assembly and checkout requirements are based on the SM-80 Missile as defined in specification S-133-1000 and related component specifications. Tests performed at A/F Plant 77 are the minimum required to demonstrate compliance with specification requirements. R

6. Existing MGE will be utilized, whenever possible, for assembly and checkout of the Missile at A/F Plant 77. (NOTE: Off-the-shelf MGE type equipment will be provided by Facilities Procurement).

7. Functional tests of MGE and FSE, prior to installation, will be held at a minimum.

8. A/F Plant 77 stationary MGE and FSE equipment normally will be installed and tested in place.

INTRODUCTION

III. (CONT)

9. A/F Plant 77 will have the capability for removal and replacement of malfunctioned components of missiles that have not been delivered as a part of the Weapon System (i.e. missile has not been installed and delivered to the Air Force as part of a Launch Facility).

10. OOAMA (Hill AFB) will support A/F Plant 77 Cert/Cal Laboratory certification requirements. A/F Plant 77 Cert/Cal requirements shall be per Boeing documentation as agreed to by A/F Plant 77 and OOAMA.

11. A/F Plant 77 will have the capability of performing maintenance of MGE and FSE to the card (electronic) or to a comparable level. It will also have the capability of performing maintenance of MGE and FSE (mechnical/structural) to all levels.

12. Specific ground rules for an individual area will be tabulated in the appropriate document sections.

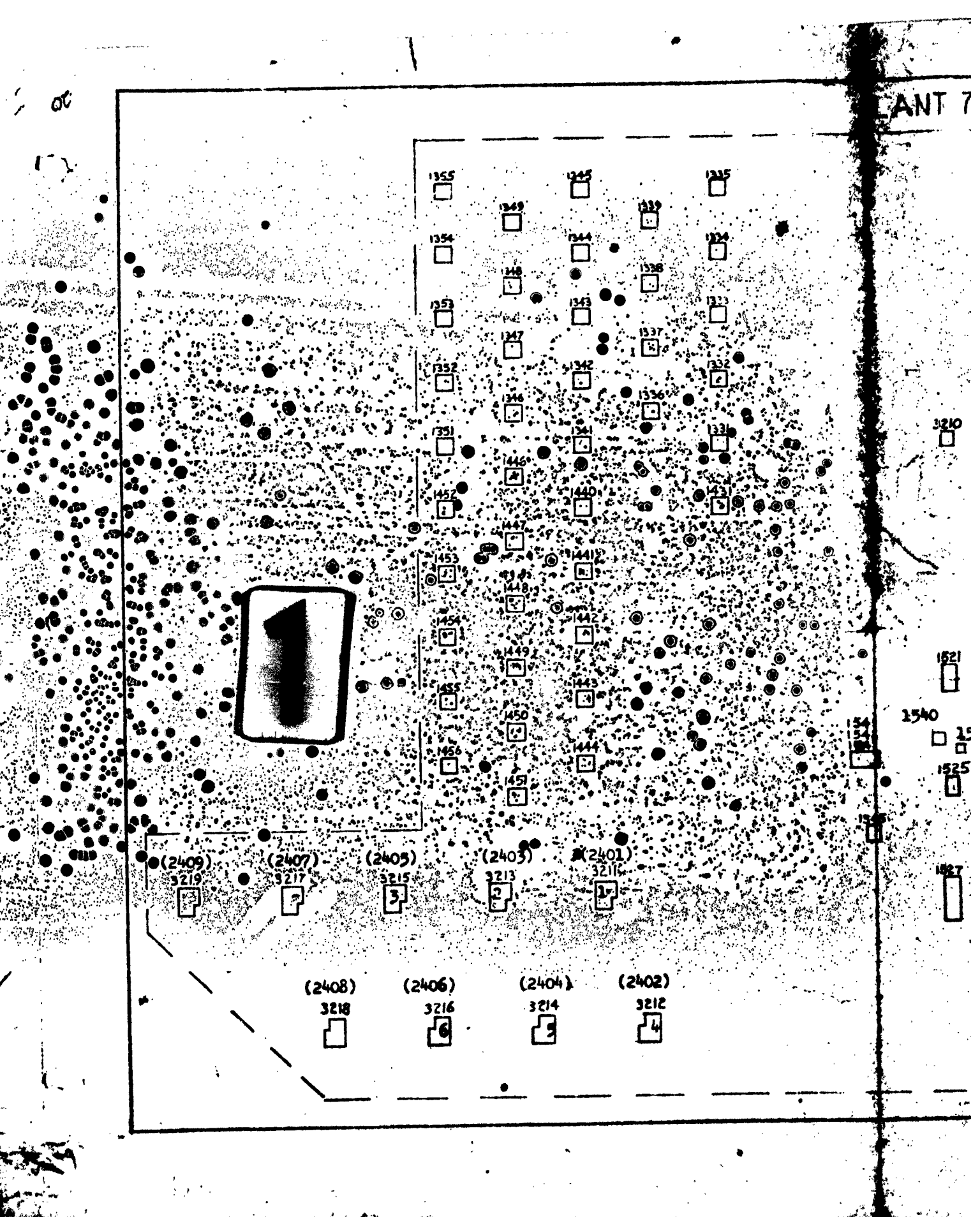
ANT 7
1355
1345
1335
1349
1339
1354
1344
1334
1348
1338
1353
1343
1333
1347
1337
1352
1342
1332
1346
1336
1351
1341
1331
1446
1452
1440
1431
1447
1453
1441
1448
1454
1442
1449
1455
1443
1450
1456
1444
1451
1521
1540
1525
1527
3210
(2409)
3219
(2407)
3217
(2405)
3215
(2403)
3213
(2401)
3211
(2408)
3218
(2406)
3216
(2404)
3214
(2402)
3212

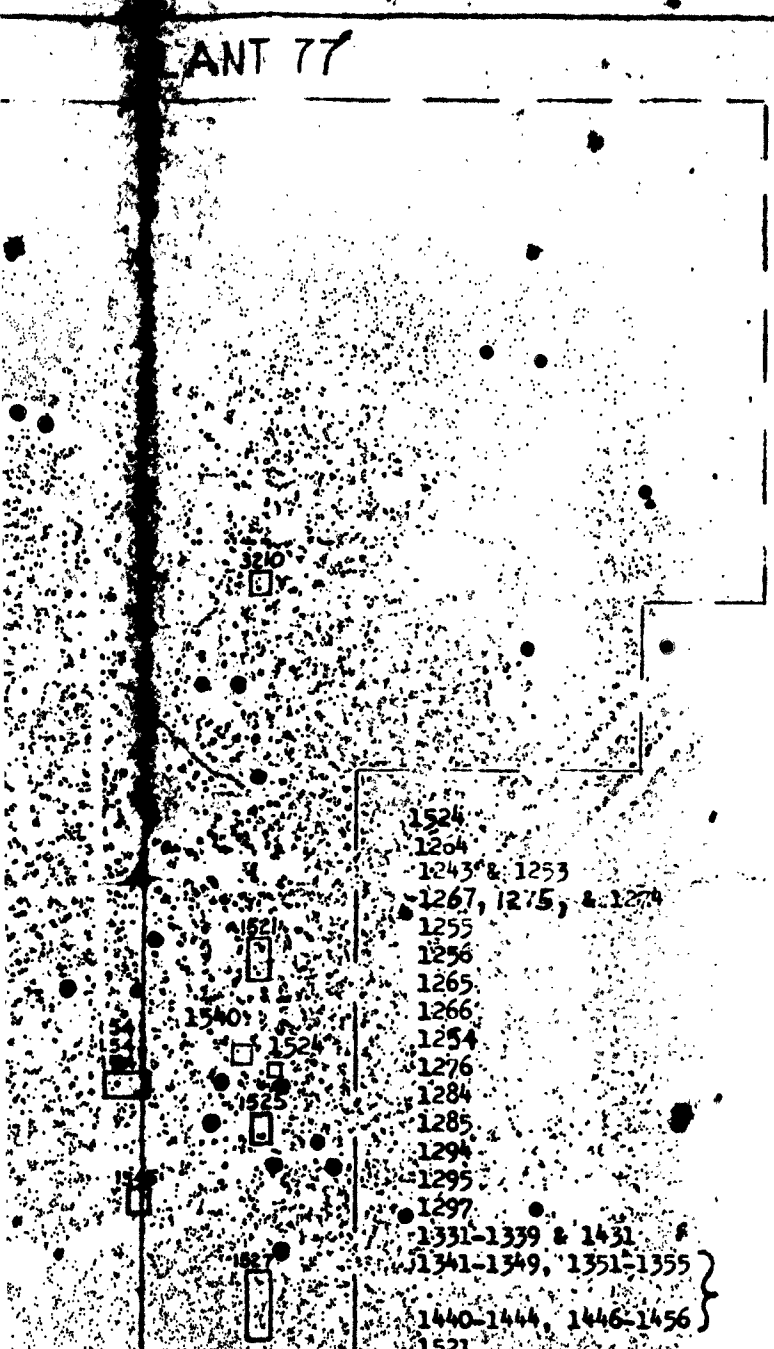


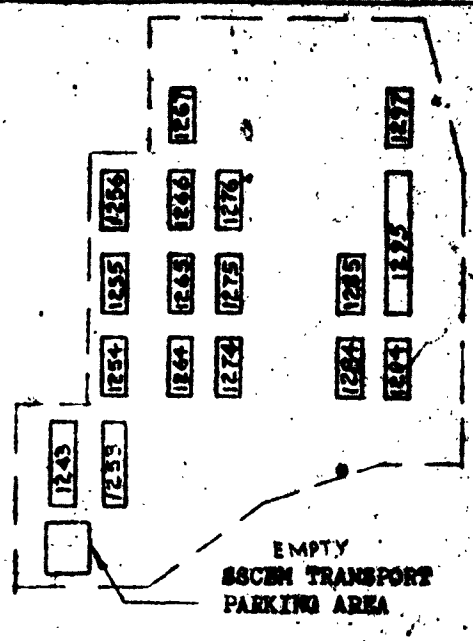


| | |
|---|---|
| 1524 | Acid Storage |
| 1264 | Training Building - GTM 77 |
| 1243 & 1253 | Maintenance & Support |
| 1267, 1275, & 1274 | Production Stores |
| 1255 | Cert/Cal Lab. & Support Shop |
| 1256 | Shipping |
| 1265 | Component Processing |
| 1266 | Receiving & Inspection |
| 1254 | Treasury Stores & MRO Stores |
| 1276 | Tool & MGE Storage |
| 1284 | AFPO & Industrial Relations |
| 1285 | Administration Support |
| 1294 | Cafeteria |
| 1295 | Administration |
| 1297 | AF District & Field Offices |
| 1331-1339 & 1431 | Missile Storage Building |
| 1341-1349, 1351-1355 / 1440-1444, 1446-1456 | Motor Storage Building |
| 1521 | Squib & Igniter Receiving & Inspection Building |
| 1541-1543, & 1545 | Squib & Ignitor Storage Building |
| 1527 | Support Building |
| 3210 | Boiler House |
| 3211-3219 | Missile Assembly Building |
| 1525 | Oil Storage & Sealant Mixing Building |
| 1540 | Men's |

PLANT 77

REVISED 8-17-62

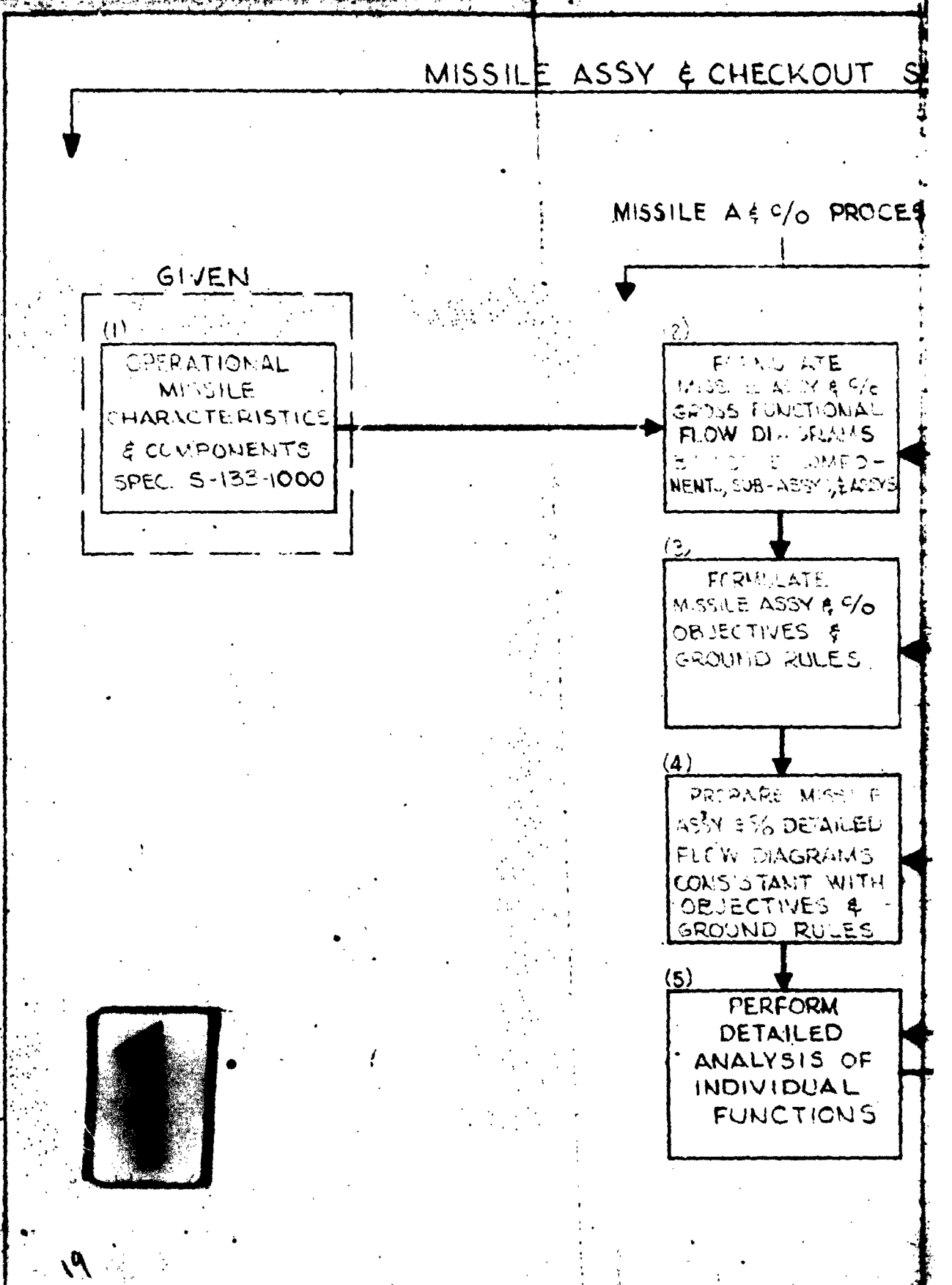
MISSILE ASSY & CHECKOUT S
MISSILE A & C/O PROCES
GIVEN
(1)
OPERATIONAL MISSILE CHARACTERISTICS & COMPONENTS SPEC. S-133-1000
(2)
FORMULATE MISSILE ASSY & C/O GROSS FUNCTIONAL FLOW DIAGRAMS
NENT., SUB-ASSY'S, & ASSYS
(3)
FORMULATE MISSILE ASSY & C/O OBJECTIVES & GROUND RULES
(4)
PREPARE MISSILE ASSY & C/O DETAILED FLOW DIAGRAMS CONSISTANT WITH OBJECTIVES & GROUND RULES
(5)
PERFORM DETAILED ANALYSIS OF INDIVIDUAL FUNCTIONS

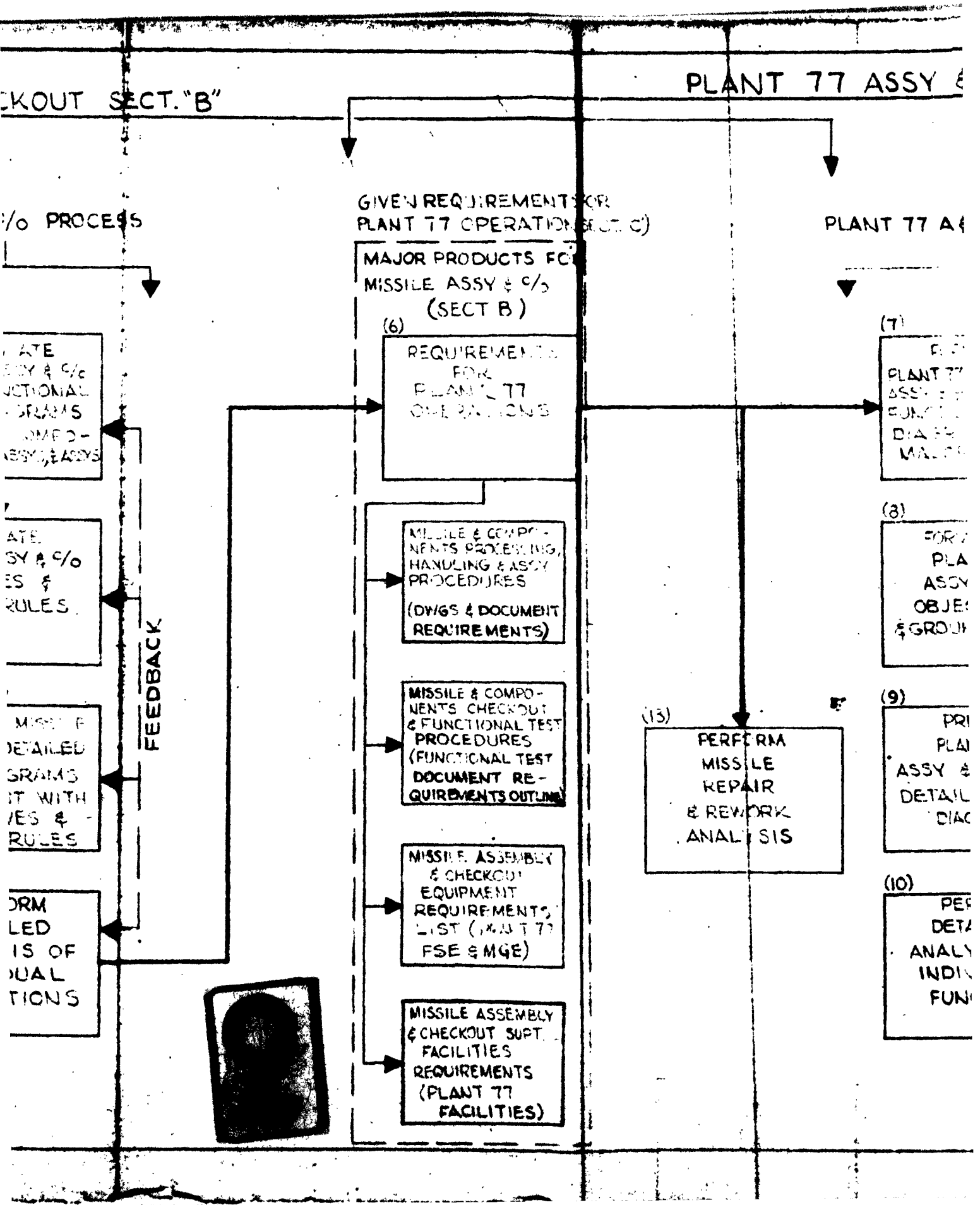

CKOUT SECT. "B"
PLANT 77 ASSY &
/o PROCESS
GIVEN REQUIREMENTS FOR PLANT 77 OPERATION (SECT. C)
PLANT 77 A
MAJOR PRODUCTS FOR MISSILE ASSY & C/O (SECT B)
(6)
REQUIREMENTS FOR PLANT 77 OPERATIONS
(7)
PLANT 77
ATE
SY & C/O
NCTIONAL
GRAMS
ASSYS, & ASSYS
ATE
SY & C/O
ES &
RULES
MISSILE & COMPONENTS PROCESSING, HANDLING & ASSY PROCEDURES (DWGS & DOCUMENT REQUIREMENTS)
(8)
PLA
ASSY
OBJE
& GROU
FEEDBACK
MISSILE & COMPONENTS CHECKOUT & FUNCTIONAL TEST PROCEDURES (FUNCTIONAL TEST DOCUMENT REQUIREMENTS OUTLINE)
(13)
PERFORM MISSILE REPAIR & REWORK ANALYSIS
(9)
PRI
PLA
ASSY &
DETAIL
DIAG
DETAILED
GRAMS
T WITH
VES &
RULES
MISSILE ASSEMBLY & CHECKOUT EQUIPMENT REQUIREMENTS LIST (PLANT 77 FSE & MGE)
(10)
PER
DETA
ANALY
INDI
FUN
ORM
LED
IS OF
UAL
TIONS
MISSILE ASSEMBLY & CHECKOUT SUPT. FACILITIES REQUIREMENTS (PLANT 77 FACILITIES)

# NT 77 ASSY & CHECK OUT SECT "C"

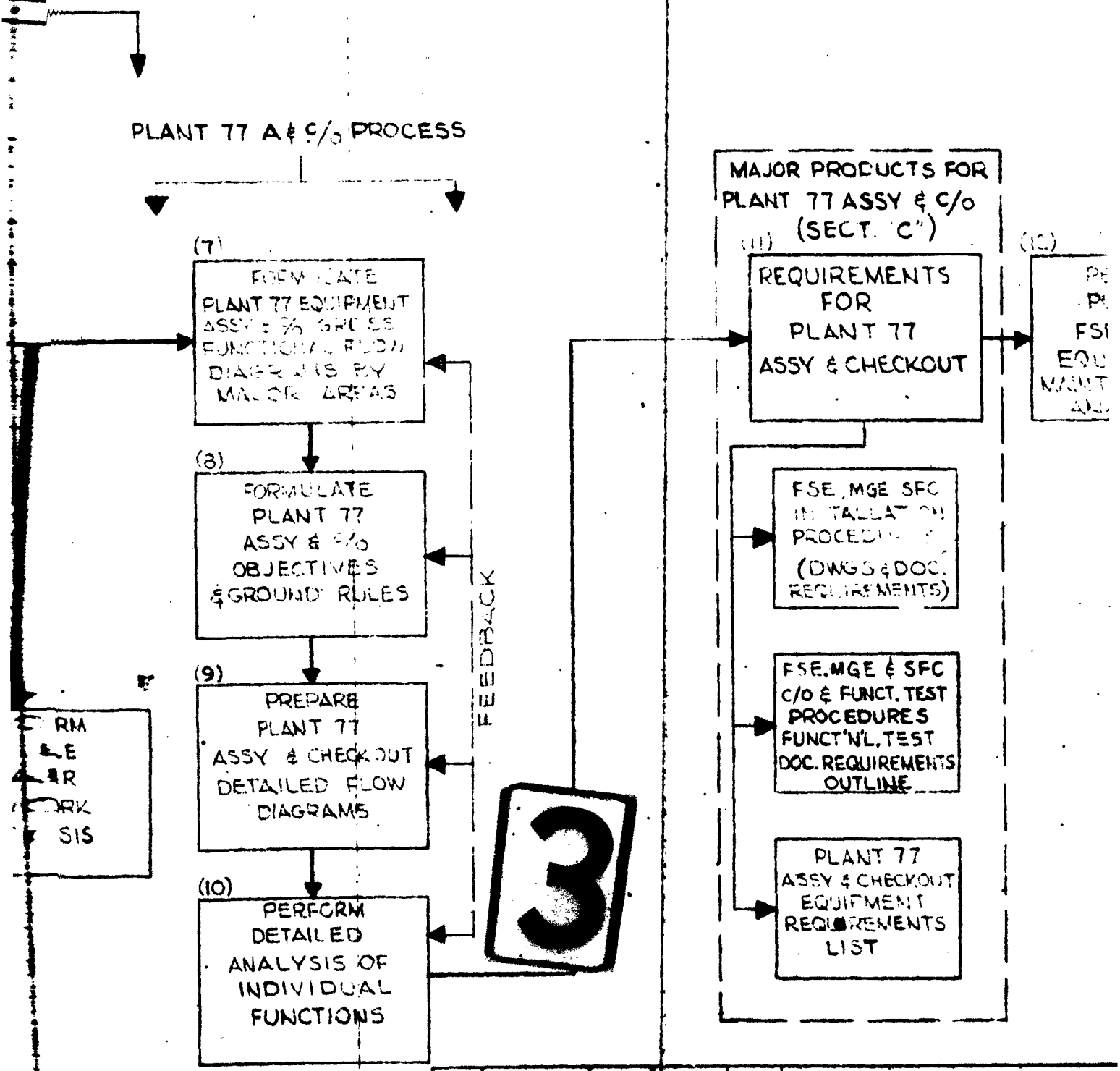


| | | | | | |
|---|---|---|---|---|---|
| CALC | | | REVISED | DATE | SCHEMATIC ILLUSTRATIO |
| CHECK | | | R. L. | 5-16-6 | PREPARATION OF A & C/O P |
| APR. | | | | 8-31-6 | MISSILE & PLANT 77 |
| APR. | | | | 11-15-6 | BOEING AIRPLANE COMPANY |
| | | | | | SEATTLE 24, WASHINGTON |

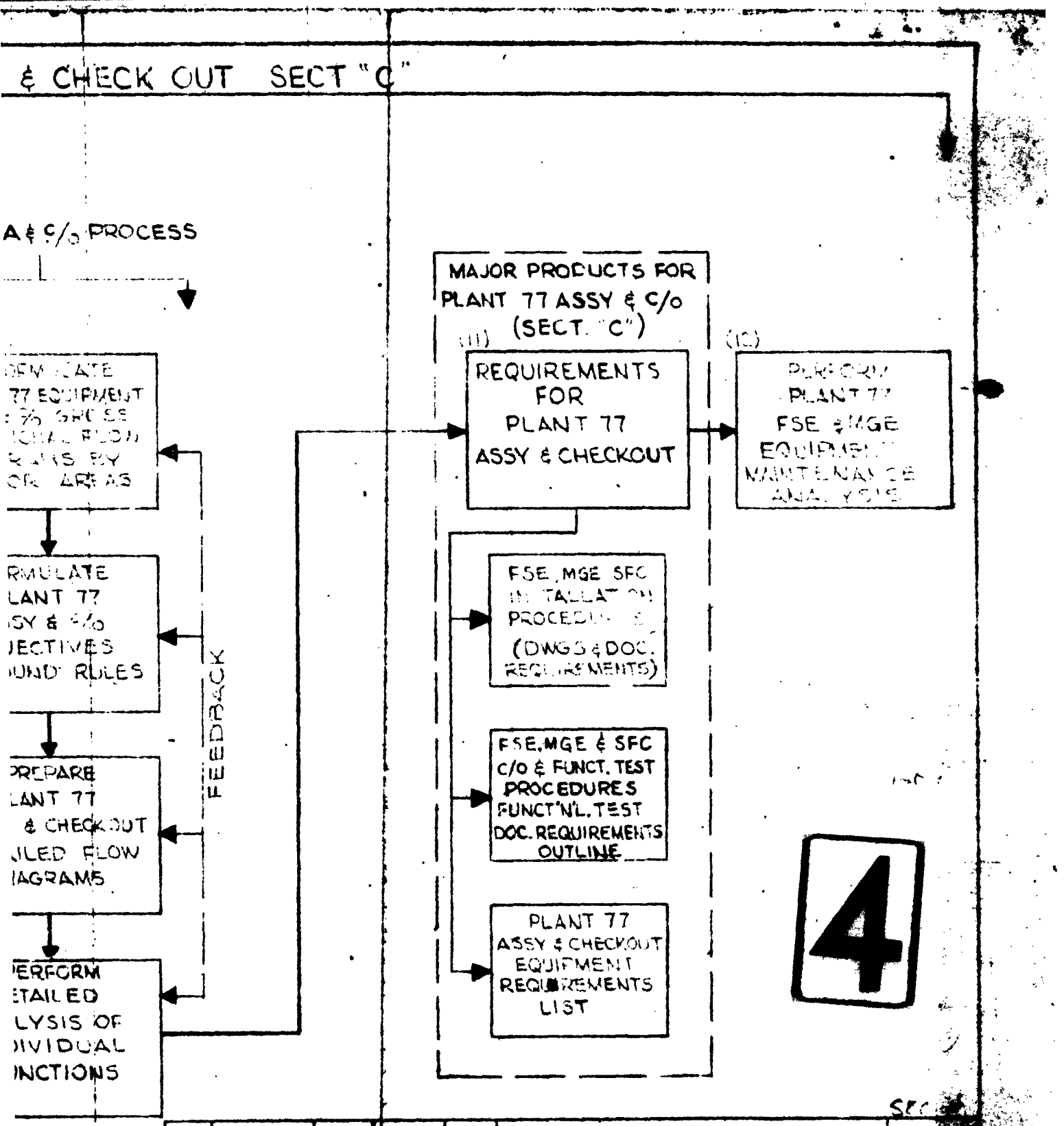
& CHECK OUT SECT "C"
A & C/O PROCESS
77 EQUIPMENT
RMULATE
LANT 77
SY & C/O
JECTIVES
UND RULES
PREPARE
LANT 77
& CHECKOUT
ILED FLOW
IAGRAMS
ERFORM
ETAILED
LYSIS OF
IVIDUAL
INCTIONS
FEEDBACK
MAJOR PRODUCTS FOR
PLANT 77 ASSY & C/O
(SECT. "C")
(11)
REQUIREMENTS
FOR
PLANT 77
ASSY & CHECKOUT
(12)
PLANT 77
FSE & MGE
EQUIPMENT
MAINTENANCE
ANALYSIS
FSE, MGE SFC
INSTALLATION
PROCEDURES
(DWGS & DOC.
REQUIREMENTS)
FSE, MGE & SFC
C/O & FUNCT. TEST
PROCEDURES
FUNCT'N'L. TEST
DOC. REQUIREMENTS
OUTLINE
PLANT 77
ASSY & CHECKOUT
EQUIPMENT
REQUIREMENTS
LIST
4
CALC
CHECK
APR.
APR.
DATE
SCHEMATIC ILLUSTRATION
PREPARATION OF A & C/O PLANS
MISSILE & PLANT 77
BOEING AIRPLANE COMPANY
SEATTLE 24, WASHINGTON
FIG.
D2-1
PAGE

## GLOSSARY

| | |
|---|---|
| A/B | Airborne |
| A/F | Air Force |
| ACO | Assembly and Checkout Equipment |
| APU | Auxiliary Power Unit |
| Cert/Cal | Certification and Calibration |
| CPA | Component Processing Area |
| F/T | Functional Test |
| FSE | Factory Support Equipment |
| G&C | Guidance and Control |
| MAB | Missile Assembly Building |
| MGE | Maintenance Ground Equipment |
| MSB | Missile Storage Building |
| NCU | Nozzle Control Unit |
| OGE | Operational Ground Equipment |
| R/V | Re-Entry Vehicle |
| R&I | Receiving and Inspection |
| RFI | Radio Frequency Interference |
| S/N | Serial Number |
| SFC/OH | Special Facilities Contract/Overhead |
| SSCBM | Shipping and Storage Container, Ballistic Missile |
| O&M | Operation and Maintenance |
| MRB | Material Review Board |
| P/N | Part Number |
| CFE | Contractor Furnished Equipment |
| GFE | Government Furnished Equipment |
| GFP | Government Furnished Property |

13

BOEING AIRPLANE COMPANY

NUMBER D2-11162 MODEL NO. WS-133A

TITLE SECTION B - Missile Assembly and Checkout

Plant 77
PREPARED BY Requirements Unit 5-15-61

SUPERVISED BY O. A. Severide 5-16-61

APPROVED BY [signature] 5/17

Approved by W. H. Charlot (DATE) 9-11-61

5-78200-5120-68145

CHARGE NUMBER

11-15-61
8-31-61
REVISED 5-15-61

SECTION TITLE PAGE

VOL. | NO. D2-11162
SEC. B | PAGE 1

BAC 4131 B

2-7000

# ACTIVE-CHANGED PAGE

| ACTIVE | | | CHANGED | | | | | ACTIVE | | | CHANGED | | | | |
|---|---|---|---|---|---|---|---|---|---|---|---|---|---|---|---|
| SECTION | PAGE | DATE | SECTION | PAGE REVISED | PAGE ADDED | PAGE DELETED | DATE | SECTION | PAGE | DATE | SECTION | PAGE REVISED | PAGE ADDED | PAGE DELETED | DATE |
| B | 1 | 11-15-61 | B | COMPLETE REVISION | | | 8-31-61 | B | 41 | 10-22-62 | B | 50 | | | 2-1-62 |
| | 2 | [illegible] | | | | | | | 42 | 10-22-62 | | 51 | | | |
| | 3 | 1-11-63 | | | | | | | 43 | 10-22-62 | | 52 | | | |
| | 3a | [illegible] | | | 96a | 7 | | | 44 | 10-22-62 | | 53 | | | |
| | 3b | 1-11-63 | | | | 77 | | | 45 | 11-26-62 | | 54 | | | |
| | 4 | 11-15-61 | | | | 115 | | | 46 | 6-1-62 | | 55 | | | |
| | 5 | 2-1-62 | | | | 119 | | | 47 | 9-19-62 | | 56 | | | |
| | 6 | 11-15-61 | B | | | | 8-31-61 | | 48 | 11-26-62 | | 57 | | | |
| | 7 | 1-11-63 | B | COMPLETE REVISION | | | 11-15-61 | | 49 | 10-22-62 | | 58 | | | |
| | 8 | 11-26-62 | | | | | | | 50 | 10-22-62 | | 59 | | | |
| | 9 | 11-26-62 | | | 7 | | | | 51 | 1-11-63 | | 61 | | | |
| | 10 | 11-26-62 | | | 77 | | | | 52 | 10-22-62 | | 62 | | | |
| | 11 | 2-1-62 | | | 115 | | | | 52a | 9-19-62 | | 64 | | | |
| | 12 | 11-15-61 | | | 119 | | | | 53 | 11-26-62 | | 65 | | | |
| | 13 | 9-19-62 | | | 120 | | | | 54 | 1-11-63 | | 66 | | | |
| | 14 | 2-1-62 | | | 121 | | | | 55 | 10-22-62 | | 67 | | | |
| | 15 | 11-26-62 | | | | | | | 56 | DELETED | | 69 | | | |
| | 16 | 11-15-61 | E | 2 | | | 1-12-62 | | 57 | DELETED | | 70 | | | |
| | 17 | | | 3 | | | | | 58 | DELETED | | 71 | | | |
| | 18 | | | 60 | | | | | 59 | 1-11-63 | | 73 | | | |
| | 19 | 11-15-61 | B | 103 | | | 1-12-62 | | 60 | 8-17-62 | | 76 | | | |
| | 20 | DELETED | B | 2 | 52a | | 2-1-62 | | 61 | 1-11-63 | | 77 | | | |
| | 21 | 11-15-61 | | 3 | | | | | 62 | 11-26-62 | | 79 | | | |
| | 22 | 11-26-62 | | 5 | | | | | 62a | 1-11-63 | | 80 | | | |
| | 23 | 1-11-63 | | 10 | | | | | 63 | 9-19-62 | | 82 | | | |
| | 24 | 1-11-63 | | 14 | | | | | 64 | 10-22-62 | | 85 | | | |
| | 25 | 1-11-63 | | 15 | | | | | 65 | 6-1-62 | | 86 | | | |
| | 26 | 10-22-62 | | 24 | | | | | 66 | 8-17-62 | | 89 | | | |
| | 27 | 10-22-62 | | 27 | | | | | 67 | 8-17-62 | | 90 | | | |
| | 28 | 8-17-62 | | 28 | | | | | 68 | 1-11-63 | | 91 | | | |
| | 28a | 1-11-63 | | 29 | | | | | 69 | 10-22-62 | | 92 | | | |
| | 29 | 10-22-62 | | 30 | | | | | 70 | 2-1-62 | | 93 | | | |
| | 30 | 1-11-63 | | 31 | | | | | 71 | 10-22-62 | | 94 | | | |
| | 31 | 10-22-62 | | 32 | | | | | 72 | 9-19-62 | | 95 | | | |
| | 32 | 1-11-63 | | 33 | | | | | 73 | 6-1-62 | | 96 | | | |
| | 33 | 10-22-62 | | 34 | | | | | 74 | 6-1-62 | | 97 | | | |
| | 34 | 6-1-62 | | 36 | | | | | 75 | 1-11-63 | | 98 | | | |
| | 35 | 11-26-62 | | 37 | | | | | 76 | 2-1-62 | | 99 | | | |
| | 36 | 1-11-63 | | 38 | | | | | 77 | DELETED | | 100 | | | |
| | 37 | 10-22-62 | | 39 | | | | | 78 | DELETED | | 101 | | | |
| | 38 | 10-22-62 | | 40 | | | | | 79 | DELETED | | 102 | | | |
| | 39 | 10-22-62 | | 41 | | | | | 80 | DELETED | | 103 | | | |
| B | 40 | 6-1-62 | B | 49 | | | 2-1-62 | B | | | B | 104 | | | 2-1-62 |

1-11-63

REVISED

U3 4288 1000 (WAS BAC 4131 C)

# ACTIVE-CHANGED PAGE

| ACTIVE | | | CHANGED | | | | | ACTIVE | | | CHANGED | | | | |
|---|---|---|---|---|---|---|---|---|---|---|---|---|---|---|---|
| SECTION | PAGE | DATE | SECTION | PAGE REVISED | PAGE ADDED | PAGE DELETED | DATE | SECTION | PAGE | DATE | SECTION | PAGE REVISED | PAGE ADDED | PAGE DELETED | DATE |
| B | 81 | DELETED | B | 115 | | | 2-1-62 | B | 120 | 2-1-62 | B | 59 | | | 6-1-62 |
| | 82 | | | 116 | | | | B | 121 | 6-1-62 | | 60 | | | |
| | 83 | | | 118 | | | | | | | | 61 | | | |
| | 84 | | | 119 | | | | | | | | 62 | | | |
| | 85 | | | 120 | | | | | | | | 63 | | | |
| | 86 | DELETED | B | 121 | | | 2-1-62 | | | | | 64 | | | |
| | 87 | 11-26-62 | B | 2 | 102a | | 6-1-62 | | | | | 65 | | | |
| | 88 | 11-26-62 | | 3 | | | | | | | | 66 | | | |
| | 89 | 11-26-62 | | 8 | | | | | | | | 67 | | | |
| | 90 | 11-26-62 | | 9 | | | | | | | | 68 | | | |
| | 91 | 11-26-62 | | 10 | | | | | | | | 69 | | | |
| | 92 | 11-26-62 | | 13 | | | | | | | | 71 | | | |
| | 93 | 11-26-62 | | 22 | | | | | | | | 72 | | | |
| | 94 | 11-26-62 | | 23 | | | | | | | | 73 | | | |
| | 95 | 11-26-62 | | 24 | | | | | | | | 74 | | | |
| | 96 | 11-26-62 | | 25 | | | | | | | | 75 | | | |
| | 97 | 11-26-62 | | 26 | | | | | | | | 77 | | | |
| | 98 | 11-26-62 | | 27 | | | | | | | | 78 | | | |
| | 99 | 1-11-63 | | 28 | | | | | | | | 80 | | | |
| | 100 | 1-11-63 | | 29 | | | | | | | | 81 | | | |
| | 101 | 10-22-62 | | 30 | | | | | | | | 82 | | | |
| | 102 | 11-26-62 | | 31 | | | | | | | | 84 | | | |
| | 102a | 1-11-63 | | 32 | | | | | | | | 86 | | | |
| | 103 | 1-11-63 | | 34 | | | | | | | | 87 | | | |
| | 103a | 1-11-63 | | 35 | | | | | | | | 88 | | | |
| | 104 | 10-22-62 | | 36 | | | | | | | | 89 | | | |
| | 105 | 11-15-61 | | 37 | | | | | | | | 92 | | | |
| | 106 | 10-22-62 | | 39 | | | | | | | | 94 | | | |
| | 107 | 6-1-62 | | 39 | | | | | | | | 95 | | | |
| | 108 | | | 40 | | | | | | | | 96 | | | |
| | 109 | 6-1-62 | | 41 | | | | | | | | 97 | | | |
| | 110 | 11-15-61 | | 42 | | | | | | | | 98 | | | |
| | 111 | 10-22-62 | | 43 | | | | | | | | 99 | | | |
| | 112 | 2-1-62 | | 44 | | | | | | | | 100 | | | |
| | 113 | 6-1-62 | | 45 | | | | | | | | 101 | | | |
| | 114 | 2-1-62 | | 46 | | | | | | | | 102 | | | |
| | 115 | 2-1-62 | | 47 | | | | | | | | 103 | | | |
| | 116 | 2-1-62 | | 48 | | | | | | | | 104 | | | |
| | 117 | 11-15-62 | | 49 | | | | | | | | 106 | | | |
| B | 118 | 2-1-62 | | 50 | | | | | | | | 107 | | | |
| | | | | 51 | | | | | | | | 108 | | | |
| | | | | 52 | | | | | | | | 109 | | | |
| | | | | 52a | | | | | | | | 113 | | | |
| | | | | 53 | | | | | | | | | | | |
| B | 119 | 2-1-62 | | 55 | | | | | | | B | 121 | | | 6-1-62 |
| | | | B | 56 | | | 6-1-62 | | | | | | | | |

REVISED

BAC 4131 C

# ACTIVE-CHANGED PAGE

| ACTIVE | | | CHANGED | | | | | ACTIVE | | | CHANGED | | | | |
|---|---|---|---|---|---|---|---|---|---|---|---|---|---|---|---|
| SECTION | PAGE | DATE | SECTION | PAGE REVISED | PAGE ADDED | PAGE DELETED | DATE | SECTION | PAGE | DATE | SECTION | PAGE REVISED | PAGE ADDED | PAGE DELETED | DATE |
| | | | B | 2 | 3a | | 7-13-62 | | | | B | 69 | | | 8-17-62 |
| | | | | 3 | | | | | | | | 80 | | | |
| | | | | 47 | | | | | | | | 84 | | | |
| | | | | 52a | | | | | | | | 87 | | | |
| | | | | 62 | | | | | | | | 88 | | | |
| | | | | 81 | | | | | | | | 89 | | | |
| | | | | 94 | | | | | | | | 90 | | | |
| | | | | 95 | | | | | | | | 91 | | | |
| | | | | 101 | | | | | | | | 92 | | | |
| | | | | 102 | | | | | | | | 93 | | | |
| | | | | 102a | | | | | | | | 94 | | | |
| | | | B | 103 | | | 7-13-62 | | | | | 95 | | | |
| | | | B | 2 | | | 8-17-62 | | | | | 96 | | | |
| | | | | 3 | | | | | | | | 97 | | | |
| | | | | 3a | | | | | | | | 98 | | | |
| | | | | 24 | | | | | | | | 99 | | | |
| | | | | 28 | | | | | | | | 100 | | | |
| | | | | 29 | 28a | | | | | | | 101 | | | |
| | | | | 30 | | | | | | | | 103 | | | |
| | | | | 31 | | | | | | | | 111 | | | |
| | | | | 32 | | | | | | | B | | | | 8-17-62 |
| | | | | 35 | | | | | | | B | 2 | | | 9-14-62 |
| | | | | 41 | | | | | | | | 3 | | | |
| | | | | 42 | | | | | | | | 3a | | | |
| | | | | 43 | | | | | | | | 13 | | | |
| | | | | 44 | | | | | | | | 23 | | | |
| | | | | 45 | | | | | | | | 28 | | | |
| | | | | 48 | | | | | | | | 29 | | | |
| | | | | 49 | | | | | | | | 32 | | | |
| | | | | 50 | | | | | | | | 42 | | | |
| | | | | 51 | | | | | | | | 44 | | | |
| | | | | 59 | | | | | | | | 47 | | | |
| | | | | 60 | | | | | | | | 56 | | | |
| | | | | 63 | | | | | | | | 62 | | | |
| | | | | 64 | | | | | | | | 68 | | | |
| | | | | 66 | | | | | | | | 71 | | | |
| | | | | | | | | | | | | 72 | | | |
| | | | | | | | | | | | | 75 | | | |
| | | | | | | | | | | | | 78 | | | |
| | | | B | 67 | | | 8-17-62 | | | | B | 81 | | | 9-14-62 |

9-14-62

REVISED _____

U3 4288 1000 (WAS BAC 4131 C)

# ACTIVE-CHANGED PAGE

| ACTIVE | | | CHANGED | | | | | ACTIVE | | | CHANGED | | | | |
|---|---|---|---|---|---|---|---|---|---|---|---|---|---|---|---|
| SECTION | PAGE | DATE | SECTION | PAGE REVISED | PAGE ADDED | PAGE DELETED | DATE | SECTION | PAGE | DATE | SECTION | PAGE REVISED | PAGE ADDED | PAGE DELETED | DATE |
| | | | B | 2 | | | 10-22-62 | | | | B | 92 | | | 10-22-62 |
| | | | | 3 | | | | | | | | 95 | | | |
| | | | | | 36 | | | | | | | 96 | | | |
| | | | | 7 | | | | | | | | 100 | | | |
| | | | | 8 | | | | | | | | 101 | | | |
| | | | | 9 | | | | | | | | 102 | | | |
| | | | | 10 | | | | | | | | 102a | | | |
| | | | | 15 | | | | | | | | [illegible] | 103a | | |
| | | | | 23 | | | | | | | | 104 | | | |
| | | | | 24 | | | | | | | | 106 | | | |
| | | | | 26 | | | | | | | | 111 | | | |
| | | | | 27 | | | | | | | | | | | |
| | | | | 29 | | | | | | | B | | | | 10-22-62 |
| | | | | 30 | | | | | | | B | 2 | | | 11-26-62 |
| | | | | 31 | | | | | | | | 3 | | | |
| | | | | 33 | | | | | | | | 36 | | | |
| | | | | 37 | | | | | | | | 8 | | | |
| | | | | 38 | | | | | | | | 9 | | | |
| | | | | 39 | | | | | | | | 10 | | | |
| | | | | 41 | | | | | | | | 15 | | 20 | |
| | | | | 42 | | | | | | | | 22 | | | |
| | | | | 43 | | | | | | | | 24 | | | |
| | | | | 44 | | | | | | | | 30 | | | |
| | | | | 45 | | | | | | | | 35 | | | |
| | | | | 49 | | | | | | | | 45 | | | |
| | | | | 50 | | | | | | | | 53 | | 56 | |
| | | | | 52 | | | | | | | | 57 | | | |
| | | | | 54 | | | | | | | | 62 | | 58 | |
| | | | | 55 | | | | | | | | 62a | | | |
| | | | | 56 | | | | | | | | 77 | | | |
| | | | | 57 | | | | | | | | 87 | | 78 | |
| | | | | 59 | | | | | | | | 88 | | 79 | |
| | | | | 64 | | | | | | | | 89 | | 80 | |
| | | | | 69 | | | | | | | | 90 | | 81 | |
| | | | | 71 | | | | | | | | 91 | | 82 | |
| | | | | 80 | | | | | | | | 92 | | 83 | |
| | | | | 83 | | | | | | | | 93 | | 84 | |
| | | | | 84 | | | | | | | | 94 | | 85 | |
| | | | | 87 | | | | | | | | 95 | | 86 | |
| | | | | 88 | | | | | | | | 96 | | | |
| | | | | 89 | | | | | | | | 97 | | | |
| | | | B | 90 | | | 10-22-62 | | | | | 98 | | | |
| | | | | | | | | | | | | 99 | | | |
| | | | | | | | | | | | | 100 | | | |
| | | | | | | | | | | | | 102 | | | |
| | | | | | | | | | | | | 102a | | | |
| | | | | | | | | | | | B | | | | 11-26-62 |

See revision description page, preceding Document Table of Contents

28

# ACTIVE-CHANGED PAGE

| ACTIVE | | | CHANGED | | | | | ACTIVE | | | CHANGED | | | | |
|---|---|---|---|---|---|---|---|---|---|---|---|---|---|---|---|
| | | | | PAGE | | | | | | | | PAGE | | | |
| SECTION | PAGE | DATE | SECTION | REVISED | ADDED | DELETED | DATE | SECTION | PAGE | DATE | SECTION | REVISED | ADDED | DELETED | DATE |
| | | | B | 2 | 3C | | 1-11-63 | | | | | | | | |
| | | | | 3 | | | | | | | | | | | |
| | | | | 7 | | | | | | | | | | | |
| | | | | 23 | | | | | | | | | | | |
| | | | | 24 | | | | | | | | | | | |
| | | | | 25 | | | | | | | | | | | |
| | | | | 30 | | | | | | | | | | | |
| | | | | 32 | | | | | | | | | | | |
| | | | | 36 | | | | | | | | | | | |
| | | | | 51 | | | | | | | | | | | |
| | | | | 54 | | | | | | | | | | | |
| | | | | 59 | | | | | | | | | | | |
| | | | | 61 | | | | | | | | | | | |
| | | | | 62a | | | | | | | | | | | |
| | | | | 68 | | | | | | | | | | | |
| | | | | 75 | | | | | | | | | | | |
| | | | | 99 | | | | | | | | | | | |
| | | | | 100 | | | | | | | | | | | |
| | | | | 102a | | | | | | | | | | | |
| | | | | 103 | | | | | | | | | | | |
| | | | | 103a | | | | | | | | | | | |
| | | | B | | | | 1-11-63 | | | | | | | | |

See Revision Description page preceeding Document Table of Contents

## TABLE OF CONTENTS

## SECTION "B"

## MISSILE ASSEMBLY AND CHECKOUT


| | Page |
|---|---|
| TITLE PAGE | 1 |
| REVISION PAGE | 2 |
| TABLE OF CONTENTS | 4 |
| LIST OF ILLUSTRATIONS | 6 |
| SCOPE | 8 |
| GROUND RULES | 8 |
| EQUIPMENT LIST - AIRBORNE COMPONENTS | 12 |
| FUNCTIONAL FLOW DRAWINGS | 16 |
| TECHNICAL FUNCTIONAL ANALYSIS | 21 |
| 1.0 Receive and Inspect, Missile Components and Delivered OGE/MGE | 21 |
| 2.0 Transport, Handle and Store - Missile Components and Delivered OGE/MGE | 26 |
| 3.0 Functional Test - Missile Components | 33 |
| 4.0 Store and Transport - Missile Components and Delivered OGE/MGE | 40 |
| 5.0 Rocket Motor Buildup | 46 |
| 6.0 Functional Test - Rocket Motor Buildup | 48 |
| 7.0 Pre-assemble Missile Less G&C Section | 50 |
| 8.0 Test, Ordnance Arm-Disarm Circuit | 53 |
| 9.0 Install G&C Section | 55 |
| 10.0 Functional Test Missile | 56 |
| 11.0 Complete Missile Assembly | 59 |
| 12.0 Perform Missile Verification Tests | 62 |

TABLE OF CONTENTS

SECTION B (CONT)


| | |
|---|---|
| 13.0 Missile Handling for Shipment | 63 |
| 14.0 Preparation for Air Force Acceptance of Missile | 75 |
| 15.0 Air Force Acceptance of Missile | 76 |
| 16.0 Missile Handling for Shipment (Work-Around) | 77 |
| Required Equipment - Assembly and Checkout Support (FSE-ACO/MGE-SFC/OH) | 87 |
| Required Document List | 100 |
| Required Drawing List | 103 |
| Illustrations | 104 |

## LIST OF ILLUSTRATIONS


| FIG. NO. | TITLE | PAGE |
|---|---|---|
| 2-B | NCU Linkage Adjustment (CPA) | 104 |
| 3-B | Raceway Cable and Battery Package Test Area (CPA) | 105 |
| 5-B | NCU Linkage Adjustment Position (CPA) | 106 |
| 6-B | Motor Buildup and Test (MAB) | 107 |
| 7-B | Missile Checkout Area (MAB) | 108 |
| 8-B | Missile Assembly and Test Position Ordnance Test (MAB) | 109 |
| 9-B | Missile Assembly and Test Position Missile Functional Test (MAB) | 110 |
| 10-B | Ordnance Component Test Area (Bldg. 1521) | 111 |
| 11-B | Motor Transfer from Storage Building into SSCBM (Transfer Area) | 112 |
| 12-B | Missile Checkout Room (MAB) | 113 |
| 13-B | Stage I Motor Transfer from Rocket Motor Truck into Storage Building (Transfer Area) | 114 |
| 14-B | Stage II Motor Transfer from Rocket Motor Truck into Storage Building (Transfer Area) | 115 |
| 15-B | Stage III Motor Transfer from Rocket Motor Truck into Storage Building (Transfer Area) | 116 |
| 16-B | Missile Shipment Sequence (Transfer Area) | 117 |
| 17-B | Missile Transfer from MAB into SSCBM | 118 |
| 19-B | SSCBM and Trailer Transfer on to Railway Car | 119 |
| 20-B | Missile Transfer from SSCBM into Storage Building (Transfer Area) | 120 |
| 21-B | SSCBM Transient Storage Area | 121 |

## SECTION B

## MISSILE ASSEMBLY AND CHECKOUT

SCOPE

This section present the technical requirements for assembly and checkout of SM-80 Missiles at A/F Plant 77. These technical requirements are based on the delivery of completed SM-80 Missiles from A/F Plant 77 in accordance with the Operational Missile Model Specification S-133-1000.

GROUND RULES

In addition to the General Ground Rules in Section A, the following will apply specifically to this section:

1. All airborne equipment and all OGE/MGE items which are delivered with a missile will, upon receipt at A/F Plant 77, be visually inspected for possible damage incurred in shipping and handling. Inspection will be conducted from procedures defined in Manufacturing and Inspection Records (M&IR). Disposition of all damaged items will be handled in accordance with Quality Control Document D1979.
2. Electrical/electronic components with the exception of the airborne G&C sections, nozzle control units, angular accelerometers and raceway cables will be functionally tested at A/F Plant 77 prior to assembly to the missiles. Testing will be limited to the minimum necessary to assure proper functioning of the item prior to assembly and integration into the missile. It is expected that the amount of testing will decrease with time as confidence in the system builds up.
3. Rocket motors, installed on rocket motor carriages, will be received in rocket motor trucks and will have the ignition and thrust termination (Stage III only) devices installed complete with pins. ~~and red streamers~~. R

SECTION B

GROUND RULES (Continued)

3.

These devices will not be removed at A/F Plant 77 unless physical damage is incurred during rocket motor missile handling or assembly.

4. Storage bldgs. will be utilized for storage of either multiple stages (Stage I, II, and III), replacement rocket motors or for storage of the completed missiles.

5. Transport of rocket motors from storage bldgs. to the MAB will be by SSCBM, or other approved vehicles. (See B4.4 for alternate method).

6. The assembled missile will be transferred from the MAB Missile Joining Rails to a SSCBM for subsequent disposition. R

7. All missile and rocket motor transfers will be accomplished by special handling crews, assigned to the Facilities and Services Unit, dispatched upon request to the Material Handling Dispatcher. These crews, will report to the designated area with the appropriate transfer equipment.

8. Assembly of missile components and sections will be predicated on interchangeability in accordance with the requirements of MIL-I-8500A as implemented by associate contractor adherence to Assembly and Interface Control Drawing tolerances.

9. The completed missile will be delivered to the Air Force with the following OGE/MGE items installed on the missile.

   a. Rocket Motor Carriages (Received with rocket motors)(MGE 4078, 4120, & 4121)
   b. Adapter, Ring, Missile Support (OGE 1252)
   c. Clamp Set, Adapter Ring to Missile Skirt (MGE 4069)
   d. Cover, End-G&C Section (FSE 7600)
   e. Alarm Set, Missile Storage - Transit Status((MGE 4187) (with rocket motors) (MGE 4187)

SECTION B

GROUND RULES (Continued)

9. f. Cover, Protective, G&C Window (Received with G&C Section).

g. Cover, Assembly, Dust (Received with G&C Section).

h. Stage I Rocket Motor Nozzle Covers (Received with rocket motor).

i. Stage I Nozzle Support Links (MGE 11306) R

10. Actual weight, balance and configuration data created by repairs or modification to the missile or airborne components, plus the data obtained by weighing of airborne insulation, direct shipped items, or unscheduled changes, will be controlled and reported to the "Mass Properties Integration Contractor" by the AF Plant 77 Weight Group.

The aforementioned data, plus Associate Contractor actual weight, reports on airborne components of their responsibility, will be integrated and incorporated, by the M.P.I.C., into the Missile Handbook of Targeting Parameters.

The weight input into the H.O.T.P., along with other program and missile variables, will be issued to the targeting contractor for operational missile targeting planning and programming.

GROUND RULES (Continued)

11. As a normal operation in all functional testing A/F Plant 77, recording of test data and its acceptance by the Quality Control Department will be accomplished through use of an integrated record system. Accordingly, a specific function or reference to this requirement will not be called out in describing the requirements for each functional test.

12. Common hand tools will be required to support the Missile Assembly and Checkout Functions. Document D2-6629 (Perishable Standard and Portable Capital Tool Document) describes these tools; therefore, they are not listed as a specific requirement in this document.

13. Shipping containers are justified by the associate contractors and are not a deliverable end item at A/F Plant 77. Therefore, they are not included in the Required Equipment List. Reusable shipping containers will be returned to the pipeline, in accordance with Annex E to the OOAMA SM-80 Missile Transportation Plan.

14. Missile/Motor transportation and Handling between the Missile/Motor Storage Buildings and the Missile Assembly Buildings, and Visa-Versa, shall be accomplished without the use of the Missile/Motor Alarm Sets (Fig. A 4187, MRCN 7787 and MRCN 7788).
When it is anticipated that the missile or motor will be subjected to conditions exceding Missile/Motor Safe Limit Criteria, as determined by The Boeing Company, AF Plant 77, the Missile/Motor Alarm Sets will be installed as directed by The Boeing Company, AF Plant 77 with the cognizance of the AFOIC, AF Plant 77. This does not eliminate the requirement to monitor temperature. R

# AIRBORNE EQUIPMENT LIST

| IDENT. Nº | NOMENCLATURE | CLASS | LOCATION & FUNCTION NUMBER | | | | | |
|---|---|---|---|---|---|---|---|---|
| | | | CPA | MAB | ORDNANCE PROCESSING | MISSILE & ENG. STORAGE | MISSILE TRANSFER AREA | MISC. |
| 6005 | Raceway Components-Sections 44-49 | A/B | | B11.7 | | | | |
| 6006 | Deflector Assy.-Base Heating, Stage III | A/B | | B7.2 | | | | |
| 6007 | Deflector Assy.-Base Heating, StageI | A/B | | B7.2 | | | | |
| 6008 | Deflector Assy.-Base Heating, Stage II | A/B | | B7.2 | | | | |
| 6010 | Insulation Components-Fastener and Assy. Joint | A/B | | B11.11 | | | | |
| 6011 | Support Components - Elect. Cabling, Separable | A/B | | B7.1 | | | | |
| 6020 | Arm and Disarm Mechanism, Stage Separation and Skirt Removal | A/B | | B7.4 | | | | |
| 6201 | Missile Guidance Control (N10 and MD3) | A/B | | B9.0 | | | | |
| 6202 | Angular Accelerometer (P68) | A/B | | B7.5 | | | | |
| 6203 | NCU Stage I (P70) | A/B | | B5.2 | | | | |
| 6016 | Streamer Assy's - Ordnance Safety Pins | A/B | | B11.4 | | | | |

# AIRBORNE EQUIPMENT LIST

| IDENT. Nº | NOMENCLATURE | CLASS | LOCATION & FUNCTION NUMBER | | | | | |
|---|---|---|---|---|---|---|---|---|
| | | | CPA | MAB | ORDNANCE PROCESSING | MISSILE & ENG. STORAGE | MISSILE TRANSFER AREA | MISC. |
| 6204 | NCU Stage II (P71) | A/B | | B5.2 | | | | |
| 6205 | NCU Stage III (P72) | A/B | | B5.2 | | | | |
| 6206 | Electrical Cabling Unit-Separable Stage I (P81) | A/B | | B7.1 | | | | |
| 6207 | Electrical Cabling Unit-Separable Stage II (P82) | A/B | | B7.1 | | | | |
| 6208 | Electrical Cabling Unit-Separable Stage III (P83) | A/B | | B7.1 | | | | |
| 6209 | Battery Assy - SE 12 | A/B | B3.1 | | | | | |
| 6210 | Battery Assy - SE 13 | A/B | B3.1 | | | | | |

# AIRBORNE EQUIPMENT LIST

| IDENT. Nº | NOMENCLATURE | CLASS | LOCATION & FUNCTION NUMBER | | | | | |
|---|---|---|---|---|---|---|---|---|
| | | | CPA | MAB | ORDNANCE PROCESSING | MISSILE & MTR STORAGE | MISSILE TRANSFER AREA | MISC. |
| 6401 | Engine-Rocket, Solid Propellant Operational (Stage III) | A/B | | B7.4 | | | | |
| 6501 | Interstage Assy- Insulated, Stage II-III | A/B | | B11.3, B7.4 | | | | |
| 6503 | Ordnance Assy's - Separation & Skirt Removal, Interstage II-III | A/B | | B11.9 | | | | |
| 6507 | Bracket Components -Cable Disconnect Interstage II-III | A/B | | B11.2 | | | | |
| 6601 | Engine-Rocket, Solid Propellant, Operational (Stage II) | A/B | | B7.4 | | | | |
| 6701 | Interstage Assy-Insulated, Stage I-II | A/B | | B7.4, B11.3 | | | | |
| 6402 | Engine, 3rd Stage, Inert | GTM 077 | | B7.4 | | | | |
| 6508 | Ordnance Assy's-Inert, Separation and Skirt Removal, Interstage II-III | GTM 077 | | B11.9 | | | | |
| 6602 | Engine, 2nd Stage, Inert | GTM 077 | | B7.4 | | | | |

REVISED 9-14-62
U3 4288 2000 (WAS BAC 4131D)
BOEING | VOL. - | NO. D2-11162
SEC. B | PAGE 13

# AIRBORNE EQUIPMENT LIST

| IDENT. Nº | NOMENCLATURE | CLASS | LOCATION & FUNCTION NUMBER | | | | | |
|---|---|---|---|---|---|---|---|---|
| | | | CPA | MAB | ORDNANCE PROCESSING | MISSILE & ENG. STORAGE | MISSILE TRANSFER AREA | MISC. |
| 6703 | Ordnance Assy's-Separation & Skirt Removal Interstage I-II | A/B | | B11.9 | | | | |
| 6706 | Bracket Components-Cable Disconnect, Interstage I-II | A/B | | B11.2 | | | | |
| 6801 | Engine-Rocket, Solid Propellant, Operational (Stage I) | A/B | | B7.4 | | | | |
| 6901 | Skirt Assembly-Insulated, Stage I | A/B | | B7.3 | | | | |
| 6707 | Ordnance Assy's-Inert, Separation & Skirt Removal, Interstage I-II | GTM 077 | | B11.9 | | | | |
| 6802 | Engine, 1st Stage, Inert | GTM 077 | | B7.4 | | | | |

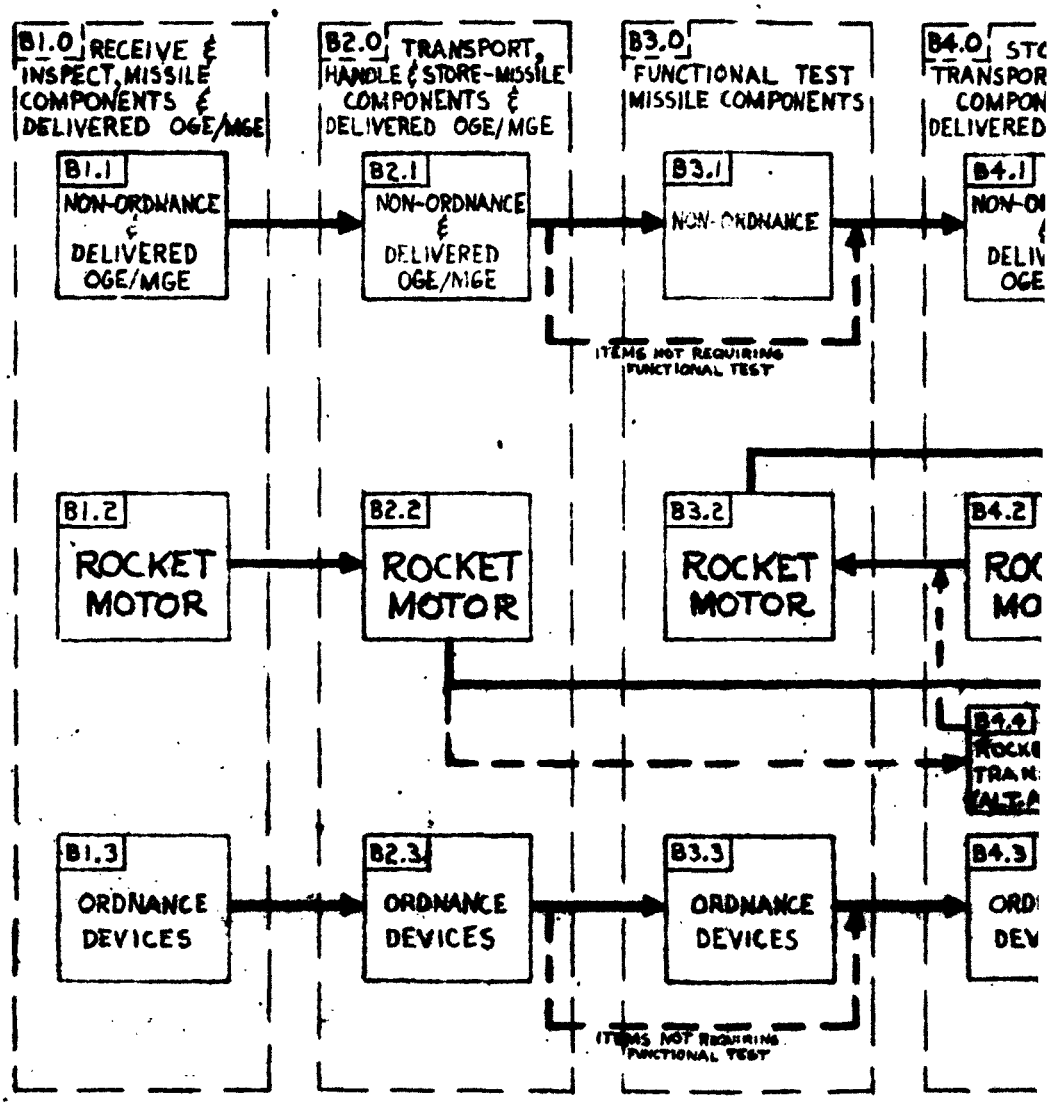
B1.0 RECEIVE & INSPECT, MISSILE COMPONENTS & DELIVERED OGE/MGE
B2.0 TRANSPORT, HANDLE & STORE-MISSILE COMPONENTS & DELIVERED OGE/MGE
B3.0 FUNCTIONAL TEST MISSILE COMPONENTS
B4.0 STO TRANSPOR COMPON DELIVERED
B1.1 NON-ORDNANCE & DELIVERED OGE/MGE
B2.1 NON-ORDNANCE & DELIVERED OGE/MGE
B3.1 NON-ORDNANCE
B4.1 NON-O & DELIV OGE
ITEMS NOT REQUIRING FUNCTIONAL TEST
B1.2 ROCKET MOTOR
B2.2 ROCKET MOTOR
B3.2 ROCKET MOTOR
B4.2 ROC MO
B4.4 ROCK TRAN
B1.3 ORDNANCE DEVICES
B2.3 ORDNANCE DEVICES
B3.3 ORDNANCE DEVICES
B4.3 ORD DEV
ITEMS NOT REQUIRING FUNCTIONAL TEST

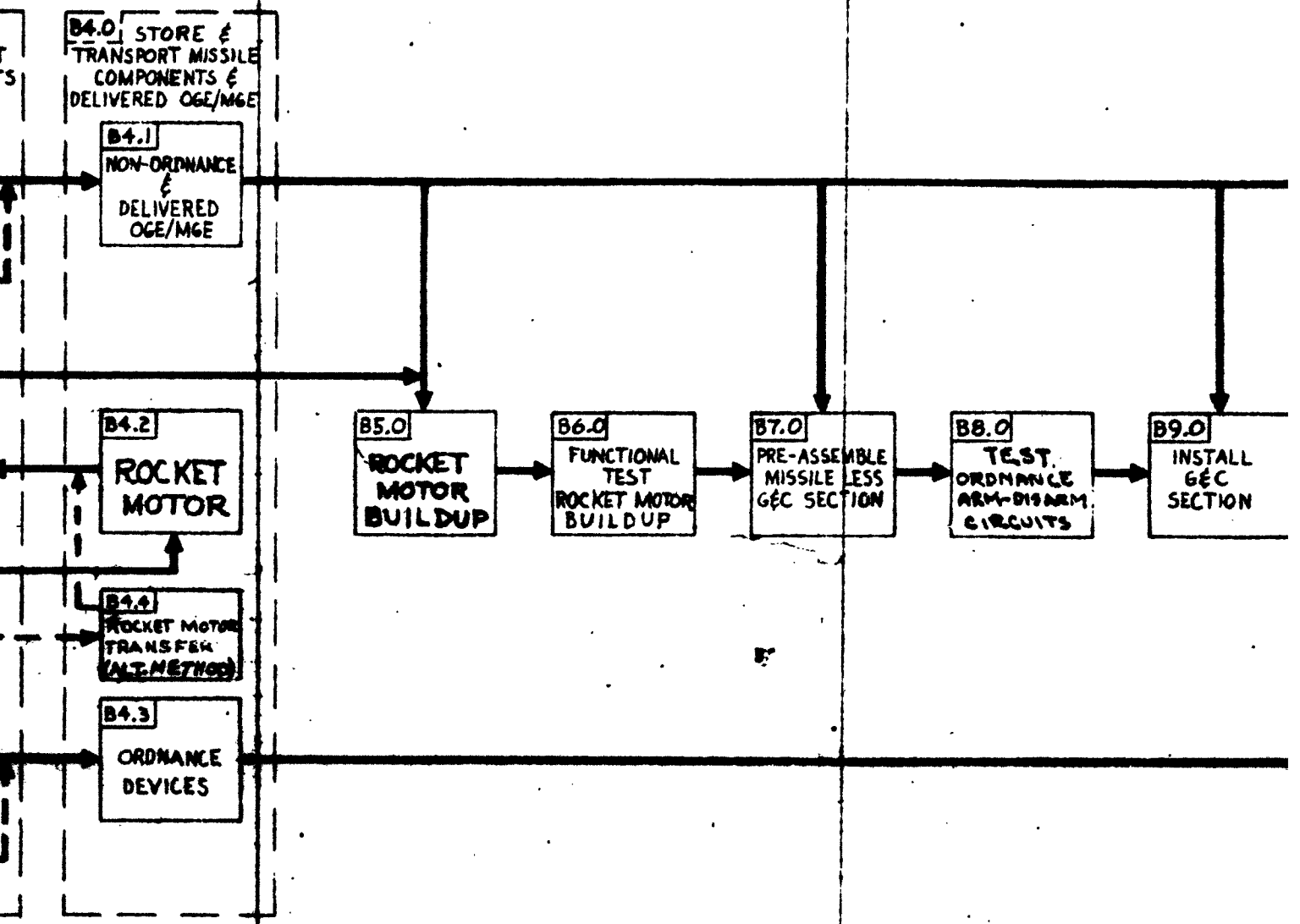
B4.0 STORE & TRANSPORT MISSILE COMPONENTS & DELIVERED OGE/MGE
B4.1 NON-ORDNANCE & DELIVERED OGE/MGE
B4.2 ROCKET MOTOR
B4.4 ROCKET MOTOR TRANSFER (ALT METHOD)
B4.3 ORDNANCE DEVICES
B5.0 ROCKET MOTOR BUILDUP
B6.0 FUNCTIONAL TEST ROCKET MOTOR BUILDUP
B7.0 PRE-ASSEMBLE MISSILE LESS GEC SECTION
B8.0 TEST ORDNANCE ARM-DISARM CIRCUITS
B9.0 INSTALL GEC SECTION

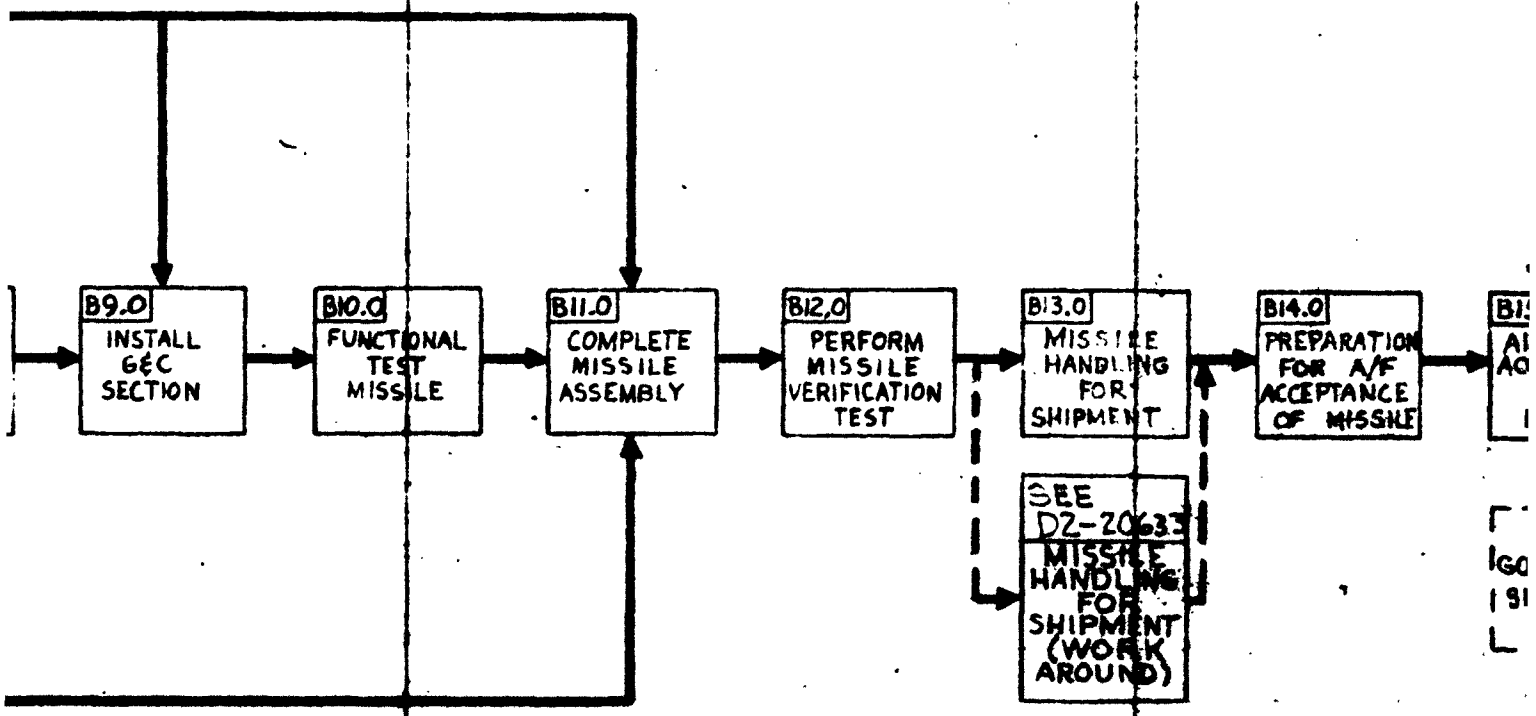


3

| CALC. | | | REVISED | DATE |
|---|---|---|---|---|
| CHECK. | | | | |
| APR. | | | | |
| APR. | | | | |

MASTER FLOW (SE

MISSILE ASSEMB
AND CHECKOUT
A/F PLANT 77

BOEING AIRPLANE COMPAN

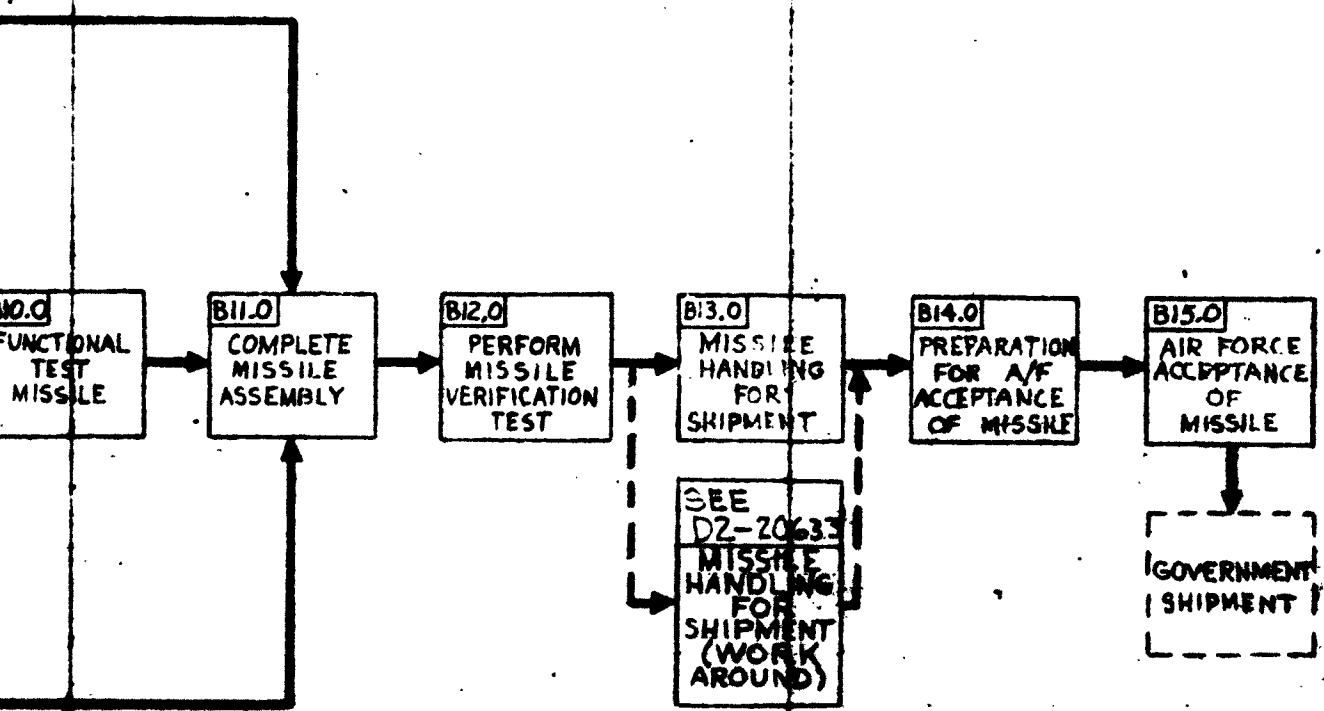


4

| CALC. | | | REVISED | DATE |
|---|---|---|---|---|
| CHECK | | | | |
| APR. | | | | |
| APR. | | | | |

MASTER FLOW (SECT. B)

MISSILE ASSEMBLY AND CHECKOUT A/F PLANT 77

BOEING AIRPLANE COMPANY

11-26-62

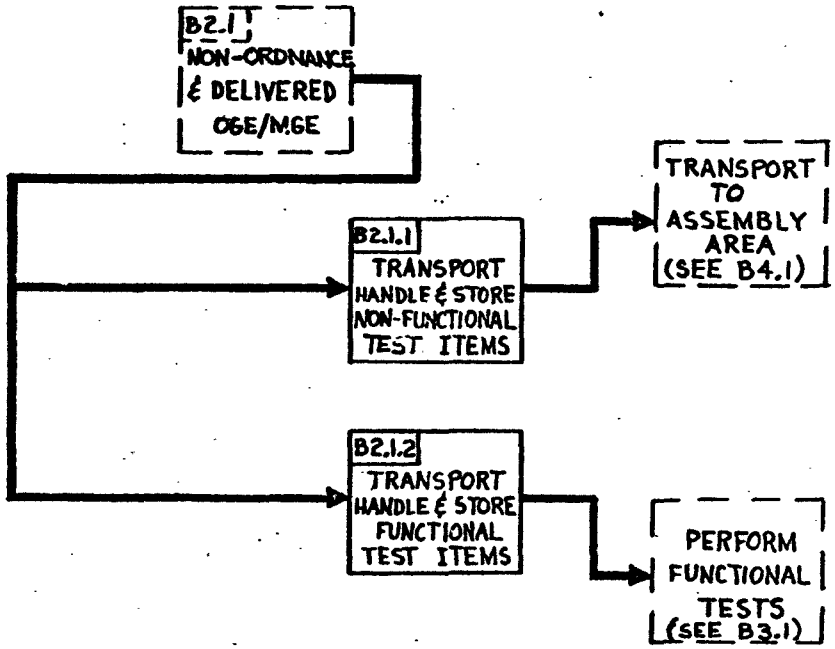


B2.1 TRANSPORT, HANDLE & STORE NON-ORDNANCE & DELIVERED OGE/MGE

FUNCTION No B2.1

REVISED 11-15-61 8-31-61 5-15-61
U3 4288 2500 (WAS BAC 4131D)
BOEING VOL. SEC. B NO. D2-11162 PAGE 16

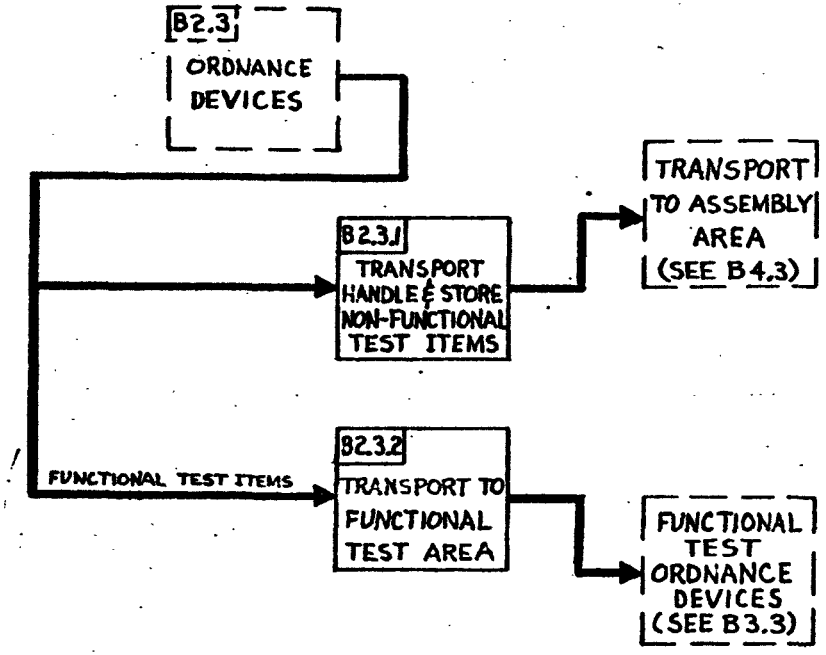


B2.3 TRANSPORT, HANDLE & STORE ORDNANCE DEVICES

FUNCTION Nº B2.3



REVISED 11-15-61 8-31-61 5-15-61
U3 4200 2000 (WAS BAC 41310)

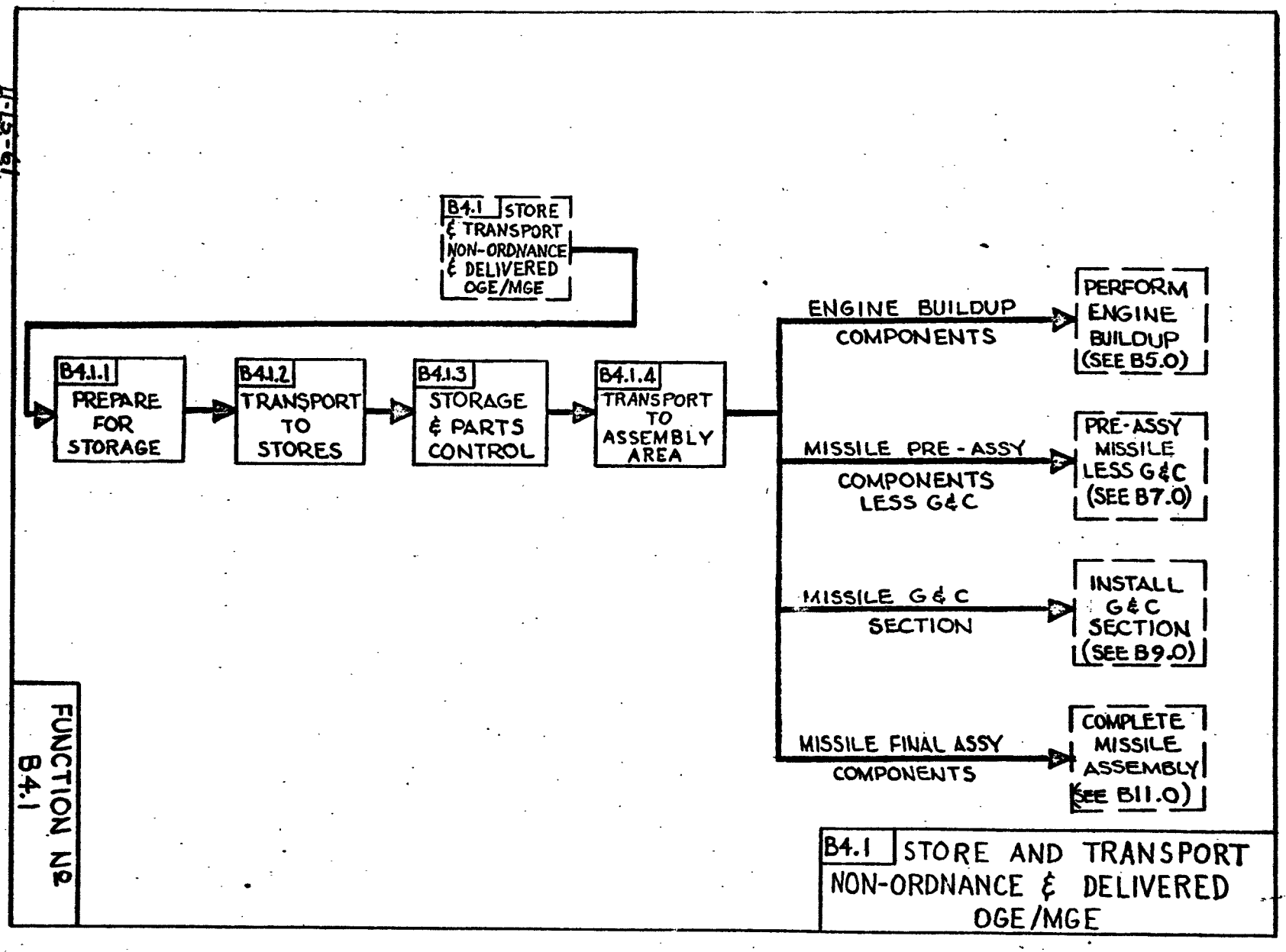


REVISED 11-15-61 8-31-61 5-15-61
U3 4200 2000 (WAS BAC 4131D)
BOEING VOL. SEC. B NO. D2-11162 PAGE 18

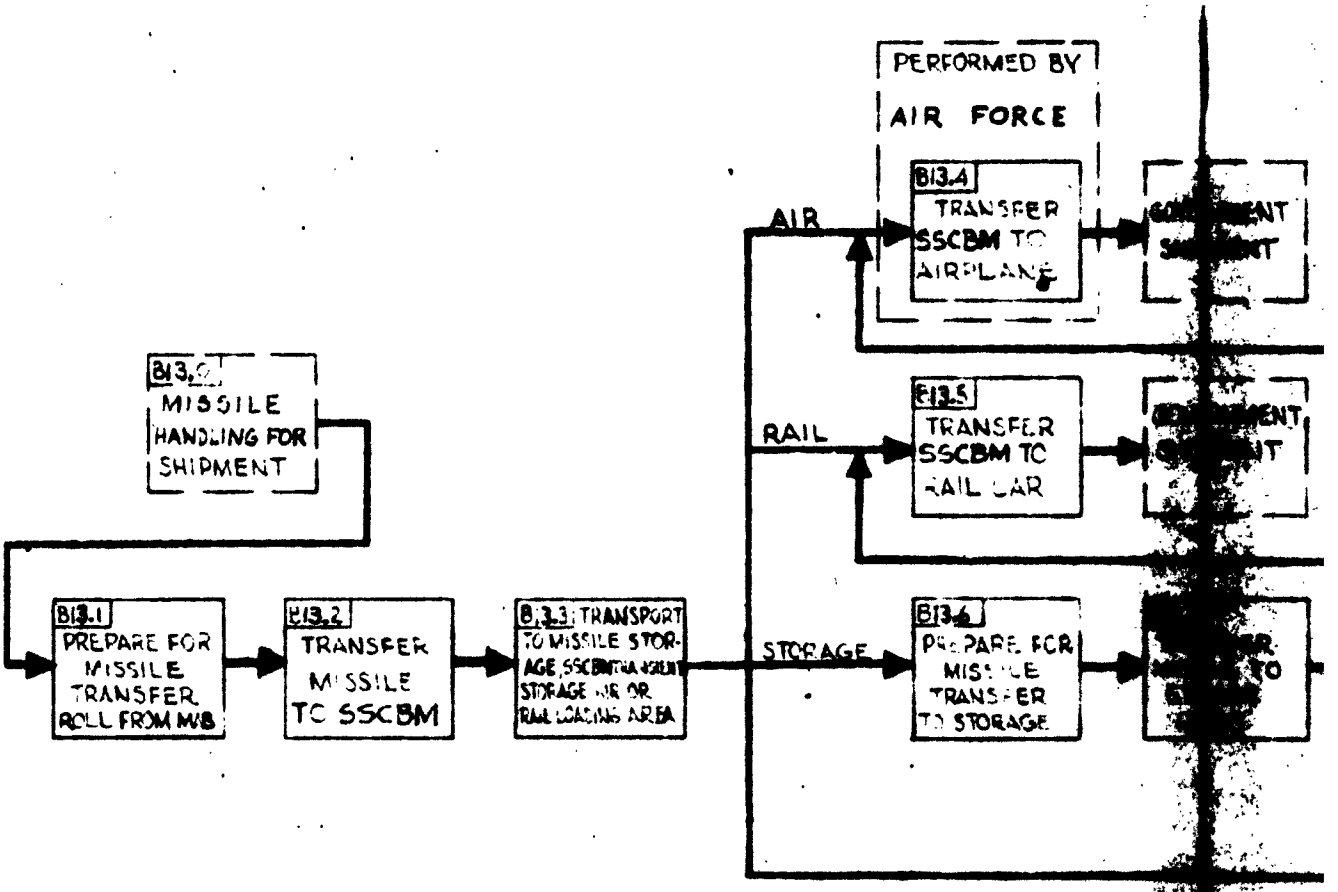
PERFORMED BY
AIR FORCE
B13.4
TRANSFER
SSCBM TO
AIRPLANE
AIR
B13.5
TRANSFER
SSCBM TO
RAIL CAR
RAIL
B13.6
PREPARE FOR
MISSILE
TRANSFER
TO STORAGE
STORAGE
B13.2
TRANSFER
MISSILE
TO SSCBM
B13.1
PREPARE FOR
MISSILE
TRANSFER
ROLL FROM M/B
B13.3 TRANSPORT
TO MISSILE STOR-
AGE, SSCBM TO
STORAGE AIR OR
RAIL LOADING AREA
MISSILE
HANDLING FOR
SHIPMENT

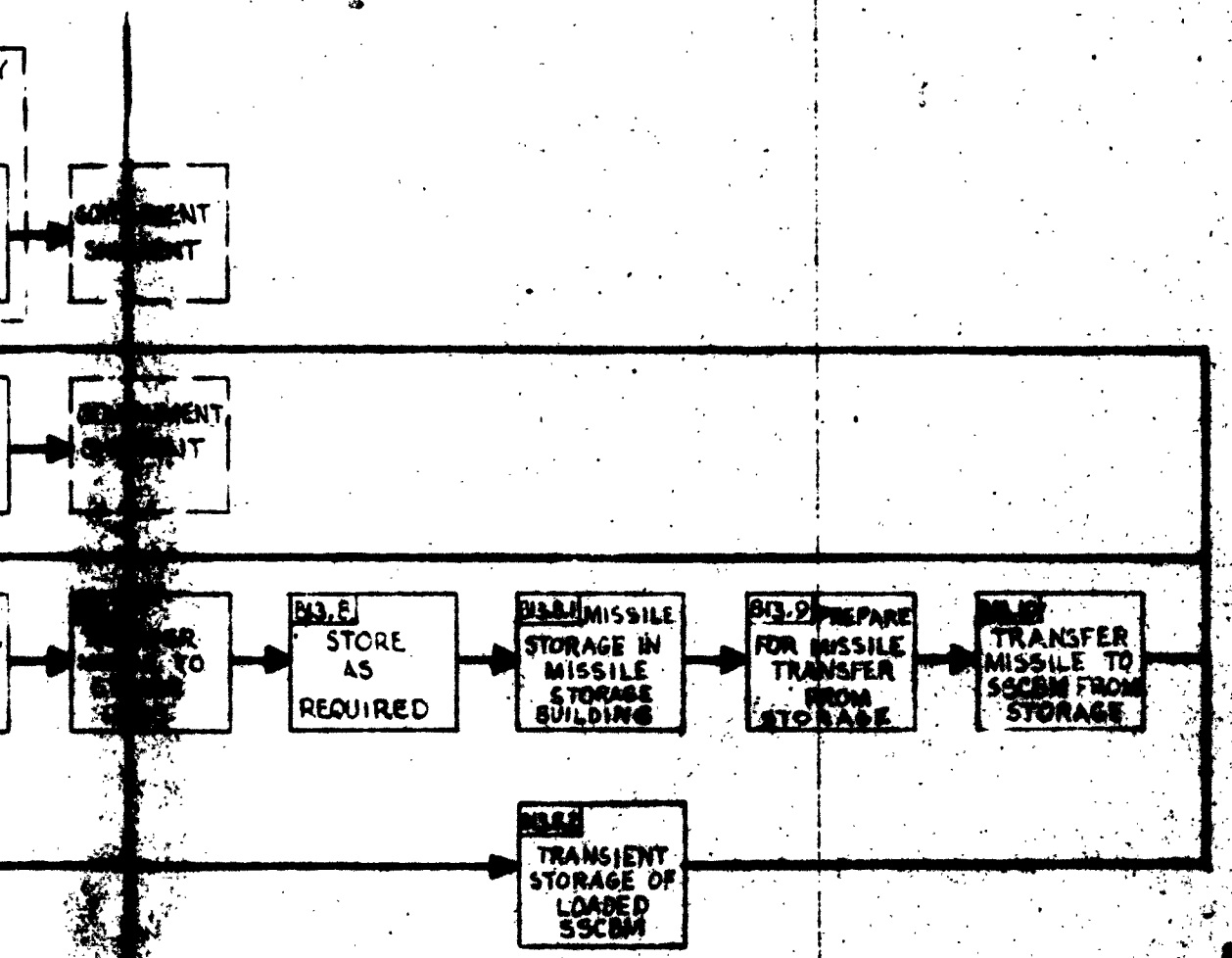


B13.0 MISSILE HANDLING FOR SHIPMENT

| ASSEMBLY OR CHECKOUT FUNCTION AND TECHNICAL REQUIREMENTS | RECOMMENDED EQUIPMENT OR DOCUMENT |
|---|---|
| 1.0 RECEIVE AND INSPECT, MISSILE COMPONENTS AND DELIVERED OGE/MGE<br>All airborne equipment and OGE/MGE to be delivered with the missile shall be thoroughly inspected for physical integrity and possible damage incurred in shipping and handling. The receiving and inspection shall be accomplished in the following buildings:<br>A. Building 1266 - all items except rocket motors and ordnance devices containing explosive charges. (See B1.1)<br>B. Storage Igloos - Stages I, II and III Rocket Motors. (See B1.2)<br>C. Building 1521 - all small ordnance items (See B1.3)<br><br>Detailed Receiving and Inspection Procedures are required. | |
| 1.1 PERFORM RECEIVING AND INSPECTION, NON-ORDNANCE AND DELIVERED OGE/MGE<br>Receiving and inspection of the following components are required:<br>A. Angular Accelerometer<br>B. Deflector Assemblies - Base Heating, Stages I,II & III<br>C. Insulation Components-Fastener and Assembly Joint<br>D. Raceway Components-Sections 44 through 49<br>E. Battery Assemblies<br>F. Interstage Assemblies-Insulated, Stages I-II and II-III<br>G. Electrical Cabling Units-Separable Stage I,II, & III<br>H. Skirt Assembly-Insulated, Stage I<br>I. Support Components-Electrical Cabling, Separable<br>J. Bracket Components-Cable Disconnect Interstage I-II and II-III<br>K. Interstage Separation Arm-Disarm Devices | |

| ASSEMBLY OR CHECKOUT FUNCTION AND TECHNICAL REQUIREMENTS | RECOMMENDED EQUIPMENT OR DOCUMENT |
|---|---|
| 1.1 PERFORM RECEIVING AND INSPECTION, NON-ORDNANCE AND DELIVERED OGE/MGE (CONT) | |
| L. Missile Guidance Control (including handling ring, umbilical dust cover and window cover) | |
| M. Adapter, King, Missile Support (OGE 1252) | |
| N. Clamp Set, Adapter Ring to Missile Skirt (MGE 4069) | |
| O. Cover, End-G&C Section (FSE 7600) | |
| P. NCU I, II and III (including adapter frames) | |
| Q. Stage I Nozzle Support Link Kit (MGE 11306) | R |
| Rail or highway shipments of the above items shall be delivered to the loading dock of Building 1266. The carrier shall present his shipment to Production Control personnel for acceptance. Military air shipments shall be picked up at the airfield and delivered to Building 1266. | |
| 111.1 RECEIVE EQUIPMENT AT RECEIVING DOCK | |
| Receiving operations shall be in accordance with D2-6610. | Camera and Tripod, Still Picture (ACO 448)<br>Truck, Lift-Fork (ACO 453)<br>Truck, Motor-Misc. Delivery (ACO 452)<br>Truck, Lift-Jack (ACO 461)<br>D2-6610 Missile Production Operating Logistics-A/F Plant 77 SemiTrailer, Rocket Motor (FSE 101) R |
| | FUNCTION B1.1 |

| ASSEMBLY OR CHECKOUT FUNCTION AND TECHNICAL REQUIREMENTS | RECOMMENDED EQUIPMENT OR DOCUMENT |
|---|---|
| 1.1.2 HANDLE AND TRANSPORT TO R&I AREA<br>Move components from the carrier into the Receiving and Inspection Area. (See B2.1) | |
| 1.1.3 UNCRATE FOR INSPECTION<br>Components require uncrating to the extent necessary to provide accessibility to shipping documents, inspection for quantity and identification and visual damage. The G&C Section shall be uncrated in an area where the environment is maintained as follows:<br>Temperature = 80° ± 20° F. and maximum dew point = 57°F. | Sling-Standard, Factory-4 drop (ACO 454) |
| 1.1.4 PERFORM INSPECTION<br>All Weight and Balance Data accompanying the components shall be forwarded to the Weights Group. | |
| 1.1.5 RECRATE<br>After inspection, components shall be recrated and prepared for transporting to CPA or Store as required. (For Transport, Handle and Store, See B2.1) | |
| 1.2 PERFORM RECEIVING AND INSPECTION - ROCKET MOTORS, STAGE I, II AND III<br>Receiving and inspection of the three rocket motors is required. All motors shall be delivered in rocket motor trucks by a commercial carrier under Government Bills of Lading. The motor Safe and Arm Devices, including Stage III Thrust Termination Arm-Disarm Device, will be received on the motors and shall not be removed for inspection or testing. | |

FUNCTION B1.1.3

| ASSEMBLY OR CHECKOUT FUNCTION AND TECHNICAL REQUIREMENTS | RECOMMENDED EQUIPMENT OR DOCUMENT |
|---|---|
| 1.2.1 RECEIVE ROCKET MOTORS | |
| Receiving operations shall be in accordance with Document D2-6610. The rocket motor trucks shall be met at the gate of the Motor Storage Area and escorted to a designated storage building. | D2-6610 Missile Production Operating Logistics A/F Plant 77 |
| 1.2.2 PERFORM INSPECTION AND PROCESS RECORDS | |
| Motor inspection shall include: | D2-11777 D2-12214 D2-12369 D2-9555 |
| A. recording alarm set data (if installed) | |
| B. checking for rotation of Stage I, Stage II and Stage III Motor in the rocket motor carriage, and centering of carriages. | |
| C. visual inspection of motor and carriage for damage | |
| D. obtaining accountibility information on: | |
| 1. rocket motor | |
| 2. motor component and protective devices | |
| 3. alarm set (if installed) | |
| 4. rocket motor carriages | |
| 5. horizontal restraint - rocket motor | |
| q E. verifying availability of nozzle alignment data with each motor, all weight and balance data accompanying the motor shall be forwarded to the Weights Group. | R |
| F. verify that the Ord. Safety Pins are installed on the rocket motor ordnance devices. | R |
| NOTE: Warning tags shall be installed on the Safety Pins. | FUNCTION B1.2.1 |

| ASSEMBLY OR CHECKOUT FUNCTION AND TECHNICAL REQUIREMENTS | RECOMMENDED EQUIPMENT OR DOCUMENT |
|---|---|
| 1.3 PERFORM RECEIVING INSPECTION - ORDNANCE DEVICES<br>The Ordnance Assemblies-Separation and Skirt Removal (Interstage I-II and II-III), spare Engine Safe and Arm, spare Third Stage Thrust Termination Arm - Disarm and Interstage Arm - Disarm Devices shall be received and inspected in Building 1521. Safety requirements specified in D2-12872, shall be complied with. | |
| 1.3.1 RECEIVE COMPONENTS AT ORDNANCE PROCESSING AREA<br>Receiving operations shall be in accordance with Document D2-6610. | D2-6610 Missile Production Operating Logistics A/F Plant 77 |
| 1.3.2 PERFORM VISUAL INSPECTION<br>Inspection of ordnance devices shall verify that all Safing Pins are properly installed. All Weight and Balance Data, accompanying ordnance devices, shall be forwarded to the Weights Group. (For transport, Handle and Store, See B2.3) | |

| ASSEMBLY OR CHECKOUT FUNCTION AND TECHNICAL REQUIREMENTS | RECOMMENDED EQUIPMENT OR DOCUMENT |
|---|---|
| 2.0 TRANSPORT, HANDLE AND STORE-MISSILE COMPONENTS AND DELIVERED OGE/MGE<br><br>All missile components and OGE/MGE (to be delivered with the missile) must be transported, handled and stored until delivery to the appropriate CPA or MAB Area for processing for installation. Detailed Transportation, Handling and Storage Procedures are required. | |
| 2.1 TRANSPORT, HANDLE AND STORE - NON-ORDNANCE AND DELIVERED OGE/MGE<br><br>Transportation, handling and storage procedures of non-ordnance items shall be in accordance with Document D2-13907. | D2-13907 Transportation and Handling Procedure, Plant 77 |
| 2.1.1 TRANSPORT, HANDLE AND STORE - NON-FUNCTIONAL TEST ITEMS<br><br>The following items require no component testing and shall be delivered to the storage area.<br><br>A. Deflector Assemblies -Base Heating, Stages I, II and III<br>B. Insulation Components-Fastener and Assembly Joint<br>C. Raceway Components - Sections 44 through 49<br>D. Skirt Assembly - Insulated, Stage I<br>E. Interstage Assemblies-Insulated, Stages I-II and II-III<br>F. Adapter, Ring, Missile Support (OGE 1252)<br>G. Clamp Set, Adapter Ring to Missile Skirt (MGE 4069)<br>H. Cover, End-G&C Section (FSE 7600)<br>I. Support Components -Electrical Cabling, Separable<br>J. Bracket components -Cable Disconnect, Interstages I-II and II-III | Truck, Lift-Fork (ACO 453)<br><br>Truck, Motor-Misc. Delivery (ACO 452)<br><br>Semitrailer, Rocket Motor (FSE 101)<br>NOTE: For use in transporting Air-borne equipment when outside environment exceeds specification limits. R |

| ASSEMBLY OR CHECKOUT FUNCTION AND TECHNICAL REQUIREMENTS | RECOMMENDED EQUIPMENT OR DOCUMENT |
|---|---|
| 2.1.1 TRANSPORT, HANDLE AND STORE-NON-FUNCTIONAL TEST ITEMS (CONT) | |
| K. Angular Accelerometer* | |
| The following items do not require functional test and shall be delivered to the Component Processing Area: | |
| A. NCU I, II and III** | |
| B. Missile Guidance Control** | |
| (For handling, storage and transportation to MAB for installation, See B4.0) | |
| 2.1.2 TRANSPORT, HANDLE AND STORE-FUNCTIONAL TEST ITEMS | |
| The following items require functional testing and shall be delivered to the Component Processing Area. (Building 1265) | |
| A. Battery Assemblies | |
| B. Electrical Cabling Units, Separable** | |
| The following items require functional testing and shall be delivered to the Ordnance testing area (Bldg. 1521) | |
| A. Interstage Separation Arm-Disarm Devices. | |
| B. Interstage Separation Detonators. | |
| (For functional testing of these items, see B3.1, and B3.3) | |
| *This item shall be routed to the Component Processing Area to be functionally tested for three missiles only. | R |
| ** These items shall be functionally tested for three missiles only. | R |
| | FUNCTION B2.1.1 |

| ASSEMBLY OR CHECKOUT FUNCTION AND TECHNICAL REQUIREMENTS | RECOMMENDED EQUIPMENT OR DOCUMENT |
|---|---|
| 2.2 TRANSPORT, HANDLE AND STORE ROCKET MOTORS | |
| For convenience of handling, Stage I, II and III motors shall normally be placed and stored in numerical order in the same Motor Storage Bldg. with nozzles pointed away from the door. | D2-12214 Rocket Motor Inspection Procedure, Storage and Safety Stage II |
| Motor Transport, Handling and Storage Procedures are required and shall be in accordance with the respective motor manufacturer's procedures and Document D2-12872. The motors shall arrive at the motor transfer positions (in front of each Motor Storage Bldg) aboard rocket motor trucks. | D2-11777 Stage III Transportation and Handling Procedures<br>D2-12216 Handling, Operating & Maintenance & M 56 Rocket Motor (Stage II)<br>D2-12369 Transportation Handling & Storage M55 Rocket Motor (Stage I) |
| | FUNCTION B2.0 |

| ASSEMBLY OR CHECKOUT FUNCTION AND TECHNICAL REQUIREMENTS | RECOMMENDED EQUIPMENT OR DOCUMENT |
|---|---|
| 2.2.1 PREPARE FOR MOTOR TRANSFER | |
| The following defined equipment will be required to perform all operations necessary to prepare the motors for roll transfer into the storage igloo: | |
| A. A means to connect the rail system in the rocket motor truck to the rail system in the Motor Storage Igloo. This connection must be of adequate strength to support any stage rocket motor. | Rail Assembly, Bridge, Engine Transfer (FSE 7756) |
| B. A means to provide the mode of power for moving the motors from the rocket motor trucks into the storage igloo. | (Part of Fig. A 7629) |
| | FUNCTION |

| ASSEMBLY OR CHECKOUT FUNCTION AND TECHNICAL REQUIREMENTS | RECOMMENDED EQUIPMENT OR DOCUMENT |
|---|---|
| 2.2.1 PREPARE FOR MOTOR TRANSFER (Cont) | |
| C. A means to provide rail positioning for rocket motor transfer capable of receiving, supporting and stablizing the rocket motor trucks. | Jack, Leveling-Support (ACO 415)<br>Platform, Platable-Highway Transporters (FSE 7666)<br>D2-11051 (O&M) |
| D. A means of grounding the rocket motor truck to earth potential. | Lead, Electrical Grounding (ACO 352) |
| E. A means of moving and positioning the transporter platforms. | Truck, Lift-Fork (ACO 453) |
| F. A means to receive and support the motors in their respective handling carriages in the motor storage buildings. This shall include permanently installed electric winches, grounding cables for motor transfer, snatch blocks for use with tranfer cables, harness wheels, provisions for grounding rocket motor carriages and for receiving bridge rails. | Rails, Storage-Engine & Missile (FSE 7629)<br>D2-10907 (O&M) |
| G. A means to provide illumination for night transfer. | Lamp, Incandescent Portable Flood (ACO 4425)<br>Cable Assembly - Power Electrical, Portable Flood Lamps (ACO 449) |

FUNCTION B2.2.1

| ASSEMBLY OR CHECKOUT FUNCTION AND TECHNICAL REQUIREMENTS | RECOMMENDED EQUIPMENT OR DOCUMENT |
|---|---|
| 2.2.1 PREPARE FOR MOTOR TRANSFER (CONT'D) | |
| H. A means to provide environmental protection of motors during transfer operations under adverse weather conditions is required in order to maintain motor environment within allowable tolerances. | Shelter, Missile and Motor Transfer Environmental-M/MSB (FSE 7687) D2-10996 O&M |
| I. A means to connect the 1st Stage Rocket Motor Carriage to the Motor and Missile Storage Rails winch cable during rocket motor transfer to the storage building. | Bridle, Rocket Motor Stage I (FSE 7689) D2-10933 (O&M) |
| J. A means to connect the 2nd or 3rd stage Rocket Motor Carriage to the Motor and Missile Storage Rails winch cable during rocket motor transfer to the storage building. | Pulley Bracket Assembly, Transporter, Stage II & III (FSE 7760) R |
| K. A means to control the operation of the permanent winch on the fixed rails during motor transfer to the storage rails. | Winch Control (FSE 7688) D2-10925 (O&M) |
| L. A means to monitor the ambient temperature within the transporting vehicle. | Recorder, Temperature, Portable (ACO 532 ). R |
| | FUNCTION B2.2.1 |

| ASSEMBLY OR CHECKOUT FUNCTION AND TECHNICAL REQUIREMENTS | RECOMMENDED EQUIPMENT OR DOCUMENT | |
|---|---|---|
| 2.2.2 TRANSFER ROCKET MOTOR TO STORAGE RAILS | | |
| All equipment required for actually moving the rocket motor from the rocket motor truck into the storage bldgs. has been described, listed, and positioned in B2.2.1. The Alarm Set (MGE 4187) must be operating and monitored, and the grounding cable must be installed on the rocket motor during the transfer. | | R |
| 2.2.3 STORE AND SECURE EQUIPMENT | | |
| The rocket motor shall be secured in a storage bldgs. and all transfer equipment shall be removed and routed to the Dispatcher for storage. | | R |
| Heating equipment shall ensure that temperature conditions in the Motor Storage bldgs are maintained as follows: Temperature 80° ± 20°F with a dew point of 57°F maximum. Temperature recorders shall indicate the temperature conditions in each bldgs; and humidity recorders installed in random bldgs. shall indicate a representative humidity in the bldgs. | Temperature Recorders (Facility) | R |
| | Humidity Recorder (Facility) | R |
| | | R |
| | | R |
| An external visual alarm shall indicate when adverse conditions are encountered in the bldgs. | Alarm Sytem (Facility) | |
| The Alarm Set [illegible] shall be removed from the carriage and returned with the highway transporter. | D2-11172, Installation Procedure and Installation Test Procedure-Transport Monitor System | R<br>R |
| | FUNCTION B2.2.2 | |

| ASSEMBLY OR CHECKOUT FUNCTION AND TECHNICAL REQUIREMENTS | RECOMMENDED EQUIPMENT OR DOCUMENT |
|---|---|
| 2.2.3.1 INSTALL ROCKET MOTOR RESTRAINT DEVICES<br>It is required that the Restraint Devices be installed on all rocket motors. Rocket motor containment shall be installed as specified in Document D2-14380. Safety requirements specified in D2-12872 shall be complied with. | Device Restraint First Stage (FSE 7789) 62K31248 (Instl).<br>Device Restraint Second Stage (FSE 7790) 62K31249 (Instl).<br>Device Restraint Third Stage (FSE 7791) 62J31250 (Instl).<br>D2-14380, Installation Procedure Restraint Band, Impaling and Puncturing Device. |
| 2.3 TRANSPORT, HANDLE AND STORE-ORDNANCE DEVICES<br>Transportation, handling and storage procedures shall be in accordance with Document D2-9133. Safety requirements specified in Document D2-12872 shall be complied with. | D2-9133 |
| 2.3.1 TRANSPORT, HANDLE AND STORE-NON-FUNCTIONAL TEST ITEMS<br>The Linear Charges shall be transported from their Receiving and Inspection Area to the storage area. Transportation and handling to MAB for installation is required immediately prior to B11.8. | Truck, Motor-Misc. Delivery (ACO 452)<br>Shelving, Storage (ACO 462) |
| 2.3.2 TRANSPORT TO FUNCTIONAL TEST AREA<br>The Detonator Assemblies (Stage Separation), spare Engine Ignition Safe and Arm, spare Third Stage Thrust Termination Arm - Disarm and Interstage Arm-Disarm devices require functional testing and shall be delivered to the Ordnance Test Area. (For functional testing, See B3.3.) | FUNCTION B2.3 |

| ASSEMBLY OR CHECKOUT FUNCTION AND TECHNICAL REQUIREMENTS | RECOMMENDED EQUIPMENT OR DOCUMENT |
|---|---|
| 3.0 FUNCTIONAL TEST - MISSILE COMPONENTS<br>Functional tests of missile components shall be conducted in the Component Processing Area, Missile Assembly Buildings and Squib Ignitor Building. Detailed Functional Test Procedures are required. | |
| 3.1 FUNCTIONAL TEST - NON-ORDNANCE<br>Non-ordnance missile components requiring functional test shall be received in the Component Processing Area for testing. (See B2.1)<br>Functional test and handling procedures are required and shall be in accordance with the appropriate associate contractor procedures. | |
| NOTE: NCU's, N1O's, and Angular Accelerometers to be installed on three missiles shall be functionally tested. (See E1.3). Thereafter, only linkage adjustments will be made to the NCU's. NCU's, N1O's and Angular Accelerometers shall be functionally tested when data obtained during missile testing in the MAB indicates testing to be required. | |

| ASSEMBLY OR CHECKOUT FUNCTION AND TECHNICAL REQUIREMENTS | RECOMMENDED EQUIPMENT OR DOCUMENT |
|---|---|
| .3.1.1 PREPARE FOR FUNCTIONAL TEST | |
| The following missile components shall be received at the Component Processing Area in their shipping containers: | Truck, Lift-Fork (ACO 453)<br>Truck, Motor-Misc. Delivery (ACO 452)<br>Hoist, Portable (ACO 405), Portable (ACO [illegible]) |
| A. The battery packages (Stages I & II NCU's and G&C Section) shall be removed from their containers, hand carried to the Battery Test Position (See Figure 3-B) and connected to the test equipment. | Test Set Assembly, Ordnance Circuit (FSE 7679) |
| B. The NCU's and Adapter Frames shall be removed from their containers and installed on their respective trailers. After removal of the NCU Sling, the trailer and NCU assembly shall be removed to a battery installation area where necessary disassembly, reassembly and electrical connections for installation of a functionally tested Battery Package shall be accomplished. (See function B3.1.1.1) | NCU (H9) Sling (FSE 610)<br>NCU (H2) Trailer, Stage I (FSE 614)<br>NCU (H8) Trailer, Stage II (FSE 615)<br>NCU (H13) Trailer, Stage III (FSE 620)<br>EM2084 (O&M) |

FUNCTION B3.1.1

| ASSEMBLY OR CHECKOUT FUNCTION AND TECHNICAL REQUIREMENTS | RECOMMENDED EQUIPMENT OR DOCUMENT |
|---|---|
| 3.1.1 PREPARE FOR FUNCTIONAL TEST (CONT)<br><br>The NCU's on their trailer, with battery package installed, shall be moved into the NCU Linkage Adjustment Test Position (see Figure 2-B), and the test equipment connected.<br><br>NOTE: A spacer is required between the Stage II NCU and Handling Frame to permit NCU linkage adjustment. | NCU Linkage Adjustment Position Equipment list (see list at left) |
| NCU LINKAGE ADJUSTMENT POSITION<br><br>Cable Assemblies, Interconnecting, Linkage Adjustment, CPA (FSE 7742)<br><br>Distribution Box, NCU Linkage Adjustment (FSE 7743)<br><br>Power Supply Group, NCU Linkage Adjustment (FSE 7744)<br><br>Test Set, NCU Zero Alignment (FSE 7724)<br><br>Gage, NCU Alignment, Stage I (FSE 10151)<br><br>Gage, NCU Alignment, Stage II (FSE 10155)<br><br>Gage, NCU Alignment, Stage III (FSE 10159)<br><br>Table, Work-Electronic Test (ACO 456)<br><br>Bracket, Spacer Stage II NCU (FSE 7793) | |
| 3.1.1.1 PERFORM FUNCTIONAL TEST<br><br>A. The Battery package functional tests shall check the resistance of the battery squibs and the circuit continuity of the different elements of the battery. | D2-13445 Ordnance Component and Subsystem Test Procedures |
| B. The NCU's testing shall consist of the mechanical adjustment of the actuator linkages to values | D2-13732 NCU Linkage Adjustment Procedures |

| ASSEMBLY OR CHECKOUT FUNCTION AND TECHNICAL REQUIREMENTS | RECOMMENDED EQUIPMENT OR DOCUMENT |
|---|---|
| 3.1.1.1 PERFORM FUNCTIONAL TEST (continued) | |
| prescribed for the individual rocket motors. The NCU and a rocket motor then become a matched set. (See B5.0) | |
| 3.1.2 DISCONNECT TEST EQUIPMENT | |
| 3.1.3 BATTERY INSTALLATION | |
| Functionally tested battery packages shall be installed in Stage I, Stage II NCU's and in the G&C Section. | AA0304-072 NCU Sealing Specification |
| A. NCU Battery Installation. | Drawing: 25-27597 25-27598 |
| A functionally tested battery package shall be installed and the necessary reassembly and sealing accomplished. | |
| B. G&C Section Battery Installation. | |
| The G&C section with handling ring, dust cover, and window cover shall be removed from the container and installed on a test fixture. The hoisting sling and cover shall be removed, the G&C end cover installed and the test fixture moved to the battery installation area. A functionally tested battery package shall be installed and the necessary reassembly and sealing accomplished. (For repackaging and transportation to storage, see B4.1) | Facility test fixture (ACO 0565)<br>Hoisting Sling and Cover (ACO 0608)<br>EM 2084 (O&M)<br>Sling, G&C Section Shipping Container Cover (ACO 468) |
| NOTE: The weight of the materials added to the components shall be measured and the location of application recorded on a Weight and Balance form. When component sealing is completed, the form or forms shall be forwarded to the Weights Group. | Drawing 25-27596<br>Cover, End - G&C Section (FSE 7600) D2-11081 (O&M)<br>Scales Weighing (Facility) |

| ASSEMBLY OR CHECKOUT FUNCTION AND TECHNICAL REQUIREMENTS | RECOMMENDED EQUIPMENT OR DOCUMENT |
|---|---|
| 3.1.4 PREPARE FOR STORAGE<br>For repackaging and transportation to storage, see function B6.1. | |
| 3.2 FUNCTIONAL CHECK - ROCKET MOTORS<br>Functional testing of rocket motors shall be limited to manually checking deflection of the nozzles and shall be accomplished in the Missile Assembly Buildings. | |
| 3.2.1 PREPARE FOR CHECK<br>The rocket motors shall be positioned in the rocket motor test position (See B4.2 and Figure 6-B) which utilize elevated work platforms with drop leaves and portable steps for personnel access. Nozzle supports shall be removed from all rocket motors. | Scaffolding-Missile Access (FSE 7630)<br>D2-10903 (O&M) |
| 3.2.2 PERFORM FUNCTIONAL CHECK<br>The nozzles shall be manually deflected to insure free freedom of movement. | |

FUNCTION B3.1.4

| ASSEMBLY OR CHECKOUT FUNCTION AND TECHNICAL REQUIREMENTS | RECOMMENDED EQUIPMENT OR DOCUMENT |
|---|---|
| 3.3 FUNCTIONAL TEST - ORDNANCE DEVICES | |
| The Stage Separation Detonator Assemblies, spare motors Ignition Safe and Arm, spare Third Stage Thrust Termination Arm - Disarm and Interstage Arm - Disarm Devices shall be functionally tested in the Squib and Ignitor Building 1521. | |
| Functional Test Procedures, in accordance with the appropriate manufacturer's test procedures, are required. Requirements specified in Document D2-12872 shall be complied with. | D2-[illegible] [illegible] Functional Test Procedures, Ordnance Devices |
| 3.3.1 PREPARE FOR TEST | |
| The approximate equipment layout of the required test position is shown in Figure 10-B. | Test Set-Ordnance Electrical, 70143 (FSE 131) D2-12205 (O&M) |
| The ordnance devices shall be placed on the Test fixture in the test chamber and the test equipment shall be verified by self-check prior to test connections. Test connections of the ordnance devices to the test set must be accomplished outside the test chamber. | Fixture, Test - Ordnance Device (FSE 7678) Wrench, Safing Pin Instl. & Removal (ACC 4047) Scale, [illegible] Spring, 50 lb. [illegible] (ACC ) |

FUNCTION B3.3.1

| ASSEMBLY OR CHECKOUT FUNCTION AND TECHNICAL REQUIREMENTS | RECOMMENDED EQUIPMENT OR DOCUMENT |
|---|---|
| 3.3.2 PERFORM FUNCTIONAL TEST<br>Functional tests shall include:<br>A. Checking the resistance of the Stage Separation Detonator Assembly bridgewire circuits.<br>B. Performing squib circuit resistance checks, contact resistance checks, no-fire checks and motor activation on spare engine Ignition Safe and Arm Devices.<br>C. Performing motor activation tests, squib circuit and continuity checks on spare Third Stage Thrust Termination Arm-Disarm and Interstage Arm-Disarm Devices. | D2-13483, Detonator Test Procedure<br>D2-12217 Ignitor Safe and Arm Functional Test Procedures<br>D2-13482 Arm/Disarm Functional Test Procedure<br>D2-11776 Thrust Termination Switch Functional Test Procedures |
| 3.3.3 REMOVE FROM TEST POSITION<br>Verify that the device safing pin is in place and disconnect the test equipment. Remove the device from the test chamber and install in its container. (For Store and Transport, See B4.3) | |

FUNCTION B3.3.1

| ASSEMBLY OR CHECKOUT FUNCTION AND TECHNICAL REQUIREMENTS | RECOMMENDED EQUIPMENT OR DOCUMENT |
|---|---|
| 4.0 STORE AND TRANSPORT - MISSILE COMPONENTS AND DELIVERED OGE/MGE<br>The requirement exists to store and transport missile components and delivered OGE/MGE after completion of B2.0 or B3.0 until they are issued and delivered to the receiving area in the MAB. | |
| 4.1 STORE AND TRANSPORT - NON-ORDNANCE AND DELIVERED OGE/MGE<br>Transportation, handling and storage procedures are required. | D2-13907 Transportation Handling Procedures Plant 77 |
| 4.1.1 PREPARE FOR STROAGE | |
| A. The G&C Section installed on the H4 Autonavigator Handling Ring shall be removed from the test fixture and sealed in the shipping container. (NOTE: G&C Section covers shall be checked in place prior to sealing container. | Hoisting Sling & Cover, H6A (ACO 0608)<br>EM-2084 (O&M) Fixture, Test - Facilities (ACO 0565)<br>Hoist Portable (ACO 405)<br>Sling - G&C Section Container Cover (ACO 468) |
| B. The NCU's (Stages I, II and III) installed on their respective adapter frames, shall be removed from their trailers and repacked in their containers. | Nozzle Control Unit Sling (H9) (FSE 610) |

FUNCTION B4.0 STORE AND TRANSPORT - MISSILE COMPONENTS AND DELIVERED OGE/MGE

| ASSEMBLY OR CHECKOUT FUNCTION AND TECHNICAL REQUIREMENTS | RECOMMENDED EQUIPMENT OR DOCUMENT |
|---|---|
| 4.1.1 PREPARE FOR STORAGE (CONT) | |
| C. The Angular Accelerometer shall be placed in its container and resealed. | |
| D. The Battery Packages shall be placed in their respective containers for storage until required for installation in function B3.1.1.11 in CPA. | |
| 4.1.2 TRANSPORT TO STORES | |
| The functionally tested components shall be transported from the CPA to the storage building. (Utilize the rocket motor transporter (FSE 101) when outside environment exceeds specification limits.) | Truck, Motor-Misc. Delivery (ACO 452 )<br>Truck, Lift - Fork (ACO 453 )<br>Rocket Motor Transporter (FSE 101) |
| 4.1.3 STORAGE AND PARTS CONTROLS | |
| The missile components and delivered OGE/MGE shall be assigned to storage locations and control records shall be processed. | Shelving, Storage (ACO 462) |
| 4.1.4 TRANSPORT TO ASSEMBLY AREA | |
| Missile Components and delivered OGE/MGE shall be transported to the CPA or MAB for installation as required. | |
| 4.2 STORE AND TRANSPORT - ROCKET MOTORS | |
| Transportation, handling and storage procedures are required and shall be in accordance with the appropriate motor manufacturer's procedures and Document D2-12812. | D2-11777 Transportation, and Handling Procedures, Rocket Motor (Stage III)<br>D2-12216<br>D2-12369<br>D2-13907 |

FUNCTION B4.1.1

| ASSEMBLY OR CHECKOUT FUNCTION AND TECHNICAL REQUIREMENTS | RECOMMENDED EQUIPMENT OR DOCUMENT |
|---|---|
| 4.2.1 PREPARE FOR TRANSFER TO SSCBM | |
| The requirement exists to transfer rocket motors singly or in sets from the Motor Storage Building to the SSCBM for transport to the MAB. The storage rail winch will provide restraint during the transfer of motors in train. Provisions shall be made to insure against exposure of the rocket motors to environment exceeding the specified limits. | Rails, Storage-Engine and Missile (FSE 7629) D2-10907 (O&M) Shelter, Missile and Motor, Environmental, M/MSB (FSE 7687) D2-10996 (O&M) |
| Other equipment is required to provide the following: | |
| a. A means to receive, house, support, provide transfer and transport power, and provide environmental control to rocket mtors singly and in sets, (Stage I, II and III). | Shipping and Storage Container, Ballistic Missile (MGE 4095) D2-13907 Trailer, Ballistic Missile (MGE 4129) Tractor (MGE 4130) Skis, SSCBM (MGE 4493) Air Conditioner (MGE 4115) |
| b. A means to support and align the aft end of the Ballistic Missile Trailer in position for roll transfer. | Jack Set, Translating (ACO 4175) |
| c. A means to provide illumination for night transfer. | Lamp, Incandescent Portable Flood (ACO 4425) Cable, Assembly, Power Electrical, Flood Lamps (ACO 449) |
| d. A means to electrically bond the 1st, 2nd, and 3rd Stage Rocket Motor Carriages together to prevent an electrical potential difference between Rocket Motors during roll transfer in train. | Cable, Rocket Motor Bonding (ACO 253) |
| | FUNCTION B4.2.1 |

| ASSEMBLY OR CHECKOUT FUNCTION AND TECHNICAL REQUIREMENTS | RECOMMENDED EQUIPMENT OR DOCUMENT |
|---|---|
| 4.2.1 PREPARE FOR TRANSFER TO SSCBM (CONT) | |
| E. A means to connect the rail system in the storage building to the rail system in the SSCBM. This connection must be of adequate strength to support any stage rocket motor. | Rail Assembly, Bridge, Engine Transfer (FSE 7756) |
| F. A means to provide trailer electrical grounding during transfer operations. | Lead, Electrical Grounding (ACO 352) |
| G. A means to connect the following for transfer of rocket motors singly and in sets. | Control-Winch M&B-Storage Bunker (FSE 7688) |
| 1. Ballistic Missile Trailer winch cable to Stage I Stage II, and Stage III Rocket Motor Carriages. | Bridle-Rocket Motor Stage I (FSE 7689) D2-10933 (O&M) |
| 2. Stage I carriage to Stage II carriage. | Bridle-Rocket Motor Stage III (FSE 7690) D2-10939 (O&M) |
| 3. Stage II carriage to Stage III carriage. | Positioning Set, Rocket Motor Carriage (FSE 7691) D2-9555 (OPR) |
| 4.2.2 TRANSFER ROCKET MOTORS TO SSCBM | |
| Roll transfer the rocket motors from the storage bldg. into the SSCBM, using the Ballistic Missile Trailer winch for propulsion and the storage rail winch for restraint, when motors are tranfered in train and secure for transportation. All transfer equipment except the positioning set, and Ballistic Missile Trailer winch cable shall be removed and stowed or returned to dispatcher. | Tie-Down, Rocket Motor Carriage to SSCBM (part of SSCBM) R |

FUNCTION B4.2.1

| ASSEMBLY OR CHECKOUT FUNCTION AND TECHNICAL REQUIREMENTS | RECOMMENDED EQUIPMENT OR DOCUMENT |
|---|---|
| 4.2.3 TRANSPORT ROCKET MOTORS TO MAB | |
| 4.2.4 PREPARE FOR ROCKET MOTOR TRANSFER TO MAB | |
| Position SSCBM at MAB by leveling and aligning to the Missile Joining Rails and utilizing the transfer equipment previously described in B4.2.1. | Equipment required same as in B4.2.1 except storage rails & Missile/Motor Bldg. Shelter. R |
| The Missile Joining Rails are required to suppert Rocket Motors on carriages in the MAB and to provide a means for roll transfer of rocket motors singly and in sets. These rails are positioned to match the transfer equipment and shall include a grounding cable for rocket motor transfer, a power winch and necessary sheaves, wheel blocks to prevent movement of motors and provisions for grounding rocket motor carriages and for receiving transfer bridge rails. | Rails, Missile Joining (FSE 7628) D2-10901 (O&M) |
| Provisions shall be made to insure against exposure of the rocket motors to environment exceeding the specified limits. | Shelter, Missile & Motor Transfer-Environmental-MAB (FSE 7682) D2-10993 (O&M) R |
| 4.2.5 TRANSFER ROCKET MOTORS TO MAB | |
| Roll transfer the rocket motors from the SSCBM onto the MAB Missile Joining Rails using the MAB Rails winch for propulsion; when transfering motors in train, the Ballistic Missile Trailer winch will be used for restraint. After the rocket motors are positoned, the horizontal restraint rings shall be removed. Rocket Motor containment devices shall be installed as specified in Document D2-14380. | Sling-Horizontal Restraint Ring, Engine (FSE 7632) D2-11012 (O&M) R<br>Hoist, Overhead, Rail Type (Facility) R |
| | FUNCTION B4.2.3 |

| ASSEMBLY OR CHECKOUT FUNCTION AND TECHNICAL REQUIREMENTS | RECOMMENDED EQUIPMENT OR DOCUMENT |
|---|---|
| 4.2.5 TRANSFER ROCKET MOTORS TO MAB (CONT) | |
| An alarm system will indicate when environmental conditions in this assembly area are out of tolerance. The requirements for environments in the MAB assembly area are 80 ± 20°F with a dewpoint of 57°F maximum. | D2-9555 |
| 4.3 TRANSPORT AND STORE ORDNANCE DEVICES | |
| The spare ordnance device shall be transferred to the squib and ignitor storage buildings for storage after receiving and inspection and testing. | Shelving, Storage (ACO 462)<br>Truck, Motor-Misc. Delivery (ACO 452) |
| 4.4 ROCKET MOTOR TRANSFER (ALTERNATE METHOD) | |
| In the event that the SSCBM is not available to transport rocket motors between the Motor and Missile Storage Building and the Missile Assembly Building, rocket motors will be transported singly in the Rocket Motor Semi-Trailer. Equipment and procedures to transfer single rocket motors from the Motor and Missile Storage Building to these trucks are essentially the same as those presented in B2.2 with the following additions: | |
| A. A means is required to receive, support, transport and provide environmental control to individual rocket motors supported on carriages. | Semitrailer, Rocket Motor (FSE 101)<br>D2-12974 (O&M) |
| B. A means to support and propel the Rocket Motor Semitrailer. | Truck, Tractor, Rocket Motor (GFP) |
| NOTE: No alarm set is required. (See ground rule 14 page 10, this section.) | |

| ASSEMBLY OR CHECKOUT FUNCTION AND TECHNICAL REQUIREMENTS | RECOMMENDED EQUIPMENT OR DOCUMENT |
|---|---|
| 5.0 ROCKET MOTOR BUILDUP<br>The requirement exists to install the NCU's on the rocket motors. The positioning and securing of the rocket motors are described in B4.2.<br><br>Detailed installation procedures shall be per engineering drawings. | |
| 5.1 PREPARE NCU'S FOR INSTALLATION<br>Verify by S/N that the NCU to be installed has been adjusted to the requirements of the S/N rocket motor. (See B3.1.2) | Rails, Missile Joining (FSE 7628) D2-10901 (O+M)<br>Dolly, Positioning-Final Assembly (FSE 7708) D2-10927 (O+M) |
| The NCU's shall be removed from their containers and placed on a dolly that will roll on the missile joining rails to permit installation to the motors. An overhead hoist, capable of adjusting vertical position of an article within 1/8 inch, and a standard sling are required for lifting NCU container covers and NCU positioning dollies. A special sling with suitable adapters is required to hoist the NCU's. A device is required to spread and hold the Rocket Motor nozzles while installing NCU's on Stages I and II only. | Adapter, Joining-NCU' Stage I (FSE 7701) D2-10945, D2-10960 R<br>Adapter, Joining-NCU, Stage II (FSE 7702) D2-10937, D2-10964 R<br>Adapter, Joining-NCU, Stage III (FSE 7703) D2-10947 (O+M)<br>NCU (H9) Sling (FSE 610) EM-2084 (O+M)<br>Scaffolding-Missile Access (FSE 7630) D2-10903 (O+M)<br>Spreader Kit, Nozzle-Stage II (FSE 17) D2-12216 (OPR.)<br>Spreader Assy, Stage I Nozzles (FSE 114) |
| Stage III NCU amplifier shall be removed prior to NCU installation and reinstalled after NCU is bolted into place on the Stage III Rocket Motor. | Dolly Joining-Amplifier-NCU-Stage III (FSE 7684) (Model A only) D2-10922 (O+M) R |
| | FUNCTION B5.0 |

| ASSEMBLY OR CHECKOUT FUNCTION AND TECHNICAL REQUIREMENTS | RECOMMENDED EQUIPMENT OR DOCUMENT |
|---|---|
| 5.1 PREPARE NCU'S FOR INSTALLATION (CONT) | |
| | Hoist, Overhead Rail Type (Facility) R |
| | Sling, Standard Factory - 4 drop (ACO 454) |
| 5.2 INSTALL NCU's | |
| The NCU's shall be installed per Engineering Drawing. | Drawing 25-27597 25-27598 25-27599 |

FUNCTION B5.1

| ASSEMBLY OR CHECKOUT FUNCTION AND TECHNICAL REQUIREMENTS | RECOMMENDED EQUIPMENT OR DOCUMENT |
|---|---|
| 6.0 FUNCTIONAL TEST ROCKET MOTOR BUILDUP<br>The requirement exists to verify the installation of the NCU's to the rocket motors and verify that the electrical and mechanical nozzle zero positions coincide. (Ref. B3.1.2.)<br>Detailed test procedures are required and contained in Document D2-9520. | |
| 6.1 PREPARE FOR TEST<br>The NCU Zero Alignment Test Set is required for this test. The test set shall include a switch control to turn on Electronic and Hydraulic Power, and an adapter to short out the NCU Signal Receptacle for zero signal simulation, and shall be used in conjunction with the MAB Test Position and appropriate NCU Verification Gages and Check Plates. | Test Set, NCU Zero Alignment, MAB (FSE 7724)<br>Cable Assy, NCU Test MAB (FSE 7719)<br>Gage, NCU Verification, Stage I (FSE 10153)<br>Gage, NCU Verification, Stage III (FSE 10161)<br>Test Position, MAB (See B12.1) except ACO 0667 & ACO 9278.<br>Gage NCU, Verification Stage II (FSE 10157)<br>Test Adapter Cable, Stage I NCU, P70B (FSE 7748) |

| ASSEMBLY OR CHECKOUT FUNCTION AND TECHNICAL REQUIREMENTS | RECOMMENDED EQUIPMENT OR DOCUMENT |
|---|---|
| 6.2 PERFORM TEST<br>Zero alignment of the nozzle, as established by the motor associate contractor, shall be verified while electronic and hydraulic power and a zero signal is provided to the NCU. | D2-9520 Missile Functional Test Procedures<br>D2-12977 (O&M for Fig. A 7724) |
| 6.3 DISCONNECT TEST EQUIPMENT | |

| ASSEMBLY OR CHECKOUT FUNCTION AND TECHNICAL REQUIREMENTS | RECOMMENDED EQUIPMENT OR DOCUMENT |
|---|---|
| 7.0 PRE-ASSEMBLE MISSILE LESS G&C SECTION | |
| The requirement exists to attain the configuration necessary to perform the Ordnance Safing and Arming Circuit Test per B8.0. Detailed assembly procedures shall be per Engineering Drawings and Documents. | |
| NOTE: Mechanical interface discrepancies will be isolated to the discrepant component utilizing the Fault Isolation Tool Set (FSE 7746). | Fault Isolation Tooling Set (FSE 7746) D2-10994 (O&M) R |
| 7.1 POSITION RACEWAY CABLES | |
| The Raceway Cables shall be hand-carried from their containers and manually placed loosely into position on their respective motors. The cables shall not be connected at this time. | Drawing 25-27524<br>Rails-Missile Joining(FSE 7628) D2-10901 (O&M)<br>Scaffolding-Missile Access (FSE 7630) D2-10903 (O&M) |
| 7.2 INSTALL HEAT SHIELDS | |
| The following items shall be installed per drawing:<br>A. Deflector Assembly - Base Heating, Stage I<br>B. Deflector Assembly - Base Heating, Stage II<br>C. Deflector Assembly - Base Heating, Stage III | Engineering Drawings:<br>25-25879<br>25-25880<br>25-25881 |
| 7.3 INSTALL STAGE I SKIRT | |
| The skirt shall beiinstalled per Engineering Drawing through the point of finger tightening of the motors-to-skirt attaching bolts. | Engineering Drawing 25-27208<br>Dolly, Joining-Skirt to Engine (FSE 7709) D2-10931 (O&M) R |
| Equipment to hoist, position, assemble and install the skirt shall be required. | Sling & Harness-Engine Skirt (FSE 7636) D2-10974 (O&M) |
| Remove the joining dolly from the missile joining rails | ~~Fixture, Pressure Missile Arm (FSE 7620)~~ |

| ASSEMBLY OR CHECKOUT FUNCTION AND TECHNICAL REQUIREMENTS | RECOMMENDED EQUIPMENT OR DOCUMENT |
|---|---|
| 7.3 INSTALL STAGE I SKIRT (CONT) | |
| upon installation of the skirt. | D2-10961 O&M |
| 7.4 PREPARE FOR JOINING ROCKET MOTORS | |
| Position the necessary equipment (joining dollies, etc.) for interstage installation. | Hoist Overhead, Rail Type (Facility)<br>Sling, Standard Factory-4 drop (ACO 454) |
| 7.4.2 INSTALL INTERSTAGE I - II | |
| Remove the upper section of the interstage container and disassemble the interstage for installation. Install the R. H. Aft Section (including Aft Motor Adapter) to stage I motor and forward motor adapter (which is installed in two sections) to the stage II motor with fasteners finger tight. A circular adapter fixture is attached fo the R. H. aft panel and adapter ring to accomplish this installation. Move the forward motor in to position for remainder of interstage installation. Assemble the raceway cable support frame to the forward adapter and heat deflector support structure. | D2-10927 O&M<br>D2-10929 O&M<br>Dolly, Positioning-Final Assembly (FSE 7708)<br>D2-10927 O&M<br>Adapter, Joining Missile Interstage I-II (FSE 7613)<br>D2-10929 O&M<br>Hoist, Lever (ACO 450)<br>Drawing 25-27202<br>25-27221<br>Harness, L. H. Panel, Missile Interstage I-II (FSE 7642)<br>D2-10994 (O&M)<br>Harness, R. H. Panel, Missile Interstage I-II (FSE 7641)<br>D2-10949 (O&M) |

FUNCTION B7.3

| ASSEMBLY OR CHECKOUT FUNCTION AND TECHNICAL REQUIREMENTS | RECOMMENDED EQUIPMENT OR DOCUMENT |
|---|---|
| 7.4.2.1 INSTALL INTERSTAGE I-II ARM-DISARM DEVICE | |
| Install the stage separation arm-disarm device on the pad provided on the right-hand aft section of the interstage. | Drawing 25-27238 |
| 7.4.2 INSTALL INTERSTAGE II-III | |
| The requirements are the same as B7.4.2. | Drawing 25-27205<br>25-27227 |
| | Harness, L. H. Panel Missile Interstage II -III (FSE 7731)<br>D2-11072 (O&M)<br>Harness, R. H. Panel Missile Interstage II-III (FSE 7730)<br>D2-11074 (O&M)<br>Hoist, Lever (AC0450) |
| 7.4.2.1 INSTALL INTERSTAGE II-III ARM-DISARM DEVICE | |
| The requirements are the same as B7.4.1.1. | Drawing 25-27238 |
| 7.5 INSTALL ACCELEROMETER | |
| Install the accelerometer on the equipment support rack in the Stage II-III Interstage. | Drawing 25-27617 |

| ASSEMBLY OR CHECKOUT FUNCTION AND TECHNICAL REQUIREMENTS | RECOMMENDED EQUIPMENT OR DOCUMENT |
|---|---|
| 7.6 RACEWAY CABLE DIELECTRIC TEST<br>The raceway cables shall be tested for dielectric integrity between each of the squib and arming wires and all other wires and shields. Procedures are required to perform this test. | |
| 7.6.1 PREPARE FOR TEST<br>Connect the raceway cables to each other. No connections shall be made to airborne components. | |
| A spanner wrench shall be required to complete the connections. | Drawing 25-27524 |
| 7.6.2 PERFORM TEST<br>The test shall be accomplished by connecting the adapter cables to the appropriate raceway connectors and manually programming through the test sequence. | Test Set and Adapter Cables, Raceway Cables (Fig. A 7696)<br>D2-14116 R<br>Raceway Cable Test Procedures - MAB |
| 7.6.3 DISCONNECT TEST EQUIPMENT | |
| 7.7 CONNECT RACEWAY CABLES TO AIRBORNE COMPONENTS<br>Connect the raceway cables to all airborne components <u>except</u> to the motor, stage separation, and thrust termination ordnance devices and G&C Section. | Drawing 25-27524 |

| ASSEMBLY OR CHECKOUT FUNCTION AND TECHNICAL REQUIREMENTS | RECOMMENDED EQUIPMENT OR DOCUMENT |
|---|---|
| 8.0 TEST, ORDNANCE ARM-DISARM CIRCUIT<br>The motor Safe and Arm, Interstage Arm-Disarm and third stage arming and disarming circuits shall be tested to verify that the connections have been accomplished.<br><br>Detailed test procedures are required and are contained in D2-13445. | |
| 8.1 PREPARE FOR TEST<br>The missile test position defined in B10.0 is required. This test shall be performed; (1) with the missile cables connected to the Ordnance Cable Test Boxes in place of the Safe & Arm and Arm-Disarm devices and (2) with the missile cables connected to the Safe & Arm and Arm-Disarm devices. A "no voltage" check of the NCU umbilical shall be made prior to connecting the NCU umbilical to the missile and a "no voltage" check of the raceway cabling shall be made prior to connecting any raceway cabling to airborne ordnance devices. | Missile Test Position (See B10.1) R<br>Adapter, Spanner Wrench (ACO 3119)<br>Test Set Assy Ordnance Circuit (FSE 7679) |
| The configuration for test will be a missile completely assembled with the following exceptions:<br>A. L. H. Interstage and Forward Interstage Panels not installed.<br>B. Raceway Covers and Caps not installed.<br>C. Stage Separation Detonators and Linear Charges not installed.<br>D. Motor Ignition Safe and Arm Devices not connected to the raceway cable. (These connections shall be made as a part of the test.) | D2-13445 Ordnance Component and Subsystem Test Procedures |
| | FUNCTION B8.0 |

| ASSEMBLY OR CHECKOUT FUNCTION AND TECHNICAL REQUIREMENTS | RECOMMENDED EQUIPMENT OR DOCUMENT |
|---|---|
| 8.1 PREPARE FOR TEST (CONT'D) | |
| E. Interstage Adapter Rings installed with fasteners finger tight. | |
| F. Interstage Arm-Disarm and Third Stage Thrust Termination Arm-Disarm Devices not connected. (These connections shall be made as a part of the test.) | |
| G. Safing Pins installed in all S&A and Arm-Disarm devices. (6 places.) | |
| H. G&C Section not installed. | |
| 8.2 PERFORM TEST | |
| The test shall be accomplished in two parts. | |
| Part 1 shall consist of a measurement of the resistance of each Safe and Arm and Arm-Disarm arming and safing circuit and a determination that the Safe and Arm Monitor Circuits are properly made. This resistance measurement shall be made using the Ordnance Circuit Test Set Assembly with the Ordnance Cable Test Box connected in the place of the airborne component; the Safe and Arm monitoring circuits continuity shall be indicated on the Missile Checkout Console (FSE 7723). | D2-13445 Ordnance Component and Subsystem Test Procedures<br>Missile Test Position (See B1.1) R<br>Box, Test, Ordnance Cable (FSE 7740)<br>Test Set Assembly, Ordnance Circuit (FSE 7679) |
| Part 2 shall consist of resistance measurements using the Ordnance Circuit Test Set Assembly to determine if the arming circuits of the airborne components are completed when the raceway cable connectors are connected to the devices. The Safe and Arm Monitoring circuits continuity shall be indicated on FSE 7723, Missile Checkout Console. | |
| 8.3 DISCONNECT TEST EQUIPMENT | FUNCTION B8.1 |

| ASSEMBLY OR CHECKOUT FUNCTION AND TECHNICAL REQUIREMENTS | RECOMMENDED EQUIPMENT OR DOCUMENT |
|---|---|
| 9.0 INSTALL G&C SECTION | |
| The G&C section must be positioned to allow connection of raceway cabling and finger tight installation of bolts. | |
| NOTE: Mechanical interface discrepancies will be isolated to the discrepant component utilizing the Fault Isolation Tool Set (FSE 7746). | Fault Isolation Tooling Set (FSE 7746) D2-10944 (O&M) |
| 9.1 PREPARE FOR INSTALLATION OF G&C SECTION | |
| Installation preparations include: | |
| A. Removing the upper section of the G&C section container. | Hoist, Overhead Rail Type (Facility) |
| B. Lifting the G&C Section including the G&C End Cover, Support Ring, Window Protective Cover and Umbilical Dust Cover from the lower section of the container and placing on the Positioning Dolly. | Sling, Standard Factory-4 drop (ACO 454) Sling and Harness G&C Section (FSE 7634) D2-10990 (O&M) |
| C. Placing the positioning dolly on the Missile Joining rails, and removing the G&C section support ring. | Dolly, Positioning G&C Section (FSE 7707) D2-10935 (O&M) Drawing 25-27596 |
| NOTE: (1) The Window Protective Cover will not be removed, and the Umbilical Cover will be removed immediately prior to insertion of the G&C Umbilical Cable and reinstalled immediately after umbilical removal. | |
| 9.2 PERFORM INSTALLATION OF G&C SECTION | |
| Position the G&C section, connect the raceway cabling, remove the raceway cabling connection "T" handle (similiar to Autonetics part 200X-375-55) and install the interface bolts finger tight. Remove the positioning dolly. | |

FUNCTION B11.0 COMPLETE MISSILE ASSEMBLY

| ASSEMBLY OR CHECKOUT FUNCTION AND TECHNICAL REQUIREMENTS | RECOMMENDED EQUIPMENT OR DOCUMENT |
|---|---|
| 11.0 Complete Missile Assembly | |
| Complete assembly of the missile per engineering drawings and documents. | Fault Isolation Tooling Set (FSE 7746) |
| NOTE: Mechanical interface discrepancies will be isolated to the discrepant component utilizing the Fault Isolation Tool Set (FSE 7746). | D2-9555<br>D2-10944 O&M |
| 11.1 INSTALL SKIRT REMOVAL DETONATORS AND SAFE AND ARM DEVICES | |
| The skirt removal safe and arm devices and detonators shall be installed to the L.H. interstage panels. | Dwg. 25-27238 |
| 11.2 CLAMP AND SECURE CABLING | |
| All internal cabling shall be secured. | Dwg. 25-27524 |
| 11.3 INSTALL INTERSTAGE R.H. FORWARD AND L.H. PANELS | |
| The right hand forward panels of each interstage shall be installed; then the left hand panels with the skirt removal detonators shall be installed. | Harness, Missile-Interstage I-II R.H. Panel (FSE 7641)<br>D2-10949 (O&M)<br>Harness, Missile Interstage II-III Right Hand Panel (FSE 7730)<br>D2-11074 (O&M)<br>Harness, Missile Interstage II-III L.H. Panel (FSE 7731)<br>D2-11072 (O&M)<br>Harness, Missile Interstage I-II L.H. Panel (FSE 7642) R<br>D2-10994 (O&M) R |
| NOTE: Prior to installation of R.H. forward panels, ensure that Stage II and Stage III nozzle covers are removed. | |
| 11.4 INSTALL ORDNANCE SAFETY-PIN LANYARDS AND STREAMERS | |
| The red streamers with lanyards shall be installed to indicate the presence of ordnance safety pins. (See D2-9133) | D2-9133 |
| 11.5 INSTALL AND TORQUE STRUCTURAL FASTENERS | Drawings<br>21-50150 25-27202<br>21-51750 25-27205<br>21-51725 25-27208<br>25-27396 |
| Torque bolts and check bolt installation. Detail Procedures will be contained on the Engineering Drawings | |
| | FUNCTION B11.0 |

| ASSEMBLY OR CHECKOUT FUNCTION AND TECHNICAL REQUIREMENTS | RECOMMENDED EQUIPMENT OR DOCUMENT |
|---|---|
| 11.6 **INSTALL RACEWAY COVERS AND CAPS** | |
| Install covers and caps per Engineering Drawing. | Drawing 25-27211 |
| 11.7 **INSTALL MISSILE BASE SUPPORT ADAPTER RING AND CLAMPS** | |
| Install Missile Support Adapter Ring (OGE 1252) and Clamps (MGE 4069) per Engineering Drawing. | Sling-Adapter Ring, Missile Base (FSE 7631)<br>D2-11011 O&M<br>Drawing 25-19176 |
| 11.8 **INSTALL ORDNANCE DEVICES** | Drawing 25-27238 |

| ASSEMBLY OR CHECKOUT FUNCTION AND TECHNICAL REQUIREMENTS | RECOMMENDED EQUIPMENT OR DOCUMENT |
|---|---|
| 1.1.8.1 INSTALL STAGE SEPARATION AND SKIRT REMOVAL LINEAR CHARGES | |
| The ordnance installation kit will include the necessary equipment for installing the linear charges in the groove in the interstages. | Installation Kit, Linear Explosive (FSE 7648)<br>D2-11004 (O&M) |
| 11.8.2 INSTALL STAGE SEPARATION DETONATORS | |
| 11.9 INSTALL CLOSEOUT AND ACCESS PANELS | |
| Verify that safing pins are installed and all streamers are visible. | |
| 11.10 SEAL AND FAIR MISSILE | |
| Install insulation caps and complete any sealing and/or smoothing operations necessary as specified on engineering drawings. Perform any finish (AVCOAT) repair required (within specified limits on drawings) per D2-7295. | Kit, Ablative Mat'l Repair (FSE 7665)<br>D2-11087 (O&M)<br>D2-7295, AVCOAT Repair Procedures |
| NOTE: The weight of materials added to the missile shall be measured and the location of application recorded on a weight and balance form. When missile sealing is completed, the form or forms shall be forwarded to the Weights Group. | Scale, Weighing (Facilities)<br>Drawing 25-27212 |

| ASSEMBLY OR CHECKOUT FUNCTION AND TECHNICAL REQUIREMENTS | RECOMMENDED EQUIPMENT OR DOCUMENT |
|---|---|
| 12.0 PERFORM MISSILE ACCEPTANCE & FUNCTIONAL TESTS | |
| Testing is required to verify that the final assembly operation has not affected system performance. This testing shall include verification of (1) all subsystems that could have been affected by the assembly operation, (2) all sub-systems which depend upon an interface relationship which is not completed until missile assembly, and (3) the battery and First Stage ignition squib circuit test. Detailed test procedures are required and shall be covered in Document D2-9520. | D2-9520 SM-80 Functional Test Procedures |
| 12.1 CONNECT TEST EQUIPMENT | |
| The Test Control Room, as shown in Figure 7-B and the Test Position, as shown in Figure 9-B are required. A no voltage check of the test umbilicals shall be accomplished prior to connection to the missile G&C section and skirt umbilical connectors. A Re-Entry Vehicle Dummy Load shall be connected to the G&C section. | Adapter, Spanner Wrench (ACO 3119) Dummy Load, Re-Entry Vehicle (FSE 7722) Test Set Assembly Ordnance Circuit (FSE 7679) D2-13445 |
| MISSILE TEST POSITION | |
| Console, Missile Checkout (FSE 7723) | Missile Test Position (See left) D2-10825-104 . (O&M) |
| Liquid cooling equipment, Ground Guidance & Control (ACO 9278) | |
| Power Supply, D.C. Portable C-95 (ACO 0667) | EM-2386 (O&M) |
| Power Supply Group, MAB (FSE 7717) | |
| Junction Box Auxiliary, MAB (FSE 7739) | |
| Junction Box, Test, MAB (FSE 7721) | FUNCTION B12.0 |

| ASSEMBLY OR CHECKOUT FUNCTION AND TECHNICAL REQUIREMENTS | RECOMMENDED EQUIPMENT OR DOCUMENT |
|---|---|
| 12.1 Continued | |
| Cable Assemblies, Equipment, Interconnecting, MAB (FSE 7718) | |
| Cable Assemblies, Umbilical, MAB (FSE 7720) | |
| Fixture, Support - Umbilical Cooling, MAB (FSE 7619) | D2-10905 (O&M) |
| 12.2 PERFORM MISSILE TESTS | |
| The G&C Test Program shall have been filled into the cold storage of the G&C Computer during the functional testing. The initiation of start-up, shut-down and G&C tests shall be manually controlled from the missile checkout console. The G&C Computer shall control and evaluate these tests. The test results shall be transmitted to the missile checkout console for automatic printout. Manually controlled tests shall be conducted to verify continuity of Stage I motor ignition circuitry, Stage I, II and III battery activation circuits, and umbilical dead-facing activation circuits. | D2-12401 (O&M for FSE 7723) |
| 12.3 DISCONNECT TEST EQUIPMENT | |
| Remove test power from the test console, disconnect the R/V Dummy Load and test umbilical. | D2-13764 Purging & Drying Procedures |
| Purge the G&C Section of coolant by draining, then drying with dry air per D2-13764 prior to removing G&C umbilical. | Purging & Drying Kit (ACO 466) |
| NOTE: Install the umbilical dust cover immediately upon umbilical cable disconnect from the G&C Section. | Thiokol Drawing, Nozzle Shipping Link, Instl. (8U34528) |
| Shipping Links are required on the 1st Stage Rocket Motor Nozzles during missile transporting and handling. Install Nozzle support Link Kit (MXE 11306) per Engineering Drawing. | |

FUNCTION B12.0

| ASSEMBLY OR CHECKOUT FUNCTION AND TECHNICAL REQUIREMENTS | RECOMMENDED EQUIPMENT OR DOCUMENT |
|---|---|
| 13.0 MISSILE HANDLING FOR SHIPMENT | |
| The requirement exists for handling a completed missile by transferring, transporting, storing (as required) and loading for shipment at, or between, the various facilities at A/F Plant 77. | |
| Detailed procedures for storing, transferring, transporting and environmental protection of the missile are required and shall be covered in Document D2-13907. | |
| Operating procedures for the SSCBM, Ballistic Missile Trailer, Tractor, and the Air Conditioner shall be covered in Document D2-13907. | |
| The completed missile shall be transferred, by SSCBM, from the MAB to the Missile Storage Igloo, Missile Transient Storage Area or Airplane/Rail Loading Areas as required. All missile transfers will be accomplished by the motor and missile handling crew who will be dispatched through the material handling dispatcher. | |
| Environmental protection of missiles during transfer operations under adverse weather conditions, is required in order to maintain missile environmental control within allowable tolerances. | |
| NOTE: Rocket Motor Restraint Device shall be removed prior to missile loading for delivery. | D2-14380 (Instl.) |
| | FUNCTION B13.0 |

| ASSEMBLY OR CHECKOUT FUNCTION AND TECHNICAL REQUIREMENTS | RECOMMENDED EQUIPMENT OR DOCUMENT |
|---|---|
| B13.1 PREPARE FOR MISSILE TRANSFER ROLL FROM MAB | |
| Preparation for roll transfer involves preparing the transfer area, positioning the Ballistic Missile Trailer, removing Tractor, installing translating and alignment equipment, securing SSCBM to MAB Rails and providing for adverse weather conditions, as required. In addition, this function includes rigging and installing transfer equipment. (See Figure 17-B). The following is required: | D2-13907, Missile Handling and Transporting<br>Shelter, Missile and Motor Transfer-Environmental-MAB (FSE 7682)<br>D2-10993 (O&M) R |
| A. A means to support the missile on the Rocket Motor Carriages and provide for missile roll transfer. These rails shall include a permanently installed electric winch, a grounding cable for missile transfer, snatch block for use with transfer cables, wheel blocks to prevent movement of missile, and provisions for grounding rocket motor carriages, for joining to SSCBM Rails and for mounting of alignment equipment. | Rails-Missile Joining (FSE 7628)<br>D2-10901 (O&M) |
| B. A means to provide electrical bonding between carriages during transfer is required. | Cable, Rocket Motor Bonding (ACO 253) |

| ASSEMBLY OR CHECKOUT FUNCTION AND TECHNICAL REQUIREMENTS | RECOMMENDED EQUIPMENT OR DOCUMENT |
|---|---|
| B13.1 PREPARE FOR MISSILE TRANSFER ROLL FROM MAB (CONT) | |
| C. A means to connect trailer transfer cables and fixed winch cables to the Missile Support Adapter Ring for missile transfer. | Clamp Assy, Missile Transfer (FSE 7686) |
| D. A means to support and align (dimensionally three ways) the Ballistic Missile Trailer to the Missile Joining Rails, for missile transfer to the SSCBM. | Jack, Translating (ACO 4175)<br>Alignment Set, Missile Transfer (ACO 4375) |
| E. A means to check alignment of SSCBM Rails to Missile Joining Rails preparatory to roll transfer. The rails must be aligned within specific limits to insure against imposing excessive loads on the missile during transfer. | Tool Set, Optical, Missile Transfer (ACO 381) |
| F. A means to provide conditioned air for control of temperature and humidity in the SSCBM; and a display to alert personnel when a signal is received from the transport monitor indicating the environment has exceeded specific limits. | Air Conditioner (MGE 4115) |
| G. A means to discharge static electricity by grounding SSCBM to trailer and trailer to Ground terminal. | Lead, Electrical Grounding (ACO 352) |

| ASSEMBLY OR CHECKOUT FUNCTION AND TECHNICAL REQUIREMENTS | RECOMMENDED EQUIPMENT OR DOCUMENT |
|---|---|
| 13.1 PREPARE FOR MISSILE TRANSFER ROLL FROM MAB (CONT) | |
| E. A means in which the missile, on its rocket motor carriages will be environmentally protected and supported in a container which is capable of: | Shipping and Storage Container, Ballistic Missile (MGE 4095) D2-12789 (OPER) R |
| 1. Being supported by trailer during missile transfers, transient storage and transportation. | R |
| 2. Receiving and discharging a missile from the aft end. | |
| 3. Restraining the rocket motor carriages against vertical and side movement during transportation operations. | |
| 4. Receiving grounding leads from rocket motor carriages and trailer. | |
| 5. Accepting conditioned air from the air conditioner. | |
| 6. Receiving electrical power for Alarm Set (MGE 4187) | |
| 7. Providing junctions for connecting the Alarm Set (MGE 4187) to the air conditioner panel. | |
| H. A means for supporting and transporting SSCEM ( with or without missile) which is capable of: | Trailer, Ballistic Missile (MGE 4129) |
| 1. Receiving the supporting and translating equipment used during transfer operations. | R |
| 2. Allowing SSCEM transfer from one end. | |
| 3. Receiving tractor. | |
| 4. Receiving grounding leads. | |

FUNCTION B13.1

| ASSEMBLY OR CHECKOUT FUNCTION AND TECHNICAL REQUIREMENTS | RECOMMENDED EQUIPMENT OR DOCUMENT |
|---|---|
| 13.1 PREPARE FOR MISSILE TRANSFER ROLL FROM MAB (CONT) | |
| 5. Securing SSCBM and Air Conditioner. | |
| 6. Providing the means for Missile and SSCBM transferring. (power winches, cables, and pulleys.) | |
| 7. Receiving SSCBM Skis. | |
| J. A means for pulling and positioning Ballistic Missile Trailer during transfer and transportation operations which shall have provisions for the installation of the alarm set. | Tractor, (MGE 4130) |
| K. A means for providing electrical grounding and power in the MAB transfer area which shall include the following: | Cable Assembly-Power Electrical, SSCBM Trailer Winch (ACO ) |
| 1. Electrical outlets for trailer power winches, and portable flood lamps. | Cable Assembly-Power Electrical, Portable Flood Lamps (ACO 449) Lamps, Incandescent Portable Flood (ACO 4425) |
| 2. Grounding terminals for trailer electrical grounding leads. | |
| L. A means to support the SSCBM on the trailer. NOTE: This item must be compatible with the aircraft loading system for the C133 Aircraft. | Skis, SSCBM (MGE 4493) |
| M. A means to control the fixed winches on the MAB assembly rails or igloo storage rails when the portable transfer winch is not being used with the fixed winch. | Control-Winch, MAB & Storage Bunker (FSE 7688) D2-10925 (O&M) |

FUNCTION B13.1

| ASSEMBLY OR CHECKOUT FUNCTION AND TECHNICAL REQUIREMENTS | RECOMMENDED EQUIPMENT OR DOCUMENT |
|---|---|
| B13.2 TRANSFER MISSILE TO SSCBM | |
| Roll transfer shall be accomplished by using Ballistic Missile Trailer winches as the power source. This operation also includes securing the missile on its rocket motor carriages to the SSCBM by the tie-downs and restraint adapter, connecting grounding jumpers, removing transfer cables, clamp assembly, and translating jacks; connecting tractor to trailer; operating air conditioner and when required, connect the alarm set in the SSCBM. | For installed equipment see B13.1 except Alignment Set |
| NOTE: The alarm set is not required for missile transfer from the MAB to Missile Storage Building. | Recorder, Temperature Portable (ACO 532) R |
| A means to secure missile in longitudinal direction inside SSCBM is required. | Adapter Restraint, Base Adapter Ring to SSCBM (Part of SSCBM) |
| 13.3 TRANSPORT TO MISSILE STORAGE, SSCBM TRANSIENT STORAGE, OR RAIL LOADING AREA | |
| Transport the missile by SSCBM, following a pre-determined route to the designated area. | |
| The air conditioner and Alarm Set (MGE4187) if installed, must be operating and monitored. | |

| ASSEMBLY OR CHECKOUT FUNCTION AND TECHNICAL REQUIREMENTS | RECOMMENDED EQUIPMENT OR DOCUMENT |
|---|---|
| 13.4 TRANSFER SSCBM TO AIRPLANE<br>The SSCBM transfer to C-133B airplane will be directed and accomplished by the Air Force. Boeing will deliver the SSCBM to the Aircraft Transfer Area. | |
| 13.5 TRANSFER SSCBM ON BALLISTIC MISSILE TRAILER TO RAIL CAR<br>The Ballistic Missile Trailer with a loaded SSCBM shall be transferred to a rail car. The tractor will be used to back the loaded trailer up the loading dock onto the rail car. | D2-13907 Transportation and Handling Procedures, Plant 77 |
| The air conditioner will provide missile conditioning in the SSCBM. | |
| The tractor will be returned to the dispatcher. | |
| The Rail Transfer Area will include the following provisions:<br>A. Loading dock to enable the Ballistic Missile Trailer to be driven onto the rail car.<br>B. Apron for servicing the special rail car. | |
| (NOTE: A means to lift the air conditioner from the rail car and place it on the ballistic missile trailer is required when an empty SSCBM is received on the rail car at A/F Plant 77) | Truck Lift Fork (Facility) (10,000 lb, MIN. Capacity) |

FUNCTION B13.5

| ASSEMBLY OR CHECKOUT FUNCTION AND TECHNICAL REQUIREMENTS | RECOMMENDED EQUIPMENT OR DOCUMENT |
|---|---|
| 13.5 TRANSFER SSCBM ON BALLISTIC MISSILE TRAILER TO RAIL CAR (Cont) | |
| The following equipment is also required: | |
| A means for transporting the SSCBM on commercial railroads which is capable of supporting and securing the loaded Ballistic Missile Trailer and providing the required shock mitigation for the railroad environment. | Rail Car, Special |
| A means to operate the rail car support for the Ballistic Missile Trailer fifth wheel. | Wrench, Portable Electric (ACO 4524) |
| A means to retain the special rail car in a desired location at the loading dock. | Stop, Railcar Wheel (ACO 4525) |

| ASSEMBLY OR CHECKOUT FUNCTION AND TECHNICAL REQUIREMENTS | RECOMMENDED EQUIPMENT OR DOCUMENT |
|---|---|
| 13.6 PREPARE FOR MISSILE TRANSFER TO STORAGE | |
| Preparation for missile transfer to storage involves verifying the environmental condition in the Missile Storage Building, positioning Ballistic Missile Trailer, removing tractor, installing electrical grounding leads, translating jacks and alignment equipment, connecting the SSCBM (on trailer) to storage rails, rig transfer equipment, installing trailer support jacks, removing SSCBM Restraint Adapter, rocket motor carriage tie-downs and grounding jumpers, disconnecting the Alarm Set, if installed, from the SSCBM junction box and providing for adverse weather conditions, as required. | NOTE: See B13.1 and B13.2 for equipment. Same equipment will be used here except for rails, Missile Joining and the MAB Environmental Shelter<br>D2-13907<br>Shelter, Missile and Motor, Transfer, Environmental Missile Motor Storage Bldg. (FSE 7687) D2-10996 (O&M) R |
| A. Rails are required to support the missile on rocket motor carriages in the Missile Storage Building and provide the means for missile roll transfer. Rails shall include permanently installed electric winches, a grounding cable for missile transfer, snatch block for use with transfer cables, wheel blocks to prevent movement of missile and have provisions for grounding of rocket motor carriages, joining to SSCBM rails and mounting of alignment targets. | Rails, Storage-Engine and Missile (FSE 7629) D2-10907 (O&M) |
| B. A means of recording temperature conditions in the Missile Storage Building is required. | Recorder, Temperature (Facilities) |
| A means of recording humidity in random Storage Bldgs is required to indicate representative humidity. | Recorder, Humidity (Facilities) R |
| | FUNCTION B13.6 |

| ASSEMBLY OR CHECKOUT FUNCTION AND TECHNICAL REQUIREMENTS | RECOMMENDED EQUIPMENT OR DOCUMENT |
|---|---|
| 13.6 PREPARE FOR MISSILE TRANSFER TO STORAGE (CONT'D) | |
| C. MSB Transfer Area shall include the following provisions: | |
| 1. Electrical outlet for Portable Flood Lamps. | |
| 2. Grounding terminal for Ballistic Missile Trailer. | |
| 13.7 TRANSFER MISSILE TO STORAGE RAILS | |
| Roll transfer of the missile shall be accomplished by using the missile storage rail winch as a power source. The missile shall be secured in place by installing wheel blocks and attaching rocket motor carriage grounding jumpers to grounding terminals. All transfer equipment and the alarm set, if installed, will be removed and returned to dispatcher. | Wheel Blocks (Are a part of Storage Rails)<br>Grounding Jumpers (Are a part of rocket motor carriages)<br>Use same equipment as called out in B13.6 except Alignment Set |
| 13.8 STORE AS REQUIRED | D2-13907 Transportation and Handling Procedures, Plant 77 |
| Missile storage requirements are to store a missile inside an MSB or store a loaded SSCBM at the Transient Storage Area. | |
| 13.8.1 MISSILE STORAGE IN MSB | |
| Storage requirements include the following: Verify that the temperature/humidity recorders (located outside of building) and the heating system are operating and secure the building against loss of conditioning. | |

| ASSEMBLY OR CHECKOUT FUNCTION AND TECHNICAL REQUIREMENTS | RECOMMENDED EQUIPMENT OR DOCUMENT |
|---|---|
| 13.8.1 MISSILE STORAGE IN MSB (CONT) | |
| The following provisions in the Missile Storage Building are required: | Alarm System (Facility) |
| A. Temperature Recorder and (humidity recorder on random igloos); | Temperature Recorder (Facility)<br>Humidity Recorder (Facility) |
| B. Heating Unit; | |
| C. Alarm System. | |
| 13.8.2 TRANSIENT STORAGE OF LOADED SSCBM | |
| Transient storage is accomplished by positioning a loaded ballistic missile trailer in the Transient Storage Area, disconnecting the tractor, and returning it to the dispatch area. Transient storage includes installing trailer electric grounding lead and connecting commercial power to the air conditioner and to the Alarm Set (MGE 4187). | Lamp, Incandescent Portable Flood (ACO 4425) |
| SSCBM Transient Storage Area shall include the following provisions: | Cable Assembly-Power Electrical, Portable Flood Lamps (ACO 449 ) |
| A. Electrical Power outlet for supplying power to the air conditioner and the Alarm Set (MGE 4187) on the SSCBM. | |
| B. Electrical power outlet for supplying power to the portable flood lamps. | |
| C. Grounding terminal. | |
| | FUNCTION B13.8.1 |

| ASSEMBLY OR CHECKOUT FUNCTION AND TECHNICAL REQUIREMENTS | RECOMMENDED EQUIPMENT OR DOCUMENT |
|---|---|
| 13.9 PREPARE FOR MISSILE TRANSFER FROM STORAGE<br>The preparation for missile transfer from storage is accomplished using the same equipment and procedures as shown in B13.6. | Use same equipment and procedures as shown in B13.6 |
| 13.10 TRANSFER MISSILE TO SSCBM FROM STORAGE<br>Missile transfer is accomplished using the same equipment and procedures as shown in B13.7; however, the roll transfer power source into the SSCBM will be the ballistic missile trailer winch with the storage rail winch providing restraint. | Use same equipment as shown in B13.7<br>D2-13907, Transportation and Handling Procedures, Plant 77 |

| ASSEMBLY OR CHECKOUT FUNCTION AND TECHNICAL REQUIREMENTS | RECOMMENDED EQUIPMENT OR DOCUMENT |
|---|---|
| 14.0 PREPARATION FOR AIR FORCE ACCEPTANCE OF MISSILE<br>Operations required to sell the completed missile to Air Force Quality Control shall be performed. The historical record shall accompany the missile when it is delivered to the Air Force. | |
| 14.1 INSTALL REMAINING OGE/MGE<br>Install an Alarm Set (MGE 4187) and check that all covers required are installed for delivery of the missile. | Cover End-G&C Section (FSE 7600)<br>D2-11081 (O&M)<br>D2-11172, Installation Procedures and Installation Test Procedure-Transport Monitor System D2-11173 R<br>Alarm Set, Missile Transport Transit Status (MGE 4187)<br>Alarm Set, Charging Cable (FSE 7750) |
| 14.2 RECORDS VERIFICATION<br>The Form DD250 and other applicable forms will be prepared for Air Force acceptance when missile assembly and testing is complete in MAB. | |

| ASSEMBLY OR CHECKOUT FUNCTION AND TECHNICAL REQUIREMENTS | RECOMMENDED EQUIPMENT OR DOCUMENT |
|---|---|
| 15.0 AIR FORCE ACCEPTANCE OF MISSILE<br>The completed guidance and propulsion unit with attached OGE and MGE items shall be transported in the SSCBM to the aircraft or rail transfer area with the transfer forms (DD Form 250) and all required assembly and test records. | |
| 15.1 TRANSFER OF DD FORM 250<br>Representatives of The Boeing Company shall present the transfer forms with the loaded SSCBM to the representatives of the Air Force for signature and transfer of responsibility for the completed missile. The DD Form 250 shall be signed at the Aircraft Transfer Area when the loaded SSCBM is delivered by Boeing personnel for Air Force loading into the C133. The DD Form 250 shall be signed at the Rail Transfer Area when the loaded SSCBM on its trailer has been transferred to the rail car and secured for shipment. | |

## MISSILE ASSEMBLY & CHECKOUT EQUIPMENT

| IDENT. NO. | NOMENCLATURE | CLASS | LOCATION & FUNCTION NUMBER | | | | | |
|---|---|---|---|---|---|---|---|---|
| | | | CPA | MAB | ORDNANCE PROCESSING | MISSILE & MOTOR STORAGE | MISSILE TRANSFER AREA | MISC |
| 13 | Test Set-Ordnance, Electrical, 70143 | FSE | | | B3.3 | | | |
| 17 | Spreader Kit, Nozzle-Stage II | FSE | | B5.1 | | | | |
| 114 | Spreader Assy, Stage I Nozzles | FSE | | B5.1 | | | | |
| 610 | NCU (H9) Sling | FSE | B3.1,B4.1 | B5.1 | | | | |
| 614 | NCU (H2) Trailer, Stage I | FSE | B3.1 | | | | | |
| 615 | NCU (H8) Trailer, Stage II | FSE | B3.1 | | | | | |
| 620 | NCU (H13) Trailer, Stage III | FSE | B3.1 | | | | | |
| 7600 | Cover, End-G&C Section | FSE | B3.1 | B14.1 | | | | |
| 7613 | Adapter, Joining-Missile Interstage I - II | FSE | | B7.4 | | | | |
| ~~7614~~ | ~~Adapter, Joining-Missile Interstage II-III~~ | ~~FSE~~ | | ~~B7.4~~ | | | | |
| 7619 | Fixture, Support-Umbilical Cabling, MAB | FSE | | B6.1,B8.1, B8.2,~~B10.1~~, B12.1 | | | | |
| ~~[illegible]~~ | ~~Fixture, Pressure-Missile Assembly~~ | ~~FSE~~ | | ~~[illegible]~~ | | | | |
| 7628 | Rails-Missile Joining | FSE | | B4.2,B5.1, B7.1,B13.1, B13.2, ~~[illegible]~~ | | | | |

## MISSILE ASSEMBLY & CHECKOUT EQUIPMENT

| IDENT. NO. | NOMENCLATURE | CLASS | LOCATION & FUNCTION NUMBER | | | | | |
|---|---|---|---|---|---|---|---|---|
| | | | CPA | MAB | ORDNANCE PROCESSING | MISSILE & MOTOR STORAGE | MISSILE TRANSFER AREA | MISC |
| 7629 | Rails-Storage, Engine & Missile | FSE | | | | B2.2, B4.2 B13.6, B13.7, B13.9, | | |
| 7630 | Scaffolding-Missile Access | FSE | | B3.2,B5.1, B7.1 | | | | |
| 7631 | Sling-Adapter Ring, Missile Base | FSE | | B11.7 | | | | |
| 7632 | Sling-Horizontal Restraint Ring, Engine | FSE | | B4.2 | | | | |
| 7634 | Sling & Harness, G&C Section | FSE | | B9.1 | | | | |
| 7636 | Sling & Harness-Engine Skirt | FSE | | B7.3 | | | | |
| 7641 | Harness - R. H. Panel, Missile Interstage I-II | FSE | | B11.3,B7.4 | | | | |
| 7642 | Harness - L. H. Panel, Missile Interstage I-II | FSE | | B11.3,B7.4 | | | | |
| 7648 | Installation Kit-Linear Explosive | FSE | | B11.8 | | | | |

## MISSILE ASSEMBLY & CHECKOUT EQUIPMENT

| IDENT. NO. | NOMENCLATURE | CLASS | LOCATION & FUNCTION NUMBER | | | | | | |
|---|---|---|---|---|---|---|---|---|---|
| | | | CPA | MAB | ORDNANCE PROCESSING | MISSILE & MOTOR STORAGE | MISSILE TRANSFER AREA | MISC | |
| 7665 | Kit, Ablative Material Repair | FSE | | B11.10 | | | | | |
| 7666 | Platform, Portable, Highway Transporters | FSE | | | | B2.2 | | | |
| 7678 | Fixture, Test-Ordnance Device | FSE | | | B3.3 | | | | |
| 7679 | Test Set Assembly, Ordnance Circuit | FSE | B3.1 | B8.1,B12.1 B8.2 | | | | | R |
| 7682 | Shelter, Missile and Motor Transfer-Environmental, MAB | FSE | | B13.1, B13.2,B4.2 | | | | | R |
| 7684 | Dolly, Joining-Amplifier, NCU Stage III (Model A only) | FSE | | B5.1 | | | | | |
| 7686 | Clamp Assembly, Missile Transfer | FSE | | B13.1, B13.2 | | B13.6,B13.7 B13.9,B13.10 | | | |
| 7687 | Shelter, Missile and Motor Transfer Environmental-Missile/Motor Storage Building | FSE | | | | B2.2,B4.2, B13.6,B13.7, B13.9, B13.10, | | | R |
| 7688 | Control-Winch, MAB-Storage Bunker | FSE | | B13.1,B13.2 | | B13.6,B13.7 B13.9,B13.10 B4.2,B2.2.1 | | | |

## MISSILE ASSEMBLY & CHECKOUT EQUIPMENT

| IDENT. NO. | NOMENCLATURE | CLASS | LOCATION & FUNCTION NUMBER | | | | | |
|---|---|---|---|---|---|---|---|---|
| | | | CPA | MAB | ORDNANCE PROCESSING | MISSILE & MOTOR STORAGE | MISSILE TRANSFER AREA | MISC |
| 7689 | Bridle, Rocket Motor, Stage I | FSE | | | | B2.2,B4.2 | | |
| 7690 | Bridle, Rocket Motor, Stage III | FSE | | | | B4.2 | | |
| 7691 | Positioning Set, Rocket Motor Carriage | FSE | | | | B4.2 | | |
| 7696 | Test Set and Adapter Cables - Raceway Cables | FSE | | B7.6 | | | | |
| 7701 | Adapter, Joining-NCU, Stage I | FSE | | B5.1 | | | | |
| 7702 | Adapter, Joining-Nozzle Control Unit, Stage II | FSE | | B5.1 | | | | |
| 7703 | Adapter, Joining-Nozzle Control Unit, Stage III | FSE | | B5.1 | | | | |
| 7707 | Dolly, Positioning-G&C Section | FSE | | B9.1 | | | | |
| 7708 | Dolly, Positioning-Final Assembly | FSE | | B5.1 | | | | |

## MISSILE ASSEMBLY & CHECKOUT EQUIPMENT

| IDENT. NO. | NOMENCLATURE | CLASS | LOCATION & FUNCTION NUMBER | | | | | | |
|---|---|---|---|---|---|---|---|---|---|
| | | | CPA | MAB | ORDNANCE PROCESSING | MISSILE & MOTOR STORAGE | MISSILE TRANSFER AREA | MISC | |
| T709 | Dolly, Joining - Skirt to Engine | FSE | | B7.3 | | | | | |
| T717 | Power Supply Group, MAB | FSE | | B6.1,B8.1 B8.2,B12.1 | | | | | R |
| T718 | Cable Assemblies, Equip., Interconnecting, MAB | FSE | | B6.1,B8.1 B8.2,B12.1 | | | | | R |
| T719 | Cable Assemblies, NCU Test, MAB | FSE | | B6.1 | | | | | |
| T720 | Cable Assemblies, Umbilical, MAB | FSE | | B6.1,B8.1 B8.2,B12.1 | | | | | R |
| T721 | Junction Box, Test, MAB | FSE | | B6.1,B8.1, B8.2,B12.1 | | | | | R R |
| T722 | Dummy Load, Re-Entry Vehicle | FSE | | B12.1 | | | | | R R |
| T723 | Console, Missile Checkout | FSE | | B6.1,B8.1, B8.2,B12.1 | | | | | |
| T724 | Test Set, NCU Zero Alignment, MAB | FSE | B3.1 | B6.1,B7.1 | | | | | |
| T730 | Harness-R.H. Panel, Missile Inter Stage II-III | FSE | | B11.3,B7.4 | | | | | |

## MISSILE ASSEMBLY & CHECKOUT EQUIPMENT

| IDENT. NO. | NOMENCLATURE | CLASS | LOCATION & FUNCTION NUMBER | | | | | |
|---|---|---|---|---|---|---|---|---|
| | | | CPA | MAB | ORDNANCE PROCESSING | MISSILE & MOTOR STORAGE | MISSILE TRANSFER AREA | MISC |
| 7731 | Harness-L. H. Panel, Missile Interstage II-III | FSE | | B11.3,B7.4 | | | | |
| 7739 | Junction Box, Auxiliary, MAB | FSE | | ~~B10.1~~,B8.1, B6.1,B8.2, B12.1 | | | | |
| 7740 | Box, Test, Ordnance Cable | FSE | | B8.2 | | | | |
| 7742 | Cable Assemblies, Interconnecting, NCU Linkage Adjustment, CPA | FSE | B3.1 | | | | | |
| 7743 | Distribution Box, NCU Linkage Adjustment, CPA | FSE | B3.1 | | | | | |
| 7744 | Power Supply Group, NCU Linkage Adjustment, CPA | FSE | B3.1 | | | | | |
| ~~7745~~ | ~~Bridle, Carriage, 1st Stage (Rocket Motor Truck)~~ | ~~FSE~~ | | | | ~~B2.2,B4.2~~ | | |
| 7756 | Rail Assembly, Bridge-Engine Transfer | FSE | | | | B2.2,B4.2 | | |
| 7760 | Pulley Bracket Assembly, Transporter, II & III Stage | FSE | | | | B2.2 | | |
| 7750 | Charging Cable Alarm Set | FSE | | B13.1,B16.1 | | B14.1,B13.9 B16.6, B16.9 | | |
| 7746 | Set, Fault Isolation Tooling | FSE | | B1.0,B9.0, B11.0 | | | | |
| 7748 | Test Adapter Cable, Stage I NCU P70B | FSE | | B6.1 | | | | |

R

R

## MISSILE ASSEMBLY & CHECKOUT EQUIPMENT

| IDENT. NO. | NOMENCLATURE | CLASS | LOCATION & FUNCTION NUMBER | | | | | | |
|---|---|---|---|---|---|---|---|---|---|
| | | | CPA | MAB | ORDNANCE PROCESSING | MISSILE & MOTOR STORAGE | MISSILE TRANSFER AREA | MISC | |
| 7787 | Alarm Set, Transit Status, First Stage Motor | FSE | | | | B2.2<br>B4.2 | | | |
| 7788 | Alarm Set Transit Status Third Stage Motor | FSE | | | | B2.2<br>B4.2 | | | |
| 7789 | Device - Restraint First Stage Rocket Motor | FSE | | | | B2.2<br>~~B12.0~~ | | | R |
| 7790 | Device - Restraint Second Stage Rocket Motor | FSE | | | | B2.2<br>~~B12.0~~ | | | R |
| 7791 | Device - Restraint Third Stage Rocket Motor | FSE | | | | B2.2<br>~~B12.0~~ | | | R |
| 10151 | Gage NCU Alignment, Stage I | FSE | B3.1 | | | | | | |
| 10153 | Gage NCU, Verification, Stage I | FSE | | B6.1 | | | | | |
| 10155 | Gage, NCU Alignment, Stage II | FSE | B3.1 | | | | | | |
| 10157 | Gage, NCU Verification, Stage II | FSE | | B6.1 | | | | | |
| 10159 | Gage NCU, Alignment, Stage III | FSE | B3.1 | | | | | | |
| 10161 | Gage NCU, Verification, Stage III | FSE | | B6.1 | | | | | R |
| 7793 | Bracket, Spacer Stage II NCU | FSE | B3.1 | | | | | | |

## MISSILE ASSEMBLY & CHECKOUT EQUIPMENT

| IDENT. NO. | NOMENCLATURE | CLASS | LOCATION & FUNCTION NUMBER | | | | | |
|---|---|---|---|---|---|---|---|---|
| | | | CPA | MAB | ORDNANCE PROCESSING | MISSILE & MOTOR STORAGE | MISSILE TRANSFER AREA | MISC |
| [illegible] | [illegible] | [illegible] | | [illegible] | | | | |
| ~~4053~~ | ~~Adapter, Stabilizing Ring~~ | ~~MGE~~ | | ~~B16.1~~ | | | | |
| ~~4059~~ | ~~Semitrailer, Transporter-Erector~~ | ~~MGE~~ | | ~~B16.1,~~ ~~B16.2~~ | | ~~B16.6,~~ ~~B16.7,~~ ~~B16.9,~~ ~~B16.10~~ | B16.5 | ~~B16.4~~ ~~B16.5~~ |
| 4069 | Clamp Set, Adapter Ring to Missile Skirt | MGE | This item installed on the missile skirt in B11.7 | | | | | B1.1 |
| ~~4075~~ | ~~Truck Tractor, Transporter-Erector~~ | ~~MGE~~ | | ~~B16.1,~~ ~~B16.2~~ | | ~~B16.6~~ ~~B16.7~~ ~~B16.9~~ ~~B16.10~~ | B16.5 | ~~B16.4~~ ~~B16.5~~ |
| 4095 | Shipping and Storage Container, Ballistic Missile | MGE | | B13.1, B13.2 | | B4.2 B13.6, B13,9, B13,7, B13.10 | | |
| 4115 | Air Conditioner | MGE | | B13.1, B13.2 | | B4.2, B13.6, B13,9, B13.7, B13.10 | B16.5 | ~~B16.8~~ ~~B16.5~~ |
| ~~4119~~ | ~~Truck, Transporter-Erector, Support~~ | ~~MGE~~ | | | | | | ~~B16.4~~ |
| 4129 | Trailer, Ballistic Missile | MGE | | B13.1, B13.2 | | B4.2, B13.6, B13.9, B13.7, B13.10 | | |
| 11306 | Kit, Nozzle Shipping Link | MGE | This item is installed on the 1st Stage Nozzles in B12.3 | | | | | |

## MISSILE ASSEMBLY & CHECKOUT EQUIPMENT

| IDENT. NO. | NOMENCLATURE | CLASS | LOCATION & FUNCTION NUMBER | | | | | |
|---|---|---|---|---|---|---|---|---|
| | | | CPA | MAB | ORDNANCE PROCESSING | MISSILE & MOTOR STORAGE | MISSILE TRANSFER AREA | MISC |
| 4130 | Tractor | MGE | | B13.1, B13.2 | | B4.2, B13.6, B13.9, B13.7, B13.10 | | |
| 4187 | Alarm Set, Missile Transport, Transit Status | MGE | | B14.1 | | | | B2.2 * |
| 4493 | Skis, SSCBM | MGE | | B13.1, B13.2 | | B4.2, B13.6, B13.7 B13.9, B13.10 | | |
| | Railway Car, Special | | | | | | B13.5 | |

* Received on Rocket Motor Carriage

## MISSILE ASSEMBLY & CHECKOUT EQUIPMENT

| IDENT. NO. | NOMENCLATURE | CLASS | LOCATION & FUNCTION NUMBER | | | | | | |
|---|---|---|---|---|---|---|---|---|---|
| | | | CPA | MAB | ORDNANCE PROCESSING | MISSILE & MOTOR STORAGE | MISSILE TRANSFER AREA | MISC | |
| ~~ACO~~ 0101 | Semitrailer, Rocket Motor | ~~FSE~~ | | | | | | B1.1.1 B4.4, B2.1 B4.1 | |
| ACO 0565 | Facility Test Fixture | ACO | B3.1, B4.1 | | | | | | |
| ACO 466 | Purging and Drying Kit | ACO | | B12.3 | | | | | |
| ACO 0608 | Hoisting Sling and Cover (H6A) | ACO | B3.1, B4.1 | | | | | | |
| ACO 0667 | Power Supply, D.C. Portable, C95 | ACO | | ~~B6.1~~, B8.1, B8.2, ~~B10.1~~ B12.1 | | | | | R |
| ACO 9278 | Liquid Cooling Equipment, Ground Guidance and Control | ACO | | ~~B6.1~~, B8.1, B8.2, ~~B10.1~~ B12.1 | | | | | R |
| ACO 3119 | Adapter, Spanner Wrench | ACO | | B8.1, ~~B10.1~~, ~~B10.3~~, B12.3 B12.1 | | | | | R |
| ACO 4047 | Wrench, Safing Pin Inst. & Removal | ACO | | | B3.3 | | | | |
| ACO 4175 | Jack Set, Translating | ACO | | B13.1, B13.2, ~~B16.1~~, ~~B16.2~~ | | B4.2, B13.6, B13.7 B13.9, B13.10, ~~B16.6~~, ~~B16.7~~, ~~B16.9~~, ~~B16.10~~ | | | R |
| ACO 0520 | Kit, (NIKE) ~~[illegible]~~ | ~~ACO~~ | | | | | | | |

## MISSILE ASSEMBLY & CHECKOUT EQUIPMENT

| IDENT. NO. | NOMENCLATURE | CLASS | LOCATION & FUNCTION NUMBER | | | | | |
|---|---|---|---|---|---|---|---|---|
| | | | CPA | MAB | ORDNANCE PROCESSING | MISSILE & MOTOR STORAGE | MISSILE TRANSFER AREA | MISC |
| ACO 352 | Lead, Electrical Grounding | SFC/OH | | B13.1<br>B13.2<br>~~B16.1~~<br>~~B16.2~~ | | B2.2,B4.2<br>B13.6,B13.7<br>B13.9,~~B16.6~~<br>~~B16.7,B16.9~~<br>~~B16.10~~ | | B13.8,<br>~~B16.8~~ |
| ACO 4425 | Lamp, Incandescent - Portable Flood | SFC/OH | | B13.1,B13.2<br>~~B16.1,B16.2~~ | | B2.2,B4.2<br>~~B16.7,B16.9~~<br>~~B16.10,B13.6~~<br>~~B13.7,B16.6~~<br>B13.9,B13.10 | | B13.8<br>~~B16.8~~ |
| ACO 4524 | Wrench, Portable Electric | SFC/OH | | | | | B13.5 | |
| ACO 4525 | Stop, Railcar Wheel | SFC/OH | | | | | B13.5 | |
| ACO 4535 | Alignment Set, Missile Transfer | ACO | | B13.1,<br>~~B16.1~~ | | B13.6,<br>B13.9<br>~~B16.6~~<br>~~B16.9~~ | | |
| ACO 449 | Cable Assembly - Power Electrical, Portable Flood Lamps | SFC/OH | | B13.1,~~B16.1~~<br>B13.2,~~B16.2~~ | | B13.6,<br>B13.7<br>B13.10,<br>B13.9,<br>B2.2,B4.2<br>B16.6,B16.7<br>B16.9,<br>B16.10 | | B13.8,<br>~~B16.8~~ |
| ACO 253 | Cable, Rocket Motor Bonding | SFC/OH | | B13.1,B13.2<br>~~B16.1,B16.2~~ | | B4.2,B13.6<br>B13.7,B13.9<br>B13.10,<br>~~B16.6,B16.7~~<br>~~B16.9~~<br>~~B16.10~~ | | |

REVISED 11-26-62

MISSILE ASSEMBLY & CHECKOUT EQUIPMENT

| IDENT. NO. | NOMENCLATURE | CLASS | LOCATION & FUNCTION NUMBER | | | | | |
|---|---|---|---|---|---|---|---|---|
| | | | CPA | MAB | ORDNANCE PROCESSING | MISSILE & MOTOR STORAGE | MISSILE TRANSFER AREA | MISC |
| ACO 448 | Camera and Tripod, Still Picture | SFC/OH | | | | | | B1.1 |
| ACO 405 | Hoist, Portable | SFC/OH | B3.1,B4.1 | | | | | |
| ACO 415 | Jack, Leveling - Support | SFC/OH | | | | B2.2 | | |
| ACO 450 | Hoist, Lever (Come-A-Long) | SFC/OH | | B7.4 | | | | |
| ACO 452 | Truck, Motor-Misc. Delivery | SFC/OH | B3.1,B4.1 | | B4.3 | B2.3 | | B1.1,B2.1 |
| ACO 453 | Truck, Lift - Fork | SFC/OH | B3.1,B4.1 | | | B2.2 | | B1.1,B2.1 |
| ACO 461 | Truck, Lift-Jack | SFC/OH | | | | | | B1.1 |
| - | Recorder, Temperature | Facility | | B7. | | B2.2,<br>B13.9,<br>B13.6,<br>B13.7,<br>B13.10,<br>B13.8,<br>~~B16.8,~~ | | |
| - | Recorder Humidity | Facility | | | | B2.2,<br>B13.6,<br>B13.7,<br>B13.9,<br>B13.8,<br>B13.10,<br>~~B16.8~~ | | |

MISSILE ASSEMBLY & CHECKOUT EQUIPMENT

| IDENT. NO. | NOMENCLATURE | CLASS | LOCATION & FUNCTION NUMBER | | | | | |
|---|---|---|---|---|---|---|---|---|
| | | | CPA | MAB | ORDNANCE PROCESSING | MISSILE & MOTOR STORAGE | MISSILE TRANSFER AREA | MISC |
| ACO 454 | Sling-Standard, Factory-4 drop | SFC/OH | | B5.1,B7.4, B9.1 | | | | B1.1 |
| ACO 456 | Table, Work-Electronic Test | SFC/OH | B3.1 | | | | | |
| ACO 462 | Shelving, Storage | SFC/OH | | | B2.3,B4.3 | | | B4.1 |
| - | Scale, Weighing | Facility | | B11.10 | | | | |
| - | Alarm System | Facility | | | | B2.2,~~B16.8~~, B13.8 | | |
| - | Hoist, Overhead Rail Type | Facility | | B4.2,B5.1, B7.4,B9.1 | | | | |
| - | Truck, Tractor, Rocket Motor | GFP | | | | | | B4.4 |
| ACO 468 | Sling, G&C Section Container Cover | SFC/OH | B3.1,B4.1 | | | | | |
| - | ~~Security Vehicle~~ | ~~GFP~~ | | | | | | ~~B16.4~~ |
| ACO 532 | Portable Temperature Recorder | SFC/OH | | B13.2 | | | | B2.2.1 B4.2.1 |

## SECTION B - REQUIRED DOCUMENTS

| DOC. NO. | TITLE | SECTION |
|---|---|---|
| D2-6610 | Missile Production Operating Logistics - A/F Plant 77 | B1.1,B1.2,B13. |
| D2-7295 | AVCOAT Repair Procedures | B11.10 |
| D2-9133 | Minuteman Standard Operating Procedures, Ordnance Devices | B1.4, B2.3,B11.4 |
| D2-9520 | SM-80 Functionl Test Procedures-MAB-Plant 77 | B6.1,~~B10.0~~,B12.0 |
| D2-9555 | Handbook of Operating Procedures-Engine Handling Harness and Horizontal Restraint and Bracket Assembly Sets | B4.2, B11.0 B1.2 |
| D2-10825-104 | Rack, Assembly-Guidance & Control Ground Cooling Operation, Service & Repair Instructions | ~~B10.1~~ B12.1 |
| D2-10901 | Operation and Maintenance - Rails - Missile Joining | B4.2,B5.1, ~~B16.1~~ B7.1, B13.1 |
| D2-10903 | Operation and Maintenance-Scaffolding-Missile Joining | B3.2,B5.1,B7.1 |
| D2-10905 | Operation and Maintenance-Fixture, Support Umbilical Cabling, MAB | ~~B10.1~~ B12.1 |
| D2-10907 | Operation and Maintenance-Rails, Storage, Engine and Missile | B2.2, B4.2, B13.6 B6.6 ,B13.9 |
| D2-10922 | Operation and Maintenance-Dolly, Joining Amplifier NCU, Stage III | B5.1 |
| D2-10925 | Operation and Maintenance-Control-Winch, MAB & Storage Bunker | B13.1 |
| D2-10927 | Operation and Maintenance-Dolly, Positioning-Final Assembly | B5.1, B7.4 |
| D2-10929 | Operation and Maintenance-Adapter, Joining-Interstage I-II | B7.4 |
| D2-10960 | Operation and Maintenance-Adapter, Joining-NCU Stage I (Model B, NCU) | B5.1 |

SECTION B - REQUIRED DOCUMENTS (CONT)

| DOC. NO. | TITLE | SECTION |
|---|---|---|
| D2-10931 | Operation and Maintenance-Dolly, Joining-Skirt to Engine | B7.3 |
| D2-10933 | Operating and Maintenance-Bridle-Rocket Motor Stage I | B2.2, B4.2 |
| D2-10935 | Operation and Maintenance-Dolly, Positioning-G&C Section | B9.1 |
| D2-10937 | Operation and Maintenance-Adapter, Joining NCU Stage II (Model A NCU) | B5.1 |
| D2-10939 | Operating and Maintenance-Bridle-Rocket Motor, Stage III | B4.2 |
| [illegible] | Operating and Maintenance-Bridle-Carriage Int Stage (Rocket Motor Truck) | B2.2, B4.2 B5.1 |
| D2-10944 | Operation and Maintenance-Fault Isolation Tooling Set, Checking Fixture | B7.0, B9.0 B11.0 |
| D2-10945 | Operation and Maintenance - Adapter, Joining NCU Stage I (Model A NCU) | B5.1 |
| D2-10947 | Operation and Maintenance - Adapter, Joining NCU Stage III | B5.1 |
| D2-10949 | Operation and Maintenance-Harness-R.H. Panel Missile Interstage I-II | B7.4, B11.3 |
| D2-10964 | Operation and Maintenance - Sling - Adapter Ring, Missile Base | B5.17 |
| D2-10974 | Operating and Maintenance - Sling & Harness Engine Skirt | B7.3 |
| D2-10990 | Operation and Maintenance-Sling and Harness- G&C Section | B9.1 |
| D2-10994 | Operation and Maintenance - Harness-L.H. Panel, Missile Interstage I-II | B7.4, B11.3 |
| D2-11004 | Operation and Maintenance - Installation Kit - Linear Explosive | B11.8 |
| D2-11012 | Operation and Maintenance - Sling - Horizontal Restraint Ring, Engine Stage I, II & III | B4.2 |
| D2-11014 | Operation and Maintenance - Sling - Adapter Ring, Missile Base | B11.7 |

R

R

SECTION B - REQUIRED DOCUMENTS (Continued)

| | | |
|---|---|---|
| D2-11027 | Operating and Maintenance-Winch, Portable-Rocket Motor Transfer | B2.2, ~~B16.1~~ |
| D2-11051 | Operating and Maintenance-Platform Portable Highway Transporter | B2.2 |
| D2-11072 | Operation and Maintenance-Harness - L. H. Panel Interstage II-III | B7.4, B11.3 |
| D2-11074 | Operation and Maintenance-Harness - R. H. Panel, Missile Interstage II-III | B7.4, B11.3 |
| D2-11081 | Operation and Maintenance-Cover, End - Guidance and Control Section | B3.1, B14.1 |
| D2-10993 | Operating and Maintenance-Shelter, Missile and Motor Transfer - Environmental, MAB | B4.2, B13.1, ~~B16.1~~ |
| D2-11087 | Operating and Maintenance - AVCOAT Repair Kit | B11.10 |
| D2-10997 | Operating and Maintenance - Shelter, Missile and Motor Transfer-Environmental, Missile/Motor Storage Building. | B2.2, B4.2, B13.6 B16.6, B13.9 |
| D2-11172 | Installation Procedure and Installation Test Procedures - Transport Monitor System | ~~B2.2, B4.2,~~ B14.1, ~~B16.2, B16.7~~ |
| D2-11173 | Operation Procedure, Alarm Set, Missile Storage Transit Status | ~~B2.2, B4.2,~~ B14.1, ~~B16.2, B16.7~~ |
| D2-11323 | Functional Test Procedures, Guidance Section, NS10-P | B12.3 |
| D2-11324 | Functional Test Procedures, Guidance Section, NS10-Q | B12.3 |
| D2-11776 | Operation and Maintenance Instructions, Rocket Motor M57 | B3.3 |
| D2-11777 | Transportation and Handling Procedures - M57 Rocket Motor | B1.2, B2.2, B4.2 |
| ~~D2-10966~~ | ~~Operation and Maintenance - Transfer Kit, Missile TE/Rails~~ | ~~B16.1, B16.6, B16.7 B16.9, B16.10~~ |
| D2-12205 | Ordnance Electrical Test Set - Operation and Maintenance | B3.3 |
| D2-12214 | M56-Rocket Motor Inspection Procedure, Storage and Safety | B1.2, B2.2 |
| ~~D2-10956~~ | ~~Operation and Maintenance - Adapter, Hoisting, Handling Frame, NGU Stage II~~ | ~~B5.1~~ |

SECTION B - REQUIRED DOCUMENTS (Continued)

| DOC. NO. | TITLE | SECTION |
|---|---|---|
| D2-12216 | M56 Rocket Motor, Handling, Operating, and Maintenance Instructions | B2.2, B4.2 B5.1 |
| D2-12217 | M56 Rocket Motor Post Assembly Test | B3.3 |
| ~~D2-12368~~ | ~~M55 Rocket Motor Maintenance and Repair Instructions~~ | ~~B1.2~~ |
| D2-12369 | Transportation, Handling and Storage Instructions M55 Rocket Motor | B1.2 and B2.2 B4.2 |
| D2-12401 | Operation and Maintenance - Console, Missile Checkout | ~~B10.2~~ B12.2 |
| D2-12789 | Missile Handling and Transporting | B13.1 |
| D2-12974 | Rocket Motor Semitrailer Operation and Safety Instructions (Stage I, II, III) | B4.4 |
| D2-12977 | Operation and Maintenance - Test Set, NCU Zero Electrical Alighment | B6.1 |
| D2-13445 | Ordnance Component and Subsystem Functional Testing of Operational Missiles, Plant 77 | B8.1, B8.2 B12.1, B3.1 |
| D2-13482 | Functional Test Procedure, Arm/Disarm Mechanism, 10-20436 for Plant 77 | B3.3 |
| D2-13483 | Functional Test Procedurds, Detonator Assembly 10-20451, for Plant 77 | B3.3 |
| D2-13732 | NCU Linkage Adjustment Procedures | B3.1 |
| D2-13764 | G&C Section Purging and Drying Procedures | B12.3 |
| D2-13907 | Transportation and Handling Procedures, Plant 77 | B2.1, B4.2 B4.1, B13.1, B13.5, B13.6 B13.7, B13.9 B13.10, ~~B16.1~~ ~~B16.2, B16.5~~ ~~B16.6, B16.7~~ ~~B16.9, B16.10~~ |
| D2-14116 | Operating Procedures and Maintenance Instructions for Raceway Cable Test Set and Adapter Cables-MAB | B7.6 |
| D2-14380 | Installation Procedure, Restraint Band, Impaling and Puncturing Device SM-80 Missile | D2.2, B12.0 |
| AA0304-072 | NCU Sealing Specification | B3.1 |
| EM-2084 | Utility Technical Manual - Operation and Service | B3.1, B5.1 |
| EM 2386 | Operation and Service Instructions, Battery Power Supply Model C95A. | ~~B10.1~~ B12.1 |

## SECTION B - REQUIRED DRAWINGS

| DRAWING NO. | TITLE | SECTION |
|---|---|---|
| 25-27597 | Flight Control Unit and Battery Pwr Supply Instl. Stage I | B5.2, B3.1 |
| 25-27598 | Installation SE13 Battery & Nozzle Control Unit, Stage II | B5.2, B3.1 |
| 25-27599 | NCU Installation Stage III | B5.2 |
| 25-27524 | Electrical Cabling Unit Support Components & Loose Equipment Installation, Sections 44-49 | B7.1, B7.6, B7.7 B11.2 |
| 25-25879 | Base Heat Deflector Installation, Stage I | B7.2 |
| 25-25880 | Base Heat Deflector Installation, Stage II | B7.2 |
| 25-25881 | Base Heat Deflector Installation, Stage III | B7.2 |
| 25-27208 | Skirt Installation, Stage I | B7.3, B11.5 |
| 25-27202 | Interstage I-II Installation | B7.4, B11.5 |
| 25-27205 | Interstage II-III Installation | B7.4, B11.5 |
| 25-27617 | Angular Accelerometer, Interstage II-III, Installation | B7.5 |
| 25-27596 | Body Section Central and Battery Installation, Stage III | B9.1, B3.1, B11.5 |
| 25-27211 | Raceway Components Installation to Sections 44-49 | B11.6 |
| 25-19176 | Missile Support Ring and Clamps Installation | B11.7 |
| 25-27238 | Ordnance Installation, Joint Severance and Stage Separation Interstages I-II and II-III | B11.1, B11.8, B7.4 |
| 25-27221 | Cable Disconnect Bracket Components, Interstage I-II, Installation | B7.4 |
| 25-27227 | Cable Disconnect Bracket Components, Interstage, II-III' Installation, | B7.4 |
| 21-50150 | Missile Assembly-Operational | B11.5 |
| 21-51750 | Missile Assembly - GTM 077 | B11.5 |
| 21-51725 | Missile Assembly - GTM 010 | B11.5 |
| 25-27212 | Sealing | B11.10 |
| 8U34528 | Nozzle Shipping Link Installation | B12.3 |

SECTION B - REQUIRED DRAWINGS

| DRAWING NO. | TITLE | SECTION |
|---|---|---|
| 62K31248 | Restraint Band Installation - Impaling and Puncturing Device M55 Rocket Motor | B2.2 |
| 62K31249 | Restraint Band Installation - Impaling and Puncturing Device M56 Rocket Motor | B2.2 |
| 62J31250 | Restraint Band Installation - Impaling and Puncturing Device M57 Rocket Motor | B2.2 |

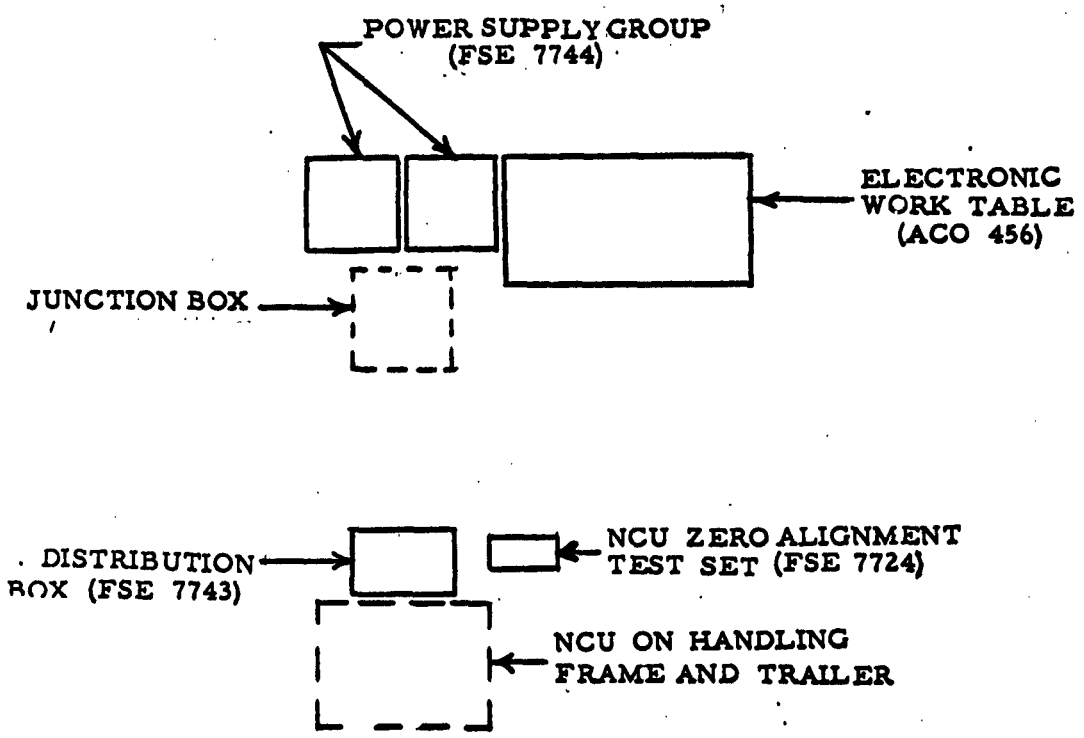


NCU LINKAGE ADJUSTMENT POSITION COMPONENT PROCESSING BUILDING

FIGURE 2 - B

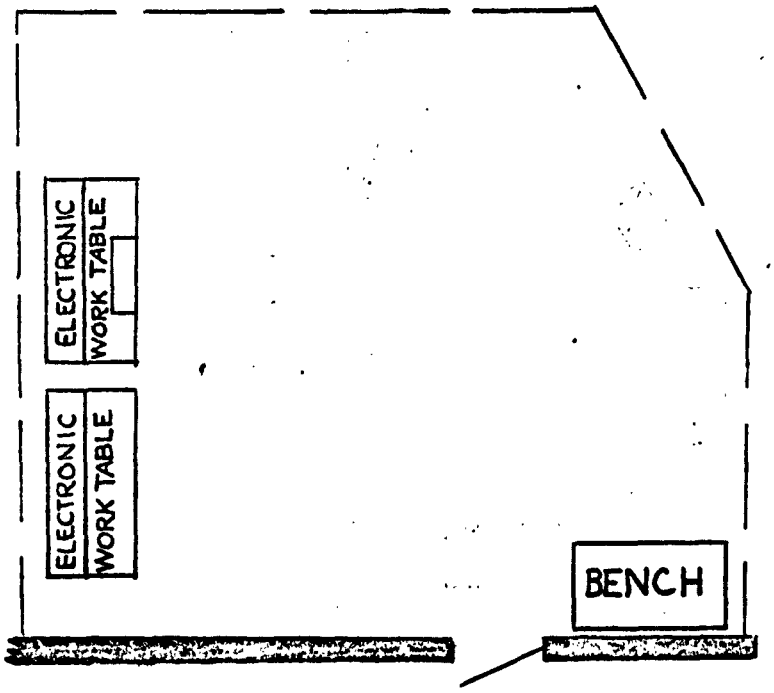


BATTERY PACKAGE TEST AREA
COMPONENT PROCESSING BUILDING

FIG 3-B

REVISED 11-15-61 8-31-61 5-15-61

U3 4200 2000 (WAS BAC 4131D)

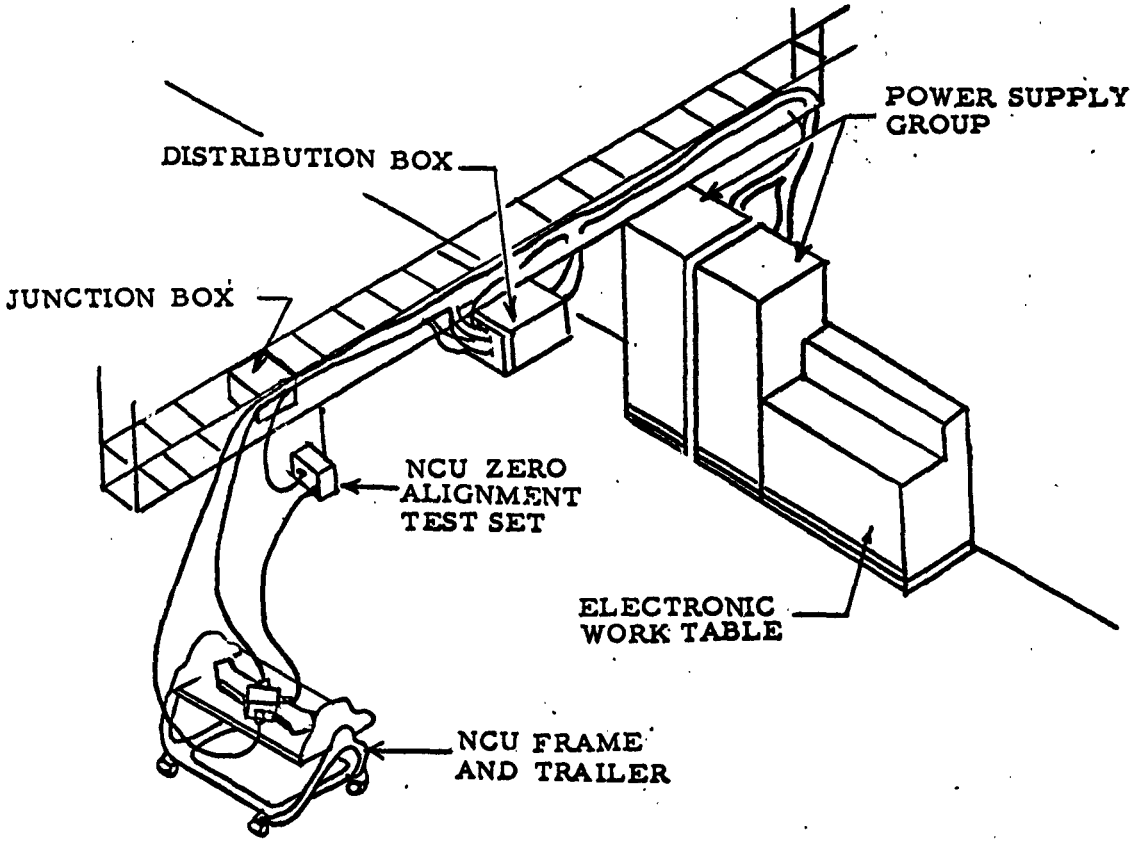


NCU LINKAGE ADJUSTMENT COMPONENT PROCESSING BLDG.

FIGURE 5 - B

# MOTOR BUILDUP
## (INITIAL ASSY PO

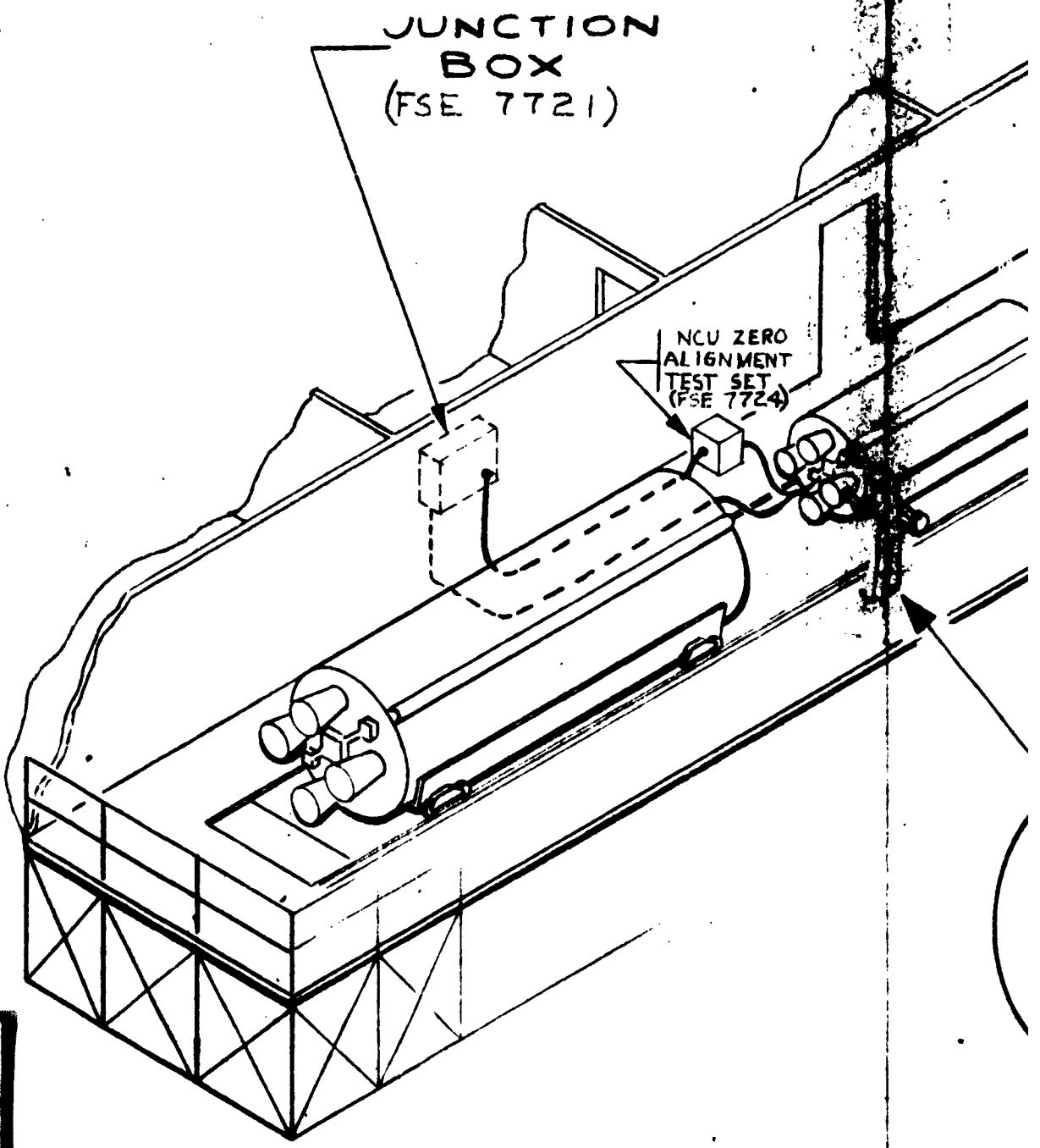

UILDUP & TEST

ASSY POSITION)

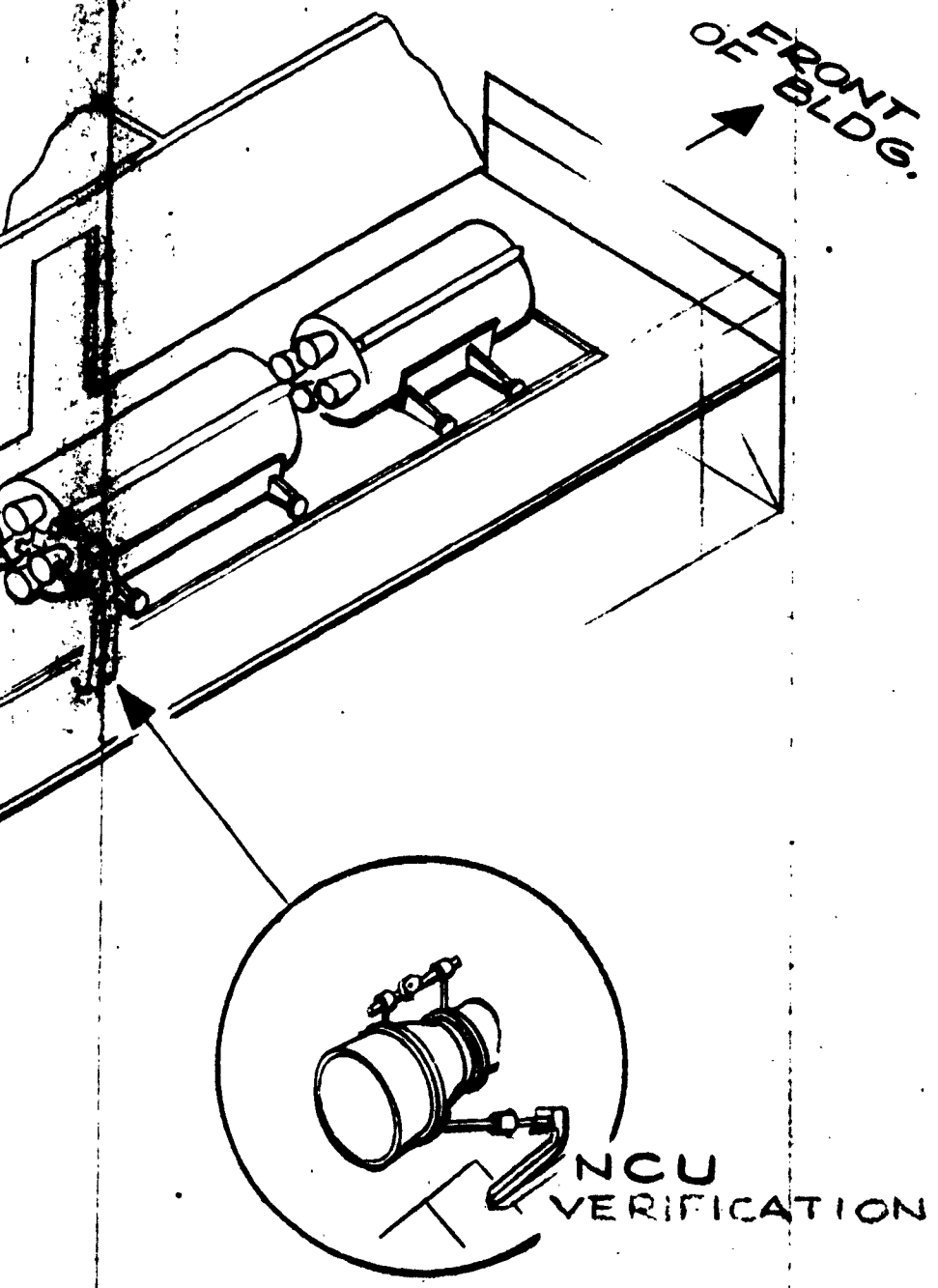


2

R

FIGURE 6-B

# MAB — MISSILE CHECK

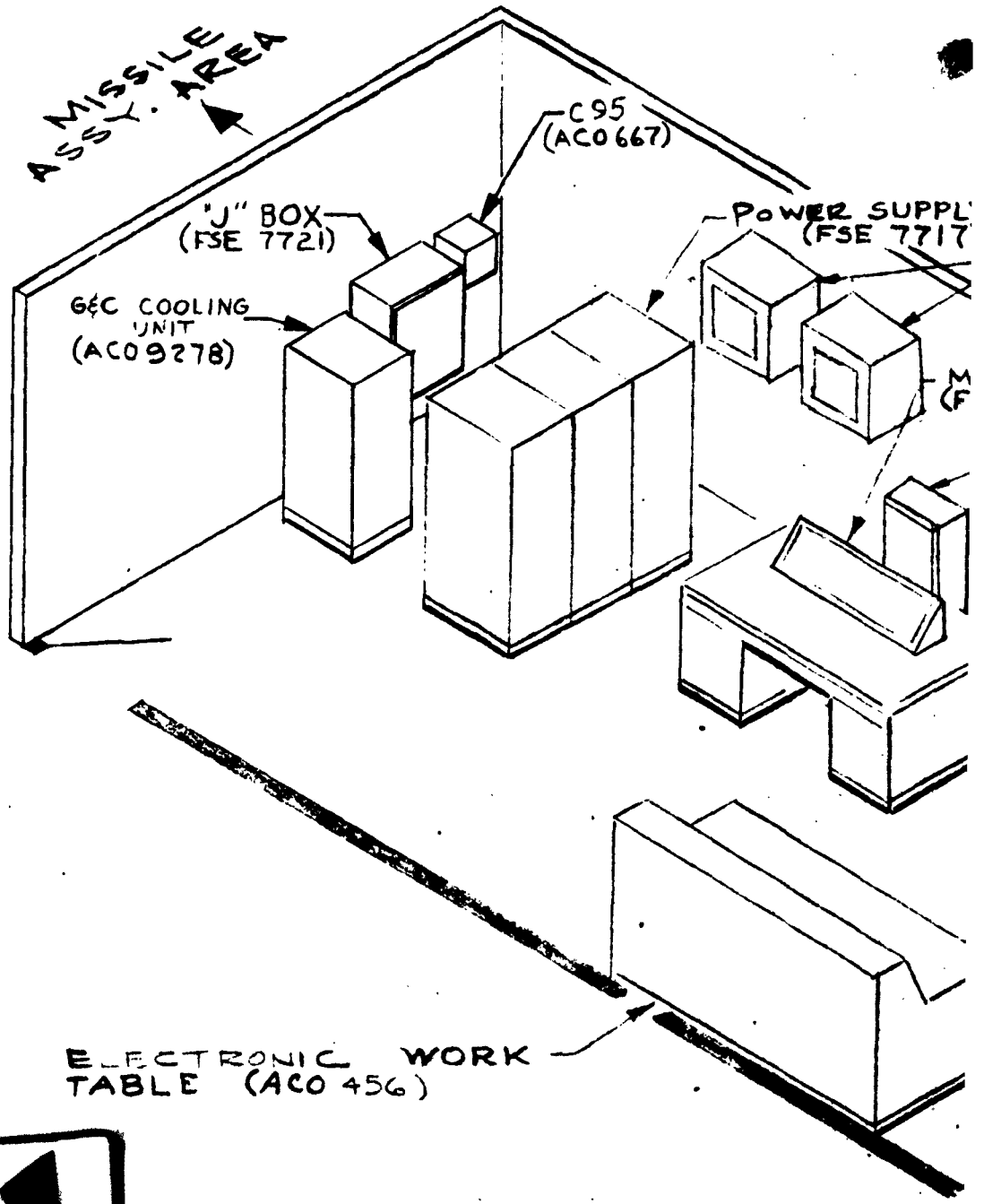


FILE

DESK

REVISED 6-1-62

# MISSILE CHECKOUT AREA

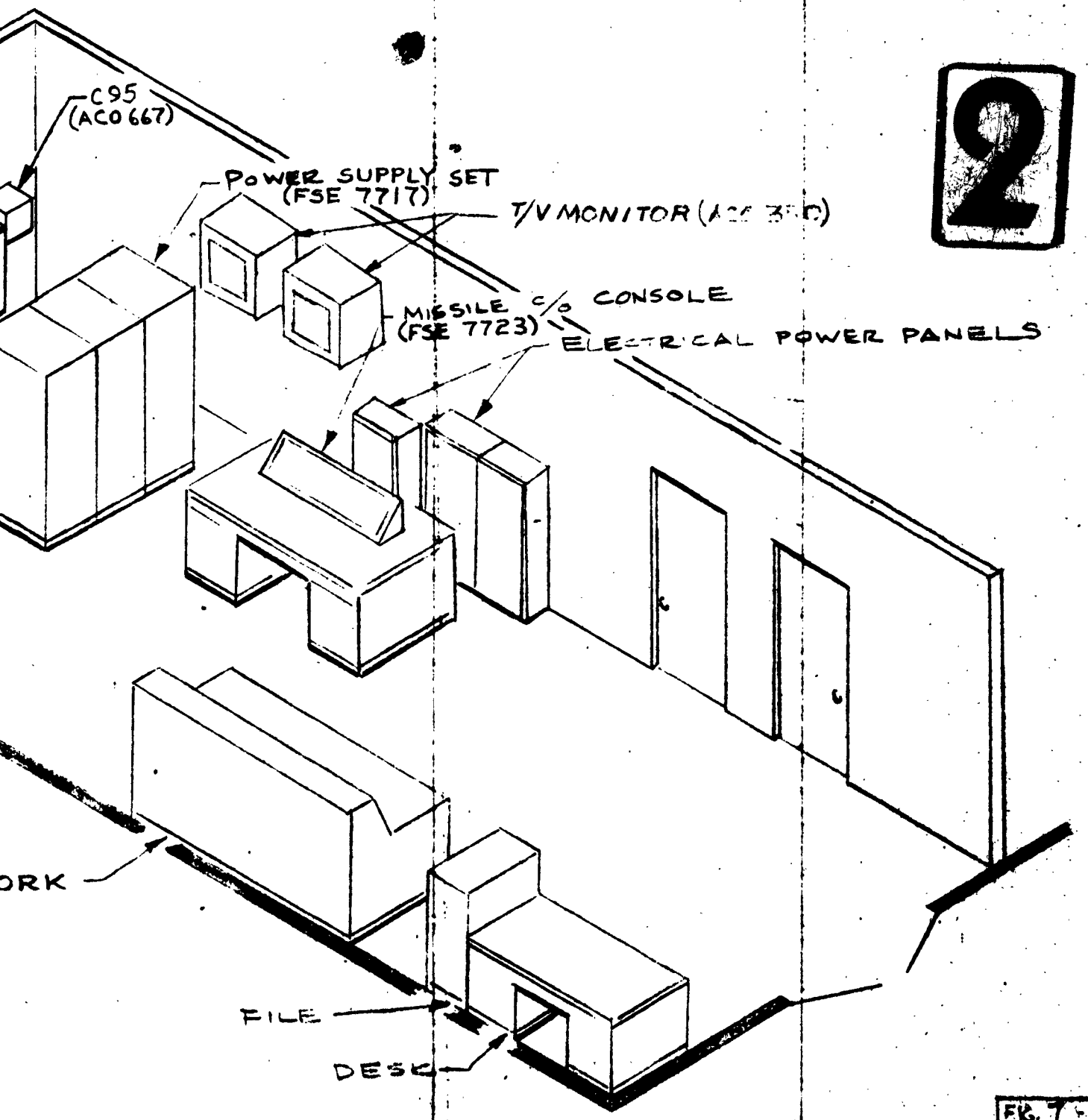


FIG. 7-8

MISSILE ASSY. & TE
(FINAL ASSY. POS
ORDNANCE CIRCUI

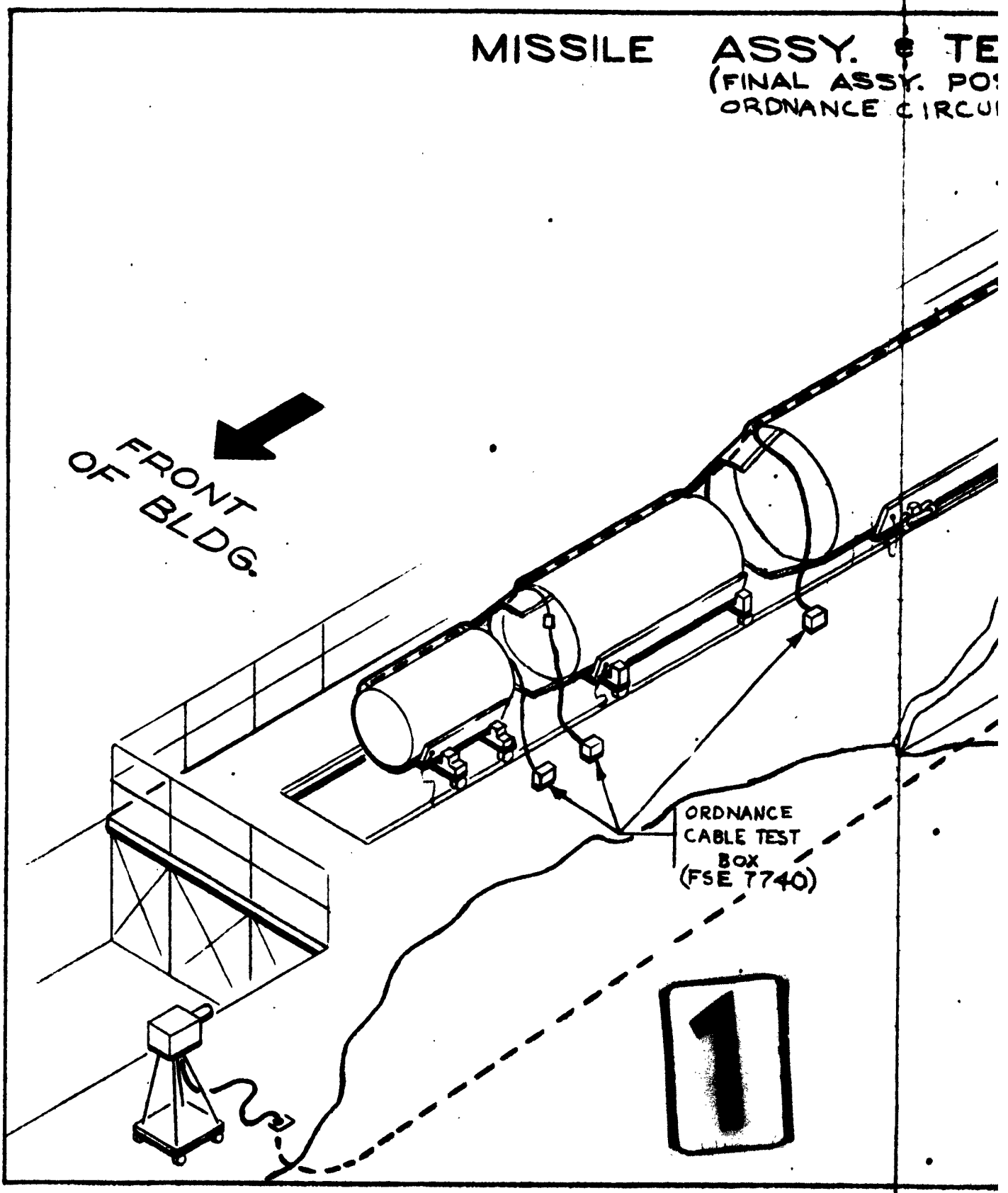

Y. & TEST POSITION
ASSY. POSITION)
NCE CIRCUITRY TEST

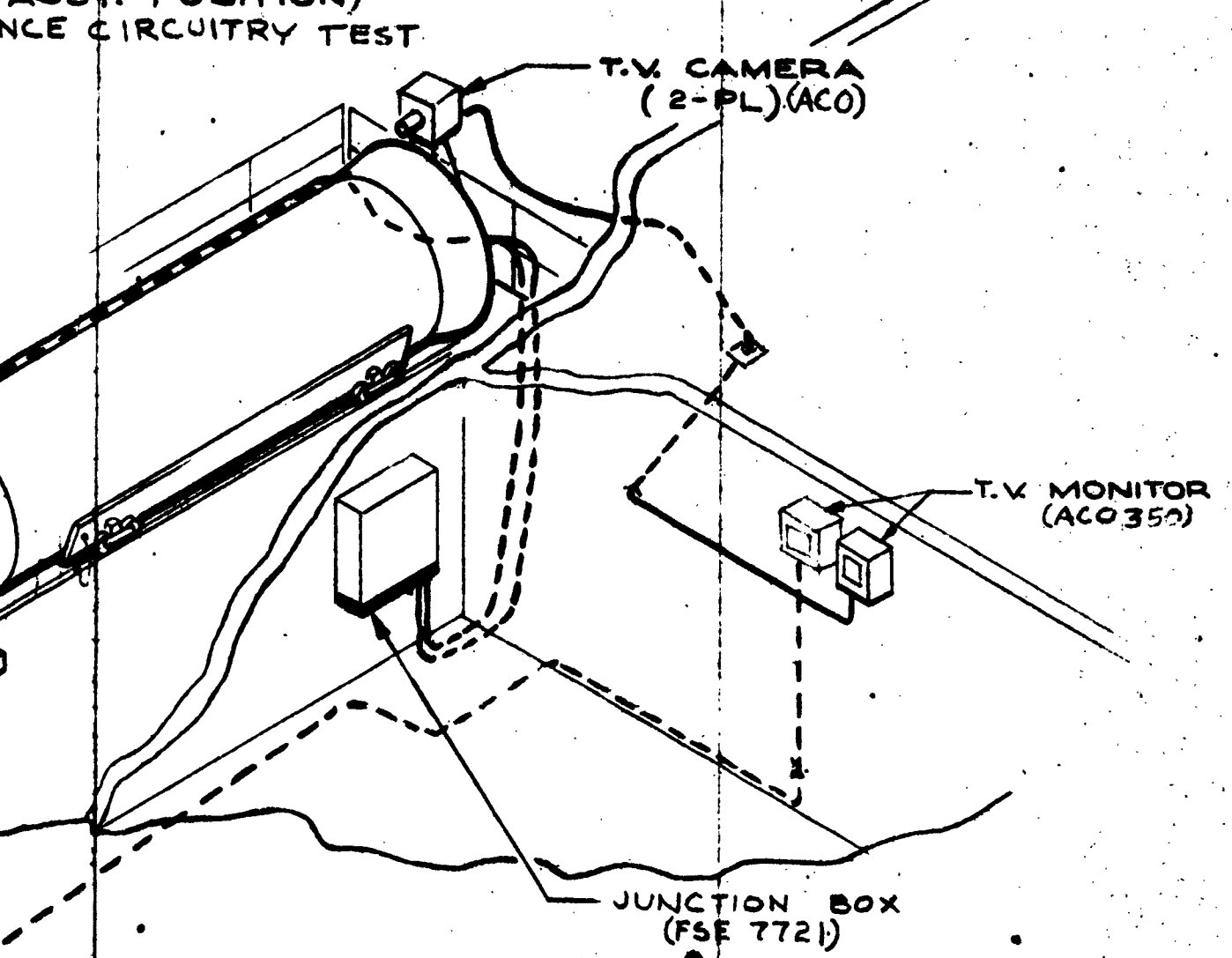


2

FIGURE 6-5

REVISED 6-1-62

MISSILE ASSEMBLY &
(FINAL ASSEMBLY
MISSILE FUNCTIONA

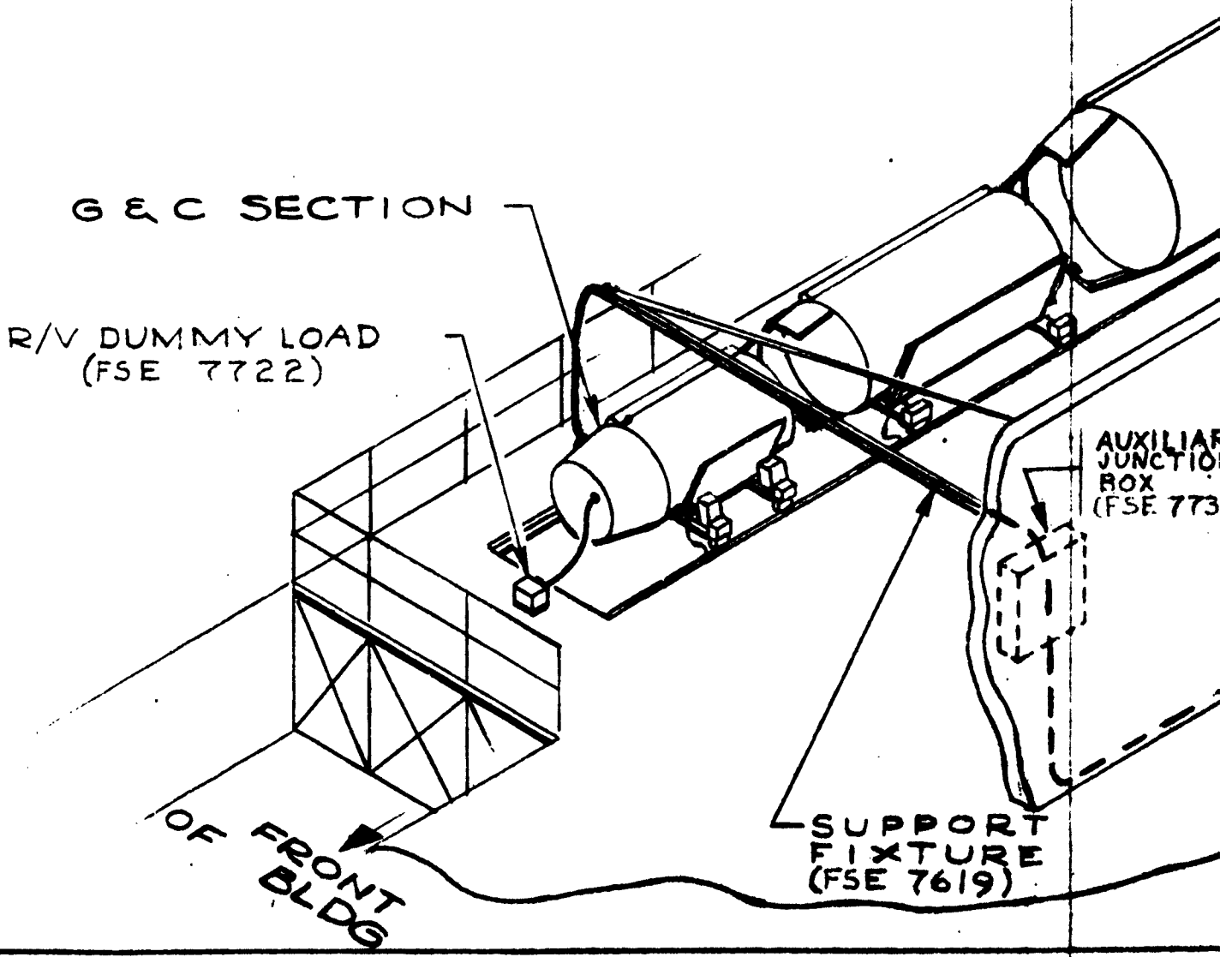

BLY & TEST POSITION

EMBLY POSITION)

UNCTIONAL TEST

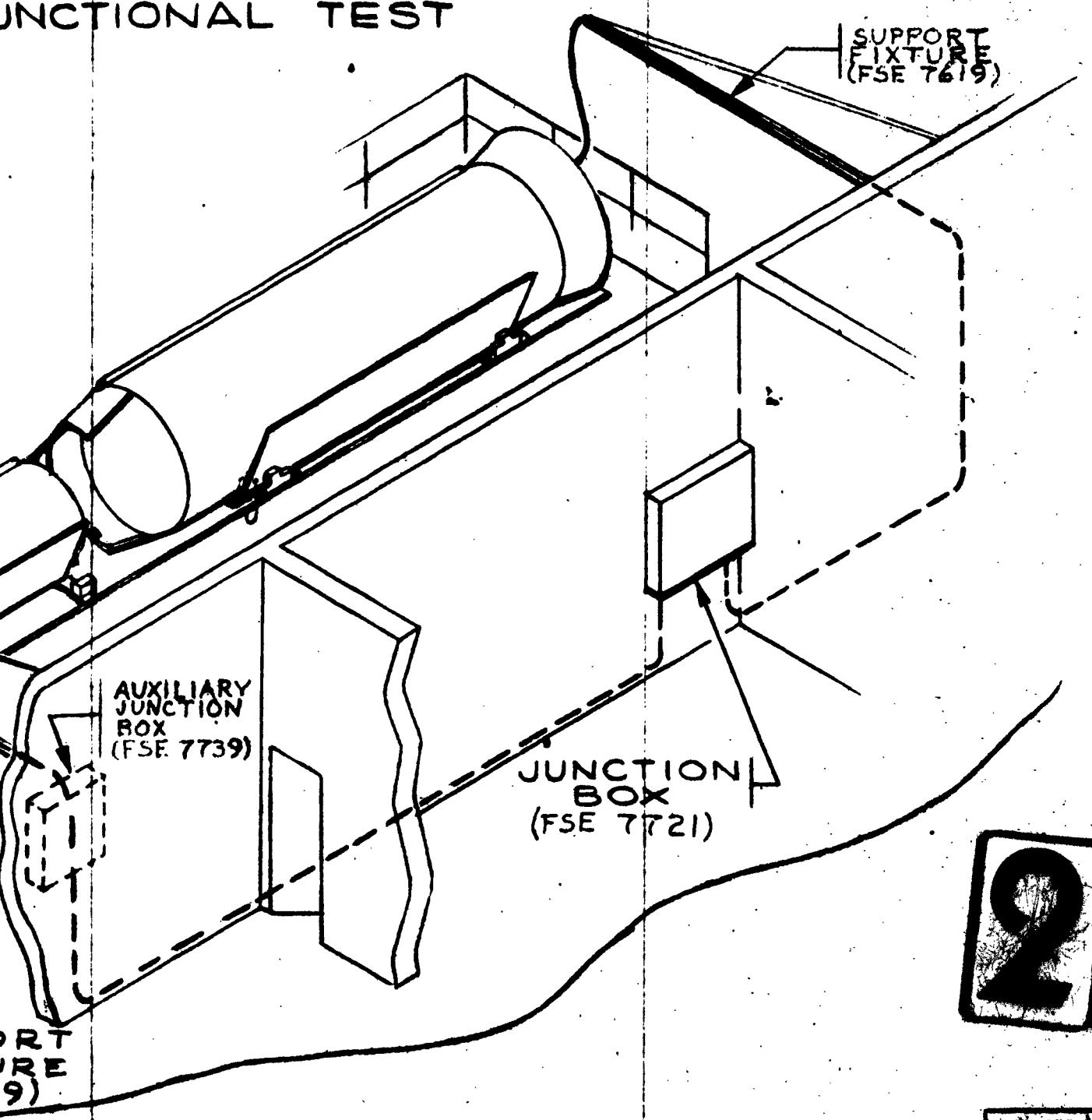


FIGURE [illegible]-B

REVISED 11-15-61 8-31-61 5-15-61

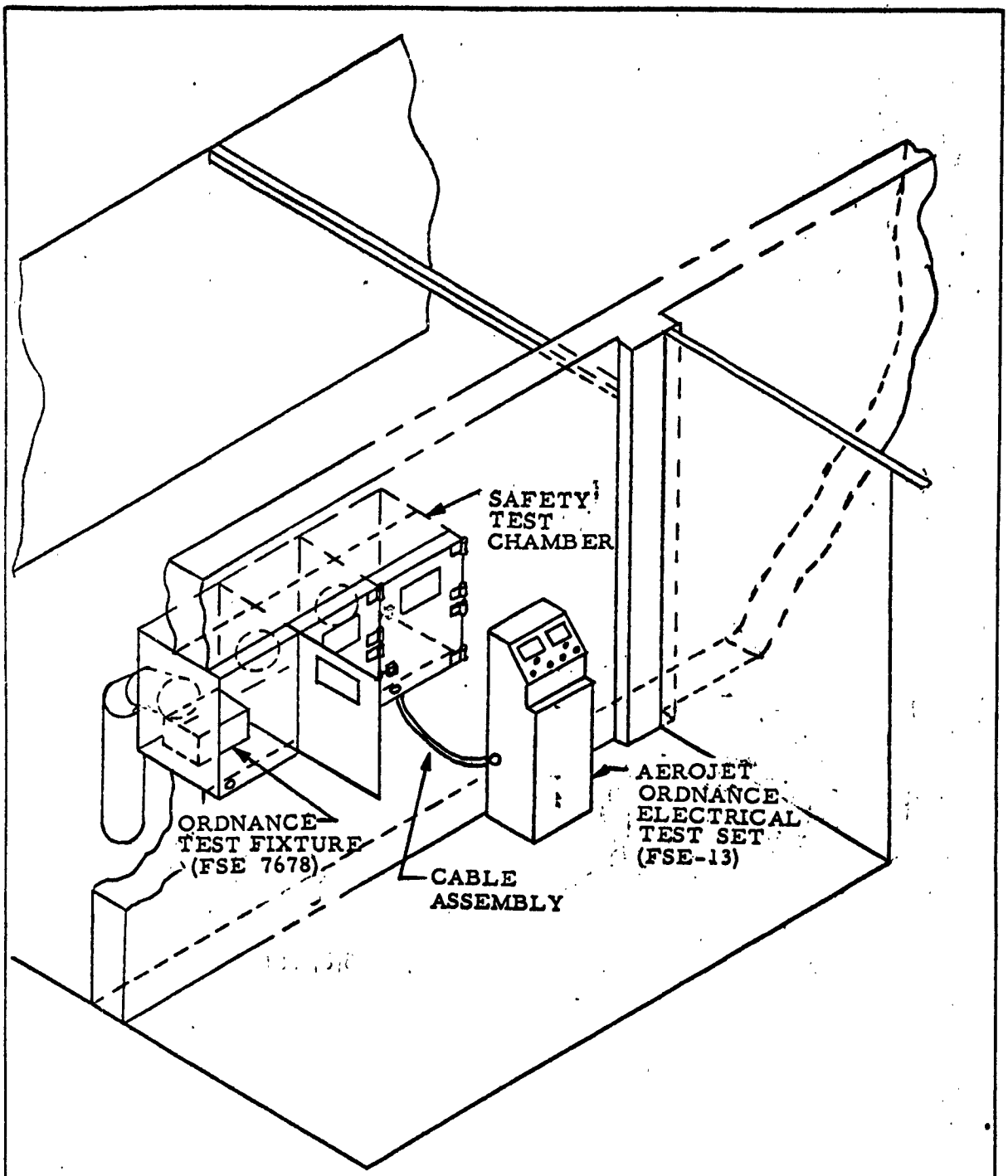


ORDNANCE COMPONENT TEST FACILITIES SQUIB & IGNITOR RECEIVING & INSPECTION BLDG.

FIGURE 10 - B

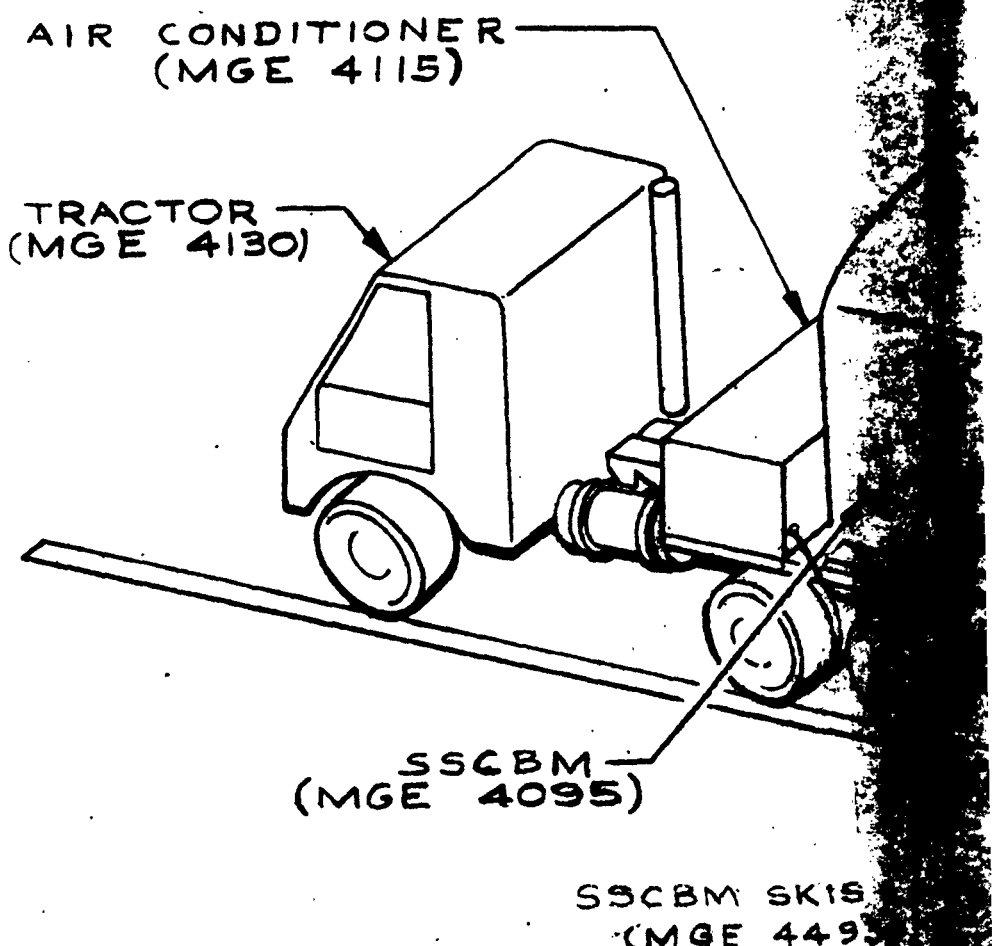
AIR CONDITIONER
(MGE 4115)
TRACTOR
(MGE 4130)
SSCBM
(MGE 4095)
SSCBM SKIS
(MGE 449

1

# MOTOR TRANSFER FROM STOR

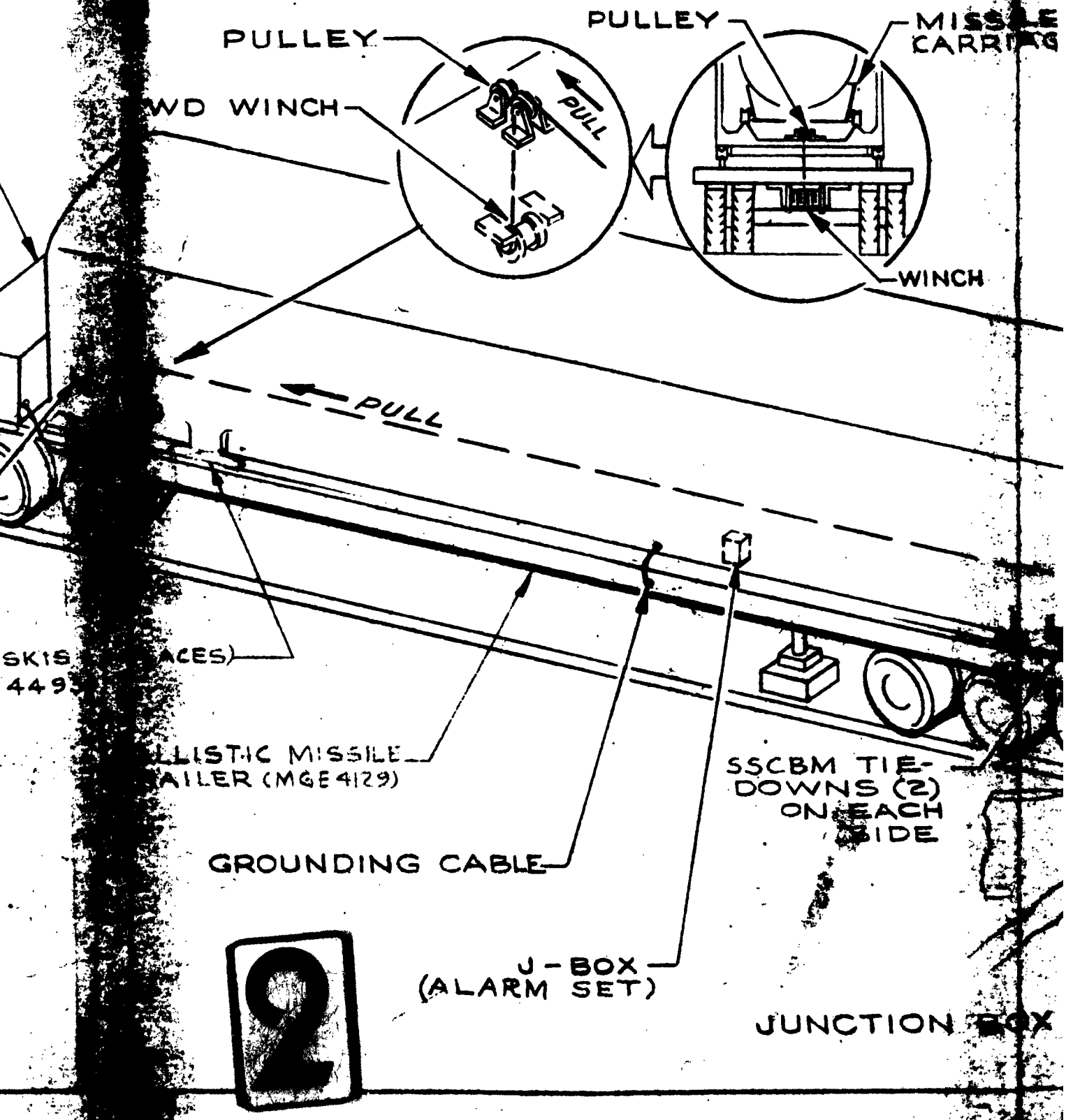

# RAGE BUILDING IN TO SSCBM

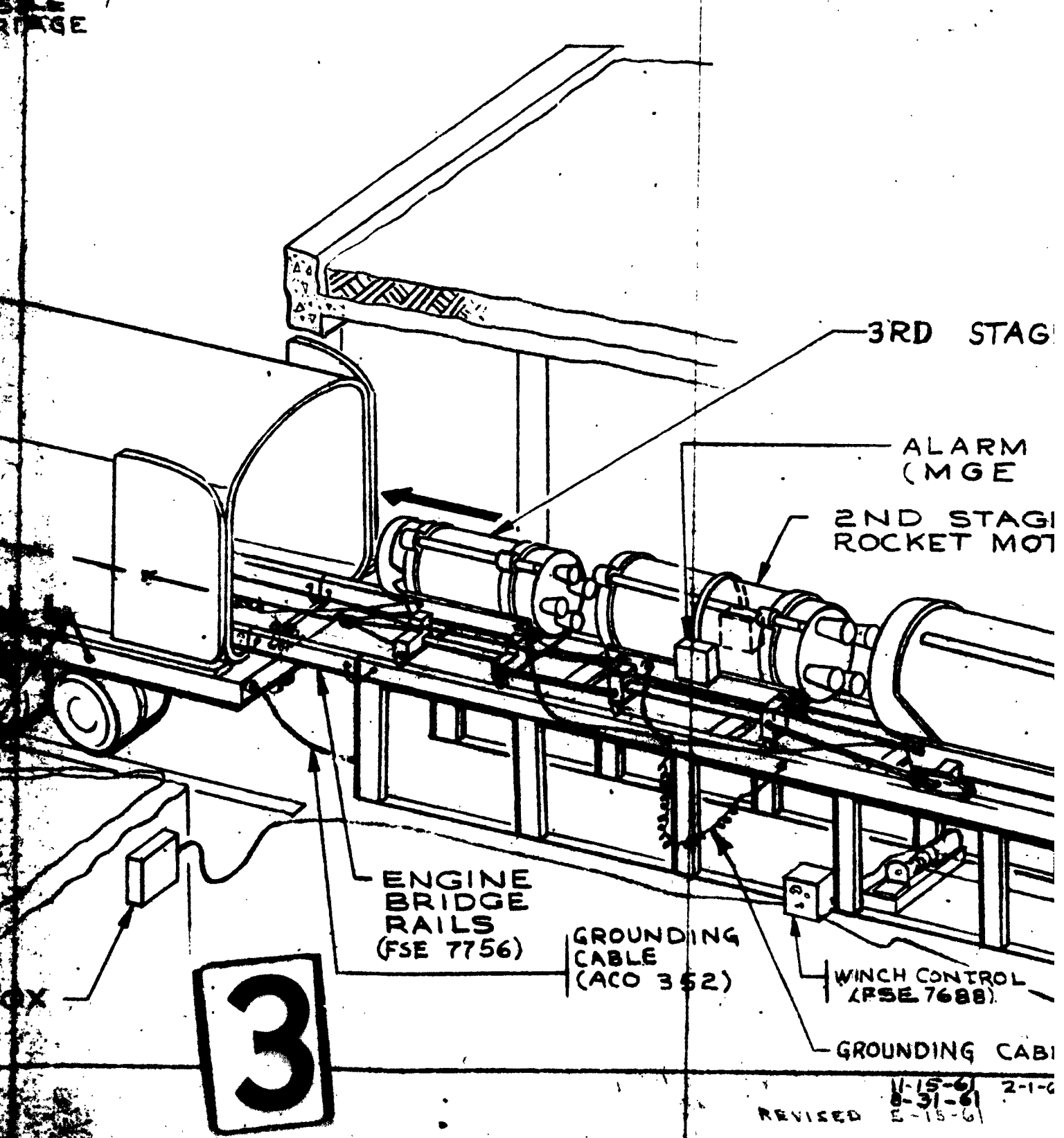


1-15-61 2-1-6
8-31-61
REVISED 5-15-61

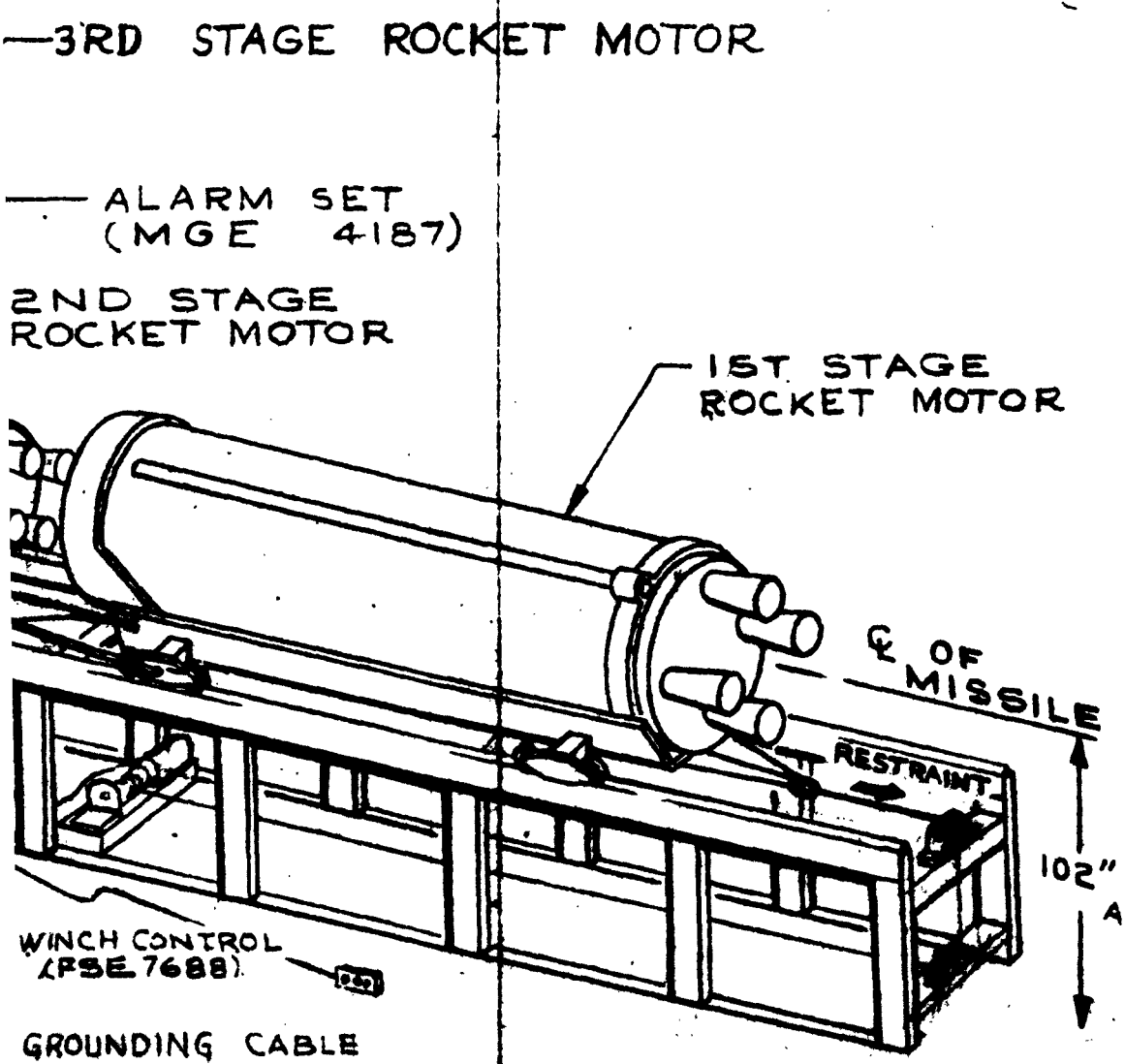
3RD STAGE ROCKET MOTOR
ALARM SET (MGE 4187)
2ND STAGE ROCKET MOTOR
1ST STAGE ROCKET MOTOR
℄ OF MISSILE
RESTRAINT
102" TO OUTSIDE APRON
WINCH CONTROL (PSE 7688)
GROUNDING CABLE

4

FIGUR

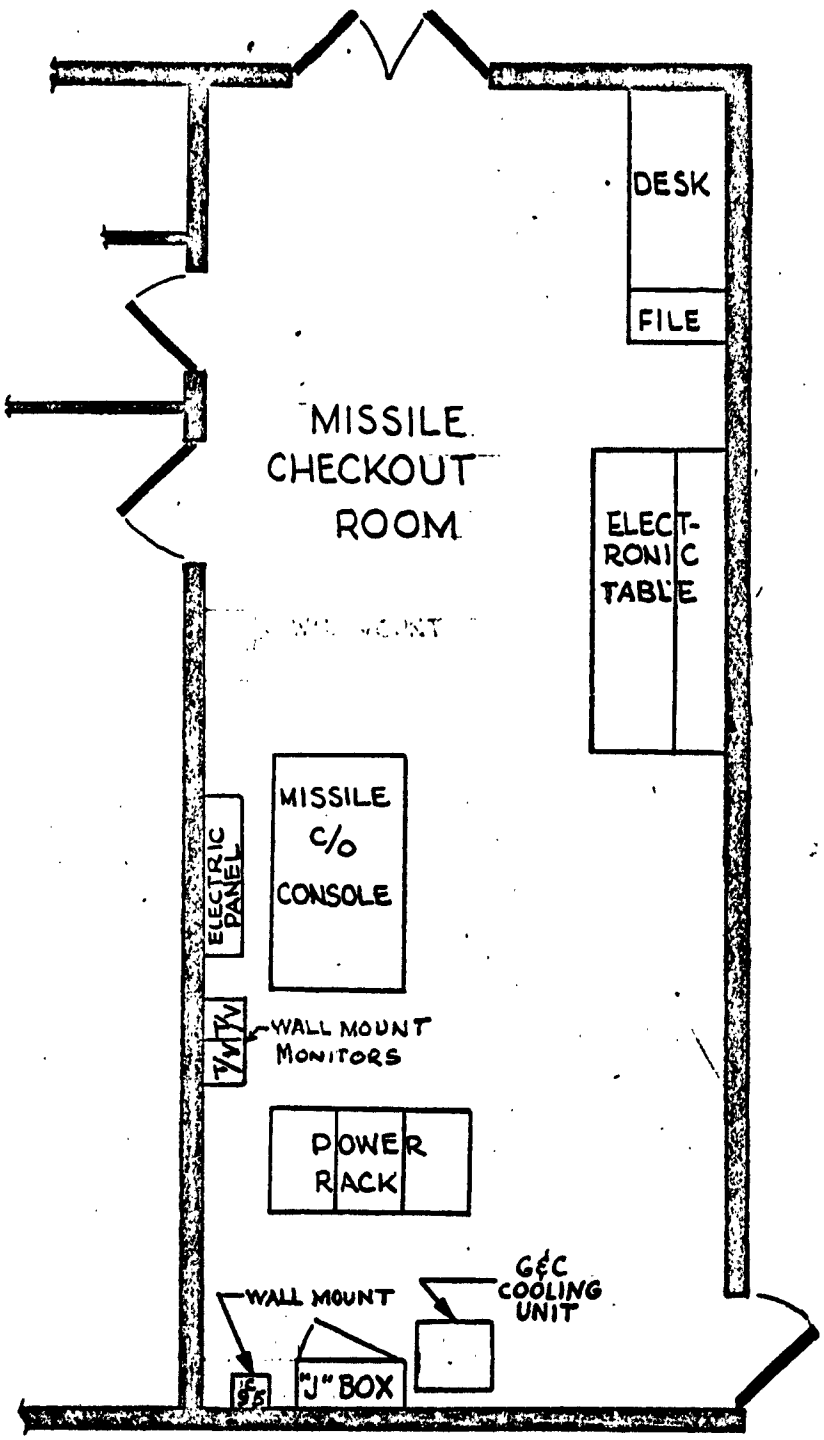
DESK
FILE
MISSILE CHECKOUT ROOM
ELECT-RONIC TABLE
MISSILE C/O CONSOLE
ELECTRIC PANEL
TV
WALL MOUNT MONITORS
POWER RACK
G&C COOLING UNIT
WALL MOUNT
"J" BOX

FIG. 12-B

# 1ST STAGE MOTOR TRAN

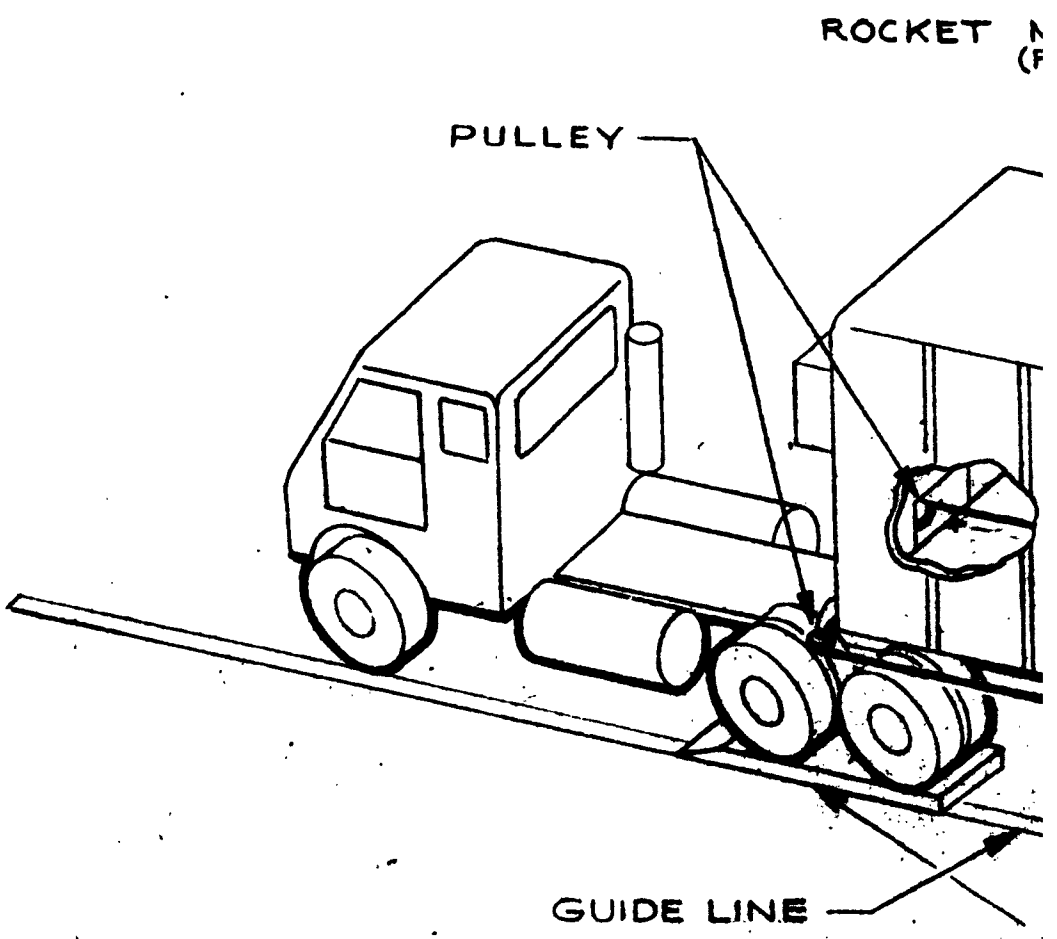


1

# TRANSFER FROM ROCKET MOTOR

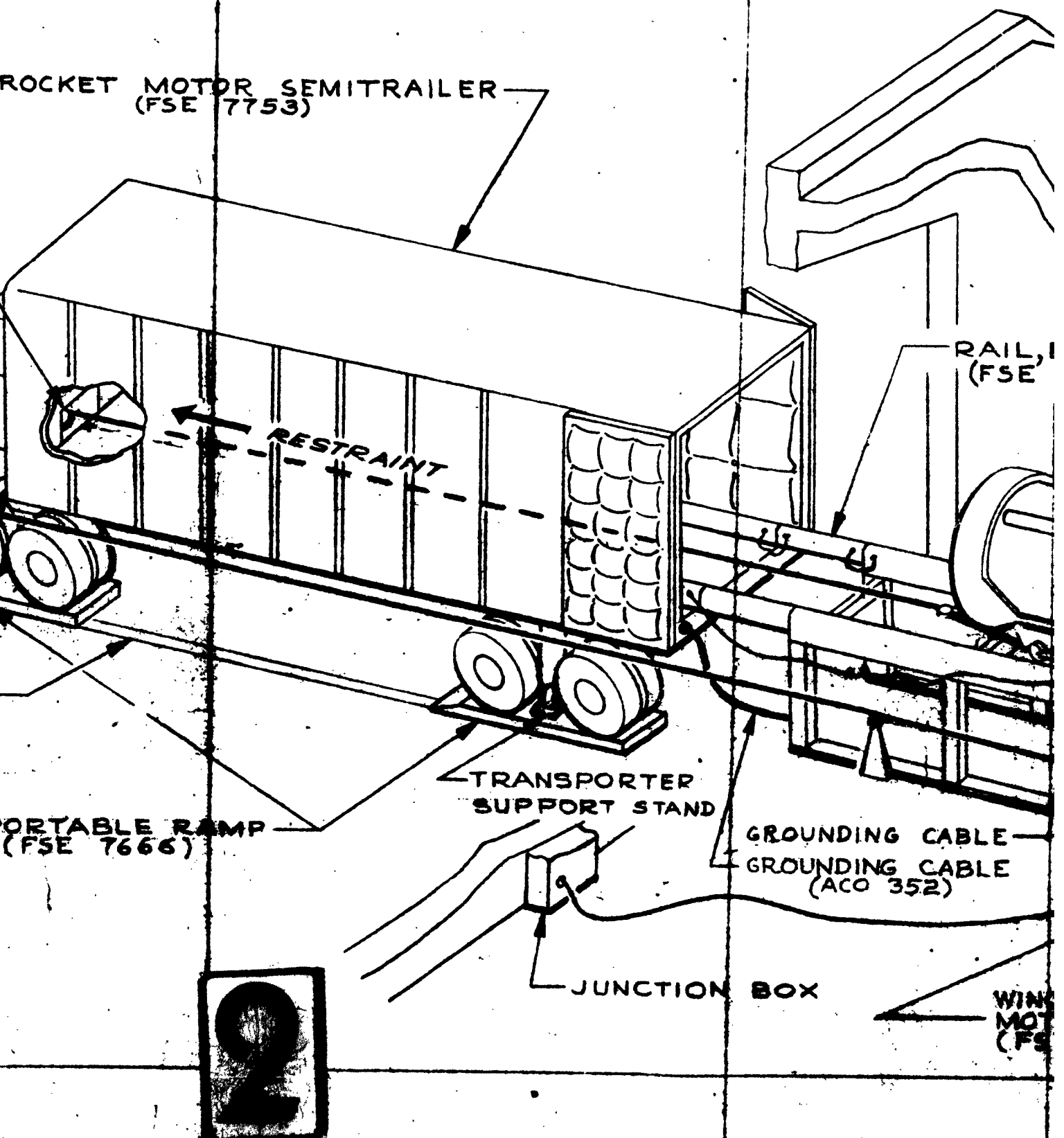

# OTOR TRUCK IN TO STORAGE BUILDIN

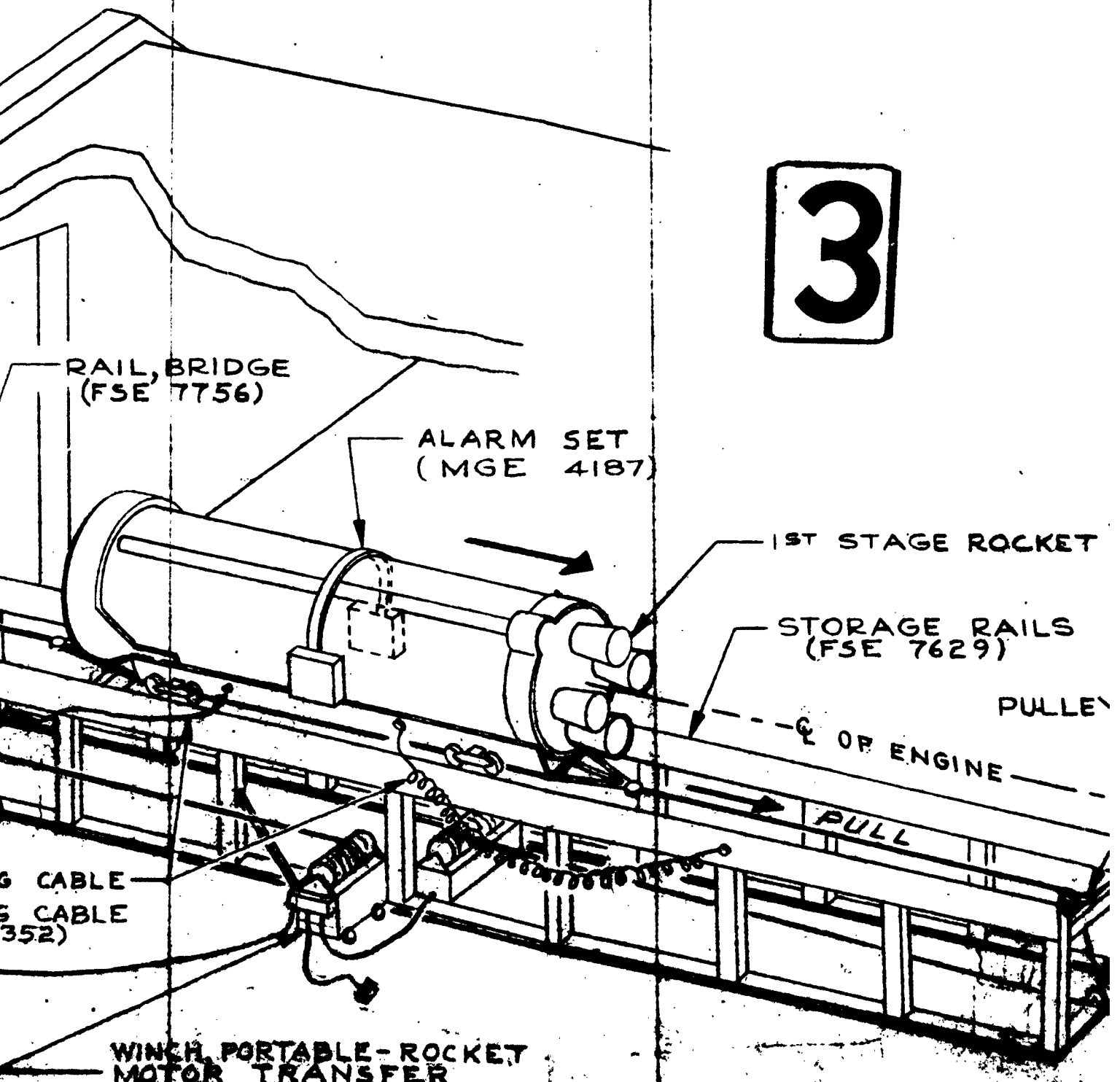


REVISED 11-15-61 8-31-61 5-15-61 2-1-62

BOEING VOL 1

# RUCK IN TO STORAGE BUILDING

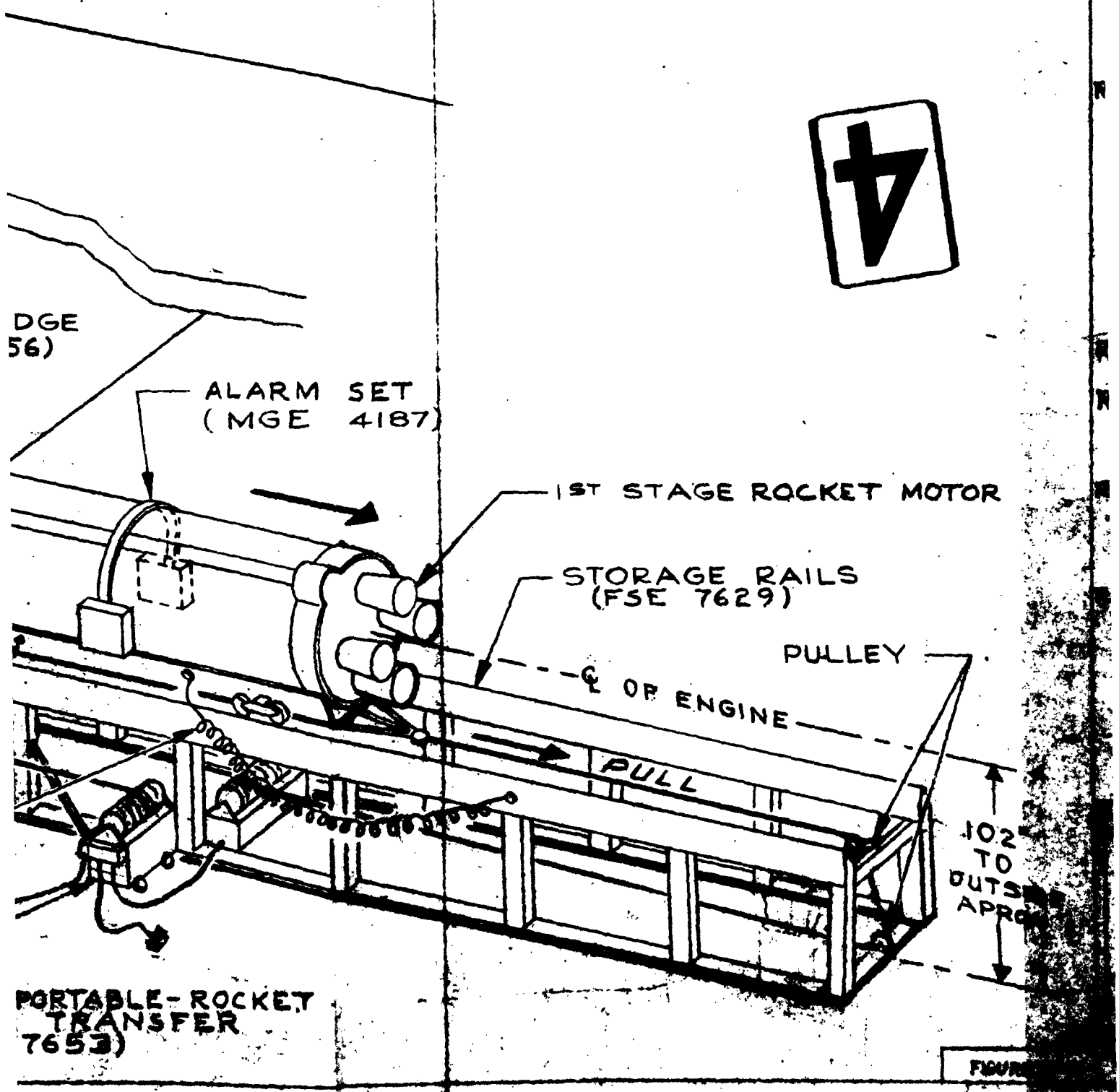


FIGUR

11-15-61 2-1-62
8-31-61
REVISED

BOEING | VOL 1 | NO D2-1116

# RUCK IN TO STORAGE BUILDING

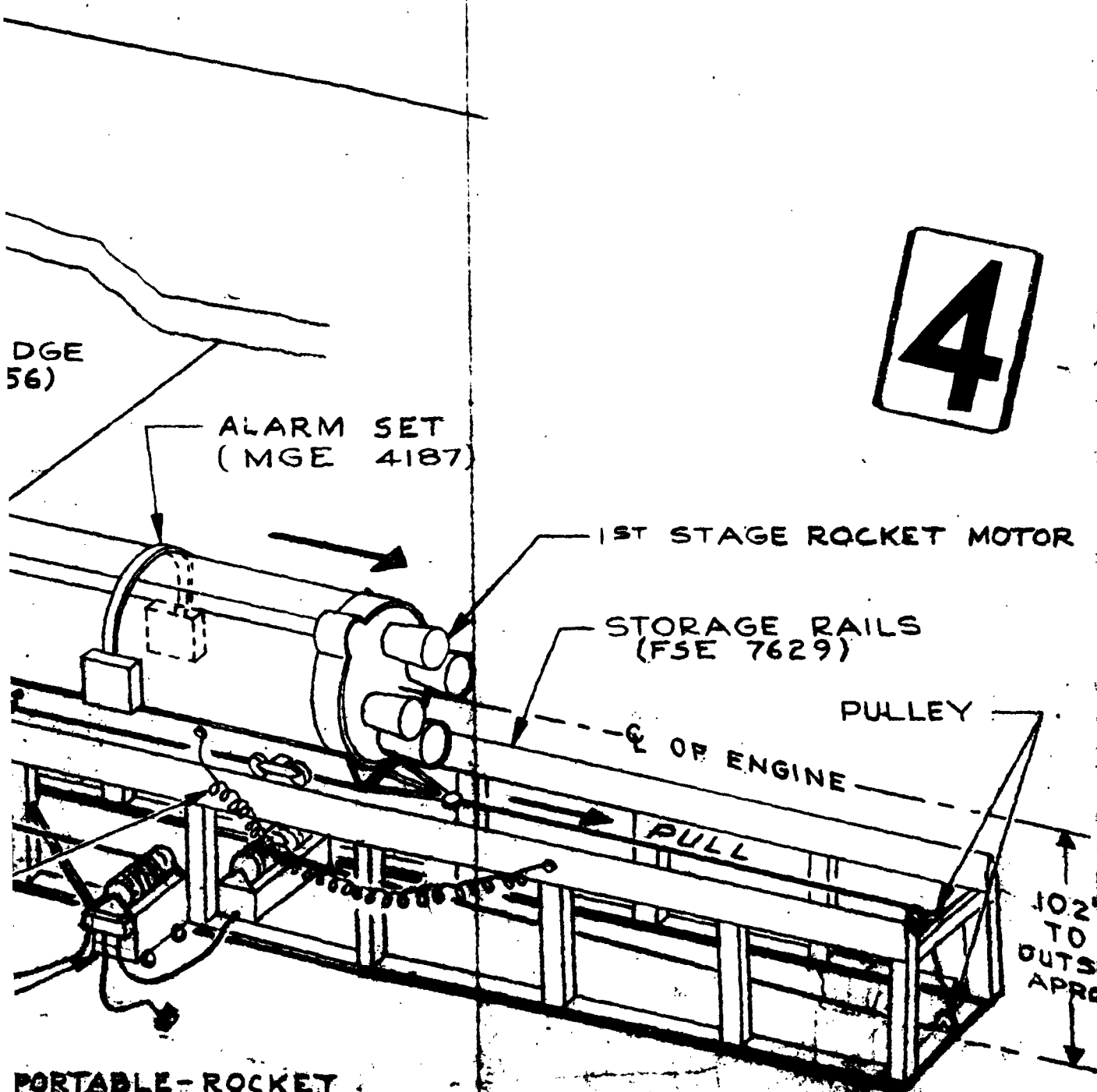


FIGURE

REVISED 11-15-61 2-1-62

# 2ND STAGE

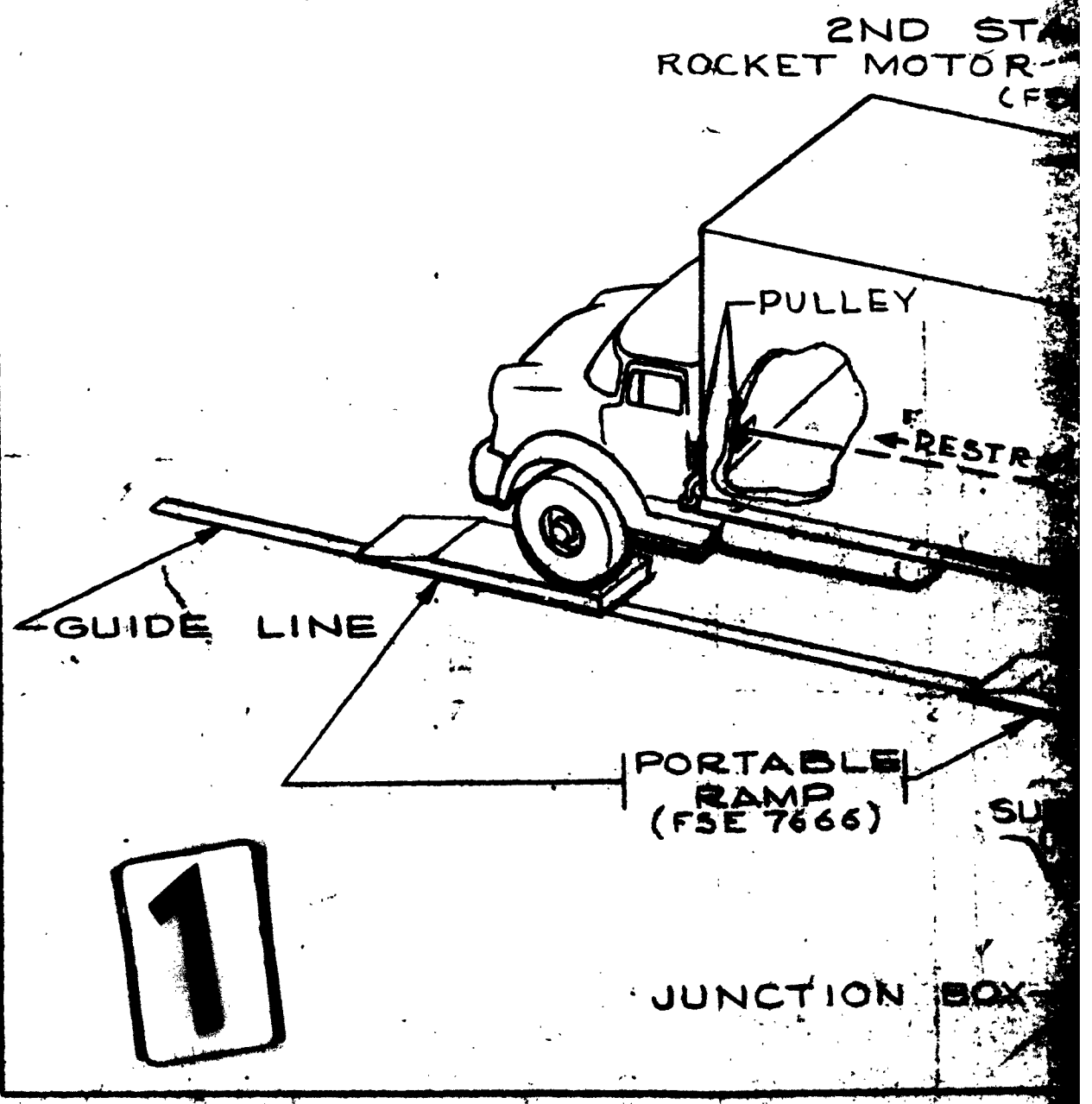
2ND ST
ROCKET MOTOR
(F
PULLEY
RESTR
GUIDE LINE
PORTABLE
RAMP
(FSE 7666)
SU
1
JUNCTION BOX

AGE TOR TRANSFER FROM ROCK
IN TO STORAGE BUILDING

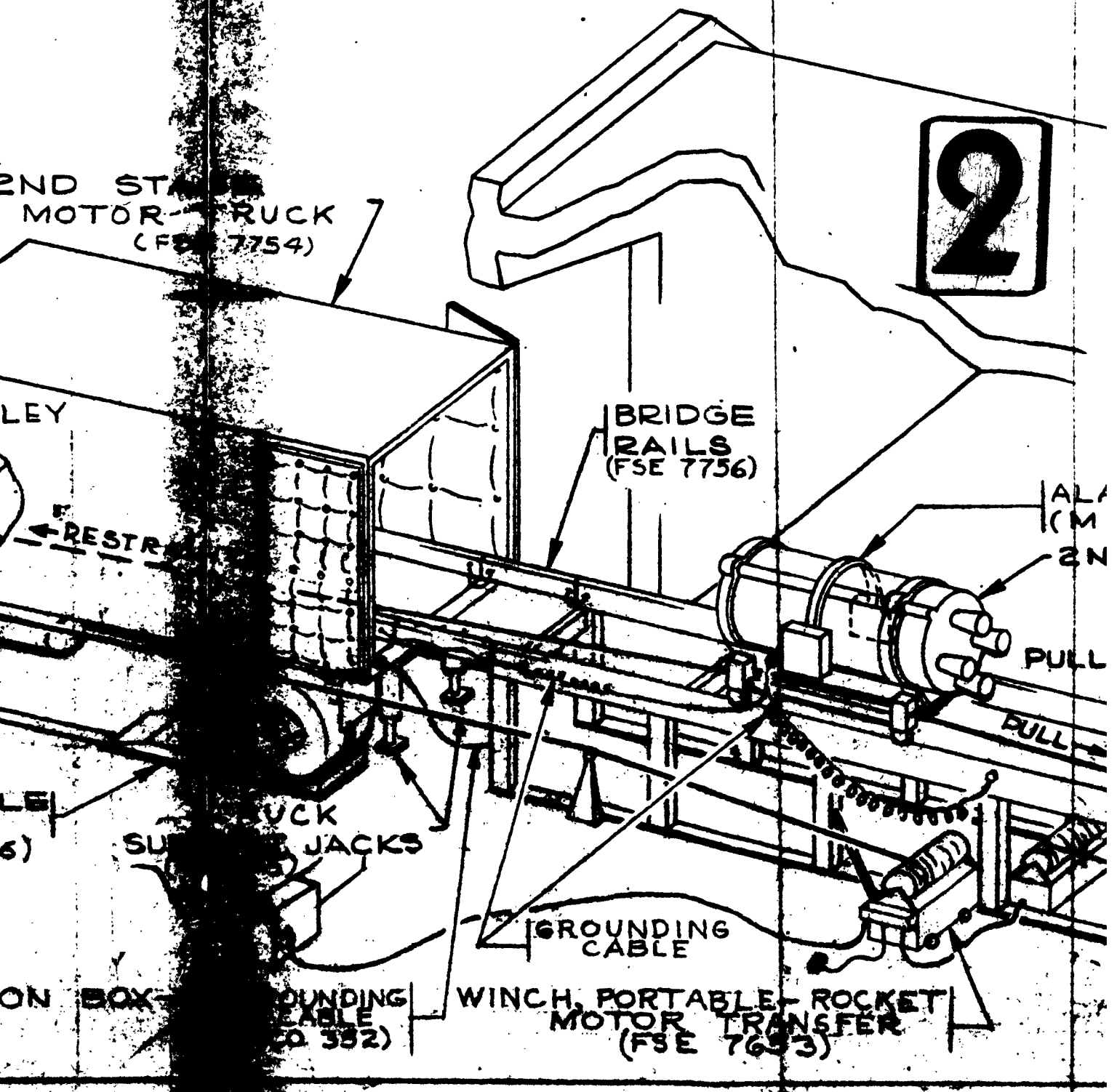

FROM ROCKET MOTOR TRUCK
GE BUILDING

3

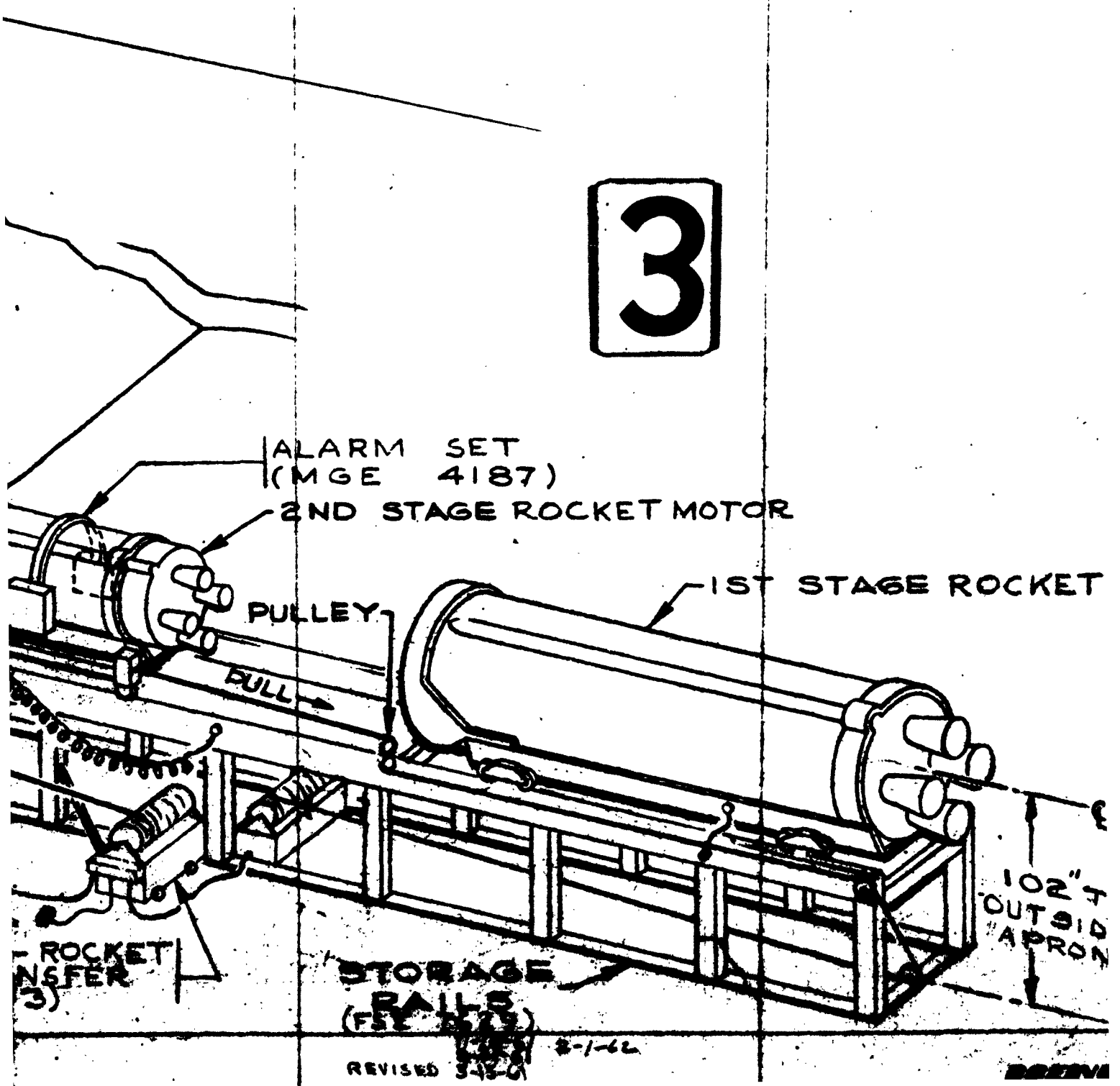

T MOTOR TRUCK

M SET
: 4187)
STAGE ROCKET MOTOR

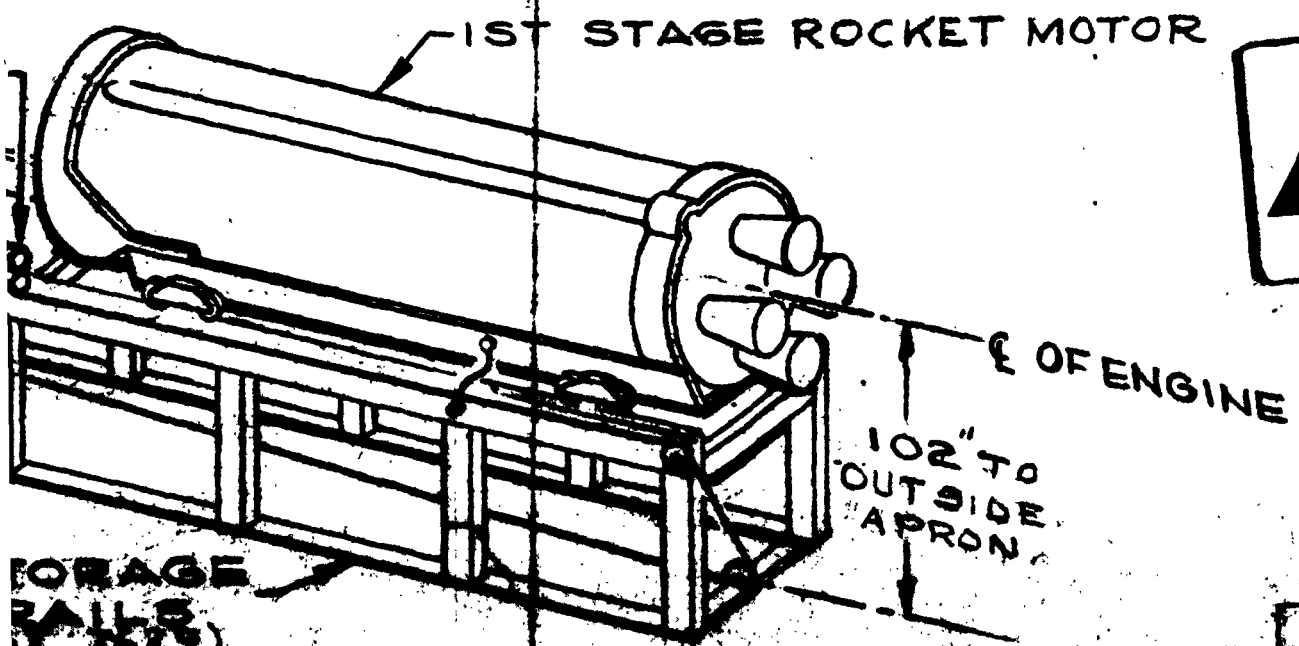


4

2-1-62
VISED 3-15-61

FIGUR

VOL 1 D2-11162

# 3RD. STAGE MOTO

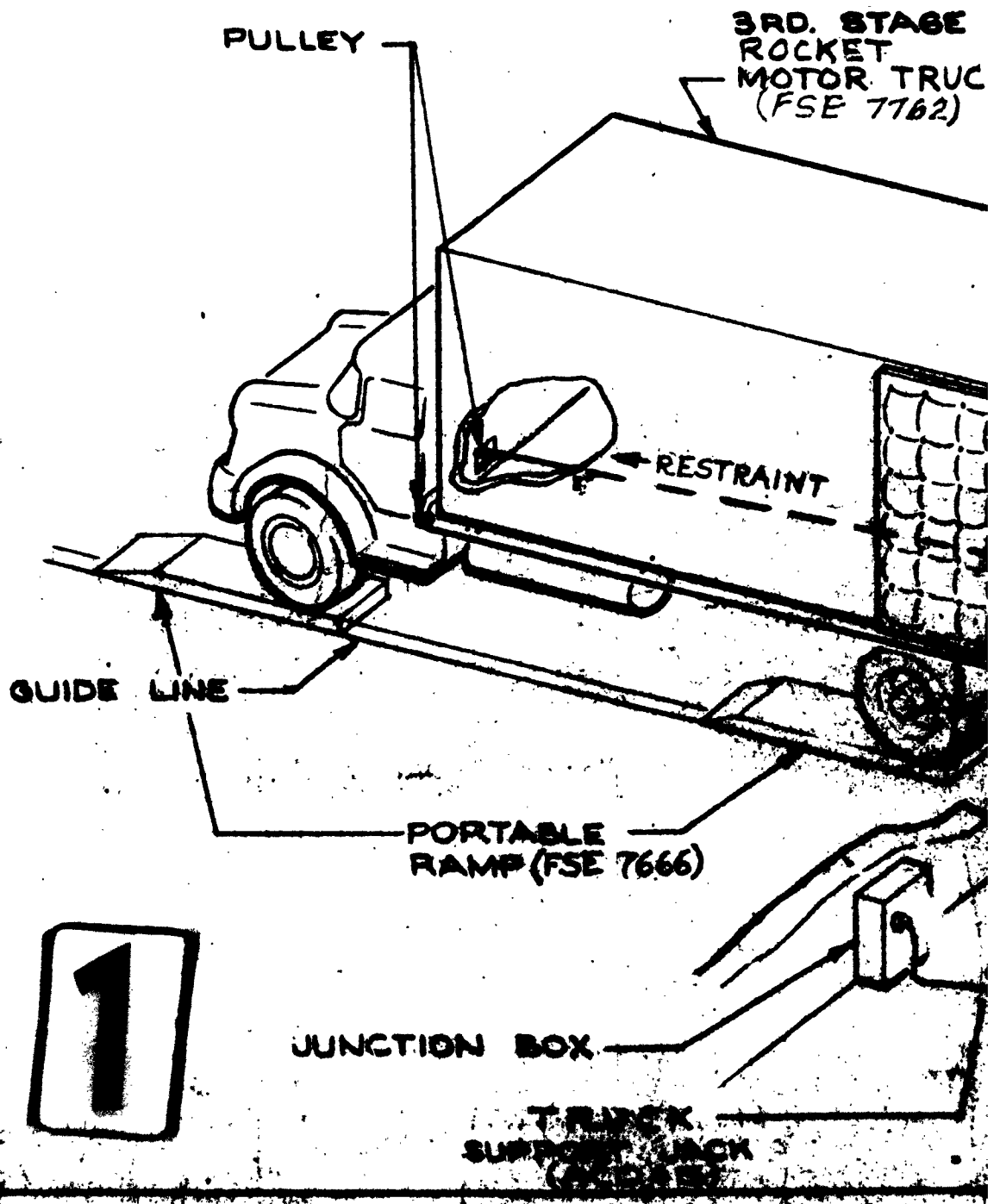


1

# MOTOR TRANSFER FROM ROCKET MOTO
# IN TO STORAGE BUILDING

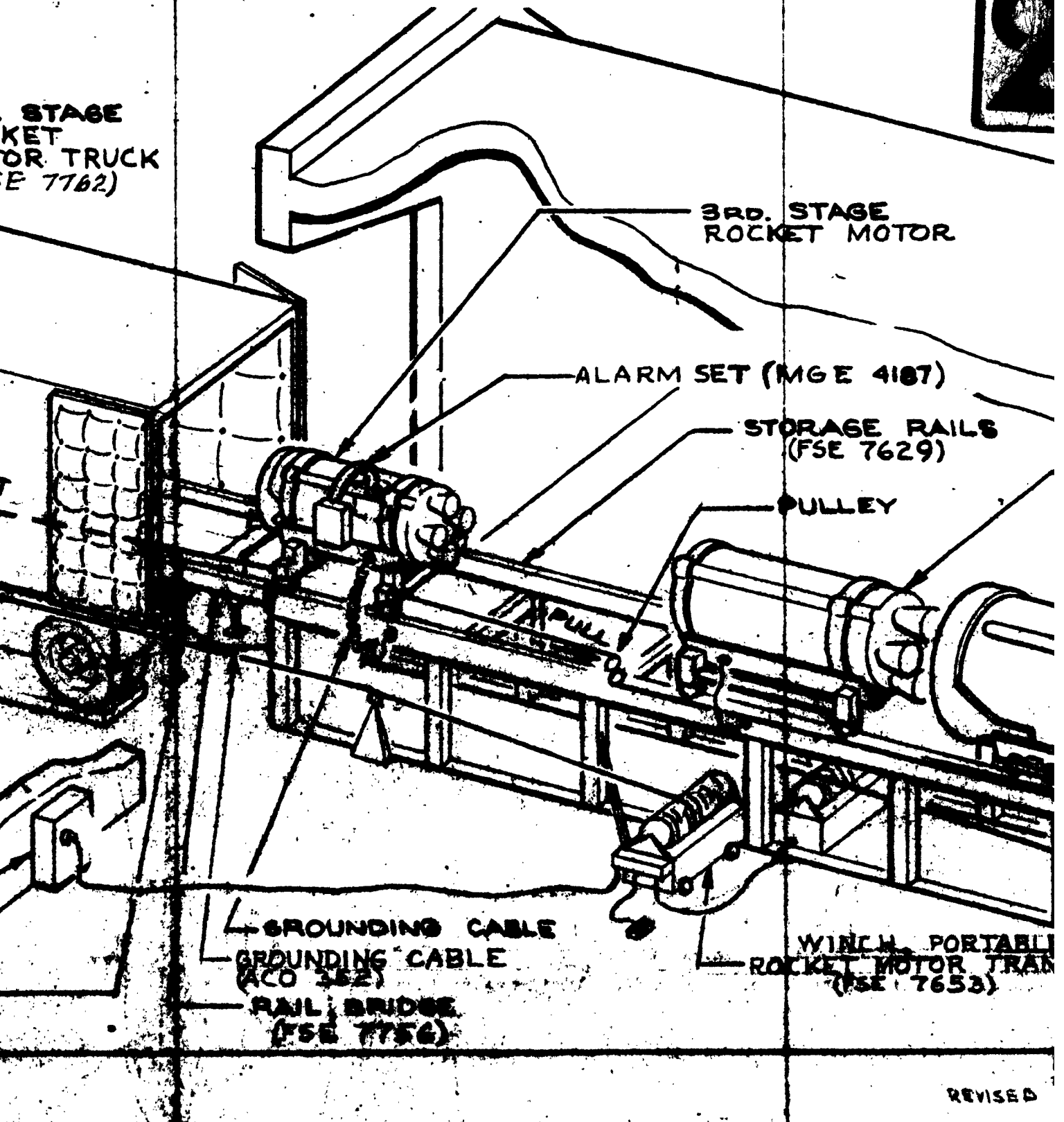


REVISED

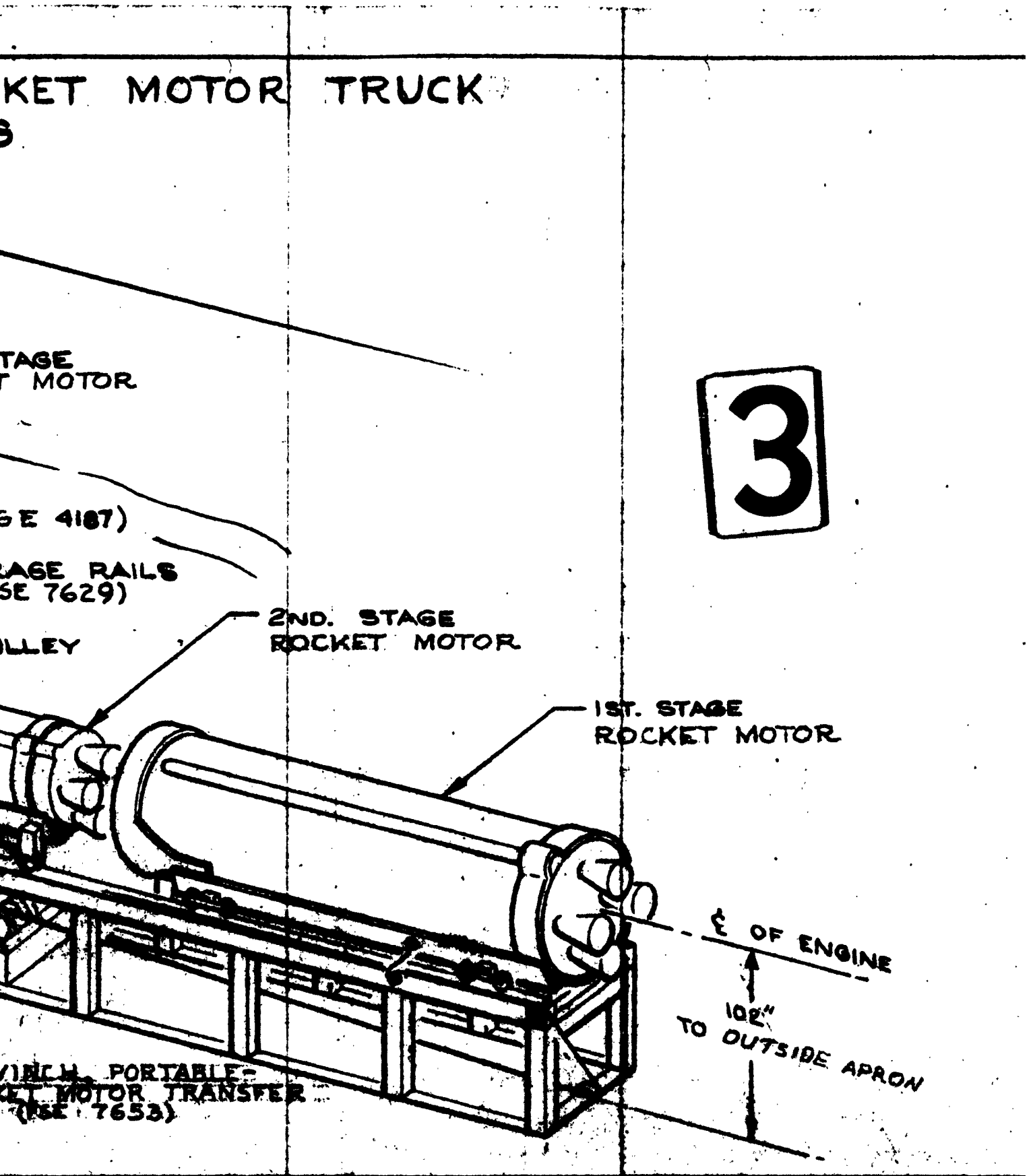


REVISED 5-15-61

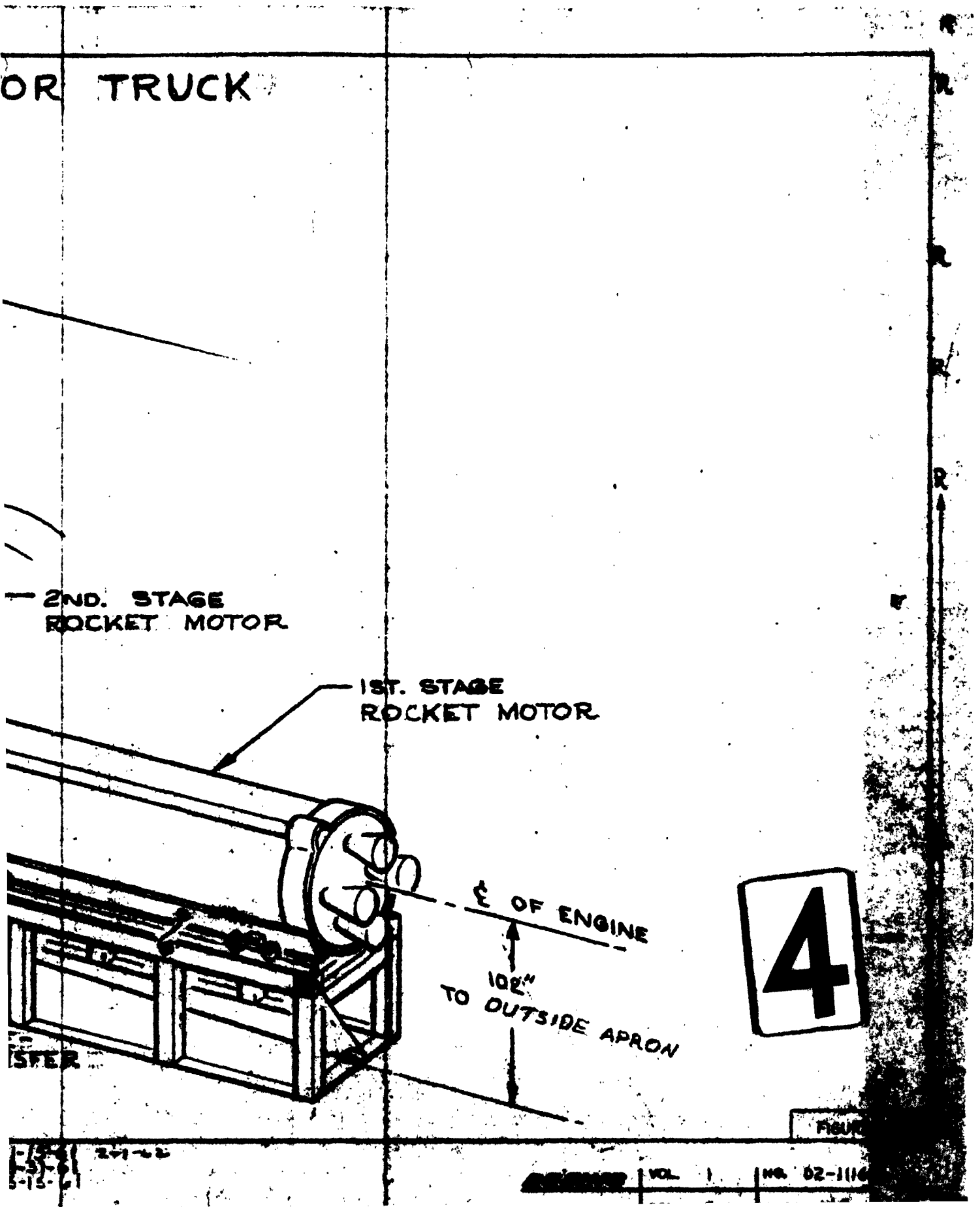
OR TRUCK
2ND. STAGE
ROCKET MOTOR
1ST. STAGE
ROCKET MOTOR
℄ OF ENGINE
102"
TO OUTSIDE APRON
4
SFER
VOL. 1
NO. 02-1116

## MISSILE ASSEMBLY BLDG.

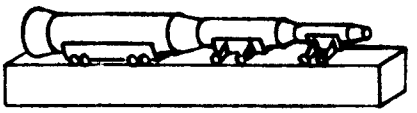

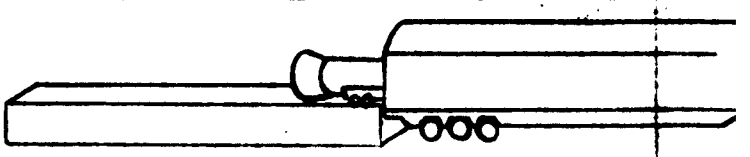

13.0 MISSILE HANDLING FOR SHIPMENT

13.1 PREPARE MISSILE FOR TRANSFER (ROLL)

13.2 TRANSFER MIS SSCBM

13.3 TRANSPORT STORAGE, AI LOADING AR

## STORAGE BL

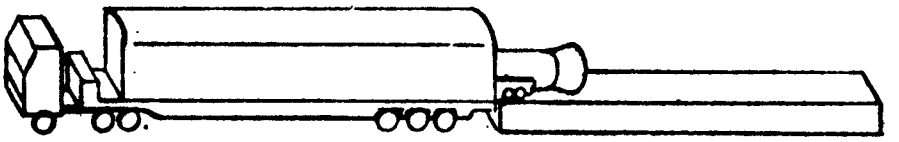

13.6 PREPARE FOR MISSILE TRANSFER TO STORAGE

13.7 TRANSFER MISSILE TO STORAGE RAILS

13.8 STORE AS REQUIRED.

13.8 P

13.10 T

1

# MISSILE SHIPMENT SEG

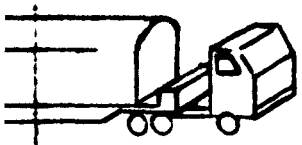

R MISSILE TO

RT TO MISSILE
, AIR OR RAIL
AREA

AIR

13.4 TI
(P

BLDG.

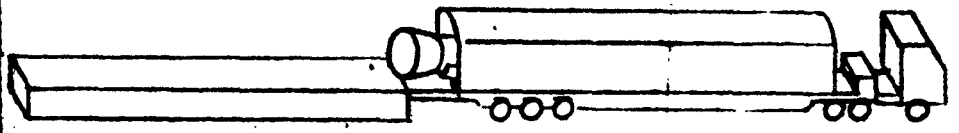

.9 PREPARE FOR MISSILE TRANSFER TO SSCBM

.10 TRANSFER MISSILE TO SSCBM FROM STORAGE

RAILR

13.5 TI
M

# EQUENCE

## AIRPLANE LOADING AREA

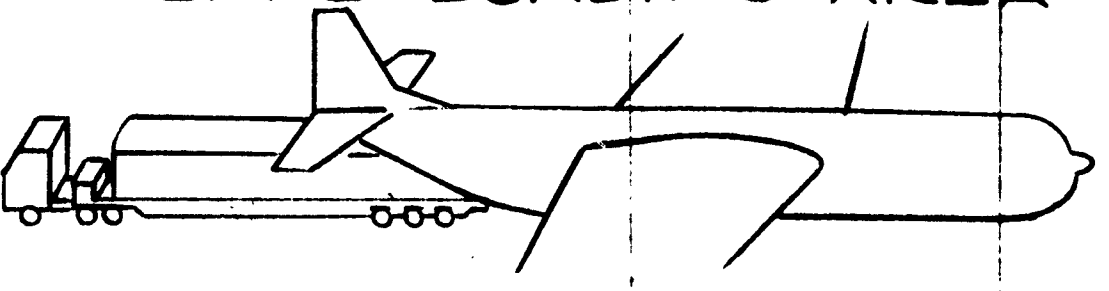

4 TRANSFER SSCBM TO AIRPLANE
(PERFORMED BY AIR FORCE)

GOV
SH

## AILROAD LOADING AREA

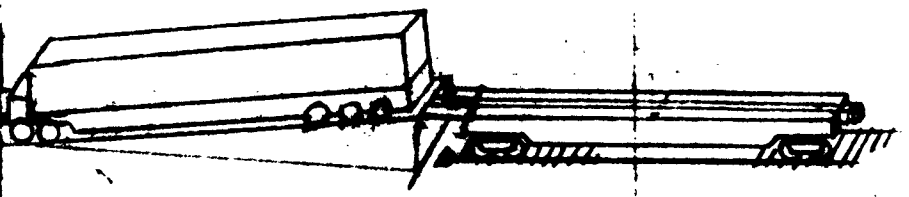

5 TRANSFER SSCBM & BALLISTIC
MISSILE TRAILER TO RAIL CAR

3

11-15-61
8-31-61
REVISED 8-15-61

BOEING | VOL

E

LOADING AREA

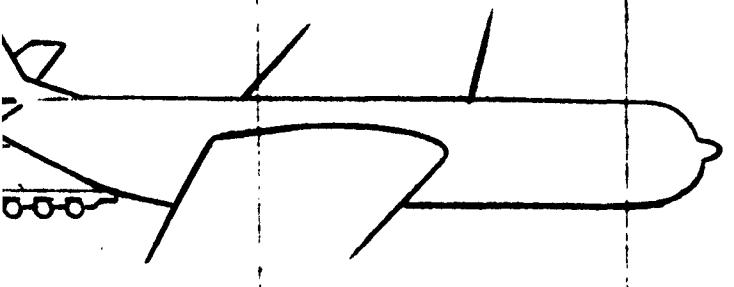

SSCBM TO AIRPLANE
BY AIR FORCE)

GOVERNMENT
SHIPMENT

ADING AREA

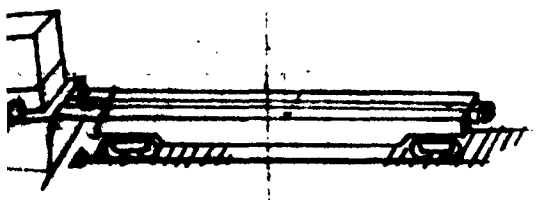

SSCBM & BALLISTIC
AILER TO RAIL CAR

4

FIGU

11-15-61
8-31-61
ED 8-15-61

MISSILE

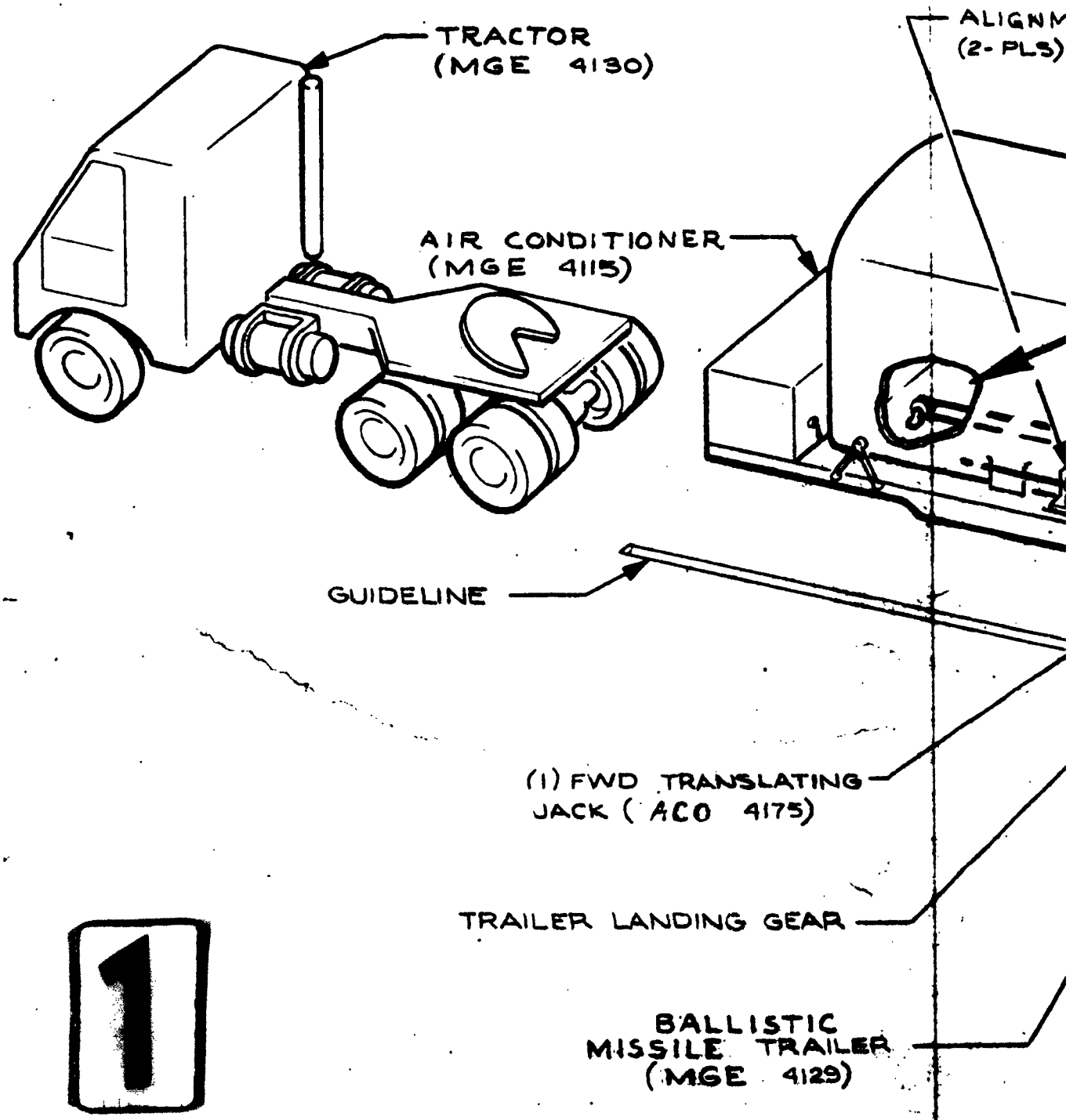
TRACTOR
(MGE 4130)
ALIGNM
(2-PLS)
AIR CONDITIONER
(MGE 4115)
GUIDELINE
(1) FWD TRANSLATING
JACK (ACO 4175)
TRAILER LANDING GEAR
BALLISTIC
MISSILE TRAILER
(MGE 4129)

1

# MISSILE TRANSFER FROM MISSILE ASSEM

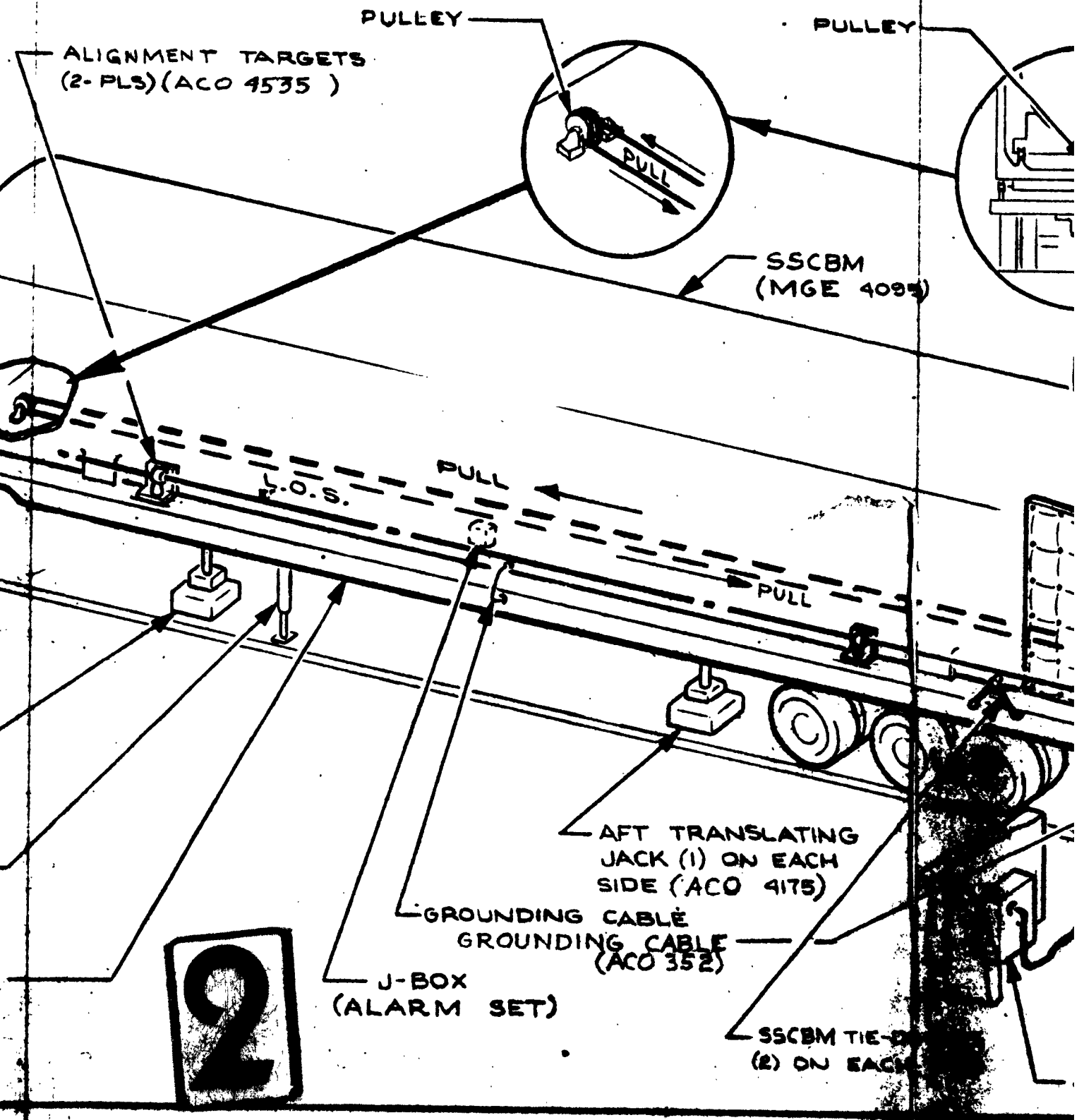

# EMBLY BUILDING IN TO SSCBM

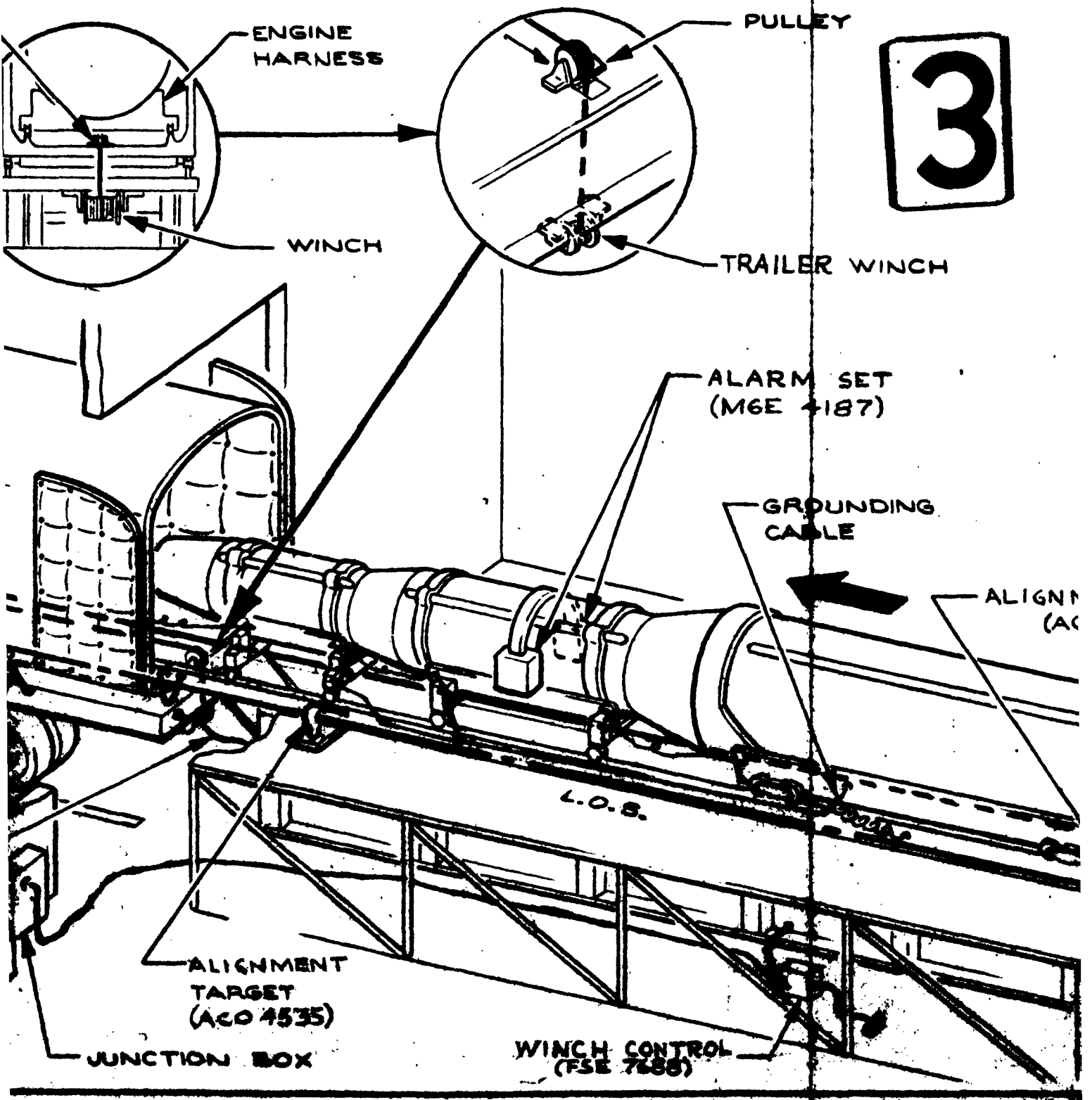


REVISED

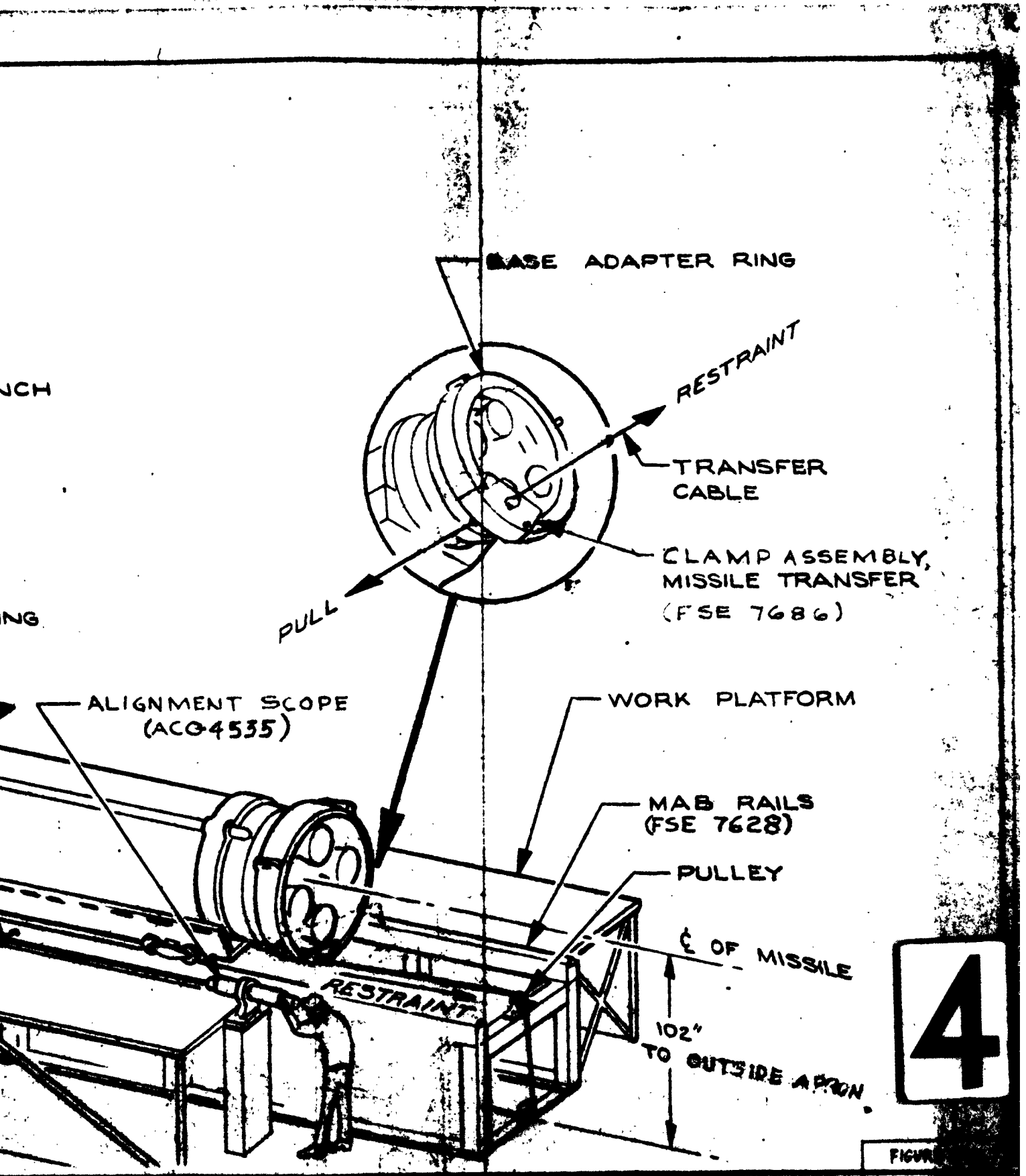
BASE ADAPTER RING
RESTRAINT
TRANSFER CABLE
CLAMP ASSEMBLY, MISSILE TRANSFER (FSE 7686)
PULL
ALIGNMENT SCOPE (ACG4535)
WORK PLATFORM
MAB RAILS (FSE 7628)
PULLEY
℄ OF MISSILE
RESTRAINT
102" TO OUTSIDE APRON
4

FIGURE

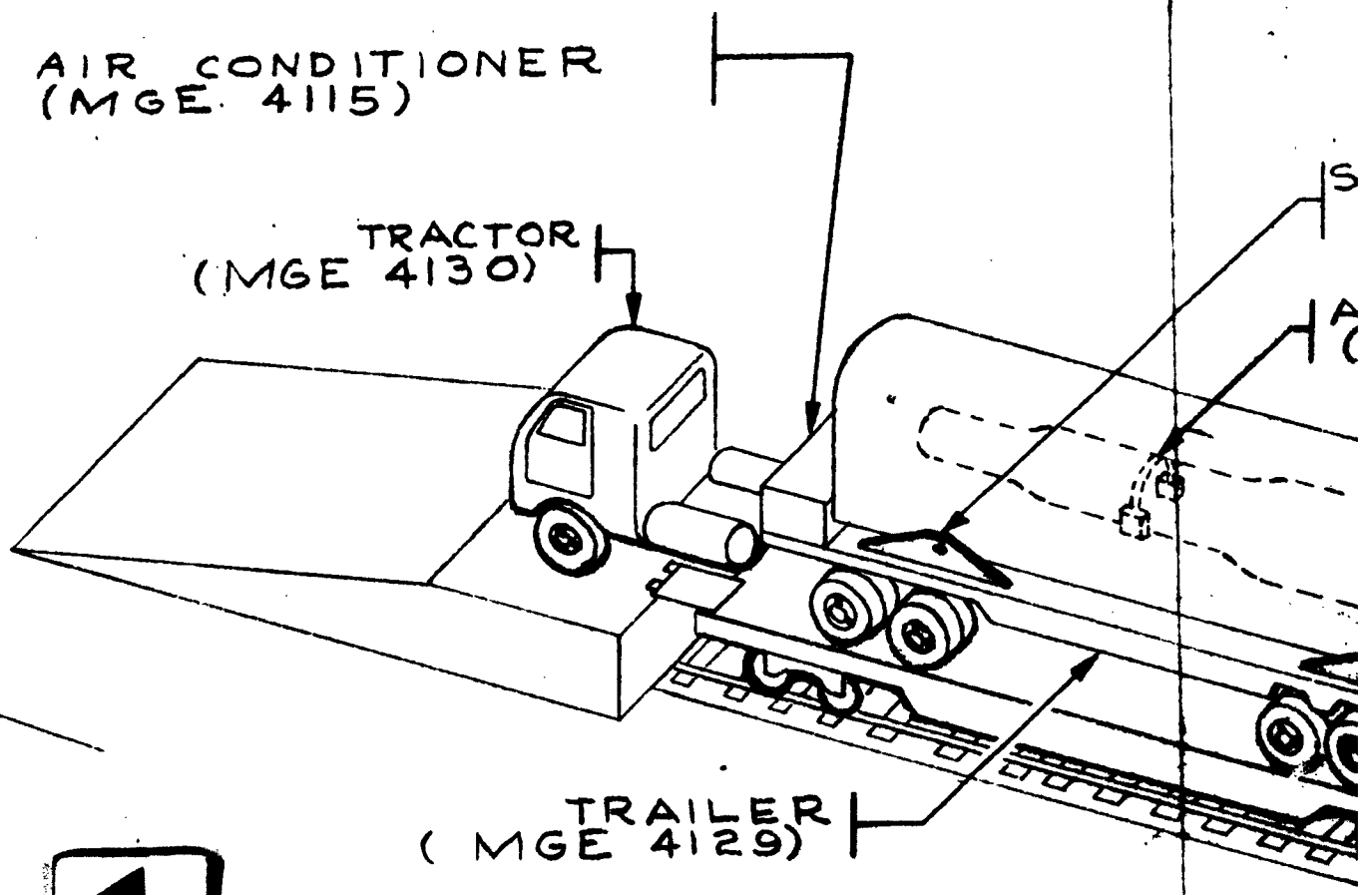


1

SSCBM AND TRAILER TRANSFER

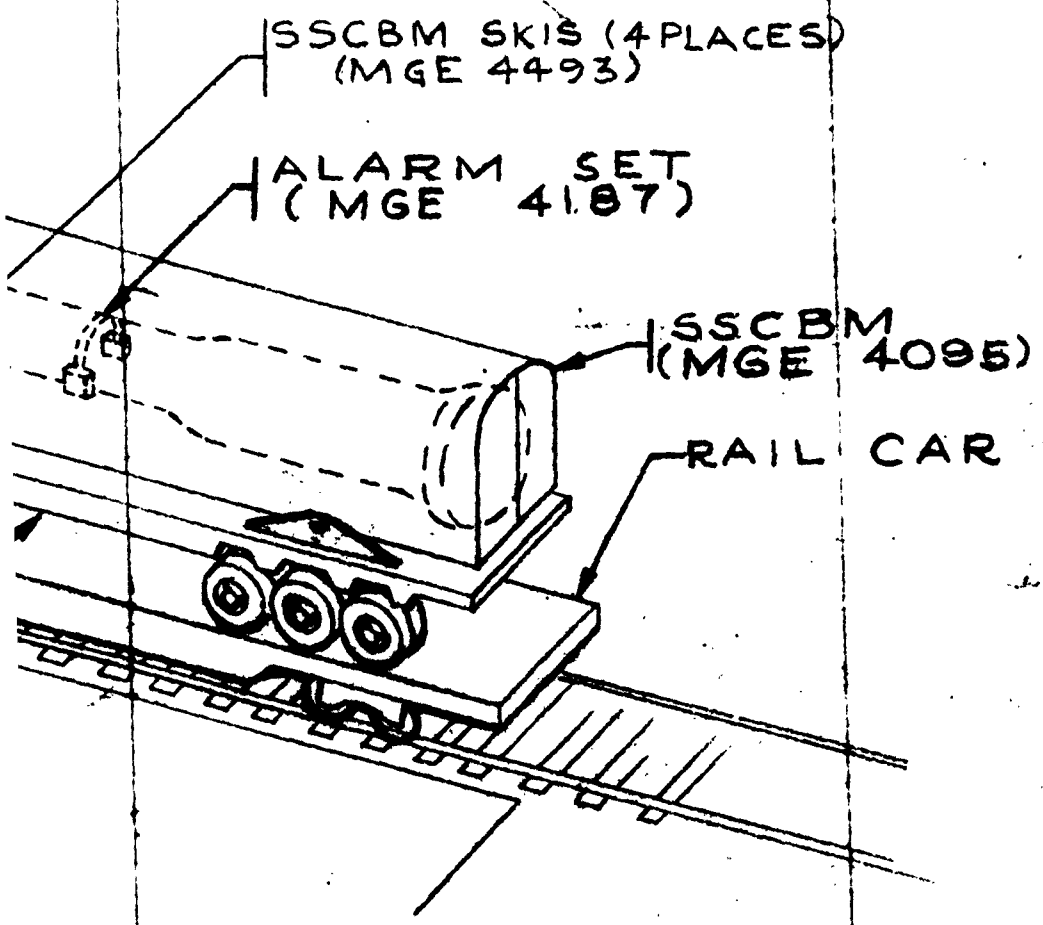


ANSFER ON TO RAIL CAR

2

FIGURE 10-3

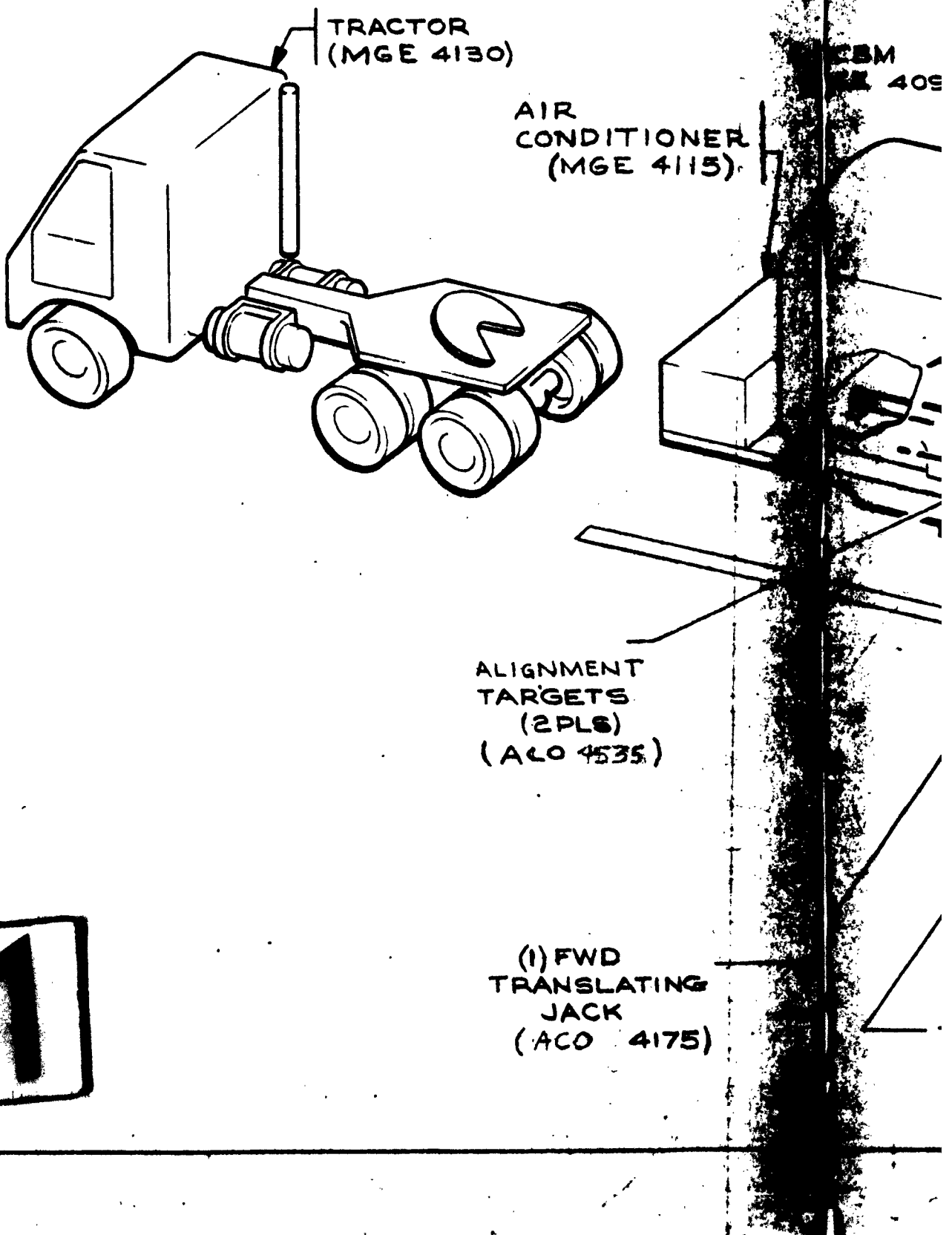
TRACTOR
(MGE 4130)
AIR
CONDITIONER
(MGE 4115)
ALIGNMENT
TARGETS
(2 PLS)
(ACO 4535)
(1) FWD
TRANSLATING
JACK
(ACO 4175)

1

# MISSILE TRANSFER FROM SSCBM

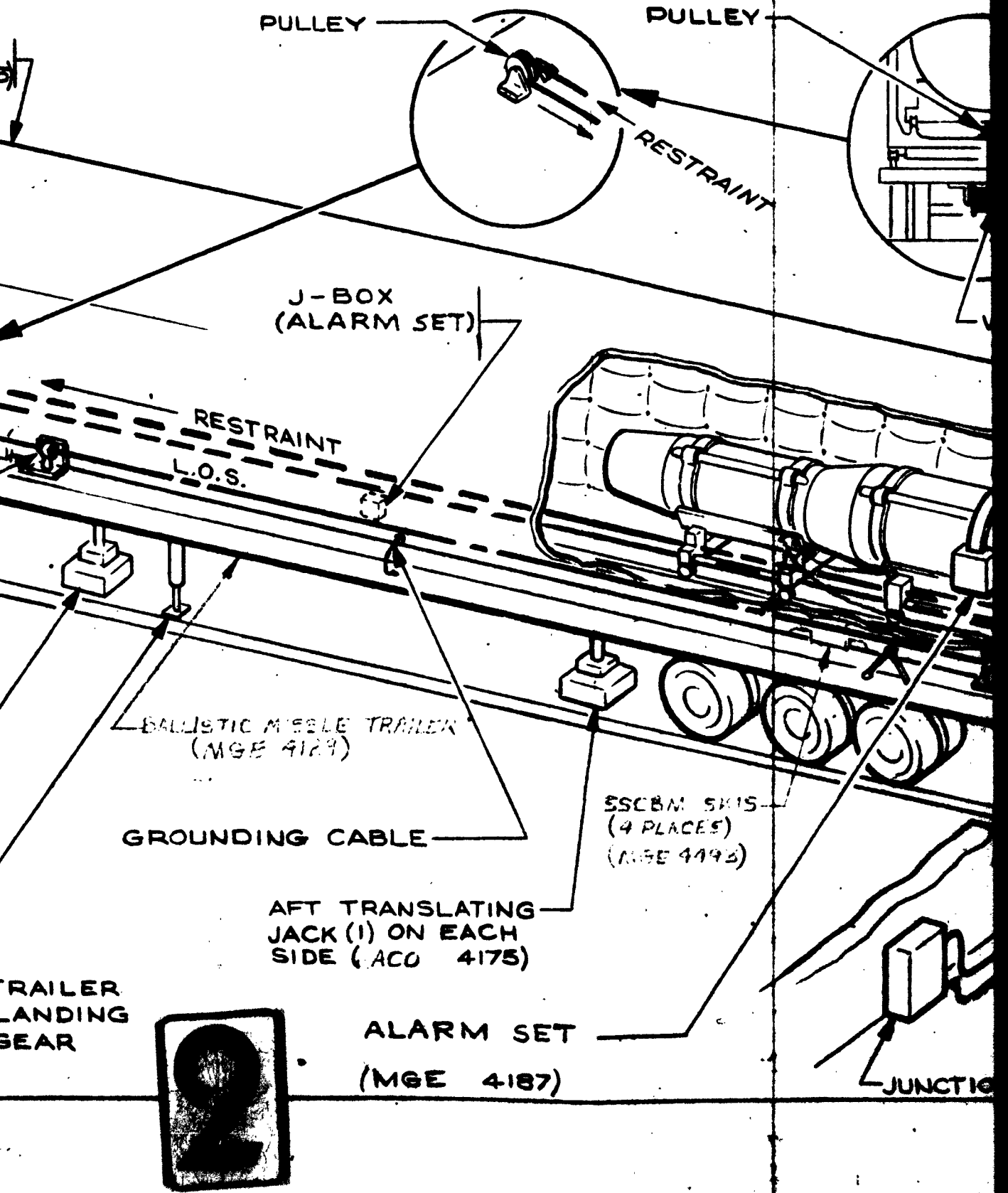

# SCBM IN TO STORAGE BLDG

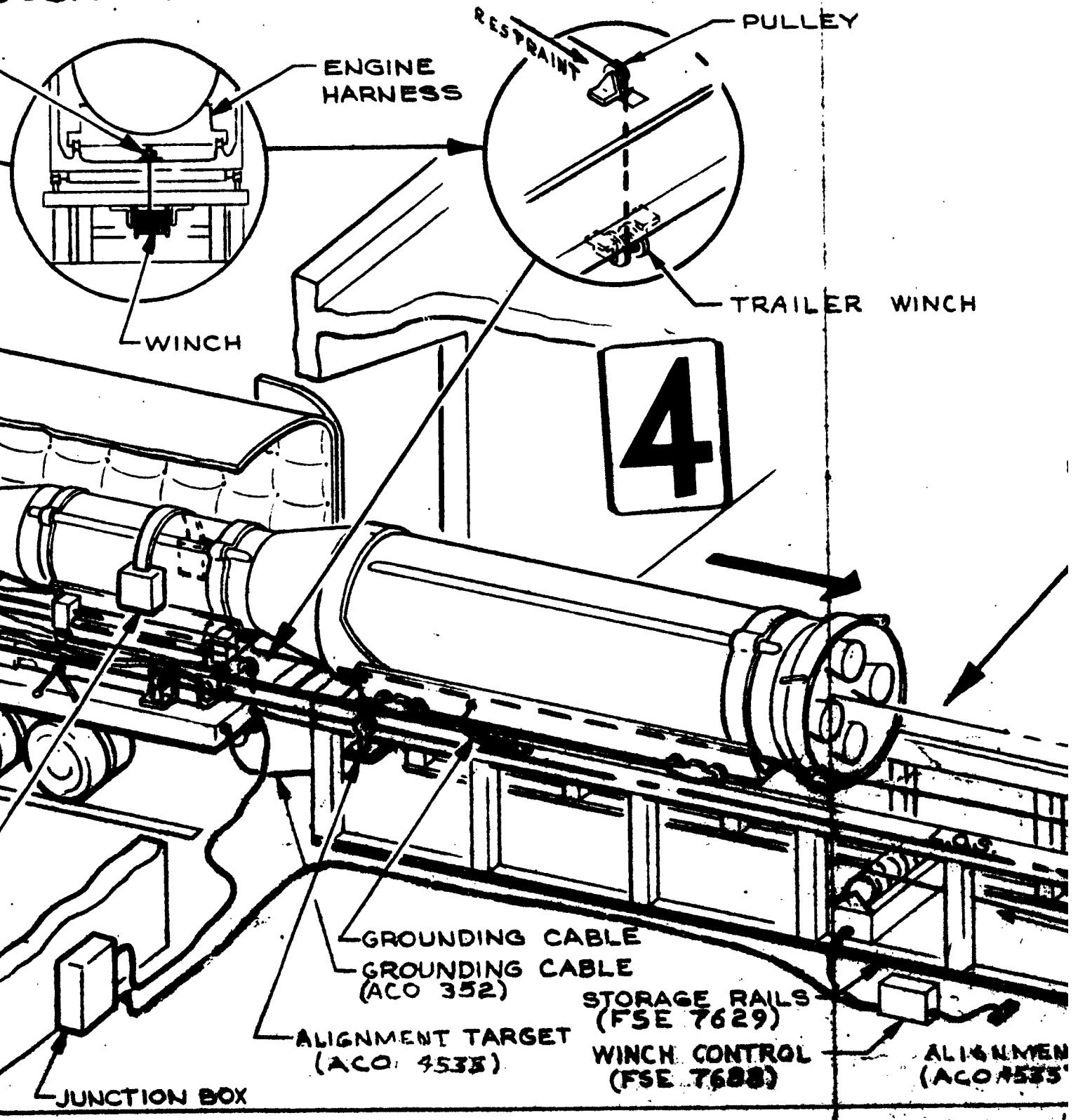


REVISED

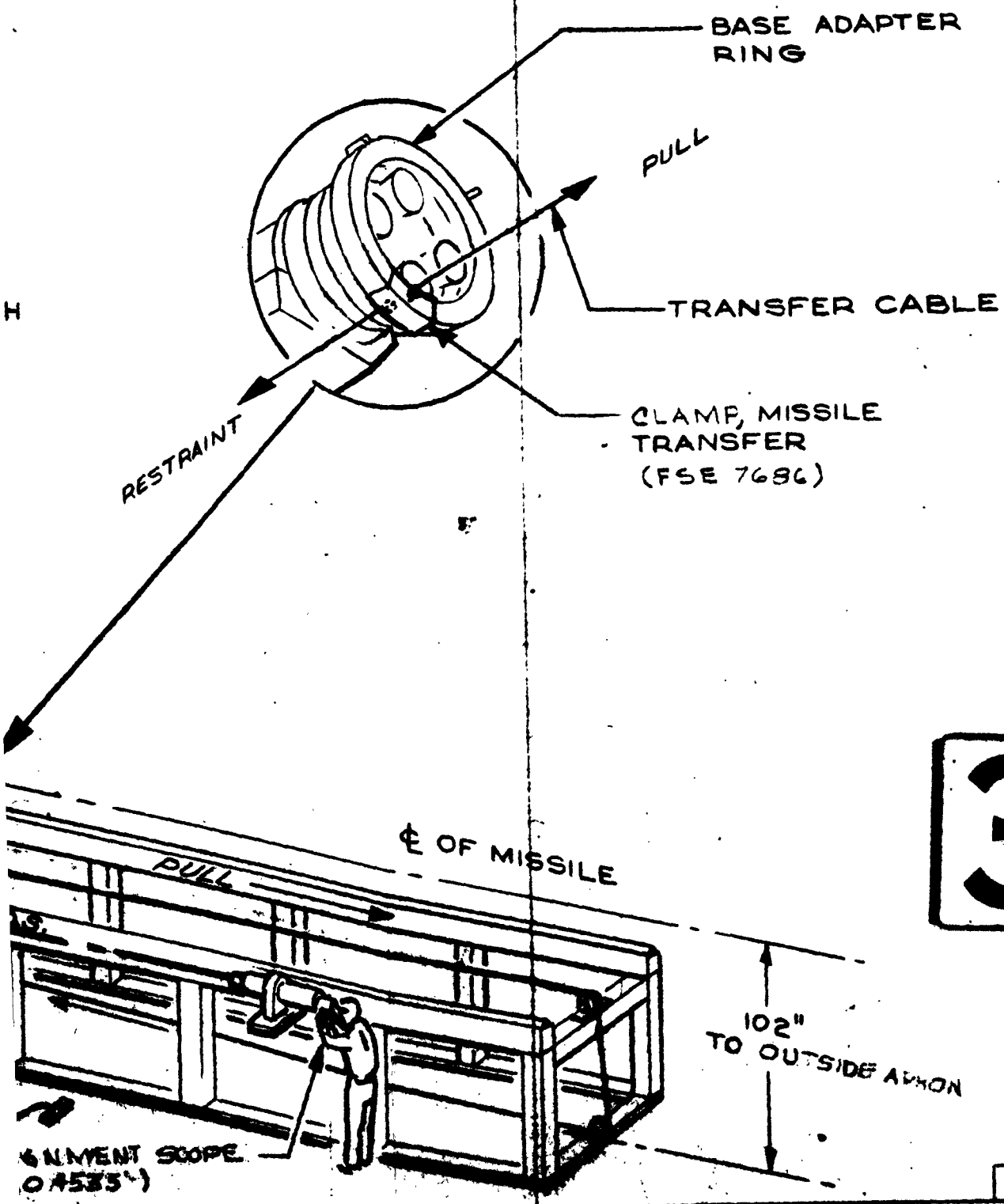


3

FIGURE

EVISED 11-15-61 8-31-61 5-15-61 2-1-62

VOL 1 NO D2-11/62

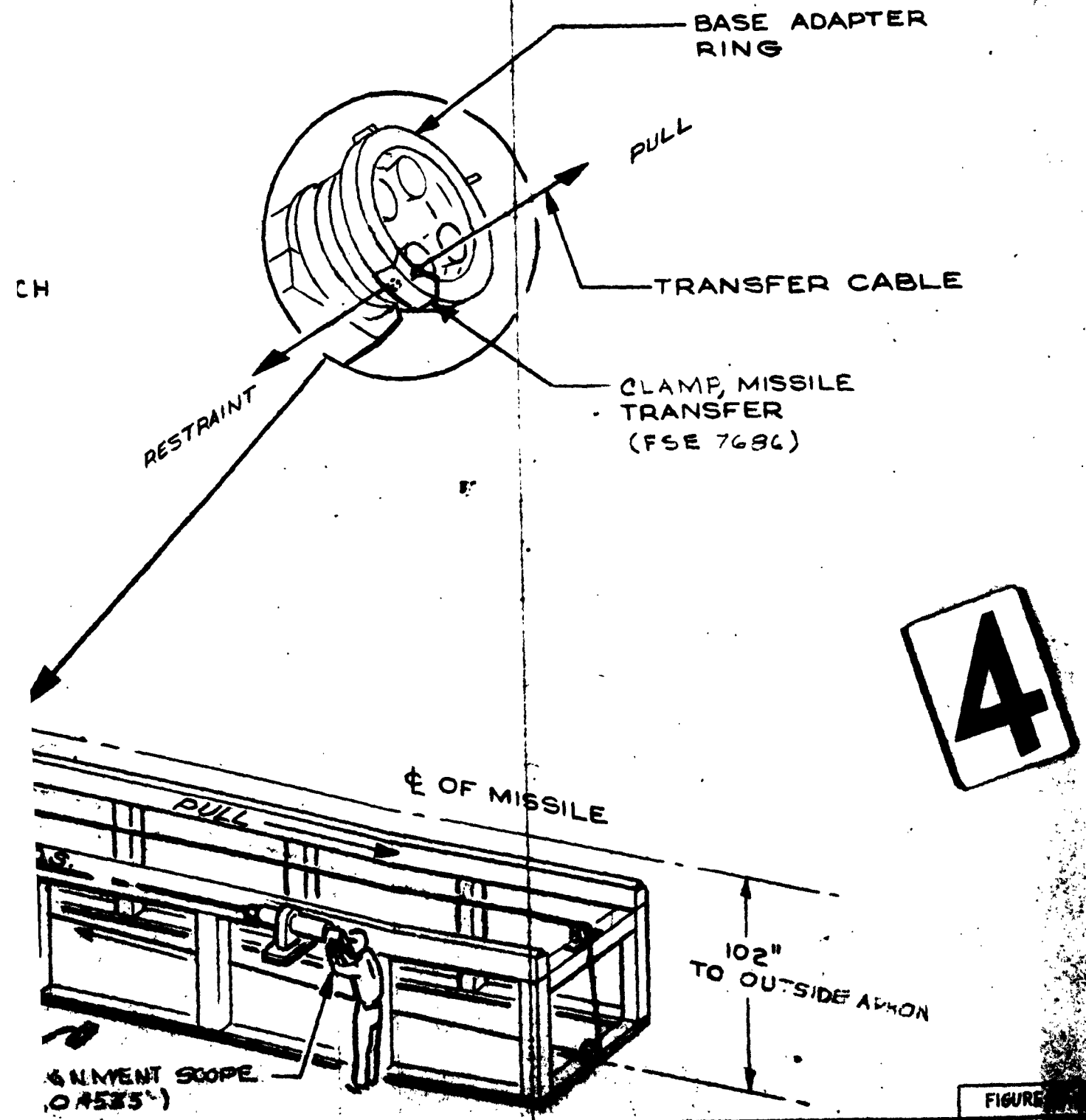


FIGURE

EVISED 11-15-61
8-31-61
3-15-61
2-1-62

VOL 1 | NO D2-11/62

# SSCBM TRANSIENT STORAGE AREA

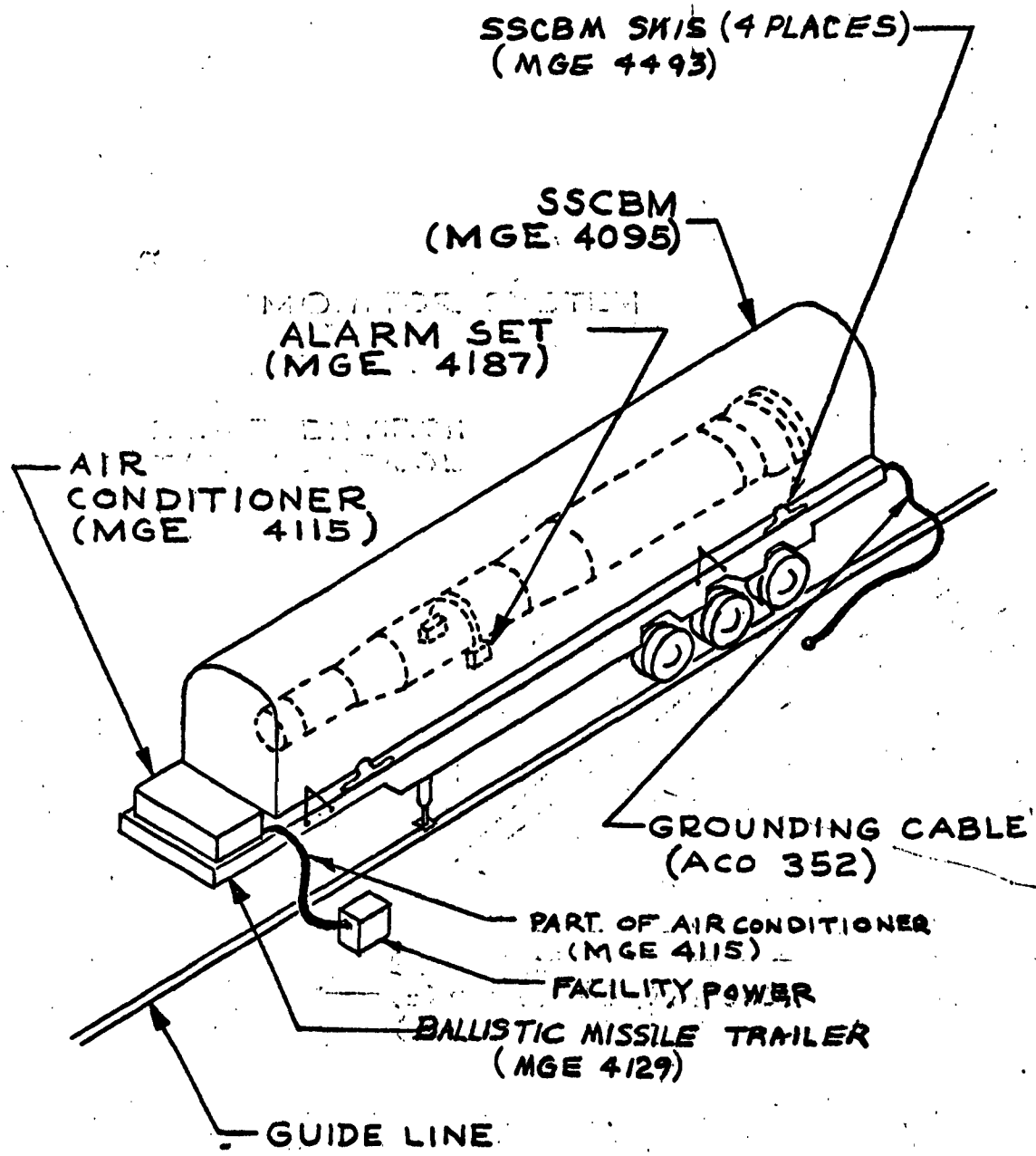


FIGURE 21-B

137

BOEING AIRPLANE COMPANY

NUMBER D2-11162 MODEL NO. WS-133A

TITLE SECTION "C" - FACTORY SUPPORT EQUIPMENT AND MAINTENANCE GROUND EQUIPMENT ASSEMBLY AND CHECKOUT - A/F PLANT 77

PREPARED BY Plant 77 Requirements Unit 5-15-61

SUPERVISED BY O.A. Severide 5/16/61

APPROVED BY A.C. Borlin 5/17

Approved by W.H. Charlot (DATE) 9-11-61

5-78200-5120-68145

CHARGE NUMBER

139

REVISED 11-15-61 8-31-61

MAY 15 1961

SECTION TITLE PAGE

VOL. | NO. D2-11162

SEC. C | PAGE 1

BAC 4131 B

3-7000

1374

# ACTIVE-CHANGED PAGE

| ACTIVE | | | CHANGED | | | | | ACTIVE | | | CHANGED | | | | |
|---|---|---|---|---|---|---|---|---|---|---|---|---|---|---|---|
| SECTION | PAGE | DATE | SECTION | PAGE REVISED | PAGE ADDED | PAGE DELETED | DATE | SECTION | PAGE | DATE | SECTION | PAGE REVISED | PAGE ADDED | PAGE DELETED | DATE |
| C | 1 | 11-15-61 | C | COMPLETE REVISION | | | 8-31-61 | C | 43 | 9-15-63 | C | 2 | 35a | | 6-1-62 |
| | 2 | 4-15-63 | | | | | | | 44 | 9-14-62 | | 5 | 47a | | |
| | 2a | 4-15-63 | | | 20a | | | | 45 | 10-22-62 | | 8 | 57 | | |
| | 3 | 8-17-62 | | | 32a | | | | 46 | 6-1-62 | | 11 | | | |
| | 4 | 11-15-61 | | | | | | | 47 | C | | 12 | | | |
| | 5 | 6-1-62 | C | | 47a | | 8-31-61 | | 47a | 6-1-62 | | 14 | | | |
| | 6 | 1-12-62 | | | | | | | 48 | 8-17-62 | | 15 | | | |
| | 7 | 1-12-62 | C | COMPLETE REVISION | | | 11-15-61 | | 49 | 8-14-62 | | 16 | | | |
| | 8 | 6-1-62 | | | | | | | 50 | 10-22-62 | | 19 | | | |
| | 9 | 1-12-62 | | | 51 | 20a | | | 51 | 8-17-62 | | 21 | | | |
| | 10 | 2-1-62 | | | | 32a | | | 52 | 4-15-63 | | 22 | | | |
| | 11 | 10-22-62 | | | | 47a | | | 53 | 1-11-63 | | 23 | | | |
| | 12 | 6-1-62 | C | | 56 | | 11-15-61 | | 54 | 8-17-62 | | 25 | | | |
| | 13 | 1-12-62 | | | | | | | 55 | 1-11-63 | | 26 | | | |
| | 14 | 6-1-62 | C | 2 | | | 1-12-62 | | 56 | 1-11-63 | | 27 | | | |
| | 15 | 6-1-62 | | 3 | | | | C | 57 | 6-1-62 | | 29 | | | |
| | 16 | 6-1-62 | | 5 | | | | | | | | 30 | | | |
| | 17 | 9-17-62 | | | | | | | | | | 32 | | | |
| | 18 | 8-17-62 | | | | | | | | | | 33 | | | |
| | 19 | 6-1-62 | | 45 | | | | | | | | 34 | | | |
| | 20 | 1-12-62 | | 48 | | | | | | | | 35 | | | |
| | 21 | 6-1-62 | | | | | | | | | | 36 | | | |
| | 22 | 6-1-62 | | | | | | | | | | 37 | | | |
| | 23 | 9-15-63 | C | 56 | | | 1-12-62 | | | | | 39 | | | |
| | 24 | 1-12-62 | | | | | | | | | | 40 | | | |
| | 25 | 6-1-62 | C | 2 | | | 2-1-62 | | | | | 41 | | | |
| | 26 | 6-1-62 | | 10 | | | | | | | | 42 | | | |
| | 27 | 6-1-62 | | 11 | | | | | | | | 43 | | | |
| | 28 | 7-13-62 | | 12 | | | | | | | | 44 | | | |
| | 29 | 9-14-62 | | 21 | | | | | | | | 45 | | | |
| | 30 | 6-1-62 | | 22 | | | | | | | | 46 | | | |
| | 31 | 10-22-62 | | 23 | | | | | | | | 47 | | | |
| | 32 | 6-1-62 | | 25 | | | | | | | | 49 | | | |
| | 33 | 10-22-62 | | 27 | | | | | | | | 50 | | | |
| | 34 | 9-14-62 | | 28 | | | | | | | | 51 | | | |
| | 35 | 10-22-62 | | 29 | | | | | | | | 52 | | | |
| | 35a | 10-22-62 | | 33 | | | | | | | | 53 | | | |
| | 36 | 9-14-62 | | 34 | | | | | | | | 54 | | | |
| | 37 | | | 36 | | | | | | | | 55 | | | |
| | 38 | 7-13-62 | | THRU 45 | | | | | | | C | 56 | | | 6-1-62 |
| | 39 | 6-1-62 | | 48 | | | | | | | C | 2 | | | 7-13-62 |
| | 40 | 9-14-62 | | 50 | | | | | | | | 23 | | | |
| | 41 | 6-1-62 | | 51 | | | | | | | | 24 | | | |
| | 42 | 8-17-62 | | 52 | | | | | | | | 25 | | | |
| | | | | 53 | | | | | | | | 26 | | | |
| | | | | 54 | | | | | | | | 50 | | | |
| | | | | 55 | | | | | | | | 52 | | | |
| | | | | | | | | | | | | 53 | | | |
| | | | | | | | | | | | C | 56 | | | 7-13-62 |

REVISED 4-15-63

U3 4200 1000 (WAS BAC 5131 C)

# ACTIVE-CHANGED PAGE

| ACTIVE | | | CHANGED | | | | | ACTIVE | | | CHANGED | | | | |
|---|---|---|---|---|---|---|---|---|---|---|---|---|---|---|---|
| SECTION | PAGE | DATE | SECTION | PAGE REVISED | PAGE ADDED | PAGE DELETED | DATE | SECTION | PAGE | DATE | SECTION | PAGE REVISED | PAGE ADDED | PAGE DELETED | DATE |
| | | | C | 2 | | | 8-17-62 | C | 2 | | C | 2 | | | 1-11-63 |
| | | | | 3 | 2a | | | | | | | 2a | | | |
| | | | | 17 | | | | | | | | 23 | | | |
| | | | | 18 | | | | | | | | 43 | | | |
| | | | | 33 | | | | | | | | 53 | | | |
| | | | | 42 | | | | | | | | 55 | | | |
| | | | | 45 | | | | | | | | 56 | | | |
| | | | | 48 | | | | | | | C | | | | 1-11-63 |
| | | | | 49 | | | | | | | C | 2 | | | 4-15-63 |
| | | | | 50 | | | | | | | | 2a | | | |
| | | | | 51 | | | | | | | | 23 | | | |
| | | | | 52 | | | | | | | | 43 | | | |
| | | | | 53 | | | | | | | C | 52 | | | 4-15-63 |
| | | | | 54 | | | | | | | | | | | |
| | | | C | 55 | | | 8-17-62 | | | | | | | | |
| | | | C | 2 | | | 9-14-62 | | | | | | | | |
| | | | | 2a | | | | | | | | | | | |
| | | | | 11 | | | | | | | | | | | |
| | | | | 23 | | | | | | | | | | | |
| | | | | 29 | | | | | | | | | | | |
| | | | | 33 | | | | | | | | | | | |
| | | | | 34 | | | | | | | | | | | |
| | | | | 37 | | | | | | | | | | | |
| | | | | 40 | | | | | | | | | | | |
| | | | | 44 | | | | | | | | | | | |
| | | | | 45 | | | | | | | | | | | |
| | | | C | 49 | | | 9-14-62 | | | | | | | | |
| | | | C | 2 | | | 10-22-62 | | | | | | | | |
| | | | | 2a | | | | | | | | | | | |
| | | | | 11 | | | | | | | | | | | |
| | | | | 31 | | | | | | | | | | | |
| | | | | 33 | | | | | | | | | | | |
| | | | | 35 | | | | | | | | | | | |
| | | | | 35a | | | | | | | | | | | |
| | | | | 45 | | | | | | | | | | | |
| | | | | 50 | | | | | | | | | | | |
| | | | | 52 | | | | | | | | | | | |
| | | | C | 53 | | | 10-22-62 | | | | | | | | |

▷ See revision description page, preceding Document Table of Contents

REVISED 4-15-63

BOEING | VOL. | NO D2-11162

U3 4300 1000 (WAS BAC 4131 C) | SEC. C | PAGE 2a

138

# TABLE OF CONTENTS

## SECTION "C"

## FACTORY SUPPORT EQUIPMENT AND ASSEMBLY AND CHECKOUT EQUIPMENT

## ASSEMBLY AND CHECKOUT

## A/F PLANT 77


| | Page |
|---|---|
| TITLE PAGE | 1 |
| REVISION PAGE | 2 |
| TABLE OF CONTENTS | 3 |
| SCOPE | 5 |
| GROUND RULES | 6 |
| EQUIPMENT LIST - CHECKOUT EQUIPMENT FOR AIRBORNE COMPONENTS | 8 |
| MASTER FLOW DIAGRAM | 13 |
| TECHNICAL FUNCTIONAL ANALYSIS | |
| 1.0 Assembly and Checkout of A/F Plant 77 for Operation | 14 |
| 2.0 Receiving and Inspection, FSE, MTE and ACO Equipment | 15 |
| 3.0 Transport, Handle and Store | 16 |
| 4.0 Assembly & Checkout of Certification/Calibration Laboratory | 17 |
| 5.0 Equipment Certification | 18 |
| 6.0 Assembly and Checkout Maintenance Support Shop | 19 |
| 7.0 Functionally Test Equipment | 23 |
| 8.0 Assembly and Checkout of CPA | 24 |
| 9.0 Assembly and Checkout of MAB | 36 |
| 10.0 Assembly and Checkout of Ordnance Processing Area | 43 |
| 11.0 Assembly and Checkout of Missile and Motors Storage Area | 44 |
| 12.0 Missile Handling Compatibility Test | 46 |

| | PAGE |
|---|---|
| Equipment List - Support or Maintenance Equipment For Airborne Checkout Equipment | 48 |
| Required Documents | 54 |
| Required Drawings | 56 |

## SECTION C

## FACTORY SUPPORT EQUIPMENT AND ASSEMBLY AND CHECKOUT EQUIPMENT ASSEMBLY AND CHECKOUT

SCOPE

This section is the technical portion of the complete plan for assembly and checkout of A/F Plant 77, given the completed facilities. The assembly and checkout will be accomplished in three basic phases following acceptance of the completed facility.

Phase I will consist of installing equipment in the Receiving and Inspection Area and the Vehicle Service Area; installing Calibration/Certification Laboratory Equipment which requires factory or OOAMA Calibration and Certification; and installing other equipment requiring only source factory testing.

Phase II will consist of Receiving and Inspection, Calibration/Certification or Calibration/Verification, Assembly and Functional Test of equipment for the Maintenance Support Area. (See D2-12075, Cal/Cert and Test Equipment Index) (See C1.0, C2.0, C3.0, C5.0 and C6.0). R

Phase III will consist of installing and testing equipment in the other areas. Portable equipment will be processed through the Calibration/Certification Laboratory or Maintenance Support Area for testing as required. Permanently installed equipment will normally be installed first, calibrated with Calibration/Certification equipment and then tested as installed (See C1.0 through C3.0, C5.0 and C8.0 and on). It should be noted that items of equipment used in C8.0 through C12.0 (not requiring functional test) and items that are tested in place, may be assembled concurrent with Phase I and Phase II.

SECTION C - (CONT)

The material in this section is organized as follows:

1. Tabulated list (C1) of Factory Support Equipment and Assembly and Checkout Equipment required to complete the basic facility.
2. Master Functional flow drawing.
3. Function Requirements Technical Analysis Sheets, in numberical order by function number.
4. Tabulated list (C2) of Factory Support Equipment and Assembly and Checkout Equipment used to install and checkout support equipment.
5. List of documents required to provide test procedures.

GROUND RULES

The General Ground Rules in Section A and the following specific ground rules apply to this section:

1. Factory Support Equipment and Assembly and Checkout Equipment items received will be thoroughly inspected for physical integrity and possible damage incurred in shipping and handling.
2. Some major items of permanently installed equipment will be installed first and calibrated and tested in position.
3. Maintenance equipment will be covered in Section D.
4. The assembly and checkout operations at A/F Plant 77 and their acceptance by Quality Control will be accomplished by use of the integrated record system (M&IR). Accordingly, a specific function or reference will not be called out in describing the requirements for each functional test.

SECTION C - (CONT)

5. Common hand tools will be required to support the equipment installation and checkout functions. It is assumed that they will normally be provisioned to support the skill levels involved; and, therefore, are not listed as a specific requirement in this document.

6. All test equipment used to assemble and checkout the Air Force Plant 77 Equipment requiring callout shall be certified by the Certification/ Calibration Laboratory.

# PLANT 77 ASSEMBLY CHECKOUT EQUIPMENT LIST

| IDENT. NO. | NOMENCLATURE | CLASS | LOCATION & FUNCTION | | | | | |
|---|---|---|---|---|---|---|---|---|
| | | | CPA | MAB | Missile & Engine Storage | Maint. Support Area | Missile Transfer Area | MISC |
| 13 | Test Set-Ordnance, Electrical, 70143 | FSE | | | | | | C10.1 |
| 507 | Leakage Tester [illegible] | FSE | [illegible] | | | C7.1 | | |
| 614 | NCU (H2) Trailer, Stage I | FSE | C8.1 | | | | | |
| 615 | NCU (H8) Trailer, Stage II | FSE | C8.1 | | | | | |
| 620 | NCU (H13) Trailer, Stage III | FSE | C8.1 | | | | | |
| 7619 | Fixture, Support-Umbilical Cabling, MAB | FSE | | C9.1 | | | | |
| 7628 | Rails, Missile Joining | FSE | | C9.1 | | | | |
| 7629 | Rails-Storage, Missile and Engine | FSE | | | C11.1 | | | |
| 7630 | Scaffolding-Missile Access | FSE | | C9.1 | | | | |
| 7678 | Fixture, Test-Ordnance Device | FSE | | | | | | C10.1 |
| 7679 | Test Assembly, Ordnance Circuit | FSE | C8.1 | C9.1,C9.3 | | C7.1 | | |
| 7683 | Distribution Box, NCU Test, CPA | FSE | C8.1,C8.2 | | [illegible] | | | |
| 7685 | Rails-Storage, Missile-GTM 77 | FSE | | | C11.1,C12.3 | | | |
| 7715 | Adapter Cables, Test Set, Raceway Cables | FSE | C8.1,C8.2 | | | | | |
| 7717 | Power Supply Group, MAB | FSE | | C9.1, C9.2 | | | | |

# PLANT 77 ASSEMBLY - CHECKOUT EQUIPMENT LIST

| IDENT. NO. | NOMENCLATURE | CLASS | LOCATION & FUNCTION | | | | | |
|---|---|---|---|---|---|---|---|---|
| | | | CPA | MAB | Missile & Engine Storage | Maint. Support Area | Missile Transfer Area | MISC |
| 7718 | Cable Assembly, Interconnecting, MAB | FSE | | C9.1,C9.2 | | | | |
| 7719 | Cable Assembly, NCU Test, MAB | FSE | | C9.1, C9.2 | | | | |
| 7720 | Cable Assembly, Umbilical, MAB | FSE | | C9.1, C9.2 | | | | |
| 7721 | Junction Box, Test, MAB | FSE | | C9.1, C9.2 | | | | |
| 7722 | Dummy Load, Re-Entry Vehicle | FSE | | | | C7.1 | | |
| 7723 | Console, Missile Checkout | FSE | | C9.1, C9.2 | | | | |
| 7724 | Test Set, NCU Zero Alignment | FSE | C8.1, C8.2 | C9.1,C9.2 | | C7.1 | | |
| 7726 | Cable Assembly, Interconnecting G&C Test Position | FSE | C8.1, C8.2 | | | | | |
| 7727 | Cable Assembly, Interconnecting, NCU Test Position | FSE | C8.1, C8.2 | | | | | |
| 7728 | Power Supply Group, G&C Test, CPA | FSE | C8.1, C8.2 | | | | | |
| 7729 | Power Supply Group, NCU Test, CPA | FSE | C8.1, C8.2 | | | | | |
| 7739 | Junction Box, Auxiliary, MAB | FSE | | C9.1,C9.2 | | | | |
| 7740 | Box, Test, Ordnance Cable | FSE | | C9.1 | | C7.1 | | |
| 7741 | Hose Assembly, Cooling, G&C Section | FSE | C8.1 | | | | | |
| 7742 | Cable Assemblies, Interconnecting, NCU Linkage Adjustment,CPA | FSE | C8.1, C8.2 | | | | | |
| 7743 | Distribution Box, NCU Linkage Adjustment, CPA | FSE | C8.1, C8.2 | | | | | |

C1 - CHECKOUT EQUIPMENT FOR B COMPONENTS

# PLANT 77 ASSEMBLY & CHECKOUT EQUIPMENT LIST

| IDENT. NO. | NOMENCLATURE | CLASS | LOCATION & FUNCTION | | | | | |
|---|---|---|---|---|---|---|---|---|
| | | | CPA | MAB | Missile & Engine Storage | Maint. Support Area | Missile Transfer Area | MISC |
| 7744 | Power Supply Group, NCU Linkage Adjustment, CPA | FSE | C8.1,C8.2 | | | | | |
| 7[illegible] | Rail [illegible], [illegible]-Engine Transfer | [illegible] | | | | [illegible] | | |

C1 - CHECKOUT EQUIPMENT FOR A/B COMPONENTS

# PLANT 77 ASSEMBLY - CHECKOUT EQUIPMENT LIST

| IDENT. NO. | NOMENCLATURE | CLASS | LOCATION & FUNCTION | | | | | |
|---|---|---|---|---|---|---|---|---|
| | | | CPA | MAB | Missile & Engine Storage | Maint. Support Area | Missile Transfer Area | MISC |
| ACO 466 | Purging & Drying Kit - G&C Section | ACO | C8.1 | C9.1 | | | | |
| ACO 0565 | Facility Test Fixture | ACO | C8.1 | | | | | |
| ACO 0622 | Test Group, G&C, C-89 | ACO | C8.1,C8.2 | | | | | |
| ACO 0624 | Test Set, Programming, C-91 | ACO | C8.1, C8.2 | | | | | |
| ACO 0667 | Power Supply, D. C. Portable, C-95 | ACO | C8.1,C8.2 | C9.1,C9.2 | | | | |
| ACO 9278 | Liquid Cooling Equipment, Ground Guidance and Control | ACO | C8.1,C8.2 | C9.1,C9.2 | | | | |
| [illegible] | [illegible] | [illegible] | [illegible] | | | | | |
| [illegible] | [illegible] | [illegible] | [illegible] | [illegible] | | | | |
| [illegible] | [illegible] | [illegible] | [illegible] | [illegible] | | | | |
| [illegible] | [illegible] | [illegible] | [illegible] | [illegible] | | | | |
| [illegible] | [illegible] | [illegible] | [illegible] | [illegible] | | | | |

R R R R R R

# PLANT 77 ASSEMBLY & CHECKOUT EQUIPMENT LIST

| IDENT. NO. | NOMENCLATURE | CLASS | LOCATION & FUNCTION | | | | | | |
|---|---|---|---|---|---|---|---|---|---|
| | | | CPA | MAB | Missile & Engine Storage | Maint. Support Area | Missile Transfer Area | MISC | |
| ACO 456 | Table, Work-Electronic Test | SFC/OH | C8.1 | | | | | | |
| ACO 350 | T. V. Monitor, Closed Circuit | SFC/OH | | C9.1 | | | | | |
| ACO 4425 | Lamp, Incandescent-Portable Flood | SFC/OH | | | C11.1 | | | | |
| - | Recorder, Temperature | Facility | | | C11.1 | | | | |
| - | Recorder, Humidity | Facility | | | C11.1 | | | | |
| - | Alarm System | Facility | | | C11.1 | | | | |
| ACO 402 | Cable Tester | SFC/OH | C8.1,C8.2 | | | | | | |
| Part of ACO 0622 | Junction, Box, NCU Test, CPA | ACO | C8.1,C8.2 | C9.1 | | | | | R |
| Part of ACO 0622 | Junction Box, G&C Test, CPA | ACO | C8.1, C8.2 | | | | | | R |
| ACO 449 | Cable Assembly, Power Electrical, Portable Flood Lamps | SFC/OH | | | C11.1 | | | | R |

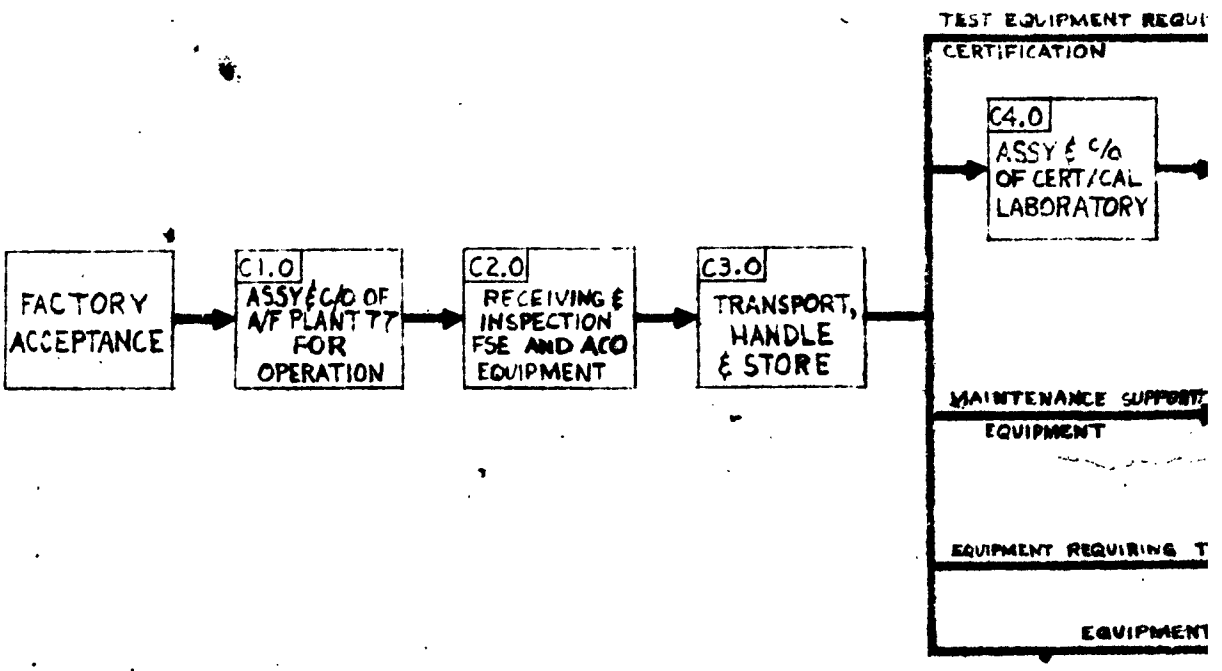
TEST EQUIPMENT REQUI
CERTIFICATION
C4.0
ASSY & C/O OF CERT/CAL LABORATORY
FACTORY ACCEPTANCE
C1.0
ASSY & C/O OF A/F PLANT T7 FOR OPERATION
C2.0
RECEIVING & INSPECTION FSE AND ACO EQUIPMENT
C3.0
TRANSPORT, HANDLE & STORE
MAINTENANCE SUPPORT
EQUIPMENT
EQUIPMENT REQUIRING T
EQUIPMENT

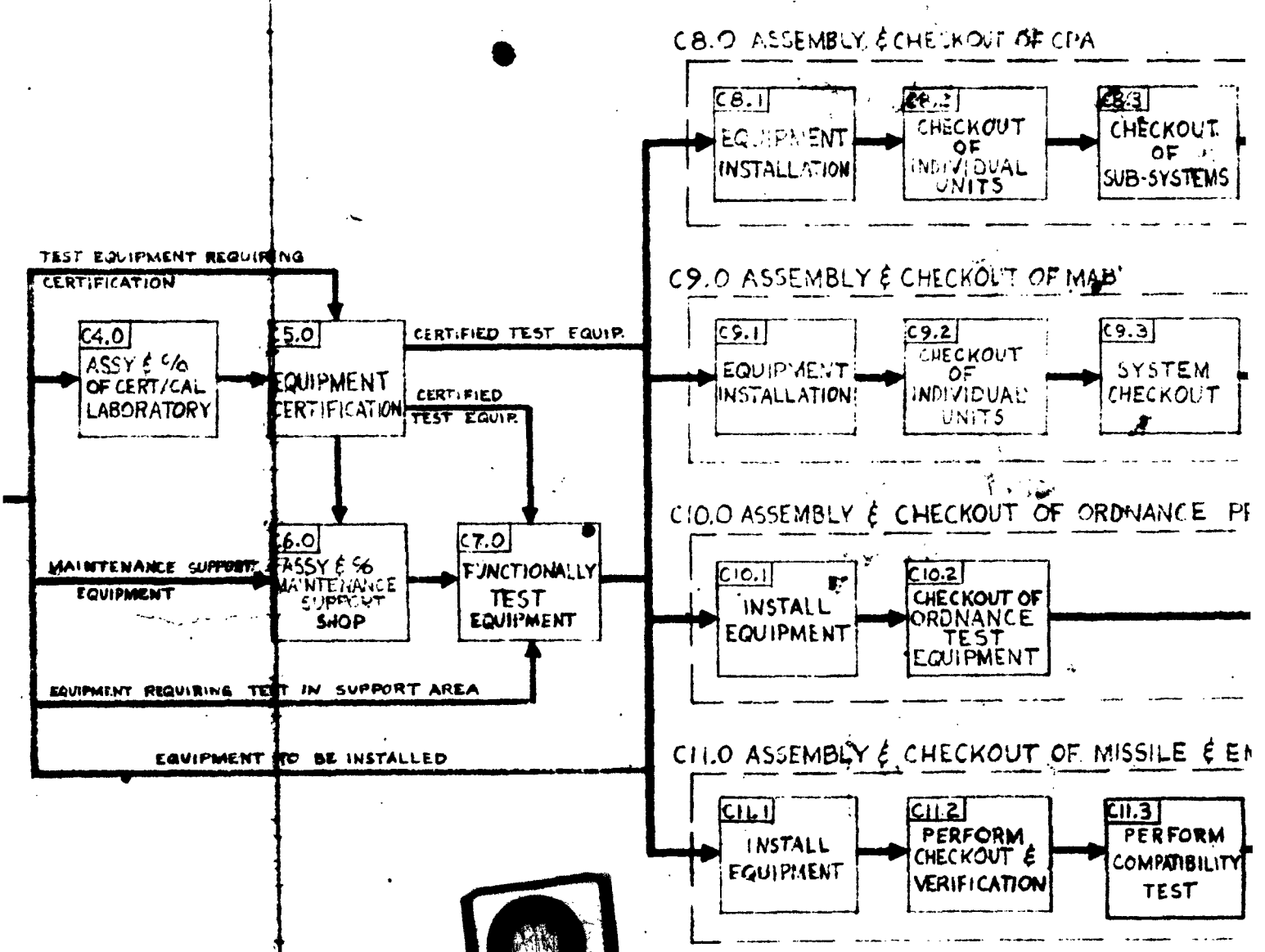
C8.0 ASSEMBLY & CHECKOUT OF CPA
C8.1
EQUIPMENT INSTALLATION
C8.2
CHECKOUT OF INDIVIDUAL UNITS
C8.3
CHECKOUT OF SUB-SYSTEMS
C9.0 ASSEMBLY & CHECKOUT OF MAB
C9.1
EQUIPMENT INSTALLATION
C9.2
CHECKOUT OF INDIVIDUAL UNITS
C9.3
SYSTEM CHECKOUT
C10.0 ASSEMBLY & CHECKOUT OF ORDNANCE
C10.1
INSTALL EQUIPMENT
C10.2
CHECKOUT OF ORDNANCE TEST EQUIPMENT
C11.0 ASSEMBLY & CHECKOUT OF MISSILE &
C11.1
INSTALL EQUIPMENT
C11.2
PERFORM CHECKOUT & VERIFICATION
C11.3
PERFORM COMPATIBILITY TEST
TEST EQUIPMENT REQUIRING CERTIFICATION
C4.0
ASSY & C/O OF CERT/CAL LABORATORY
C5.0
EQUIPMENT CERTIFICATION
CERTIFIED TEST EQUIP.
CERTIFIED TEST EQUIP.
MAINTENANCE SUPPORT EQUIPMENT
C6.0
ASSY & C/O MAINTENANCE SUPPORT SHOP
C7.0
FUNCTIONALLY TEST EQUIPMENT
EQUIPMENT REQUIRING TEST IN SUPPORT AREA
EQUIPMENT TO BE INSTALLED

LEGEND

C/O = CHECKOUT

FSE = FACTORY SUPPORT EQUI

MGE = MAINTENANCE GROUND

ACO = ASSEMBLY AND CHEC

MAB = MISSILE ASSEMBLY B

RFI = RADIO FREQUENCY INT

OF CPA

T

L

C8.3 CHECKOUT OF SUB-SYSTEMS

C8.4 SYSTEM CHECKOUT

C8.5 R.F.I. TESTS

OF MAB

C9.3 SYSTEM CHECKOUT

C9.4 MAB COMPATIBILITY & R.F.I. TESTS

OF ORDNANCE PROCESSING AREA

OF

E

T

OF MISSILE & ENGINE STORAGE AREA

&

ON

C11.3 PERFORM COMPATIBILITY TEST

C12.0 MISSILE HANDLING COMPATIBILITY TEST

PLANT 77 OPERATION

MISSILE ASSEMBL & CHECKO SEE SEC.

PLANT 7 FSE & MG MAINTENAN SEE SEC.

MISSILE REPAIR & REWORK SEE SEC.

3

1-12-62
11-15-61
REV. 8-31-61
MAY 15 1961

MASTER FLOW (SECT.

PLANT 77
ASSEMBLY & CHECKOUT

BOEING AIRPLANE COMPANY

LEGEND

C/O = CHECKOUT
FSE = FACTORY SUPPORT EQUIPMENT
MGE = MAINTENANCE GROUND EQUIP
ACO = ASSEMBLY AND CHECKOUT
MAB = MISSILE ASSEMBLY BUILDING
RFI = RADIO FREQUENCY INTERFERENCE

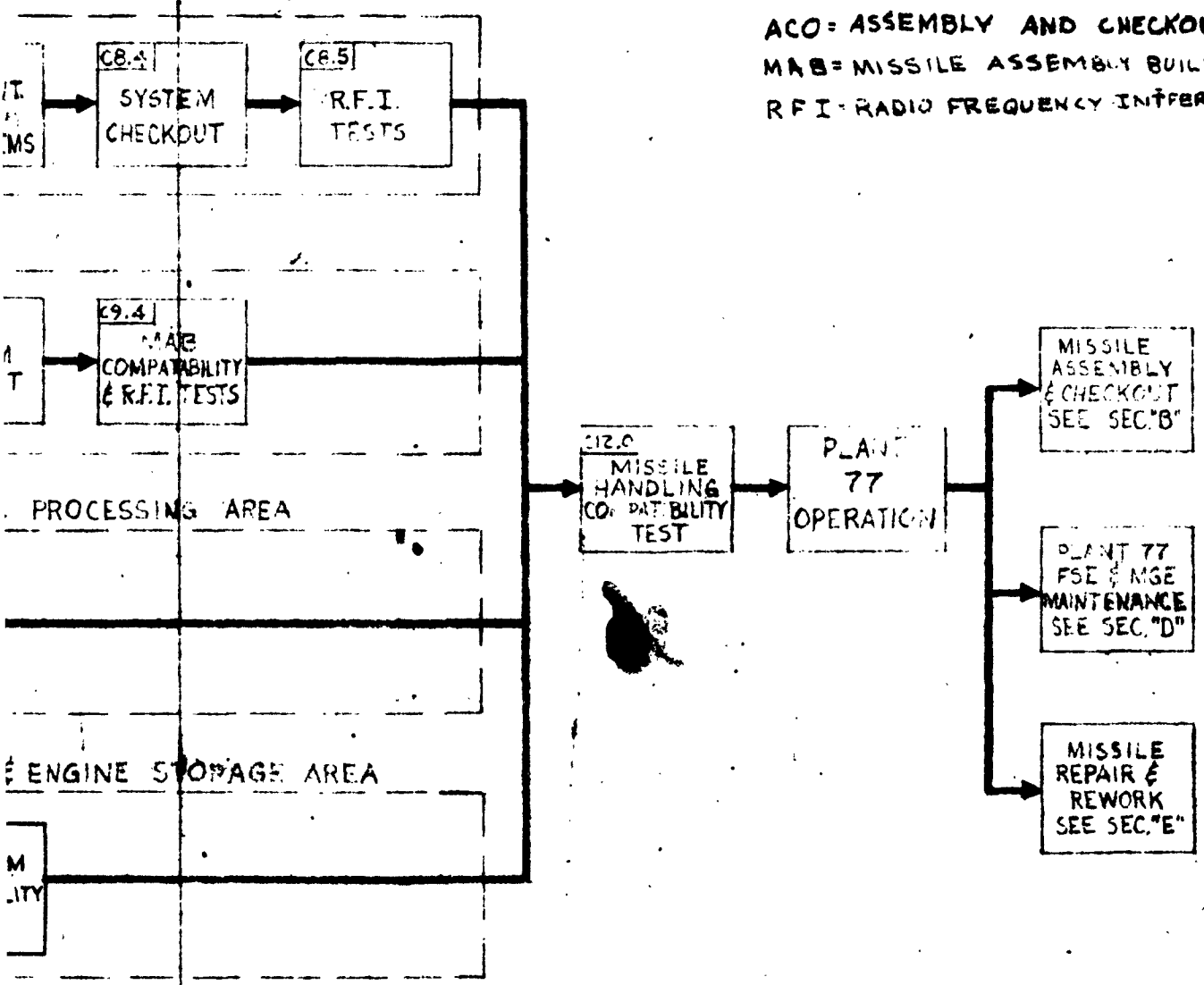


4

MASTER FLOW (SECT. C)

PLANT 77 ASSEMBLY & CHECKOUT

BOEING AIRPLANE COMPANY

1-12-62
11-15-61
REV. 8-31-61
MAY 15 1961

| ASSEMBLY OR CHECKOUT FUNCTION AND TECHNICAL REQUIREMENTS | RECOMMENDED EQUIPMENT OR DOCUMENT |
|---|---|
| 1.0 ASSEMBLY AND CHECKOUT OF A/F PLANT 77 FOR OPERATION<br>The Minuteman Base Installation Department will receive the facility at Hill Air Force Base designated as Air Force Plant 77 upon USAF approval of the grounds, buildings, and equipment to the design specifications which govern the A & E contractors. | |
| 1.1 Facilities Equipment Acceptance<br>Boeing Quality Control shall perform the receiving inspection of the Special Facilities Contract Equipment per Document D1979, Quality Control Operating Procedures, and appropriate Manufacturing Manuals. | |
| 1.2 Facilities Equipment Installation<br>The Special Facilities Contract Equipment and Facilities Support Equipment shall be installed in appropriate locations per appropriate Facilities Installation Drawings. | Installation Drawings<br>177-00-112<br>177-00-108 |
| 1.3 Activation<br>The necessary equipment required to initiate the operation of A/F Plant 77 shall be moved into the receiving and inspection areas. See Function C2.0. | 1. Truck, Lift-Fork (ACO 453) R<br>2. Truck, Motor-Misc. Delivery (ACO 452) R |

| ASSEMBLY OR CHECKOUT FUNCTION AND TECHNICAL REQUIREMENTS | RECOMMENDED EQUIPMENT OR DOCUMENT |
|---|---|
| 2.0 RECEIVING AND INSPECTION, FSE, AND ACO EQUIPMENT<br>Receiving and inspection of support and checkout equipment is required to activate A/F Plant 77. See equipment list C1 and C2. Procedures are required to receive and inspect the Factory Support Equipment. ACO equipment is received and inspected per manufacturers manuals. | |
| 2.1 RECEIVE EQUIPMENT AND PROCESS SHIPPING PAPER<br>Equipment shall be received at the loading dock of Bldg. 1266. Delivery shall be made to this area by commercial rail or motor freight under government bill of lading. Photographs of damaged containers shall be taken as necessary to provide proof of damage. | 1. Camera and Tripod, Still Picture (ACO 448) R |
| 2.2 MOVE TO INSPECTION AREA<br>Equipment shall be transported from the unloading dock to the R & I area in Bldg. 1266. | 1. Truck, Lift-Fork (ACO 453) R<br>2. Truck, Lift-Jack (ACO 461) R |
| 2.3 UNCRATE<br>Equipment shall be uncrated as required to provide accessibility for inspection. | |
| 2.4 PERFORM INSPECTION<br>All items shall be inspected for identification, overages, shortages and damage by use of appropriate inspection procedures. | 1. D1979 Inspection Procedures |
| 2.5 RECRATE AS REQUIRED. | |

FUNCTION 2.0

| ASSEMBLY OR CHECKOUT FUNCTION AND TECHNICAL REQUIREMENTS | RECOMMENDED EQUIPMENT OR DOCUMENT |
|---|---|
| 3.0 TRANSPORT, HANDLE AND STORE<br>The transporting, handling and storing of FSE and ACO equipment are required during the initial activation of Plant 77 and for spare equipment during operation of the plant. | 1. Truck, Lift-Fork (ACO)453)<br>2. Truck, Motor-Misc. Delivery (ACO)452) |
| 3.1 TRANSPORT TO CALIBRATION<br>Equipment requiring certification and calibration shall be routed direct from the R&I to the Certification/Calibration Laboratory, see C5.0. | |
| 3.2 TRANSPORT TO AREA OF INSTALLATION<br>Equipment initially requiring functional test after installation shall be transported to the area of installation, installed, then tested. | |
| 3.3 TRANSPORT TO STORES<br>That equipment not requiring installation or specifically provided as spares shall be transported to stores and retained until required. | |

| ASSEMBLY OR CHECKOUT FUNCTION AND TECHNICAL REQUIREMENTS | RECOMMENDED EQUIPMENT OR DOCUMENT |
|---|---|
| 4.0 ASSEMBLY AND C/O OF CERTIFICATION/CALIBRATION LABORATORY<br>The certification/calibration laboratory shall be capable of certifying all FSE and ACO equipment requiring certification/calibration at A/F Plant 77. The cert/cal transfer standards shall be transported to Bldg 1255 for installation. The standards will be certified by the OOAMA Standards Laboratory at Hill AFB. | |
| 4.1 Cal/Cert standards shall be installed at Air Force Plant 77.<br>The following types of cert/cal standards shall be included:<br>a. DC Transfer Standards<br>b. Temperature Standard<br>c. Optical Cal/Cert Standards<br>d. Frequency & Time Standards<br>e. Meter Calibration Standards<br>f. Torque Standards<br>g. Oscilloscope Calibration Equipment<br>h. Power Supply Calibration Equipment<br>i. Resistance Standards<br>j. Pressure Certification Standards<br>k. AC Transfer Standards<br>l. Capacitance and Inductance Standards | |
| | FUNCTION C4.0 |

| ASSEMBLY OR CHECKOUT FUNCTION AND TECHNICAL REQUIREMENTS | RECOMMENDED EQUIPMENT OR DOCUMENT |
|---|---|
| 5.0 EQUIPMENT CERTIFICATION<br><br>FSE and ACO equipment which requires certification shall be calibrated per Document D2-9918 Portable equipment (electrical, electronic or mechanical) requiring certification and calibration shall be routed through Cert/Cal Laboratory. Sub-components of installed equipment requiring calibration may be calibrated at its permanent location or in the Cert/Cal Laboratory. Periodic recertification will be required as specified in D2-12075. | 1. D2-5373 Aerospace Division Measurements and Test Equipment Certification Control.<br>1. Cert/Cal equipment as defined in D2-9918, Cal. Requirements Summary A/F Plant 77<br>2. D2-12075 Cal/Cert and Test Equipment Index. |

| ASSEMBLY OR CHECKOUT FUNCTION AND TECHNICAL REQUIREMENTS | RECOMMENDED EQUIPMENT OR DOCUMENT |
|---|---|
| 6.0 ASSEMBLY AND CHECKOUT MAINTENANCE SUPPORT SHOP<br>The Maintenance Support Shop shall be dapable of performing modification, maintenance and functional testing of mechanical, electronic and electrical FSE and ACO to a component or card level. Installation drawings and procedures are required. | |
| 6.1 INSTALL FSE AND ACO CHECKOUT EQUIPMENT<br>The equipment listed below shall be installed per installation drawings.<br>The equipment bonds and grounds shall be verified.<br>a. Test Set, Cooler, Liquid, Guidance Section (ACO 3035)<br>b. Tape Perforator and Verifier (ACO 268) | 1. Installation Drawings 177-00-109 & 177-00-112<br>2. Truck, Lift-Fork (ACO 453)<br>3. Megger, Ground (ACO 365)<br>4. Ohmmeter, (ACO 4381)<br>5. Megohmmeter (ACO 362) |

| ASSEMBLY OR CHECKOUT FUNCTION AND TECHNICAL REQUIREMENTS | RECOMMENDED EQUIPMENT OR DOCUMENT |
|---|---|
| 6.1.1 EMPLACE CHECKOUT AND MAINTENANCE EQUIPMENT FOR THE TV MONITOR SYSTEM | |
| The following portable equipment will be emplaced in the maintenance support building: | |
| a. Oscilloscope (ACO 4004) | |
| b. Plug-In-Unit, Oscilloscope (ACO 4172) | |
| c. Power Supply, (ACO 345) [illegible] (ACO 345) | |
| d. Probe, Detector Attenuator (ACO 335) | |
| e. Tester, Transistor (ACO 323) | |
| f. Vendor Documents, Operation and Maintenance | |
| g. Tester, Vacuum Tube, Mutual Conductance Type (ACO 327) | |
| h. Generator, Video Sweep to 20 Megacycles (ACO 326) | |
| i. Voltmeter, Vacuum Tube (ACO 337) | |
| j. Multimeter (ACO 4001) | |
| k. High Voltage D. C. Probe (ACO 336) | |
| l. EIA Resolution Chart (ACO 330) | |
| 6.1.2 EMPLACE CHECKOUT AND MAINTENANCE EQUIPMENT FOR THE MOBILE RADIO-TRANSMITTER | |
| The following portable equipment will be emplaced in the maintenance support building: | |
| a. Tester, Transistor (ACO 323) | |
| b. Monitor, Radio Station, F-M (ACO 332) | |
| c. Test Set, Multipurpose, Portable Radio (ACO 324) | |
| d. Power Supply (ACO 376) | |
| e. Wattmeter, Radio Frequency (ACO 331) | |
| f. Generator, Signal, F-M (ACO 325) | FUNCTION C6.1.2 |

| ASSEMBLY OR CHECKOUT FUNCTION AND TECHNICAL REQUIREMENTS | RECOMMENDED EQUIPMENT OR DOCUMENT |
|---|---|
| 6.1.2 (CONT) | |
| g. Load, Dummy (ACO 334) | |
| h. Microphone (ACO 328) | |
| i. Tester, Vacuum Tube, Mutual Conductance Type (ACO 327) | |
| j. Multimeter (ACO 4001) | |
| 6.2 POST ASSEMBLY TEST OF INDIVIDUAL UNITS | |
| Individual units that can be operated alone shall be tested as units. Thoseunits that must be operated with other equipment shall be tested as a system in C6.3. Detail test procedures are required. | |
| 6.2.1 TAPE PERFORATOR AND VERIFIER (ACO 268) | |
| Testing shall include: | 1. Tape, Aluminum, Mylar (Treasury Stores) |
| a. The manual make up of new tapes | 2. Manufacturer's Manual |
| b. Automatic make up of new tapes | |
| c. Verification of tapes (both those punched and a tape that has been punched and verified on another verifier). | |

| ASSEMBLY OR CHECKOUT FUNCTION AND TECHNICAL REQUIREMENTS | RECOMMENDED EQUIPMENT OR DOCUMENT |
|---|---|
| 6.2.2 TEST SET, COOLER, LIQUID, GUIDANCE SECTION (ACO 3035)<br>No functional testing required. (Calibration/Certification of components only)1 | |
| 6.3 RADIO FREQUENCY TEST<br>The requirement exists to establish that the support shop test areas will meet radio frequency interference requirements. Detail test procedures are required. | |
| 6.3.1 PERFORM RFI TEST | 1. D2-10025 Electro-Interference Test Plan for WS-133A Systems, Plant 77<br>2. The equipment required to conduct the Radio Frequency Test will be listed in RFI Test Procedures Document |

FUNCTION C6.2.3

| ASSEMBLY OR CHECKOUT FUNCTION AND TECHNICAL REQUIREMENTS | RECOMMENDED EQUIPMENT OR DOCUMENT |
|---|---|
| 7.0 FUNCTIONALLY TEST EQUIPMENT | |
| The portable equipment - electrical, electronic or mechanical - requiring an operating test, shall be routed through the Maintenance Support Shop. Detailed test procedures are required. | |
| 7.1 PERFORM TEST | |
| The following FSE, which requires test, shall be tested in the support shop. | |
| a. Dummy Load, Re-Entry Vehicle, (FSE 7722) * | D2-10122 Functional Test Dummy Load, Re-Entry Vehicle |
| b. Test Set, NCU Zero Alignment (FSE 7724) | D2-10096 FTP Test Set NCU Alignment |
| c. Test Set Assembly, Ordnance Circuit (FSE 7679) | D2-12054 FTP, Test Set FTP Ordnance Circuit (ACO 929) Test Set, Power Supply Test Tool - Test Set Explosive Circuitry (ACO 935) |
| d. Box Test Ordnance Cable (FSE 7740) | FTP Dwg. 29-21442 |
| e. Test Set - Console, Missile Checkout (FSE 7675) | D2-12606 FTP Missile Checkout Console Test Set Multimeter (ACO 4001) Oscilliscope (ACO 4004) Diff. Voltmeter AC-DC (ACO 422) Voltbox, AC Power Supply (ACO 391) DC Power Supply (ACO 463) |
| f. Tester, Leakage (FSE 7) | D2-12196 Preassembly Test Procedure for Leakage Tester |
| g. Test Set and Adapter Cables - Raceway Cables (FSE 7696) | D2-14115, Vol V, F/T Procedures. Test Set & Adapter Cables - Raceway Cables Voltmeter (ACO 422) Decade Box (ACO 4368) |
| * For functional test of this item, use applicable calibration/certification equipment. | FUNCTION C7.0 |

| ASSEMBLY OR CHECKOUT FUNCTION AND TECHNICAL REQUIREMENTS | RECOMMENDED EQUIPMENT OR DOCUMENT |
|---|---|
| 8.0 ASSEMBLY AND CHECKOUT OF CPA<br>The assembly and checkout of the Component Processing Area shall consist of installation and test of all FSE and ACO equipment required to test airborne components. There are four (4) test areas in Bldg. 1265 to be checked out:<br>1. One (1) Composite Test Area, (Guidance and Control, NCU, Angular Accelerometer and Drawer Maintenance Test Positions).<br>2. One (1) Nozzle Control Unit Linkage Adjustment Test Area.<br>3. One (1) Cable Test Area<br>4. One (1) Battery Test Area<br>Individual test functions accomplished in the composite test area (item 1 above) can be performed independently from each other. | |
| 8.1 EQUIPMENT INSTALLATION<br>The following equipment shall be required in the Component Processing Area Building to test the airborne components listed in B3.1. Install the equipment by uncrating and positioning.<br>A. Composite Test Area, CPA<br>This area consists of the Guidance and Control, NCU, Angular Accelerometer, and Drawer Maintenance Test Positions. (See Function E1.3.1.1) | 1. Installation Drawings 177-00-109 (Facilities Dwgs)<br>2. Megger, Ground (ACO 0365)<br>3. Ohmeter, (ACO 4381) |
| | FUNCTION C8.1 |

| ASSEMBLY OR CHECKOUT FUNCTION AND TECHNICAL REQUIREMENTS | RECOMMENDED EQUIPMENT OR DOCUMENT |
|---|---|
| 8.1 EQUIPMENT INSTALLATION (CONT) | |
| The following equipment shall be installed: | |
| 1. Test Set, Programming, C91 (ACO 0624) | |
| 2. Test Group, Guidance and Control, C89 (ACO 0622) | |
| 3. Test Group, Ground Electronic System C90 (ACO 0623) | |
| 4. Power Supply Group, G&C Test, CPA (FSE 7728) | |
| 5. Power Supply Group, NCU Test, CPA (FSE 7729) | |
| 6. Power Supply, DC Portable, C95 (ACO 0667) | |
| 7. Cable Assy, Interconnecting, G&C Test Position (FSE 7726) | |
| 8. Cable Assy, Interconnecting, NCU Test Position (FSE 7727) | |
| 9. Distribution Box, NCU Test, CPA (FSE 7683) | |
| 10. Liquid Cooling, Equipment, Ground Guidance and Control (ACO 9278) | |
| 11. Hose Assembly, Cooling, G&C Section (FSE 7741) | |
| 12. Purging and Drying Kit, G&C Section (ACO 466) | |
| 13. Cable Assembly, Power, C90-C91 (FSE 7736) | |
| 14. Table, Work, Electronic Test (ACO 456) | |
| 15. Truck, Hand, Autonavigator (ACO 0565) | |
| 16. Junction Box, G&C Test (Part of ACO 0622) | |
| 17. Junction Box, NCU Test (Part of ACO 0622) | |
| | FUNCTION C8.1 |

| ASSEMBLY OR CHECKOUT FUNCTION AND TECHNICAL REQUIREMENTS | RECOMMENDED EQUIPMENT OR DOCUMENT |
|---|---|
| C8.1 B. Nozzle Control Unit Linkage Adjustment Test Area, CPA<br><br>The test area consists of the following equipment:<br><br>1. Power Supply Group, NCU Linkage Adjustment, CPA (FSE 7744)<br><br>2. Distribution Box, NCU Linkage Adjustment, CPA (FSE 7743)<br><br>3. Cable Assemblies, NCU Linkage Adjustment, CPA (FSE 7742)<br><br>4. Test Set, NCU Zero Alignment (FSE 7724)<br><br>5. Table, Work, Electronic Test (ACO 456)<br><br>[illegible] Linkage Adjustment [illegible] )<br><br>C. Raceway Cable Test Area<br><br>1. Cable Tester (ACO 402)<br><br>2. Adapter Cables, Test Set, Raceway Cables (FSE 7715)<br><br>D. Battery Test Area<br><br>1. Test Set Assembly, Ordnance Circuit (FSE 7679) | |
| 8.1.1 The requirement exists to perform static pressure tests of the inlet coolant air to the C89 Test Group - C91 Test Set - C90 Test Group in the composite test position. The static pressure of the inlet air shall be adjusted by regulating the air inlet flow rate. Detail test procedures are required. | 1. Inclined Manometer (ACO 308)<br><br>2. D2-9262 Vol. 9 Site Acceptance Test Procedures-Plant 27 |

FUNCTION C8.1

| ASSEMBLY OR CHECKOUT FUNCTION AND TECHNICAL REQUIREMENTS | RECOMMENDED EQUIPMENT OR DOCUMENT |
|---|---|
| 8.2 CHECKOUT OF INDIVIDUAL UNITS<br>The requirement exists to functional test each individual unit installed. Individual units that can be operated alone shall be checked out as units. Those that must be operated with other equipment shall be checked out as a part of a sub-system, see C8.3. When all units and subsystems are checked out they shall be interconnected and checked out as a system, see C8.4. | |
| A. Test Set, Programming C91 (ACO 0624)<br>The C91 Programming Test Set shall be tested by exercising the tape controlled self test program in conjunction with the required test equipment. | 1. C91P Fault Isolation Tape P/N PT-D0109-0002-01-03 (Part of 0622)<br>2. D2-11294 Functional Test Procedures-Programming Test Group C91 |
| B. Test Group, Guidance and Control C89 (ACO 0622)<br>The C-89 requires C91 for programming and shall be tested in C8.3. | 3. Self Test Unit (C91) A/N Part 64980-305 |
| C. Test Group, Guidance and Control C90 (ACO 0623)<br>The C90 requires C91 for programming and shall be tested in C8.4.3. | |

FUNCTION C8.2

| ASSEMBLY OR CHECKOUT FUNCTION AND TECHNICAL REQUIREMENTS | RECOMMENDED EQUIPMENT OR DOCUMENT |
|---|---|
| 8.2 CHECKOUT OF INDIVIDUAL UNITS (CONT) | |
| D. Power Supply Group, G&C Test (FSE 7728)<br>The power supply group contains the N-10 and switching power supplies and the switching relays. The testing shall include:<br>1. No-load voltage regulation;<br>2. Full load voltage regulation;<br>3. Relay switching;<br>4. Ripple. | 1. D2-7828 Functional Test Procedures Power Supply Groups<br>2. See Equipment List at Left. |
| Multimeter, (ACO 4001)<br>Test Fixture, Power Supply MAB & CPA (FSE 7780)<br>Volt meter, Differential AC-DC (ACO 422)<br>Oscilloscope (ACO 4004)<br>Ammeter 0-500 amps & Shunts (ACO 347)<br>Load Banks 0-350 amps (ACO 388)<br>Power Supply (ACO 4127)<br>Plug-In-Unit, Oscilloscope (ACO 4172) | |
| E. Power Supply, DC Portable C-95 (ACO 0667)<br>The C-95 power supply contains a battery and charger. Testing shall include:<br>1. Voltage output measurement;<br>2. Battery charging. | 1. D2-11299 Functional Test Procedure-C95<br>2. Voltmeter-Diff. AC-DC (ACO 422)<br>3. Load Simulator (ACO 0599)<br>3. Power Supply (ACO 4127)<br>4. Recorder, Voltage (ACO 10701) |

| ASSEMBLY OR CHECKOUT FUNCTION AND TECHNICAL REQUIREMENTS | RECOMMENDED EQUIPMENT OR DOCUMENT |
|---|---|
| 8.2 (Continued)<br>F. Liquid Cooling Equipment, Ground Guidance and Control (ACO 9278)<br><br>The Cooling Unit Coolant Tanks will be filled with distilled or deionized water containing sodium chromate inhibitor.<br><br>The testing shall include:<br><br>1. Check temperature control unit;<br>2. Check coolant flow rate;<br>3. Check coolant temperature;<br>4. Alarm and NO-GO circuits. | 1. D2-10752 Functional Test Procedures -G&C Cooling Unit<br>2. D2-13915 Def. & Associated Req'ts, G&C Cooling |
| Thermometer (ACO 3076)<br>Valve (ACO 719)<br>Cable Adapter, Error Indication Test (ACO 731)<br>Cable Adapter, NO-GO and Gross Temp. Test, G&C Ground Cooling Equipment (ACO 732)<br>Bimetal Thermometer (ACO 749)<br>Flowmeter (ACO 752)<br>Pressure Sensor (ACO 753)<br>Flowmeter (ACO 754)<br>Reservoir (ACO 769)<br>Resistance Box, Decade (ACO 0593)<br>Ammeter, AC/DC (ACO 4461)<br>Conductivity Cell (ACO 674)<br>Microscope (ACO 315)<br>Adapter, Flow (G&C) Umbilical (ACO 200)<br>Test Kit Chromate (ACO 4623)<br>Sampling Bomb (ACO 313) | 3. See equipment list at left |
| G. Junction Box, G&C Test (Part of ACO 0622)<br><br>No test required.<br><br>H. Cable Assembly, Interconnecting, G&C Test Position (FSE 7726)<br><br>No test required. | |

FUNCTION C8.2

| ASSEMBLY OR CHECKOUT FUNCTION AND TECHNICAL REQUIREMENTS | RECOMMENDED EQUIPMENT OR DOCUMENT |
|---|---|
| 8.2 CHECKOUT OF INDIVIDUAL UNITS (CONT) | |
| I. Junction Box, NCU Test, CPA (Part of ACO 0622) | |
| No test required. | |
| J. Cable Assembly, Interconnecting, NCU Test Position (FSE 7727) | |
| No test required. | |
| K. Power Supply Group, NCU Test (FSE 7729) | |
| The power and switch rack contains the 1st, 2nd, and 3rd Stage NCU, 1st, 2nd, and 3rd Stage electronic power supplies and switching relays. | 1. D2-7828 Functional Test Procedures Power Supply Group |
| The testing shall include: | |
| 1. No-load voltage regulation; | |
| 2. Full load voltage regulation; | |
| 3. Relay switching; | |
| 4. Ripple. | |
| - - - - - - - - - - - - - - - - - - - - - - - - - - - - | 2. See equipment list at left. |
| Multimeter (ACO 4001) | |
| Test Fixture, Power Supply MAB & CPA (FSE 7780) | |
| Voltmeter, Differential AC-DC (ACO 422) | |
| Oscilloscope 545 (ACO 4004) | |
| Ammeter 0-500 amps and shunts (ACO 347) | |
| Load Banks 0-350 amps (ACO 388) | |
| Power Supply (ACO 4127) | |
| Oscilloscope, Plug-in-Unit (ACO 4172) | |

| ASSEMBLY OR CHECKOUT FUNCTION AND TECHNICAL REQUIREMENTS | RECOMMENDED EQUIPMENT OR DOCUMENT |
|---|---|
| 8.2 CHECKOUT OF INDIVIDUAL UNITS (CONT) | |
| J. Distribution Box, NCU Test, CPA (FSE 7683) | |
| No test required. | |
| K. Cable Tester (ACO 402) and Adapter Cables, Test Set - Raceway Cables (FSE 7715) | |
| The testing shall include: | 1. Multimeter (ACO 4001) |
| 1. Programming check; | 2. Manufacturer's Manual (ACO402) |
| 2. Continuity check; | 3. D2-10977 Functional Test Procedure |
| 3. Measure test voltage. | |
| L. Power Supply Group, NCU Linkage Adjustment, CPA (FSE 7744) | |
| Testing shall include: | 1. D2-7828 Functional Test Procedures, Power Supply Group |
| 1. No load voltage regulation; | 2. See support test equipment for function C8.2, item D. |
| 2. Full load voltage regulation; | |
| 3. Relay switching; | |
| 4. Ripple. | |

| ASSEMBLY OR CHECKOUT FUNCTION AND TECHNICAL REQUIREMENTS | RECOMMENDED EQUIPMENT OR DOCUMENT |
|---|---|
| 8.2 CHECKOUT OF INDIVIDUAL UNITS (CONT) | |
| M. Distribution Box, NCU Linkage Adjustment, CPA (FSE 7743) | |
| No test required. | |
| N. Cable Assemblies - NCU Linkage Adjustment, CPA (FSE 7742) | |
| No test required. | |
| O. Test Set, NCU Zero Alignment (FSE 7724) | |
| Test performed in C7.1. | |
| 8.3 CHECKOUT OF SUBSYSTEMS | |
| Where applicable individual equipment shall be connected to form subsystems and checked out as such. Detailed test procedures are required. | |
| 8.3.1 PERFORM SUBSYSTEM TEST OF PROGRAMMING TEST SET, C91, AND GUIDANCE AND CONTROL TEST GROUP, C89 | 1. C89/C91 Self Test/Certification Tape (Part of ACO 0622) R |
| The C91/C89 subsystem shall be tested with C89/91 self test/cert tape for the C91. The C91 was checked out in C8.2. | 2. D2-11290 Functional Test Procedures C89 |
| | 3. Recording Station (ACO 273) [illegible] for C89 [illegible] (ACO 20709) |

| ASSEMBLY OR CHECKOUT FUNCTION AND TECHNICAL REQUIREMENTS | RECOMMENDED EQUIPMENT OR DOCUMENT |
|---|---|
| 8.4 SYSTEM CHECKOUT<br>The requirement exists to checkout and verify the compatibility of the test position with the airborne equipment. The system checkout shall be accomplished by connecting the test cables to the equipment and programming the C91 test set with the applicable test tape. Detailed test procedures are required. | |
| 8.4.1 GUIDANCE AND CONTROL SECTION TEST AREA<br>The Guidance and Control Section test position shall be verified by the normal test program, conducted in E1.3, using the G&C Section of the first Ground Test Missile, GTM 77, or airborne production hardware. The results of the test shall be determined by automatic printout on the C91. | 1. G&C Section GTM 77 (A/B 6201)<br>2. Program Tapes G&C Test (ACO 10729) NS10P Model A (ACO 12008) NS10P Model B (ACO 10735) NS10Q Model A (ACO 10736) NS10Q Model B<br>3. Adapter, Spanner Wrench (ACO 3119)<br>4. D2-11323, Functional Test Procedures - G&C Section<br>5. Missile C/O Console/NS10 Program Tapes NS10P Model A (FSE 12013) NS10Q Model B (FSE 12014) |
| 8.4.2 NCU AND ACCELEROMETER TEST AREA<br>The NCU and Accelerometer Test Position shall be verified by the normal test program in E1.3 using the NCU(s and Accelerometer of the first Ground Test Missile (GTM 77) or airborne production hardware. The results of the test shall be determined by automatic printout on the C91 | |

FUNCTION C8.4

| ASSEMBLY OR CHECKOUT FUNCTION AND TECHNICAL REQUIREMENTS | RECOMMENDED EQUIPMENT OR DOCUMENT |
|---|---|
| 8.4.2 NCU AND ACCELEROMETER TEST POSITION (CONT) | |
| D2-11304, Functional Test Procedures, Angular Accelerometer, P68A | 1. See Documents & Equipment listed at left. |
| D2-11305, Functional Test Procedures, Angular Accelerometer, P68B | |
| D2-11306, Functional Test Procedures-NCU, Stage I, P70A | |
| D2-11307, Functional Test Procedures-NCU, Stage I, P70B | |
| D2-11308, Functional Test Procedures-NCU, Stage II, P71A | |
| D2-11309, Functional Test Procedures-NCU, Stage II, P71B | |
| D2-11310, Functional Test Procedures-NCU, Stage III, P72A | |
| D2-11311, Functional Test Procedures-NCU, Stage III, P72B | |
| Program Tape, NCU Test (FSE 12009) (Model A) | |
| Program Tape, NCU Test (FSE 12010) (Model B) | |
| Program Tape, Accelerometer Test (FSE 12011) (Model A) | |
| Program Tape, Accelerometer Test (FSE 12012) (Model B) | |
| NCU Stage I, II, III, and angular accelerometer of GTM 77. (A/B 6203, A/B 6204, A/B 6205, and A/B 6202 respectively). | |
| Recording Station (ACO 273) | |
| 8.4.3 DRAWER MAINTENANCE TEST AREA | |
| This test position requires checkout of the C90 with the use of the C91 Programmer. | 1. D2-11292 Functional Test Procedure Programming Group C90<br>2. Selt Check Tape for C90 (Part of ACO 0622) |

| ASSEMBLY OR CHECKOUT FUNCTION AND TECHNICAL REQUIREMENTS | RECOMMENDED EQUIPMENT OR DOCUMENT |
|---|---|
| 8.4.4 NCU LINKAGE ADJUSTMENT TEST AREA | |
| The NCU Linkage Adjustment Test Area shall be verified by connecting to either Stage I or Stage II and Stage III NCU's of GTM 77 or airborne, production hardware and performing the required adjustments. | 1. NCU Linkage Adjustment Test Area Equipment See C8.1B.<br>2. D2-13732 NCU Linkage Adjustment Procedures<br>3. For Gage Sets Check Plates, and Equipment See B3.1.1 |
| 8.4.5 CABLE TEST SET COMPATIBILITY TEST | |
| A requirement exists to demonstrate compatibility of the raceway cable test area with the missile raceway cables.<br><br>One set of raceway cables shall be placed in the raceway cable containers (ACO's 457, 458 and 459) and transferred to the cable test area where the cables shall be connected to the test set adapter cables and the test set, and a test performed on each cable per function E1.3.2.2D. Upon completion of the test, the raceway cables will be returned to their normal flow. | 1. Adapter Cables, Test Set, Raceway Cables (FSE 7715)<br>2. Cable Tester (ACO 402)<br>3. Container, Raceway Cable, Stage I (ACO 459)<br>4. Container, Raceway Cable, Stage II (ACO 458)<br>5. Container, Raceway Cable, Stage III (ACO 457) |

FUNCTION C8.4.4

| ASSEMBLY OR CHECKOUT FUNCTION AND TECHNICAL REQUIREMENTS | RECOMMENDED EQUIPMENT OR DOCUMENT |
|---|---|
| 8.5 RADIO FREQUENCY TEST<br>The requirement exists to verify that the test positions will meet RFI requirements. This test shall be accomplished using airborne electronics of the first Ground Test Missile (GTM 77) or airborne, production hardware. Detailed test procedures are required. | |
| 8.5.1 PERFORM RFI TEST | 1. D2-10025, Electro-Interference Test Plan for WS-133A System, A/F Plant 77<br>2. The equipment required to conduct the Radio Frequency Interference Tests will be listed in the RFI Test Procedure Document |

| ASSEMBLY OR CHECKOUT FUNCTION AND TECHNICAL REQUIREMENTS | RECOMMENDED EQUIPMENT OR DOCUMENT |
|---|---|
| 9.0 ASSEMBLY AND CHECKOUT OF MAB<br>The assembly and checkout of the Missile Assembly Building shall consist of installation and testing of all FSE and ACO equipment required to assemble and test the missile. Certification of equipment can be done either in the Cert/Cal Laboratory or at equipment location. Detail test procedures and drawings are required. | |
| 9.1 EQUIPMENT INSTALLATION<br>The following equipment shall be required in the Missile Assembly Building to assemble and test the missile as defined in B5 through B12. Install the equipment by uncrating and positioning. | 1. Megger, Ground (ACO 365)<br>2. Ohmmeter (ACO 4381)<br>3. Truck, Lift-Fork (ACO 453) R<br>4. Installation Drawings 177-00-109 (Facility Drawings)<br>5. Hoist, Overhead, Rail Type (Facilities) |
| A. C95, D. C. Power Supply, Portable (ACO 0667) | |
| B. Scaffolding, Missile Access (FSE 7630) | 1. Truck, Lift-Fork (ACO453) R<br>2. Alignment Set-Missile Transfer (ACO 4535)<br>3.<br>4. Truck, Lift-Jack (ACO 461 ) R |

| ASSEMBLY OR CHECKOUT FUNCTION AND TECHNICAL REQUIREMENTS | RECOMMENDED EQUIPMENT OR DOCUMENT |
|---|---|
| 9.1 EQUIPMENT INSTALLATION (CONT) | |
| C. Rails, Missile Joining (FSE 7628) | |
| D. Power Supply Group, MAB (FSE 7717) | |
| E. Box Test, Ordnance Cable (FSE 7740) | |
| F. Junction Box, Test, MAB (FSE 7721) | |
| G. Cable Assy, NCU Test, MAB (FSE 7719) | |
| H. Test Set, NCU Zero Alignment (FSE 7724) | |
| I. Cable Assembly, Umbilical, MAB (FSE 7720) | |
| J. Cable Assembly, Interconnecting, MAB (FSE 7718) | |
| K. Fixture, Support-Umbilical Cabling, MAB (FSE 7619) | |
| L. Liquid Cooling Equipment, Ground Guidance and Control (ACO 9278) | |
| M. Console, Missile Checkout, (FSE 7723) | |
| N. T. V. Monitor, Closed Circuit (ACO 350) | |
| The system consists of T. V. cameras located in MAB to view the assembly and checkout operation and consists of camera control unit and T. V. Monitor. | |
| O. Purging and Drying Kit - G&C Section (ACO 466) | |
| P. Auxiliary Junction Box (MAB) (FSE 7739) | |
| [illegible] | |
| Q. Test Set Assembly, Ordnance Circuit (FSE 7679) | |
| R. Simulators, Airborne Components (FSE 7695) | |

| ASSEMBLY OR CHECKOUT FUNCTION AND TECHNICAL REQUIREMENTS | RECOMMENDED EQUIPMENT OR DOCUMENT |
|---|---|
| 9.2 CHECKOUT OF INDIVIDUAL UNITS<br>The requirement exists to checkout each individual unit installed. Equipment that must be operated with other equipment shall be tested as a system, see C9.3. Detailed test procedures are required. | |
| A. C95 PORTABLE POWER SUPPLY (ACO 0667)<br>Testing shall include:<br>1. Voltage output measurement;<br>2. Battery charger operation. | 1. D2-11299 Functional Test Procedure C95 Portable Power Supply |
| Power Supply - (ACO 4127)<br>Recorder, (ACO 10701)<br>Voltmeter, Differential AC-DC (ACO 422)<br>Multimeter (ACO 4001) | 2. See equipment list at left. |
| B. Power Supply Group, MAB (FSE 7717)<br>Testing shall include:<br>1. No load voltage regulation;<br>2. Full load voltage regulation;<br>3. Relay operation;<br>4. Ripple. | 1. D2-7828, Functional Test Procedures Power Supply Group |
| Multimeter (ACO 4001)<br>Test Fixture, Power Supply, MAB & CPA (FSE 7780)<br>Voltmeter, Differential (ACO 422)<br>Oscilloscope (ACO 4004) | 2. See equipment list at left. |

FUNCTION C9.2

| ASSEMBLY OR CHECKOUT FUNCTION AND TECHNICAL REQUIREMENTS | RECOMMENDED EQUIPMENT OR DOCUMENT |
|---|---|
| 9.2 CHECKOUT OF INDIVIDUAL UNITS (CONT) | |
| B. Equipment list (cont) | |
| Ammeter 0-500 amps and shunts (ACO 347) | |
| Load Banks 0-350 amps (ACO 388) | |
| Power Supply (ACO 4127) | |
| Oscilloscope, Plug-in-Unit (ACO 4172) | |
| - - - - - - - - - - - - - - - - - - - - - - - - - - - - - - - - | |
| C. Junction Box, Test, MAB (FSE 7721) | |
| No test required. | |
| D. Cable Assy, NCU Test, MAB (FSE 7719) | |
| No test required. | |
| E. Test Set, NCU Zero Alignment (FSE 7724) | |
| Test performed in test C7.1. | |
| F. Cable Assembly, Umbilical, MAB (FSE 7720) | |
| No test required. | |
| G. Cable Assembly, Interconnecting, MAB (FSE 7718) | |
| No test required. | |
| H. Liquid Cooling Equipment, Ground Guidance and Control (ACO 9278) | 1. Test Set, Cooler Liquid, Guidance Section (ACO 3035) |
| The cooling unit coolant tanks will be filled with distilled or deionized water containing sodium chromate inhibitor. The cooling unit, G&C testing, shall include: | 2. D2-10752 Functional Test Procedures, G&C Cooling Unit<br>3. D2-13915, Def. & Associated Req'ts G&C Cooling<br>4. See additional Equipment at left on next page. |
| 1. Temperature control circuits: | |
| 2. Coolant flow rate; | |
| 3. Coolant temperature. | FUNCTION C9.2 |

| ASSEMBLY OR CHECKOUT FUNCTION AND TECHNICAL REQUIREMENTS | RECOMMENDED EQUIPMENT OR DOCUMENT |
|---|---|
| 9.2 CHECKOUT OF INDIVIDUAL UNITS (CONT) | |
| Valve (ACO 719)<br>Cable Adapter, Error, Indication Test (ACO 731)<br>Cable Adapter, No-Go and Gross Temperature Test, G&C Ground Cooling Equipment (ACO 732)<br>Bimetal Thermometer (ACO 749)<br>Flowmeter (ACO 752)<br>Pressure Sensor (ACO 753)<br>Flowmeter (ACO 754)<br>Reservoir (ACO 769)<br>Resistance Box, Decade (ACO 0593)<br>Ammeter, AC/DC (ACO 4461)<br>Conductivity Cell (ACO 674)<br>Microscope (ACO 315)<br>Adapter, Flow (G&C) Umbilical (ACO 200)<br>Test Kit Chromate (ACO 4623)<br>Sampling Bomb (ACO 313) | |
| I. Console, Missile Checkout (FSE 7723)<br><br>Tests will include:<br><br>1. Timer Operation;<br>2. Test commands output;<br>3. Interlock circuitry;<br>4. Cooling alarm circuitry;<br>5. Safe & Arm circuitry;<br>6. Squib Test. | 1. Test Set, Missile Checkout Console (FSE 7675)<br>2. D2-10123 Functional Test Procedures - Missile Checkout Console<br>3. Voltmeter, Differential (ACO 422)<br>4. Stop Watch (ACO 3059)<br>5. Power Supply (ACO 393) |
| J. Auxiliary Junction Box (MAB) (FSE 7739)<br><br>No test required. | |

| ASSEMBLY OR CHECKOUT FUNCTION AND TECHNICAL REQUIREMENTS | RECOMMENDED EQUIPMENT OR DOCUMENT |
|---|---|
| 9.3 SYSTEM CHECKOUT<br>The requirement exists to checkout the MAB Test Position. The system checkout shall be accomplished by connecting the test equipment and conducting the complete test program. | |
| 9.3.1 NCU TEST POSITION<br>The NCU test position, consisting of a Stage I, Stage II and Stage III test station, shall be integrated by connecting the NCU test cables to laboratory test equipment. The tests at each test station shall include but not be limited to:<br>1. Timer operation on the BGS-77.<br>(The timer shall start running when the hydraulic power is turned on and shall terminate this power when 3 minutes have elapsed.)<br>2. Power application at the power plug terminals.<br>(The electronic and hydraulic power shall be applied to the proper terminals when the appropriate switch is activated on the BGS-116)<br>NOTE: The procedures shall be similar to the operating test procedures. | 1. MAB Equipment (See C9.1)<br>2. Multimeter (ACO 4001)<br>3. D2-9262, Vol. 9 Site Acceptance Test Procedures Plant 77<br>4. Set, Connector (ACO 267) |
| 9.3.2 MISSILE TEST POSITION<br>The missile test position shall be integrated by connecting the umbilical cables to the Missile Checkout Console Test Set and programming the normal | 1. D2-9262, Vol. 9 Site Acceptance Test Procedures Plant 77<br>2. Test Set, Missile Checkout Console (FSE 7675) |

FUNCTION C9.3

| ASSEMBLY OR CHECKOUT FUNCTION AND TECHNICAL REQUIREMENTS | RECOMMENDED EQUIPMENT OR DOCUMENT |
|---|---|
| 9.3.2 MISSILE TEST POSITION (CONT)<br>and secondary test programs to insure proper operation of the ground equipment. | 3. MAB Equipment, (See C9.1)<br>4. Adapter, Spanner Wrench (ACO 3119)<br>5. Test Set Assembly, Ordnance Circuit (FSE 7679) |
| 9.4 MAB COMPATIBILITY AND RADIO FREQUENCY INTERFERENCE TESTS<br>The requirement exists to establish that test equipment will perform the required test on the airborne equipment (GTM 77), and verify that the RFI requirements are met. Detail test procedures are required. (See B5 through B10 for test requirements). | For Gage Sets & Check Plates; Procedures & Equipment (See B6.1) |
| 9.4.1 PERFORM COMPATIBILITY TEST<br>The compatibility tests are accomplished by connecting, the ground equipment to the airborne equipment (GTM 77) and conducting the normal SM 80 Functional Test Procedures. | 1. D2-9520, Missile Functional Test Procedures<br>2. Equipment See B5 through B10<br>3. D2-13445 Ordnance Comp. and Subsystem Test Procedures |
| 9.4.2 PERFORM RADIO FREQUENCY INTERFERENCE TEST<br>NOTE: RFI testing shall be concluded at the successful completion of tests conducted in the first two MAB's. | 1. D2-10025 RFI Test Procedures<br>2. The equipment required to conduct the Radio Interference Tests will be listed in the RFI Test Procedures Document. |

FUNCTION C9.4

| ASSEMBLY OR CHECKOUT FUNCTION AND TECHNICAL REQUIREMENTS | RECOMMENDED EQUIPMENT OR DOCUMENT |
|---|---|
| 10.0 ASSEMBLY AND CHECKOUT OF ORDNANCE PROCESSING AREA<br>The requirements exists to assemble and checkout the equipment used to process and test the airborne ordnance components. Detailed installation drawings and check-out procedures are required. | |
| 10.1 INSTALL EQUIPMENT<br>The following equipment is required in the Ordnance Process Area to test the ordnance components. The ground plane and equipment bonds shall be checked.<br>A. Test Set, Ordnance, Electrical (FSE 13)<br>B. Fixture, Test - Ordnance Device (FSE 7678)) | 1. Installation Drawings 177-00-109 (Facilities Dwgs)<br>2. Ohmmeter (ACO 4381)<br>3. Megger, Ground (ACO 365)<br>4. Resistor Decade (ACO 907) |
| 10.2 CHECKOUT OF ORDNANCE TEST EQUIPMENT<br>The testing shall include:<br>a. comparator circuit<br>b. indicator lights<br>c. Power supply voltage regulation<br>d. time base generator and timing output | 1. D2-12206 Preassembly Test Ordnance Test Set<br>2. Multimeter (ACO 4001)<br>3. Counter (ACO____)<br>4. Resistor Decade (ACO 4368) |
| 10.3 ORDNANCE TEST SET COMPATABILITY TEST<br>The compatability test shall be accomplished by connecting the Ordnance Electrical Test Set to airborne components (Spares) which have been placed on the test fixture in the chamber and conducting the tests specified in Section B3.3. | 1. D2-13483 Detonator Test Procedure<br>2. D2-12368, Ignitor Safe and Arm Functional Test Procedure<br>3. D2-13482 Arm/Disar Functional Test Procedure<br>4. D2-11776 Thrust Termination Switch Functional Test Procedures |

| ASSEMBLY OR CHECKOUT FUNCTION AND TECHNICAL REQUIREMENTS | RECOMMENDED EQUIPMENT OR DOCUMENT |
|---|---|
| 11.0 ASSEMBLY AND CHECKOUT OF MISSILE AND MOTOR STORAGE AREA<br>The requirement exists to install and checkout the equipment used in the Missile and Engine Storage Igloos. Detail installation drawings and checkout procedures are required. | |
| 11.1 INSTALL EQUIPMENT<br>The following equipment is required in the Missile and Motor Storage Igloos, the igloo ground plane and equipment bonds shall be checked.<br>A. Rails-Storage, Engine and Missile (FSE 7629);<br>B. Alarm System (Facility);<br>C. Recorder, Temperature (Facility ).<br>D. Recorder, Humidity (Facility).<br>NOTE: The GTM Missile Storage Rails (FSE 7685) are required in Bldg. 1264 for Storage of GTM 77. | |
| Installation Drawings 177-00-109 (Facilities Drawings)<br>Ohmmeter, (ACO 4381)<br>Megger, Ground (ACO 365)<br>Alignment Set, Missile Transfer (ACO 4535)<br>Cable Assembly, Power Electrical, Portable Flood Lamps (ACO 449)<br>Portable Flood Lamps, AC (ACO 4425)<br>Truck, Lift-Fork (ACO 453 ) | 1. See equipment list at left. |

| ASSEMBLY OR CHECKOUT FUNCTION AND TECHNICAL REQUIREMENTS | RECOMMENDED EQUIPMENT OR DOCUMENT |
|---|---|
| 11.2 PERFORM COMPATIBILITY TEST, MISSILE AND MOTOR STORAGE AREA<br><br>A requirement exists to demonstrate compatibility of the SSCBM, Ballistic Missile Trailer, and motore handling harnesses to the Missile and Motor Storage Bldg. rails, during transfer of the 1st ground test missile produced. | 1. D2-13907 Transportation and Handling Procedures Plant 77 |

| ASSEMBLY OR CHECKOUT FUNCTION AND TECHNICAL REQUIREMENTS | RECOMMENDED EQUIPMENT OR DOCUMENT |
|---|---|
| 12.0 MISSILE HANDLING COMPATIBILITY TEST<br>The requirement exists to verify the compatibility of Missile Assembly Building, Ground Test Missile Training Building, Missile Storage Igloo rails, and all ground handling equipment. | |
| 12.1 TRANSFER MISSILE FROM MAB TO MSB<br>The missile transfer from MAB to MSB consists of preparing Ground Test Missile for transfer from MAB to SSCBM and from SSCBM to MSB. See B13.0. This transfer includes:<br>A. B13.1 Prepare for Missile Transfer Roll from MAB<br>B. B13.2 Transfer Missile to SSCBM<br>C. B13.3 Transport to Missile Storage, SSCBM Transient Storage, on Rail Loading Area<br>D. B13.6 Prepare for Missile Transfer to Storage<br>E. B13.7 Transfer Missile to Storage Rails<br>F. B13.8 Store as required<br>G. B13.9 Prepare for Missile Transfer from Storage<br>H. B13.10 Transfer Missile to SSCBM from Storage | 1. See B13.0 for Procedures Doc.<br>2. See B13 for Equipment |
| 12.2 TRANSFER MISSILE TO RAIL CAR LOADING AND AIRPLANE LOADING<br>The missile transfer from MAB to Rail Car consists of missile transfer from MAB to SSCBM and transfer to SSCBM to Rail Car. See B13. | 1. See B13 for Procedures Document<br>2. See B13 for Equipment |

FUNCTION C12.0

| ASSEMBLY OR CHECKOUT FUNCTION AND TECHNICAL REQUIREMENTS | RECOMMENDED EQUIPMENT OR DOCUMENT |
|---|---|
| 12.2 TRANSFER MISSILE TO RAIL CAR LOADING AND AIRPLANE LOADING (CONT) | |
| A. B13.1 Prepare for Missile Transfer Roll from MAB | |
| B. B13.2 Transfer Missile to SSCBM | |
| C. B13.3 Transport to Missile Storage, SSCBM Transient Storage, or Rail Loading Area | |
| D. B13.5 Transfer SSCBM on Ballistic Missile Trailer to Rail Car | |
| E. B13.4 Transfer SSCBM to Airplane | |
| 12.3 TRANSFER GTM 077 FROM SSCBM TO GTM 077 TRAINING BUILDING | |
| The ground test missile transfer from the SSCBM to the training building (BLDG 1264) is required for storage of GTM 077. | D2-13907 Transportation and Handling Procedures, Plant 77 |
| 12.3.1 PREPARE FOR TRANSFER | |
| Preparation for roll transfer involves positioning the Ballistic Missile Trailer, removing the tractor, installing translating and alignment equipment, and transferring the SSCBM to the GTM 077 Storage Rails. The following is required: | |
| A. A means to support the missile on the Rocket Motor Carriages and provide for missile roll transfer. These rails shall include snatch blocks and grounding cables for missile transfer; | Rails - Storage, Missile GTM 077 (FSE 7685) |

FUNCTION C12.2

| ASSEMBLY OR CHECKOUT FUNCTION AND TECHNICAL REQUIREMENTS | RECOMMENDED EQUIPMENT OR DOCUMENT |
|---|---|
| 12.3.1 PREPARE FOR TRANSFER | |
| A. (Continued) wheel blocks, provisions for Rocket Motor Carriage grounding, and rail extension with provisions to match the SSCBM rails. | |
| B. A means to connect the trailer transfer cables to the Missile Support Adapter Ring for GTM transfer. | Clamp Assembly, Missile Transfer (FSE 7686) |
| C. A means to support and align (dimensionally three ways) the Ballistic Missile Trailer to the GTM 77 Storage rails. | Jack, Translating (ACO 4175) |
| D. A means to check alignment of SSCBM rails to the GTM 77 storage rails preparatory to roll transfer. The rails must be aligned within specific limits to insure against imposing excessive loads on the GTM during transfer. | Alignment Set, Missile Transfer (ACO 4535) |
| E. A means to discharge static electricity by grounding Ballistic Missile Trailer to ground terminal. | Lead, Electrical Grounding (ACO 352) |
| 12.3.2 TRANSFER GTM 077 TO GTM 077 TRAINING BUILDING | |
| Roll transfer shall be accomplished by using the Ballistic Missile Trailer winches as a power and restraint source. This operation also includes grounding the GTM on its carriages to the storage rails, and removing the transfer equipment. | |

FUNCTION B12.3.1

C2 - SUPPORT OR MAINTENANCE EQUIPMENT FOR A/B CHECKOUT EQUIPMENT

# PLANT 77 ASSEMBLY & CHECKOUT EQUIPMENT LIST

| IDENT. NO. | NOMENCLATURE | CLASS | LOCATION & FUNCTION | | | | | |
|---|---|---|---|---|---|---|---|---|
| | | | CPA | MAB | Missile & Motor Storage | Maint. Support Area | Missile Transfer Area | MISC |
| 7675 | Test Set, Console, Missile Checkout | FSE | | C9.2,C9.3 | | C7.1 | | |
| 7736 | Cable Assembly, Power, C90-C91 Test Position | FSE | C8.1 | | | | | |
| 7696 | Test Set & Adopter Cables, Raceway Cables | FSE | | [illegible] | [illegible] | C7.1 | | |
| 7780 | Test Fixture, Power Supplies, MAB & CPA | FSE | C8.2 | C9.2 | | | | |
| 10151 | Gage, NCU Alignment, Stage I | FSE | C8.4 | | | | | |
| 10153 | Gage, Verification, NCU Stage I | FSE | | C9.4 | | | | |
| 10155 | Gage, NCU Alignment, Stage II | FSE | C8.4 | | | | | |
| 10157 | Gage, Verification NCU Stage II | FSE | | C9.4 | | | | |
| 10159 | Gage, NCU Alignment Stage III | FSE | C8.4 | | | | | |

# PLANT 77 ASSEMBLY & CHECKOUT EQUIPMENT LIST

| IDENT. NO. | NOMENCLATURE | CLASS | LOCATION & FUNCTION | | | | | |
|---|---|---|---|---|---|---|---|---|
| | | | CPA | MAB | Missile & MOTOR Storage | Maint. Support Area | Missile Transfer Area | MISC |
| 10161 | Verification Gage, NCU, Stage III | FSE | | C9.4 | | | | |
| 12013 | Missile Checkout Console/NS10P Tape | FSE | C8.4 | | | | | |
| 12014 | Missile Checkout Console/NS10Q Tape | FSE | C8.4 | | | | | |
| ACO 10729 & 12008 | Program Tapes, G&C Test (NS10P) | ACO | C8.4 | | | | | |
| 12011 12012 | Program Tapes, Accelerometer Test | FSE | C8.4 | | | | | |
| 12009 12010 | Program Tapes, NCU Test | FSE | C8.4 | | | | | |
| Part of ACO 0622 | Self Check Tape for C90 Test Group Electronic System | FSE | C8.4 | | | | | |
| Part of ACO 0622 | Self Check Tape for C91 Test Group Programmer | FSE | C8.2 | | | | | |
| Part of ACO 0622 | C89/C91 Self Test/Certification Tape (P/N PT D0108-0004-01-01) | FSE | C8.3 | | | | | |
| ACO 10735 ACO 10736 | Program Tapes, G&C Test (NS10Q) Model A Model B | ACO | C8.4 | | | | | |
| ACO 719 | Valve | SFC/OH | C8.2 | | | | | |
| ACO 731 | Cable Adapter, Error Indication Test | SFC/OH | C8.2 | | | | | |
| ACO 732 | Cable Adapter, No-GO & Gross Temp. Test, G&C Ground Cooling | SFC/OH | C8.2 | | | | | |
| ACO 749 | Bimetal Thermometer | SFC/OH | C8.2 | | | | | |
| ACO 752 | Flowmeter | SFC/OH | C8.2 | | | | | |

C2 - SUPPORT OR MAINTENANCE EQUIPMENT FOR A/B CHECKOUT EQUIPMENT

# PLANT 77 ASSEMBLY & CHECKOUT EQUIPMENT LIST

| IDENT. NO. | NOMENCLATURE | CLASS | LOCATION & FUNCTION | | | | | |
|---|---|---|---|---|---|---|---|---|
| | | | CPA | MAB | Missile & Motor Storage | Maint. Support Area | Missile Transfer Area | MISC |
| ACO 0623 | Test Group, Ground Electronic System, C-90 | ACO | C8.1,C8.2 | | | | | |
| ACO 0624 | Test Set, Programming, C91 | ACO | C8.1,C8.2 | | | | | |
| ACO 268 | Tape Perforator and Verifier | ACO | | | | C6.1,C6.2 | | |
| ACO 3035 | Test Set, Cooler, Liquid, Guidance Section | ACO | C8.2 | C9.2 | | C6.1,C6.2 | | |
| ACO 3119 | Adapter, Spanner Wrench | ACO | C8.4 | C9.3 | | | | |
| P.N. 64980-305 | Self Test Unit (C91) | ACO | C8.2 | | | | | |
| ACO 4535 | Alignment Set, Missile Transfer | ACO | | C9.1 | C11.1, C12.3 | | | |
| ~~ACO 0599~~ | ~~Load Simulator~~ | ~~ACO~~ | ~~C8.2~~ | ~~C9.2~~ | | | | |
| ACO 753 | Pressure Sensor | SFC/OH | C8.2 | | | | | |
| ACO 754 | Flowmeter | SFC/OH | C8.2 | | | | | |
| ACO 769 | Reservoir | SFC/OH | C8.2 | | | | | |
| ACO 0593 | Resistance Box, Decade | SFC/OH | C8.2 | | | | | |
| ACO 4461 | Ammeter, AC/DC | SFC/OH | C8.2 | | | | | |
| ACO 200 | Adapter Flow (G&C) Umbilical | SFC/OH | C8.2 | C9.2 | | | | |
| ACO 315 | Microscope | SFC/OH | C8.2 | C9.2 | | | | |
| ACO 674 | Conductivity Cell | SFC/OH | C8.2 | C9.2 | | | | |
| ACO 4623 | Test Kit Chromate | SFC/OH | C8.2 | C9.2 | | | | |
| ACO 313 | Sampling Bomb | SFC/OH | C8.2 | C9.2 | | | | |

C2 * SUPPORT OR MAINTENANCE EQUIPMENT FOR A/B CHECKOUT EQUIPMENT

# PLANT 77 ASSEMBLY & CHECKOUT EQUIPMENT LIST

| IDENT. NO. | NOMENCLATURE | CLASS | LOCATION & FUNCTION | | | | | |
|---|---|---|---|---|---|---|---|---|
| | | | CPA | MAB | Missile & Motor Storage | Maint. Support Area | Missile Transfer Area | MISC |
| ACO 308 | Inclinded Manometer | SFC/OH | C8.1 | | | | | |
| ACO 323 | Tester, Transister | SFC/OH | | | | C6.1 | | |
| ACO 324 | Test Set, Multipurpose Portable Radio | SFC/OH | | | | C6.1 | | |
| ACO 326 | Generator, Video Sweep to 20 Megacycles | SFC/OH | | | | C6.1 | | |
| ACO 327 | Tester Vacuum Tube, Mutual Conductance Type | SFC/OH | | | | C6.1 | | |
| ACO 328 | Microphone | SFC/OH | | | | C6.1 | | |
| ACO 330 | EIA Resolution Chart | SFC/OH | | | | C6.1 | | |
| ACO 331 | Wattmeter, Radio Frequency | SFC/OH | | | | C6.1 | | |
| ACO 332 | Monitor, Radio Station (FM) | SFC/OH | | | | C6.1 | | |
| ACO 334 | Load, Dummy | SFC/OH | | | | C6.1 | | |
| ACO 335 | Probe, Detector Attenuator | SFC/OH | | | | C6.1 | | |
| ACO 336 | High Voltage DC Probe | SFC/OH | | | | C6.1 | | |
| ACO 337 | Voltmeter, Vacuum Tube | SFC/OH | | | | C6.1 | | |
| ACO 325 | Generator, Signal, F-M | SFC/OH | | | | C6.1 | | |
| ACO 273 | Recording Station | SFC/OH | C8.3,C8.4 | | | | | |
| ACO 352 | Lead Electrical Grounding | SFC/OH | | | B12.3.1 | | | |

# PLANT 77 ASSEMBLY & CHECKOUT EQUIPMENT LIST

| IDENT. NO. | NOMENCLATURE | CLASS | LOCATION & FUNCTION | | | | | |
|---|---|---|---|---|---|---|---|---|
| | | | CPA | MAB | Missile & Motor Storage | Maint. Support Area | Missile Transfer Area | MISC |
| ACO 345 | Power Supply, Type 128, Tektronix | SFC/OH | | | | C6.1 | | |
| ACO 347 | Ammeter, Model 901, Weston with 500 Amp-Ammeter Shunt | SFC/OH | C8.2 | C9.2 | | | | |
| ACO 362 | Megohmmeter | SFC/OH | | | | C6.1 | | |
| ACO 365 | Megger, Ground | SFC/OH | C8.1 | C9.1 | C11.1 | C6.1 | | C10.1 |
| ACO 376 | Power Supply | SFC/OH | | | | C6.1 | | |
| ACO 388 | Load Banks, 0-350 Amps | SFC/OH | C8.2 | C9.2 | | | | |
| ACO 391 | Volt Box, AC Power Supply | SFC/OH | | | | C7.1 | | |
| ACO 393 | Power Supply | SFC/OH | | C9.2 | | | | |
| ACO 422 | Differential Voltmeter AC-DC | SFC/OH | C8.2 | C9.2 | | C7.1 | | |
| ACO 448 | Camera and Tripod, Still Picture | SFC/OH | | | | | | C2.1 |
| ACO 452 | Truck, Motor-Misc. Delivery | SFC/OH | | | | | | C1.3, C3.0 |
| ACO 453 | Truck, Lift-Fork | SFC/OH | | C9.1,C9.3 | C11.1 | C6.1 | | C2.2, C1.3, C3.0 |
| ACO 461 | Truck, Lift-Jack | SFC/OH | | C9.1,C9.3 | | | | C2.2 |
| ACO 463 | DC Power Supply | SFC/OH | | | | C7.1 | | |
| ACO 3059 | Stop Watch | SFC/OH | | C9.2 | | | | |
| ACO 3076 | Thermometer | SFC/OH | C8.2 | | | | | |
| ACO 4001 | Multimeter | SFC/OH | C8.2 | C9.2,C9.3 | | C6.1,C7.1 | | C10.2 |
| ACO 4368 | Decade Box | SFC/OH | | | | C7.1 | | C10.2 |

# PLANT 77 ASSEMBLY & CHECKOUT EQUIPMENT LIST

| IDENT. NO. | NOMENCLATURE | CLASS | LOCATION & FUNCTION | | | | | |
|---|---|---|---|---|---|---|---|---|
| | | | CPA | MAB | Missile & Motor Storage | Maint. Support Area | Missile Transfer Area | MISC |
| ACO 4004 | Oscilloscope | SFC/OH | C8.2 | C9.2 | | C6.1,C7.1 | | |
| ACO 4127 | Power Supply | SFC/OH | C8.2 | C9.2 | | | | |
| ACO 4172 | Oscilloscope, Plug-In-Unit | SFC/OH | C8.2 | C9.2 | | C6.1 | | |
| ~~ACO 4190~~ | ~~Meter, Installation, Flow Rate Indicating~~ | ~~SFC/OH~~ | ~~C8.2~~ | | | | | |
| ACO 4381 | Ommeter | SFC/OH | C8.1 | C9.1,C9.3 | C11.1 | C6.1 | | C10.1 |
| ACO 10701 | Recorder | SFC/OH | C8.2 | C9.2 | | | | |
| - | Tape, Aluminum, Mylar | Treasury Stores | | | | C6.2 | | |
| - | Hoist, Overhead, Rail Type | Facilities | | C9.1,C9.3 | | | | |
| ACO 457 | Container, Raceway Cable, Stage III | SFC/OH | B8.4 | | | | | |
| ACO 458 | Container, Raceway Cable, Stage II | SFC/OH | B8.4 | | | | | |
| ACO 459 | Container, Raceway Cable, Stage I | SFC/OH | B8.4 | | | | | |
| ACO 267 | Set Connector | SFC/OH | | C9.3 | | | | |
| ACO | Counter | SFC/OH | | | | | | C10.2 |
| ACO 929 | Test Set, Power Supply | BATE | | | | C7.1 | | |
| ACO 907 | Resistor Decade | SFC/OH | | | | | | C10.2 |
| ACO 935 | Test Tool - Test Set, Explosive Set Circuitry | ACO | | | | C7.1 | | |

## SECTION C - REQUIRED DOCUMENTS

| Document No. | Title | Section |
|---|---|---|
| D1979 | Quality Control Operating Procedures | C2.4 |
| D2-7828 | Assembly Functional Test Procedures-Power Supply Group - Plant 77, MAB and CPA | C8.2, C9.2 |
| [illegible] | [illegible] Operating Procedures, [illegible] | C10.2 |
| D2-9262 Vol. 9 | Site Acceptance Test Procedures, Plant 77 | C9.3, C8.1 |
| D2-9520 | SM-80 Functional Test Procedures -MAB - Plant 77 | C9.4 |
| D2-9918 | Calibration Equipments Summary, A/F Plant 77 | C5.0 |
| D2-10025 | Electro-Interference Test Plan for WS-133A System for Plant 77 | C8.5, C9.4, C6.3 |
| D2-10096 Vol. IV | Functional Acceptance, Test Set, NCU Zero Alignment | C7.1 |
| D2-10122 Vol. IV | Functional Test Procedure- Re-Entry Vehicle Dummy Load | C7.1 |
| D2-10123 Vol. V | Functional Test Procedures, Missile Checkout Console | C9.2 |
| D2-10752 | Functional Acceptance-G&C Ground Cooling System | C8.2, C9.2 |
| D2-10977 | Preinstallation Functional Test Procedures Adapter Cables, Test Set - Raceway Cables | C8.2 |
| D2-11290 | Functional Test Procedures Test Group - C89 | C8.3 |
| D2-11292 | Functional Test Procedures, Test Group C90 | C8.4 |
| D2-11294 | Functional Test Procedure - Programming Test Set, C91 | C8.2 |
| D2-11299 | Functional Test Procedures - C95 Portable Power Supply | C8.2, C9.2 |
| D2-11304 | Functional Test Procedures-Angular Accelerometer, P68A | C8.4 |
| D2-13915 | Definition and Associated Requirements, G&C Cooling. | C8.2,C9.2 |

SECTION C - REQUIRED DOCUMENTS (Continued)

| Doc. No. | Title | Section |
|---|---|---|
| D2-11305 | Functional Test Procedures-Angular Accelero meter, P68B | C8.4 |
| D2-11306 | Functional Test Procedures, NCU, Stage I, P70A | C8.4 |
| D2-11307 | Functional Test Procedures, NCU, Stage I, P70B | C8.4 |
| D2-11308 | Functional Test Procedures, NCU, Stage II, P71B | C8.4 |
| D2-11309 | Functional Test Procedures, NCU, Stage II, P71B | C8.4 |
| D2-11310 | Functional Test Procedures, NCU, S age III, P72A | C8.4 |
| D2-11311 | Functional Test Procedures, NCU, Stage III, P72B | C8.4 |
| D2-11323 | Functional Test Procedures, Guidance Section, NS10-P and NS10-Q | C8.4 |
| D2-11776 | Operation and Maintenance Instruction, Rocket Motor M57 | C10.3 |
| D2-12054 | Functional Test Procedure-Ordnance Circuit Test Set | C7.1 |
| D2-12075 | Calibration/certification and Test Equipment Index | C5.0 |
| D2-12196 | Pre-Assembly Test - Leakage Tester | C7.1 |
| D2-12206 | Functional Acceptance-Ordnance Electrical Test Set | C10.2 |
| D2-12368 | M55 Rocket Motor Maintenance and Repair Instructions | C10.3 |
| D2-12606 | Functional Acceptance-Test Set-Console, Missile Checkout | C7.1 |
| D2-13445 | Ordnance Component and Subsystem Functional Testing of Operational Missile, Plant 77 | C9.4 |
| D2-13482 | Functional Test Procedure, Arm/Disarm Mechanism, 10-20436 for Plant 77 | C10.3 |
| D2-13483 | Functional Test Procedures, Detonator Assembly 10-20451, for Plant 77 | C10.3 |
| D2-13732 | NCU Linkage Adjustment Procedures | C8.4 |
| D2-13907 | Transportation and Handling Procedures Plant 77 | C11.2, C12.3 |
| D2-14115 Vol. V | Functional Test Procedures Test Set Adapter Cables - Raceway Cables | C7.1 |

The following Manufacturing Manuals are required:

| | |
|---|---|
| Functional Test Procedures - Tape Perforator and verifier | C6.2 |
| Test Set, Raceway Cables | C8.2 |
| TV Monitor Equipment | C6.1 |

## SECTION C REQUIRED DRAWINGS

| Drawings | Title | Section |
|---|---|---|
| 177-00-109 | FSE/MGE Equipment Installation, Air Force Plant 77 | C6.1, C8.1<br>C9.1, C10.1<br>C11.1, C9.3 |
| 29-21442 | Functional Test Procedures - Test Box Ordnance Cables | C7.1 |
| 177-00-108 | FSE/MGE Support Equipment Installation, Air Force Plant 77 | C1.2, C1.2 |
| 177-00-112 | Facilities Installation Drawing, Air Force Plant 77 | C1.2, C6.1 |

161

**BOEING AIRPLANE COMPANY**

NUMBER D2-11162 MODEL NO. WS-133A

TITLE SECTION "D" - ASSEMBLY AND CHECKOUT EQUIPMENT

MAINTENANCE-A/F PLANT 77

PREPARED BY PLANT 77 REQUIREMENTS UNIT 6/1/61

SUPERVISED BY O. A. Severide 6/5/61
O. A. Severide

APPROVED BY W. H. Charlot 6/6/61 BI-MM
W. H. Charlot (DATE)

APPROVED BY C. R. McGehee 6/5/61 ENGINEERING
C. R. McGehee

5-78200-5120-68115
CHARGE NUMBER

99

REVISED 11-15-61 8-31-61 6-1-61

BAC 4131 B

SECTION TITLE PAGE

| VOL. | NO. D2-11162 |
|---|---|
| SEC. D | PAGE 1 |

3-7000

# ACTIVE-CHANGED PAGE

| ACTIVE | | | CHANGED | | | | | ACTIVE | | | CHANGED | | | | |
|---|---|---|---|---|---|---|---|---|---|---|---|---|---|---|---|
| SECTION | PAGE | DATE | SECTION | PAGE REVISED | PAGE ADDED | PAGE DELETED | DATE | SECTION | PAGE | DATE | SECTION | PAGE REVISED | PAGE ADDED | PAGE DELETED | DATE |
| D | 1 | 11-15-61 | COMPLETE REVISION | | | | | | | | D | 31 | | | 6-1-62 |
| | 2 | 9-15-63 | | | | | | | | | | 32 | | | |
| | 2a | 9-15-63 | | | | 36 | 8-31-61 | | | | | 33 | | | |
| | 3 | 11-15-62 | | | | 37 | 8-31-61 | | | | | 34 | | | |
| | 4 | 10-22-62 | | | | 38 | 8-31-61 | | | | | 35 | | | |
| | 5 | 2-1-62 | | | | | | | | | D | 36 | | | 6-1-62 |
| | 6 | 11-15-61 | COMPLETE REVISION | | | | | | | | D | 2 | | | 7-13-62 |
| | 7 | 11-15-61 | | | 36 | | 11-15-61 | | | | | 4 | | | |
| | 8 | 7-13-62 | | | | | | | | | | 8 | | | |
| | 9 | 7-17-63 | D | 2 | | | 2-1-62 | | | | | 9 | | | |
| | 10 | 7-13-62 | | 4 | | | | | | | | 10 | | | |
| | 11 | 8-17-62 | | 5 | | | | | | | | 11 | | | |
| | 11a | 1-11-63 | | 8 | | | | | | | | 11a | | | |
| | 12 | 8-17-62 | | 9 | | | | | | | | 12 | | | |
| | 13 | 8-17-62 | | 10 | | | | | | | | 13 | | | |
| | 14 | 4-16-63 | | 11 | | | | | | | | 14 | | | |
| | 15 | 10-22-62 | | 12 | | | | | | | | 15 | | | |
| | 15a | 10-22-62 | | 13 | | | | | | | | 17a | | | |
| | 16 | 9-15-63 | | 14 | | | | | | | | 17b | | | |
| | 17 | 9-15-63 | | 15 | | | | | | | | 18 | | | |
| | 17a | 10-22-62 | | 16 | | | | | | | | 19 | | | |
| | 17b | 9-15-63 | | 17 | | | | | | | | 21 | | | |
| | 18 | 8-17-62 | | 18 | | | | | | | | 26 | | | |
| | 19 | 7-13-62 | | 23 | | | | | | | | 27 | | | |
| | 20 | 11-15-61 | | 27 | | | | | | | | 29 | | | |
| | 21 | 7-13-62 | | 28 | | | | | | | | 30 | | | |
| | 22 | 11-15-61 | | 29 | | | | | | | | 31 | | | |
| | 23 | 2-1-62 | | 30 | | | | | | | | 32 | | | |
| | 24 | 11-26-62 | | 31 | | | | | | | | 33 | | | |
| | 25 | 11-15-61 | | 32 | | | | | | | | 34 | | | |
| | 26 | 7-13-62 | | 33 | | | | | | | | 35 | | | |
| | 27 | 1-11-63 | | 34 | | | | | | | | 36 | | | |
| | 28 | 10-22-62 | | 35 | | | | | | | | 37 | | | |
| | 29 | 10-22-62 | | 36 | | | 2-1-62 | | | | D | 2 | | | 8-17-62 |
| | 30 | 6-1-62 | D | 2 | 11a | | 6-1-62 | | | | | 4 | | | |
| | 31 | 8-17-62 | | 4 | 15a | | | | | | | 11 | | | |
| | 32 | 10-22-62 | | 8 | 17a | | | | | | | 12 | | | |
| | 33 | 9-15-63 | | 9 | 17b | | | | | | | 13 | | | |
| | 34 | 1-11-63 | | 10 | 37 | | | | | | | 14 | | | |
| | 35 | 9-15-63 | | 11 | | | | | | | | 15 | | | |
| | 36 | 10-22-62 | | 12 | | | | | | | | 16 | | | |
| D | 37 | 9-15-63 | | 13 | | | | | | | | 17 | | | |
| | | | | 14 | | | | | | | | 17a | | | |
| | | | | 15 | | | | | | | | 18 | | | |
| | | | | 16 | | | | | | | | 19 | | | |
| | | | | 17 | | | | | | | | 27 | | | |
| | | | | 18 | | | | | | | | 29 | | | |
| | | | | 19 | | | | | | | | 31 | | | |
| | | | | 27 | | | | | | | | 35 | | | |
| | | | | 28 | | | | | | | D | 36 | | | 8-17-62 |
| | | | | 29 | | | | | | | | | | | |
| | | | D | 30 | | | 6-1-62 | | | | | | | | |

REVISED 9-15-63

U3 4288 1000 (WAS BAC 4131 C)

# ACTIVE-CHANGED PAGE

| ACTIVE | | | CHANGED | | | | | ACTIVE | | | CHANGED | | | | |
|---|---|---|---|---|---|---|---|---|---|---|---|---|---|---|---|
| SECTION | PAGE | DATE | SECTION | PAGE REVISED | PAGE ADDED | PAGE DELETED | DATE | SECTION | PAGE | DATE | SECTION | PAGE REVISED | PAGE ADDED | PAGE DELETED | DATE |
| | | | D | 2 | 2a | | 9-14-62 | | | | D | 2 | | | 4-15-63 |
| | | | | 11a | | | | | | | | 2a | | | |
| | | | | 14 | | | | | | | | 14 | | | |
| | | | | 16 | | | | | | | | 16 | | | |
| | | | | 17 | | | | | | | | 17 | | | |
| | | | | 17a | | | | | | | | 17b | | | |
| | | | | 17b | | | | | | | | 33 | | | |
| | | | | 29 | | | | | | | | 35 | | | |
| | | | D | 32 | | | 9-14-62 | | | | | 37 | | | |
| | | | D | 2 | | | 10-22-62 | | | | D | | | | 4-15-63 |
| | | | | 2a | | | | | | | | | | | |
| | | | | 4 | | | | | | | | | | | |
| | | | | 9 | | | | | | | | | | | |
| | | | | 15 | | | | | | | | | | | |
| | | | | 15a | | | | | | | | | | | |
| | | | | 16 | | | | | | | | | | | |
| | | | | 17 | | | | | | | | | | | |
| | | | | 17a | | | | | | | | | | | |
| | | | | 27 | | | | | | | | | | | |
| | | | | 28 | | | | | | | | | | | |
| | | | | 29 | | | | | | | | | | | |
| | | | | 32 | | | | | | | | | | | |
| | | | | 35 | | | | | | | | | | | |
| | | | | 36 | | | | | | | | | | | |
| | | | | 37 | | | | | | | | | | | |
| | | | D | | | | 10-22-62 | | | | | | | | |
| | | | D | 2 | | | 11-26-62 | | | | | | | | |
| | | | D | 2a | | | 11-26-62 | | | | | | | | |
| | | | D | 24 | | | 11-26-62 | | | | | | | | |
| | | | D | 2 | | | 1-11-63 | | | | | | | | |
| | | | | 2a | | | | | | | | | | | |
| | | | | 9 | | | | | | | | | | | |
| | | | | 11a | | | | | | | | | | | |
| | | | | 17b | | | | | | | | | | | |
| | | | | 27 | | | | | | | | | | | |
| | | | | 34 | | | | | | | | | | | |
| | | | D | 35 | | | 1-11-63 | | | | | | | | |

See revision description page, preceding Document Table of Contents

TABLE OF CONTENTS

SECTION "D"

ASSEMBLY AND CHECKOUT EQUIPMENT MAINTENANCE

A/F PLANT 77


| | PAGE NO. |
|---|---|
| TITLE PAGE | 1 |
| REVISION PAGE | 2 |
| TABLE OF CONTENTS | 3 |
| SCOPE | 4 |
| GROUND RULES | 4 |
| MASTER FLOW DIAGRAM | 6 |
| 1.0 ASSEMBLY & C/O EQUIPMENT MAINTENANCE | 7 |
| 1.1 PERFORM ON-SITE MAINTENANCE | 7 |
| 1.2 PERFORM MAINTENANCE SUPPORT | 22 |
| 1.3 PERFORM CERTIFICATION/CALIBRATION | 26 |
| REQUIRED DOCUMENTS | 27 |

SECTION "D"

ASSEMBLY AND CHECKOUT EQUIPMENT MAINTENANCE

A/F PLANT 77

SCOPE

This section presents the technical requirements to maintain the Factory Support Equipment (FSE), and Assembly and Checkout Equipment (ACO) and Facilities Equipment (FE) (ACO) in an operational status. The functions of this section will be effective and accomplished after initial installation and checkout of the above support equipment. Maintenance functions on SFC/OH equipment are not depicted or described in the functional block flows or technical functional analysis of their section. This category of equipment will be maintained in an operational status per established Boeing and Air Force operating procedures.

GROUND RULES

In addition to the General Ground Rules in Section "A", the following will apply specifically to this section:

1. All FSE and ACO which requires certification/calibration and/or functional testing during its initial installation in Section "C", will be revalidated and/or functionally tested at periodic intervals as called for in D2-12075 and D2-9918. This testing will be performed per appropriate test procedures.
2. Mechanical FSE and ACO requiring repair (which does not effect its configuration or function) will be repaired with existing SFC/OH equipment per D2-10885-3, Tool Repair and Maintenance Plan. (Unscheduled [illegible] Appendix III)

SECTION D (CONT)

3. Routine preventative maintenance functions will be accomplished per appropriate operating and maintenance procedures.

4. FSE and ACO modification work will be accomplished per engineering drawings. Facilities and support equipment established in Sections "B" and "C" will be used to support this function.

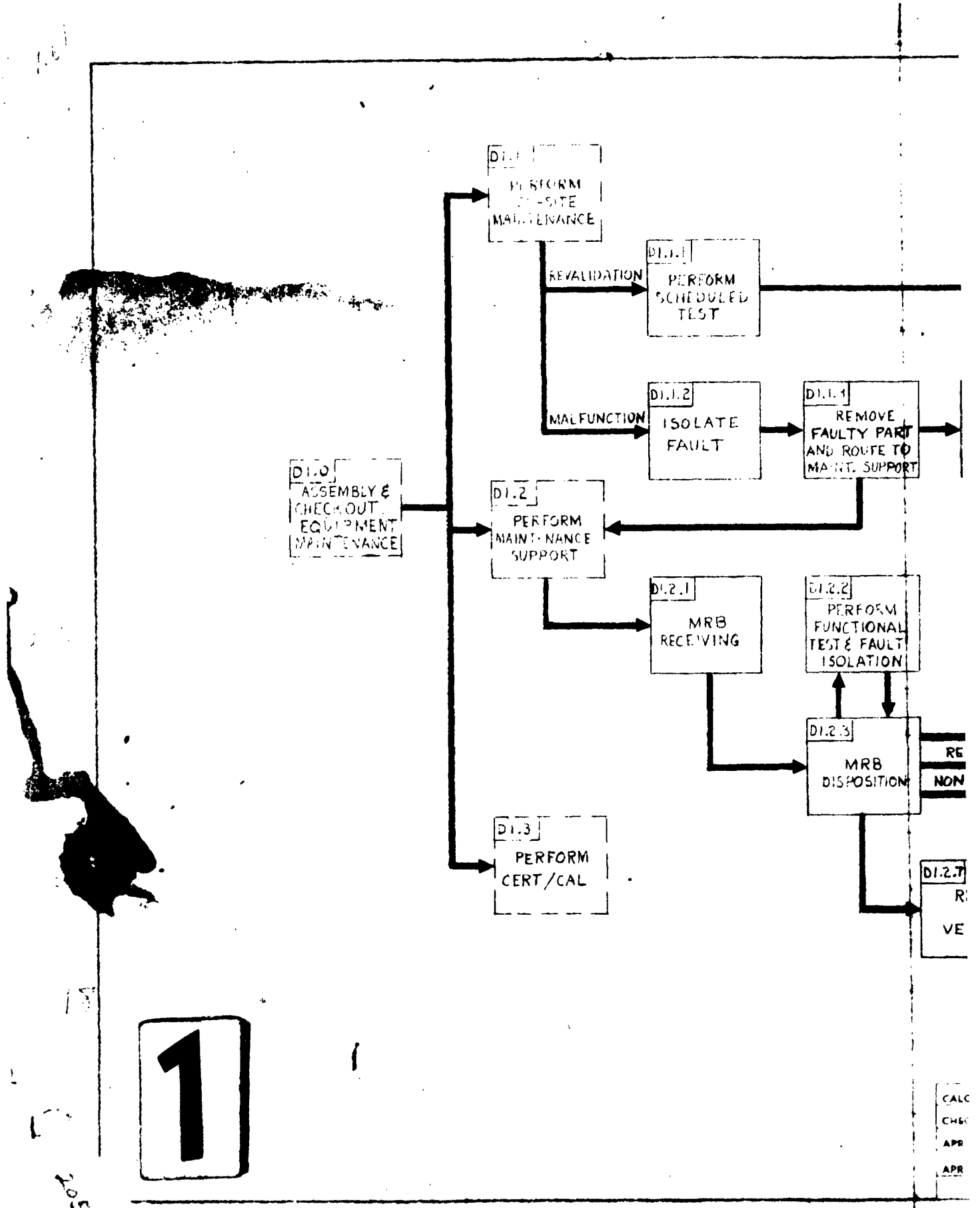
D1.0
ASSEMBLY & CHECKOUT EQUIPMENT MAINTENANCE
D1.1
PERFORM ON-SITE MAINTENANCE
REVALIDATION
D1.1.1
PERFORM SCHEDULED TEST
MALFUNCTION
D1.1.2
ISOLATE FAULT
D1.1.3
REMOVE FAULTY PART AND ROUTE TO MAINT. SUPPORT
D1.2
PERFORM MAINTENANCE SUPPORT
D1.2.1
MRB RECEIVING
D1.2.2
PERFORM FUNCTIONAL TEST & FAULT ISOLATION
D1.2.3
MRB DISPOSITION
D1.3
PERFORM CERT/CAL
1

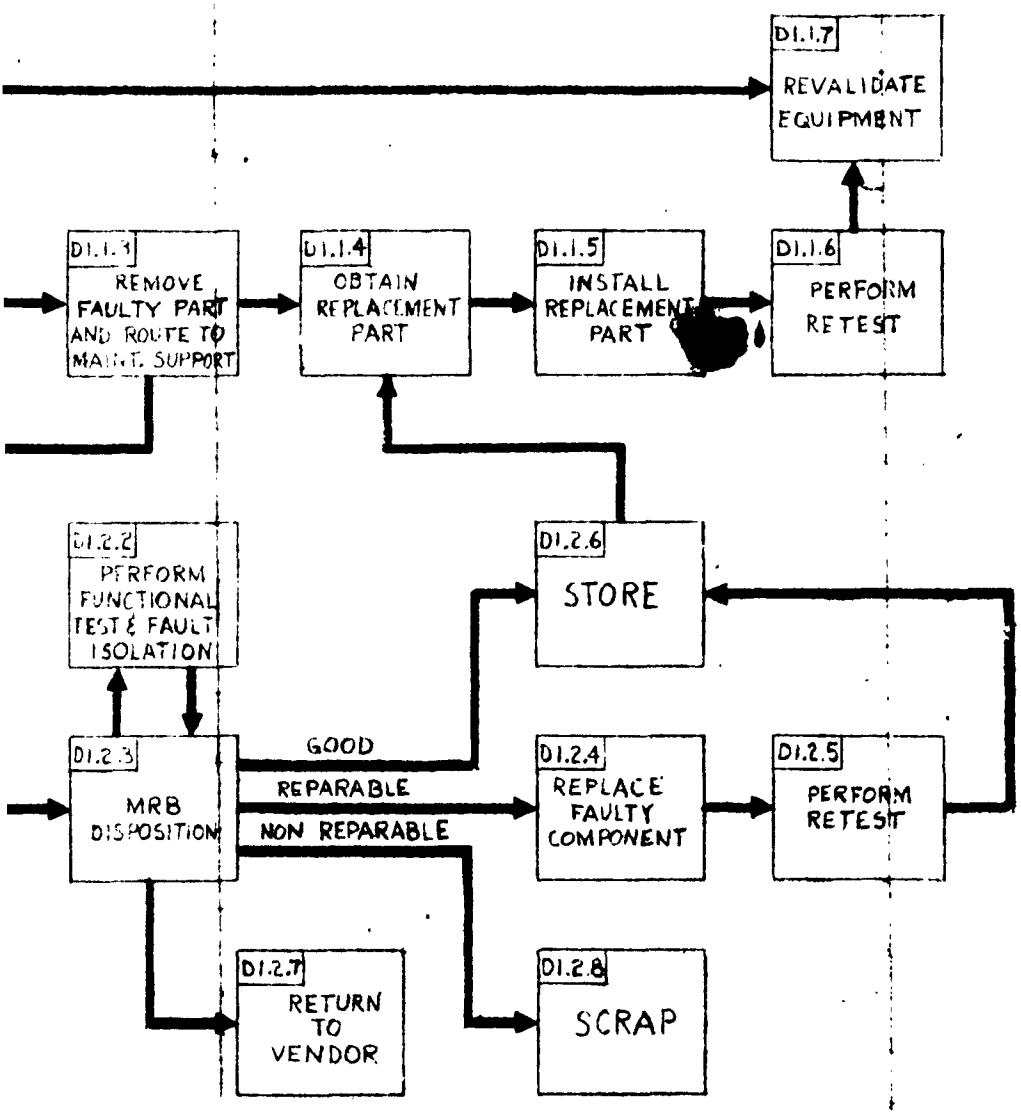


R

R

2

| | | | | | | |
|---|---|---|---|---|---|---|
| CALC | 6-1-61 | REVISED | DATE | D1.0 | OPERATION MAINTENANCE REQUIRMENTS, PLANT 77 | SECT. D |
| CHECK | | | 8-31-61 | | | D2-11162 |
| APR | | | 11-15-61 | | | |
| APR | | | | | BOEING AIRPLANE COMPANY SEATTLE 24, WASHINGTON | PAGE |

U3 4076 7000 (WAS BAC 1660-R2)

| ASSEMBLY OR CHECKOUT FUNCTION AND TECHNICAL REQUIREMENTS | RECOMMENDED EQUIPMENT OR DOCUMENT |
|---|---|
| 1.0 ASSEMBLY AND C/O EQUIPMENT MAINTENANCE<br>This operation will consist of all functions necessary to maintain the missile A & C/O equipment in an operational status. It is broken down into three major sub-functions:<br>(a) Perform on-site maintenance (consists of functions necessary to perform scheduled and unshheduled tests and/or repair on A & C/O equipment).<br>(b) Perform Maintenance Support (consists of functions required to support (a) above in repair of malfunctioned equipment).<br>(c) Perform Cert/Cal. (Consists of functions required to certify and revalidate A & C/O equipment to support (a) and (b) above). | |
| .1 PERFORM ON-SITE MAINTENANCE<br>This function consists of performing the operations required to functionally test and maintain the missile assembly and check-out equipment along with its support equipment. The missile assembly and checkout equipment required to support the missile assembly and checkout equipment is divided into the following three categories:<br>(a) The electronic equipment used to test the missile and the support electronic test equipment which requires both maintenance and periodic revalidation.<br>(b) The mechanical equipment used to assemble and checkout the missile which requires maintenance and periodic revalidation.<br>(c) The mechanical and electronic equipment which requires maintenance but does not require periodic revalidation. | |

| ASSEMBLY OR CHECKOUT FUNCTION AND TECHNICAL REQUIREMENTS | RECOMMENDED EQUIPMENT OR DOCUMENT |
|---|---|
| 1.1 A. The following electronic equipment is used to assemble and checkout the missile or test equipment and will require periodic revalidation and/or functional checkout as called for in documents D2-9918 and D2-12075. Calibration/certification, functional test procedures, operation and maintenance procedures used for activation of Plant 77, are required for equipment revalidation and maintenance. For standard off-the-shelf test equipment, functional test will be in accordance with applicable certification procedures D2-5378, Maintenance will be performed per manufacturer's manuals. | D2-9918 Calibration Requirements Summary |
| 1. Test Set, Ordnance Electrical (FSE 13) | D2-12206 FTP<br>D2-12205 O&M |
| 2. Ammeter, 500 amps (ACO 347) | D2-5378 and Mfr's Manual |
| 3. Test Group, G&C, C-89 (ACO 0622)<br>NOTE: A requirement exists to check the drawers of the C89. | D2-11284 C/C<br>D2-11290 FTP<br>EM-2356 O&M<br>Cable Assy C90 & C91 (FSE 7736)<br>Test Group, Ground Electronic System Tes C90 (ACO 0623)<br>Kit, Module Connection Alignment (ACO 0583)<br>ACO 10715<br>Test Set, C91 (ACO 0624) |
| 4. Test Group, Ground Electronic System, (C90) (ACO 0623)<br>NOTE: A requirement exists to check the drawers of the C90. | D2-11292 FTP<br>EM-2357 O&M<br>Kit, Module Connection Alignment (ACO 0583)<br>ACO 10716 |
| 5. Test Set, Programming, C-91 (ACO 0624)<br>NOTE: A requirement exists to check the drawers of the C-91. | D2-11294 FTP<br>EM-2358 O&M<br>Cable Assy, C90-C91 (FSE 7736)<br>Kit, Module Connection Alignment (ACO 0583)<br>(ACO 0623), Ground<br>(ACO 0624) System<br>(ACO 10717 ) |

FUNCTION D1.1

| ASSEMBLY OR CHECKOUT FUNCTION AND TECHNICAL REQUIREMENTS | RECOMMENDED EQUIPMENT OR DOCUMENT |
|---|---|
| 1.1 A. 6. Power Supply, DC Portable, C-95 (ACO 0667) | D2-11299 FTP<br>A/N (EM-2386) O&M |
| 7. Tape Perforator and Verifier (ACO 268) | Manufacturer's Manual |
| 8. Test Set Assy, Ordnance Circuit (FSE 7679) | D2-12054 FTP<br>Mfr's Manual O&M<br>(ACO 929) Test Set Power Supply |
| 9. Test Set, Cooler, Liquid, Guidance Section (ACO 3035) | D2-12647 FTP<br>Mfr's Manual O&M<br>D2-10752 FTP |
| 10. Liquid Cooling Equipment, Ground Guidance and Control (ACO 9278) | D2-10752 FTP<br>D2-10824-104 O&M<br>Test Set (ACO 3035) |
| 11. Cable Tester (ACO 402) | Mfr's Manual |
| 12. Multimeter (ACO 4001) | Mfr's Manual |
| 13. Oscilloscope (ACO 4004) | Mfr's Manual |
| 14. Load Banks (ACO 388) | Mfr's Manual |
| 15. Test Set, Multipurpose Portable Radio (ACO 324) | Mfr's Manual |
| 16. Power Supply (ACO 376) | Mfr's Manual |
| 17. Generator, Signal, Frequency Modulation, (ACO 325) | Mfr's Manual |
| 18. Power Supply, (ACO 345) | Mfr's Manual |
| 19. Voltmeter, Differential AC-DC (ACO 422) | Mfr's Manual |
| 20. Load, Dummy (ACO 334) | Mfr's Manual |

| ASSEMBLY OR CHECKOUT FUNCTION AND TECHNICAL REQUIREMENTS | RECOMMENDED EQUIPMENT OR DOCUMENT | |
|---|---|---|
| 1.1 A. (CONT) | | |
| 21. Generator, Video Sweep to 20 Megacycles (ACO 326) | Mfr's Manual | R |
| 22. Monitor, Radio Station, Frequency Modulation (ACO 332) | Mfr's Manual | R |
| 23. Megger, Ground (ACO 365) | Mfr's Manual | R |
| 24. Wattmeter, Radio Frequency (ACO 331) | Mfr's Manual | R |
| 25. DC Power Supply (ACO 463 ) | Mfr's Manual | R |
| 26. Vacuum Tube Tester, Mutual Conductance Type (ACO 327) | Mfr's Manual | R |
| 27. Voltmeter Vacuum Tube (ACO 337) | Mfr's Manual | R |
| 28. Megohmmeter, (ACO 362) | Mfr's Manual | R |
| 29. Resistance, Box, Decade (ACO 0593) | Mfr's Manual | R |
| 30. Oscilloscope, Plug-In-Unit (ACO 4172) | Mfr's Manual | R |
| 31. Volt Box, AC Power Supply (ACO 391) | Mfr's Manual | R |
| 32. Meter, Installation, Flow Rate Indicating (ACO 4190) | Mfr's Manual | R |
| 33. Junction Box, Test MAB (FSE 7721) | D2-10125 25-29338 FTP | |
| 34. Power Supply (ACO 393) | Mfr's Manual | R |
| 35. Ohmmeter (ACO 4381) | Mfr's Manual | R |

FUNCTION D1.1

REVISED 7-13-62

| ASSEMBLY OR CHECKOUT FUNCTION AND TECHNICAL REQUIREMENTS | RECOMMENDED EQUIPMENT OR DOCUMENT |
|---|---|
| 1.1 A. (continued) | |
| 36. Adapter Cables, Test Set - Raceway Cables (FSE 7715) | D2-10976<br>D2-10977 |
| 37. Power Supply Group MAB (FSE 7717) | D2-7828 FTP<br>Mfr's Manual O&M |
| 38. Dummy Load, Re-Entry Vehicle (FSE 7722) | D2-10122, Vol.IV FTP<br>29-26786 M |
| 39. Console, Missile Checkout (FSE 7723) | D2-10123, Vol. V FTP<br>D2-12401 O&M |
| NOTE: A requirement exists to test drawers of this console. | Card Extender (ACO 285)<br>Test Fixture, Drawer Tester, Missile checkout Console (FSE 7781) |
| 40. Test Set, NCU Zero Alignment, MAB (FSE 7724) | D2-10096 Vol. IV FTP<br>D2-12977 O&M |
| 41. Power Supply Group, G&C Test, CPA (FSE 7728) | D2-7828 FTP<br>Mfr's Manual O&M |
| 42. Power Supply Group, NCU Test, CPA (FSE 7729) | D2-7828 FTP<br>Mfr's Manual O&M |
| 43. Box, Test, Ordnance Cable (FSE 7740) | 29-21442 FTP |
| 44. Test Set-Console, Missile Checkout (FSE 7675) | D2-12606 Vol.IV FTP<br>D2-12608 O&M |
| 45. Tester, Leakage (FSE 7) (Aerojet) | D2-12195 O&M<br>D2-12196 FTP |
| 46. Installation Kit, Linear Explosive (FSE 7648) | D2-11004 O&M |
| 47. Test Fixture, Drawer Tester, Missile Checkout Console (FSE 7781) | |
| 48. Test Set and Adapter Cables-Raceway Cable-MAB (FSE 7696) | D2-14116 O&M<br>D2-14115 Manual FTP |
| 49. Ammeter, AC/DC (ACO 4461) | D2-5378 and<br>Mfr's Manual |
| 50. Cable Adapter, Error Indication Test (ACO 731) | D2-5370 and<br>Mfr's Manual |

FUNCTION D1.1

| ASSEMBLY OR CHECKOUT FUNCTION AND TECHNICAL REQUIREMENTS | RECOMMENDED EQUIPMENT OR DOCUMENT |
|---|---|
| 1.1 A. (Continued) | |
| 51. Cable Adapter, NO-GO & Gross Temperature G&C Ground Cooling (ACO 732) | Mfr's Manual |
| 52. Bimetal Thermometer (ACO 749) | Mfr's Manual |
| 53. Pressure Sensor (ACO 753) | Mfr's Manual |
| 54. Power Supply Group, NCU Linkage Adjustment CPA (FSE 7744) | Mfr's Manual |
| 55. Recording Station (ACO 273) | Mfr's Manual |
| 56. Tester, Transistor (ACO 323) | Mfr's Manual |
| 57. Power Supply (ACO 4127) | Mfr's Manual |
| 58. Recorder (ACO 10701) | Mfr's Manual |
| 59. Counter, Beckman Model 7360 (ACO ) | Mfr's Manual |
| 60. Recorder Temperature - Portable (ACO 532) | Mfr's Manual R |

FUNCTION D1.1

| ASSEMBLY OR CHECKOUT FUNCTION AND TECHNICAL REQUIREMENTS | RECOMMENDED EQUIPMENT OR DOCUMENT | |
|---|---|---|
| 1.1 PERFORM ON-SITE MAINTENANCE (CONT) | | |
| B. The following mechanical equipment is used to assemble and checkout the missile and will require periodic revalidation or functional checkout as called for in documents D2-9918 and D2-12075 Calibration/certification, functional test, and operation and maintenance procedures used for activation of Plant 77 are required for equipment revalidation and maintenance. For standard off-the-shelf test equipment, functional test will be in accordance with applicable certification procedures. Maintenance will be in accordance with the applicable manufacturer's manuals. | | |
| 1. Indicator Nozzle Deflection and Torque Stage II (FSE 15) Aerojet | D2-12209<br>D2-12208 | FTP<br>O&M |
| 2. Tester, Nozzle Deflection and Torque Stage III (FSE 202) (Hercules) | ~~D2-[illegible]~~<br>D2-11772 | ~~FTP~~<br>O&M |
| 3. Gage, NCU Alignment, Stage I (FSE 10151) | D2-11316<br>~~A/N ( )~~ | FTP<br>~~O&M~~ |
| 4. ~~Check Plate, NCU Stage I (FSE 10152)~~ | ~~D2-11315~~<br>~~A/N ( )~~ | ~~FTP~~<br>~~O&M~~ |
| 5. Gage, Verification, NCU Stage I (FSE 10153) | D2-11316<br>~~A/N ( )~~ | FTP<br>~~O&M~~ |
| 6. ~~Check Plate, Verification, NCU Stage I (FSE 10154)~~ | ~~D2-11315~~<br>~~A/N ( )~~ | ~~FTP~~<br>~~O&M~~ |
| 7. Gage, NCU Alignment, Stage II (FSE 10155) | D2-11317<br>~~A/N ( )~~ | FTP<br>~~O&M~~ |
| 8. ~~Check Plate, NCU Stage II (FSE 10156)~~ | ~~D2-11315~~<br>~~A/N ( )~~ | ~~FTP~~<br>~~O&M~~ |

FUNCTION D1.1

REVISED 8-17-62

| ASSEMBLY OR CHECKOUT FUNCTION AND TECHNICAL REQUIREMENTS | RECOMMENDED EQUIPMENT OR DOCUMENT | | |
|---|---|---|---|
| 1.1 PERFORM ON-SITE MAINTENANCE (CONT) | | | |
| B. 9. Gage Verification, NCU Stage II (FSE 10157) | D2-11317 | FTP | |
| 10. ~~Check Plate, Verification, NCU Stage II (FSE 10158)~~ | ~~D2-11315~~ | ~~FTP~~ | R |
| 11. Gage, NCU Alignment, Stage III (FSE 10159) | D2-11318 | FTP | |
| 12. ~~Check Plate, NCU Alignment, Stage III (FSE 10160)~~ | ~~D2-11315~~ | ~~FTP~~ | R |
| 13. Gage, Verification, NCU Alignment, Stage III (FSE 10161) | D2-11315 | FTP | |
| 14. ~~Check Plate, Verification NCU Stage III (FSE 10162)~~ | ~~D2-11315~~ | ~~FTP~~ | R |
| 15. Valve (ACO 719) | Mfr's Manual | | |
| 16. Tester, Nozzle Deflection and Torque, Stage I (FSE 123) (Thiokol) | D2-12365 | FTP & O&M | |
| 17. Air Conditioner (MGE 4115) | Mfr's Manual | | |
| 18. Purging & Drying Kit - G&C Section (ACO 466) | D2-13764 | O&M | |
| 19. Thermometer (ACO 3076) | Mfr's Manual | | |
| 20. Hoist, Portable (ACO 405) | Mfr's Manual | | |
| 21. Sling-Standard Factory, Four Drop (ACO 454 ) | | | |
| 22. NCU (H9) Sling (FSE 610) | EM 2084 | O&M | |
| 23. Flowmeter (ACO 752) | Mfr's Manual | | |
| 24. Flowmeter (ACO 754) | Mfr's Manual | | |

| ASSEMBLY OR CHECKOUT FUNCTION AND TECHNICAL REQUIREMENTS | RECOMMENDED EQUIPMENT OR DOCUMENT | |
|---|---|---|
| 1.1 PERFORM ON-SITE MAINTENANCE (CONT) | | |
| B. 25. Sling-Adapter Ring, Missile Base (FSE 7631) | D2-11014<br>D2-11015 | O&M<br>FTP |
| 26. Sling-Horizontal Restraint Ring, Engine Stage I, II, & III (FSE 7632) | D2-11012<br>D2-11013 | O&M<br>FTP |
| 27. Bridle, Carriage, 1st Stage (Rocket Motor Truck) (FSE 7745) | D2-10940<br>D2-10941 | O&M<br>FTP |
| 28. Sling and Harness G&C Section (FSE 7634) | D2-10990<br>D2-10991 | O&M<br>FTP |
| 29. Sling and Harness - Engine Skirt (FSE 7636) | D2-10974<br>D2-10975 | O&M<br>FTP |
| 30. Harness - R. H. Panel, Missile Interstage I-II (FSE 7641) | D2-10949<br>D2-10950 | O&M<br>FTP |
| 31. Harness - L. H. Panel, Missile Interstage I-II (FSE 7642) | D2-10994<br>D2-10995 | O&M<br>FTP |
| 32. Harness - R. H. Panel, Missile Interstage II-III (FSE 7730) | D2-11073<br>D2-11074 | FTP<br>O&M |
| 33. Harness - L. H. Panel, Missile Interstage II-III (FSE 7731) | D2-11071<br>D2-11072 | FTP<br>O&M |
| 34. Truck, Hand, Autonavigator (ACO 0565) | D2-[illegible]<br>A/N ( ) | FTP<br>O&M |
| 35. Jack Set, Translating (ACO 4175) | 25-28581 | O&M |
| 36. ~~Mixture, Pressure-Missile Assembly (FSE 7620)~~ | ~~D2-10961~~<br>~~D2-10962~~ | ~~O&M~~<br>~~FTP~~ |
| 37. Rails - Missile Joining (FSE 7628) | D2-10901<br>D2-10902 | O&M<br>FTP |
| 38. Clamp Assy. - Missile Transfer (FSE 7686) | 25-27632<br>A/N- | O&M<br>FTP |
| 39. Rails, Storage - Engine and Missile (FSE 7629) | D2-10907<br>D2-10908 | O&M<br>FTP |
| 40. ~~Winch, Portable Rocket Motor Transfer (FSE 7653)~~ | ~~D2-11027~~<br>~~D2-11028~~ | ~~O&M~~<br>~~FTP~~ |

FUNCTION D1.1

| | | ASSEMBLY OR CHECKOUT FUNCTION AND TECHNICAL REQUIREMENTS | RECOMMENDED EQUIPMENT OR DOCUMENT | |
|---|---|---|---|---|
| 1.1 | B. 41. | Rail Assembly -Bridge - Engine Transfer (FSE 7756) | 25-17299 | O&M |
| | 42. | Recorder, Temperature (Facility) | Mfr's Manual | |
| | 43. | Recorder, Humidity (Facility) | Mfr's Manual | |
| | 44. | Platform, Portable-Highway Transporter (FSE 7666) | D2-11050<br>D2-11051 | FTP<br>O&M |
| | 45. | Rails - Storage, Missile - GTM 77 (FSE 7685) | D2-11100<br>D2-10907 | FTP<br>O&M |
| | 46. | Bridle, Rocket Motor, Stage III (FSE 7690) | D2-10934<br>D2-10939 | FTP<br>O&M |
| | 47. | Pulley Brakcet Assembly, Transporter, Stage II & III (FSE 7760) | D2-7429-1 | (M) |
| | 48. | Bridle, Rocket Motor, Stage I (FSE 7689) | D2-10926<br>D2-10933 | FTP<br>O&M |
| | 49. | Alignment Set, Missile Transfer (ACO 4535) | 25-27486 | FTP |
| | 50. | Cover, Hoisting Sling H6A (ACO 0608) | EM2084 | O&M |
| | 51. | Gage, Engine Nozzle Alignment, Stage I (FSE 10163) | D2-11316 | FTP |
| | 52. | ~~Checkplate, Engine Nozzle Alignment, Stage I (FSE 1-164)~~ | ~~D2-11315~~ | ~~FTP~~ |
| | 53. | Gage, Engine Nozzle Alignment, Stage II (FSE 10165) | D2-11316 | FTP |

| ASSEMBLY OR CHECKOUT FUNCTION AND TECHNICAL REQUIREMENTS | RECOMMENDED EQUIPMENT OR DOCUMENT |
|---|---|
| 1.1 B. 54. Gage, Engine Nozzle Alignment, Stage II (FSE 10167) | D2-11316 FTP |
| 55. Sling, G&C Section Shipping Container Cover (ACO 468) | |
| C. The following mechanical and electronic equipment does not require periodic revalidation or functional tests. The following items of equipment will receive maintenance as required. | |
| 1. Spreader Kit, Nozzle - Stage II (FSE 17) | |
| 2. Spreader Assy., Stage I Nozzles (FSE 114) | D2-12364 |
| 3. NCU (H2) Trailer, Stage I (FSE 614) | EM-2084 |
| 4. NCU (H8) Trailer, Stage II (FSE 615) | EM 2084 |
| 5. NCU (H13) Trailer, Stage III (FSE 620) | EM-2084 |
| 6. Sampling Bomb (ACO 313) | |

| ASSEMBLY OR CHECKOUT FUNCTION AND TECHNICAL REQUIREMENTS | RECOMMENDED EQUIPMENT OR DOCUMENT |
|---|---|
| 1.1 PERFORM ON-SITE MAINTENANCE (CONT) | |
| C. 7. Hoist, Lever, (Come-Along) (ACO 450) | Mfr's Manual |
| 8. Puller, Printed Circuit Remover (ACO 3009) | |
| 9. Lead, Electrical Ground (ACO 352) | |
| 10. Reservoir (ACO 769) | Mfr's Manual |
| 11. Work Table, Electronic Test (ACO 456) | Mfr's Manual |
| 12. Jack, Leveling Support (ACO 415) | Mfr's Manual |
| 13. Positioning Set, Carriage, Rocket Motor (FSE 7691) | D2-9555 25-32273 |
| 14. Fixture, Test - Ordnance Device (FSE 7678) | |
| 15. Adapter, Joining-Missile Interstage I-II (FSE 7613) | D2-10929 |
| 16. Adapter Flow (G&C) Umbilical (ACO 200) | |
| 17. Fixture, Support Umbilical Cabling, MAB (FSE 7619) | D2-10905 |
| 18. Simulators, Airborne Components, Missile Test (FSE 7695) | D2-13848 |
| 19. Scaffolding - Missile Access (FSE 7630) | D2-10903 |
| 20. Adapter, Joining NCU Stage I (FSE 7701) | D2-10945 D2-10960 |
| 21. Adapter, Joining NCU Stage II (FSE 7702) | D2-10937 D2-10964 |
| 22. Adapter, Joining NCU Stage III (FSE 7703) | D2-10947 |
| 23, Dolly, Positioning - G&C Section (FSE 7707) | D2-10935 |
| 24. Dolly, Positioning - Final Assembly (FSE 7708) | D2-10927 |
| 25. Joining Dolly - Skirt to Engine (FSE 7709) | D2-10931 |
| 26. Cable Assembly NCU Test (FSE 7719) | |
| 27. Cable Assembly Equip. Interconnecting MAB (FSE 7718) | |
| 28. Cable Assembly Umbilical MAB (FSE 7720) | |

FUNCTION D1.1

| ASSEMBLY OR CHECKOUT FUNCTION AND TECHNICAL REQUIREMENTS | RECOMMENDED EQUIPMENT OR DOCUMENT |
|---|---|
| 1.1 C. (CONT) | |
| 29. Cable Assembly Interconnecting G&C Test Position (FSE 7726) | |
| 30. Cable Assembly Interconnecting NCU Test Position (FSE 7727) | |
| 31. Probe, Detector Attenuator (ACO 335) | Mfr's Manual |
| 32. Camera and Tri-pod, Still Picture (ACO 448) | Mfr's Manual |
| 33. Dolly, Joining-Amplifier NCU Stage III (FSE 7684) | D2-10922 |
| 34. Microphone (ACO 328) | Mfr's Manual |
| 35. Probe-High Voltage DC (ACO 336) | Mfr's Manual |
| 36. T. V. Monitor, Closed Circuit (ACO 350) | Mfr's Manual |
| 37. Kit, Installation and Removal, Ordnance Devices, Stage II (FSE 31) | |
| 38. Plug,Kit, Nozzle, Stage II (FSE 16) | |
| 39. Kit, Pyrogen Installation & Removal Stage I (FSE 110) | D2-12363 |
| 40. Kit, Installation & Removal, Ordnance Device (Stage III) (FSE 201) | D2-11762 |
| 41. Kit, Ablative Material Repair (FSE 7665) | D2-11087 |
| 42. Control, Winch, MAB & StorageBunker (FSE 7688) | D2-10925 |
| 43. Shelter Missile and Motor Transfer-Environmental -MAB (FSE 7682) | D2-10993 |
| 44. Test Fixture, Power Supply, MAB & CPA (FSE 7780) | Mfr's Manual |
| 45. Portable Flood Lamp (ACO 4425) | |
| 46. Shelter Missile and Motor Transfer-Environmental-Missile/Motor Storage Bldg. (FSE 7687) | D2-10997 |
| 47. ~~Nozzle Positioning Tool Assy (FSE )~~ | |
| 48. Turnbuckle, YZ Cable (FSE ) | D2-13510 O&M |
| 49. Plug Kit, Engine, Stage I (FSE 126) | FUNCTION D1.1 |

REVISED 4-15-63

| ASSEMBLY OR CHECKOUT FUNCTION AND TECHNICAL REQUIREMENTS | RECOMMENDED EQUIPMENT OR DOCUMENT | |
|---|---|---|
| 1.1 C. (Continued) | | |
| 50. [illegible] | [illegible] | |
| 51. Microscope (ACO 315) | | R |
| 52. Alarm Set Charging Cable (FSE 7750) | | R |
| 53. ~~Transfer Kit, Missile - T-E/Rails (FSE 7697)~~ | ~~D2-10965~~ ~~D2-10966~~ ~~FTP~~ ~~O&M~~ | R |
| 54. Cable Assemblies, Power, C91-C90 Test Position (FSE 7736) | | |
| 55. Junction Box, Auxiliary, MAB (FSE 7739) | | |
| 56. Hose Assembly, Cooling G&C Section (FSE 7741) | | |
| 57. Cable Assemblies, Interconnecting, NCU Linkage Adjustment, CPA (FSE 7742) | | |
| 58. Distribution Box, NCU Linkage Adjustment, CPA (FSE 7743) | | |
| 59. Set, Fault Isolation Tooling (FSE 7746) | D2-10944 O&M | R |
| 60. Test Adapter Cable, Stage I, NCU, Model P70B (FSE 7748) | | |
| 61. Cable, Rocket Motor Bonding (ACO 253) | | |
| 62. Set, Connector (ACO 267) | | |
| 63. Monometer, Inclined (ACO 308) | | |
| 64. Cable Assembly, Power Electrical, Portable Flood Lamps (ACO 449) | | |
| 65. Container, Raceway Cables, Stage III (ACO 457) | | |
| 66. Container, Raceway Cables, Stage II (ACO 458) | | |
| 67. Container, Raceway Cables, Stage I (ACO 459) | | |
| 68. Kit, Module Connection Alignment (ACO 0583) | | |

| ASSEMBLY OR CHECKOUT FUNCTION AND TECHNICAL REQUIREMENTS | RECOMMENDED EQUIPMENT OR DOCUMENT |
|---|---|
| 1.1 C. (Cont) | |
| 69. G&C End Cover (FSE 7600) | D2-11081 (O&M) |
| 70. Stop Watch (ACO 3059) | |
| 71 Adapter, Spanner Wrench (ACO 3119) | |
| 72. Wrench, Safing Pin Installation and Removal (ACO 4047) | |
| 73. Test Tool - Explosive Set Circuit Test Set (ACO 935) | Mfr's Manual |
| 74. Wrench Portable Electric (ACO 4524) | |
| 75. Self Test Unit (C91) (ACO ) | |
| 76. Decade Resistor (ACO 4368) | Mfr's Manual R |
| 77. Decade Resistor (ACO 907) | Mfr's Manual |
| 78. Stop, Railcar Wheel (ACO 4525) | |
| 79. Restraint Device Rocket Motor Stage I (FSE 7789) | |
| 80. Restraint Device Rocket Motor Stage II (FSE 7790) | |
| 81. Restraint Device Rocket Motor Stage III (FSE 7791) | |
| 82. Chart, EIA, Resolution (Initial Retma Linearity Chart) (ACO 330) | |
| 83. Shelving Storage (ACO 462) | |

FUNCTION D1.1

| ASSEMBLY OR CHECKOUT FUNCTION AND TECHNICAL REQUIREMENTS | RECOMMENDED EQUIPMENT OR DOCUMENT |
|---|---|
| D1.1 D. (Cont'd) | |
| The following mechanical equipment requires scheduled maintenance. | |
| 1. SSCBM (MGE 4095) | D25-29553-27 R |
| 2. Trailer, Ballistic Missile (MGE 4129) | Mfr's Manual R |
| 3. Tractor (MGE 4130) | Mfr's Manual |
| 4. Truck, Motor Miscellaneous Delivery (ACO 452) | Mfr's Manual |
| 5. Truck Lift-Jack (ACO 461) | Mfr's Manual |
| 6. Truck Lift-Fork (ACO 453) | Mfr's Manual |
| 7. Semi-Trailer, Rocket Motor (FSE 101) | D2-12976 Manual R |
| 8. Semi-Trailer, Transporter-Erector (MGE 4059) | Mfr's Manual |
| 9. Truck Tractor, Transporter-Erector (MGE 4075) | Mfr's Manual |
| 10. Truck, Transporter-Erector, Support (MGE 4119) | Mfr's Manual |

| ASSEMBLY OR CHECKOUT FUNCTION AND TECHNICAL REQUIREMENTS | RECOMMENDED EQUIPMENT OR DOCUMENT |
|---|---|
| 1.1.1 PERFORM SCHEDULED TEST<br><br>Perform the operations necessary to revalidate the missile C/O equipment. Appropriate functional test procedures and test equipment will be required. These are listed and described in section C of this document. The frequency of revalidation will be per Boeing documents D2-9918 or D2-12075. The commercial standards will be certified by the Cert/Cal. Lab., and the functional equipment that does not contain commercial standards will be revalidated by Manufacturing and Quality Control personnel. | |
| .2 ISOLATE FAULT<br><br>Perform the initial operations required to isolate a fault in the missile assembly and C/O test equipment. Authorized personnel will initiate the appropriate forms required for MRB action. | |
| 1.1.3 REMOVE FAULTY PART AND ROUTE TO MAINTENANCE SUPPORT<br><br>This function consists of the removal and routing of missile C/O components requiring scheduled recertification and calibration or repair as authorized. Manufacturing personnel will initiate a removal order and obtain Quality Control approval. Protective covers or containers, as required, will be provided during transfer. | |

FUNCTION D.1.1.1

| ASSEMBLY OR CHECKOUT FUNCTION AND TECHNICAL REQUIREMENTS | RECOMMENDED EQUIPMENT OR DOCUMENT |
|---|---|
| 1.1.4 OBTAIN REPLACEMENT PART<br><br>This function consists of obtaining replacement part or assembly required to correct a malfunction or to revalidate equipment. The procurement of the part or assembly will be accomplished by established Boeing procedures. | |
| 1.1.5 INSTALL REPLACEMENT PART<br><br>This function consists of the necessary procedures and operations required to replace a part or assembly which replaces one that has been removed due to a malfunction or revalidation requirement.<br><br>Component or assembly installations will be in accordance with the appropriate detail or assembly drawings. | Appropriate Equipment Detail or Assembly Drawings |
| 1.1.6 PERFORM RE-TEST<br><br>This function consists of the operations required to perform a retest of the missile checkout equipment after installation of a component. Appropriate functional test documentation and test equipment required are defined in function C6 of this document. | Equipment and Procedures (See Function C6.0) |

| ASSEMBLY OR CHECKOUT FUNCTION AND TECHNICAL REQUIREMENTS | RECOMMENDED EQUIPMENT OR DOCUMENT |
|---|---|
| 1.1.7 RE-VALIDATE EQUIPMENT | |
| Operations are required to revalidate the missile checkout equipment periodically or after malfunction has been repaired. This function follows sub functions 1.1.1 and 1.1.6. | |
| Revalidations procedures are contained in D2-9918, Calibration Requirements Summary, AF Plant 77, and D2-12075, Calibration/Certification and Test Equipment index. | D2-9918<br>D2-12075 |

| ASSEMBLY OR CHECKOUT FUNCTION AND TECHNICAL REQUIREMENTS | RECOMMENDED EQUIPMENT OR DOCUMENT |
|---|---|
| 1.2 PERFORM MAINTENANCE SUPPORT<br>This function covers the disposition of all items of test equipment which have been rejected because of damage or have malfunctioned during their operational function.<br><br>Detailed support procedures for disposition of equipment is included in the appropriate sub-functions. Equipment required to support this function is listed and described in the appropriate function of Section C, which initially installs and qualifies the equipment in question. Maintenance of equipment being repaired or used to test equipment being repaired, will be according to instructions noted in function 1.1. | |
| 1.2.1 MRB RECEIVING<br>This function will consist of all operations necessary to receive and process rejected missile A & C/O and support equipment. | |
| 1.2.2 PERFORM FUNCTIONAL TEST (AND FAULT ISOLATION)<br>Perform all operations necessary to isolate the malfunction to a faulty card or component. Detail functional test documents are required. | Appropriate Functional Test Procedures and Operation and Maintenance Manuals for MGE & FSE Equipment. |

| ASSEMBLY OR CHECKOUT FUNCTION AND TECHNICAL REQUIREMENTS | RECOMMENDED EQUIPMENT OR DOCUMENT |
|---|---|
| 1.2.3 MRB DISPOSITION<br>This function will consist of all operations required to determine disposition necessary for rejected equipment. This function will be per established Air Force and Boeing Quality Control procedures. Function D1.2.2 will support this function by performing tests and fault isolation as directed by the MRB. Equipment which is proven acceptable in this function will be routed directly to stores. (see function D1.2.6). Reparable equipment will be routed to function D1.2.4 for repair. Non-reparable equipment will be scrapped. (See function D1.2.8). Equipment under vendor warranty will be returned to the vendor for proper disposition. (See function D1.2.7.) Reliability personnel will analyze all failures which require reliability reporting and will initiate corrective action as required for reliability improvement. | |
| 1.2.4 REPLACE FAULTY COMPONENT<br>This function consists of replacing the faulty components within the equipment that has been received from MRB with repair instructions. This function will be performed on the portable equipment in the Maintenance Support Area, and on the permanently installed equipment at the installed location. The equipment required to perform this function will be standard hand tools as normally used by a technician qualified to make repairs. | |
| | FUNCTION D1.2.3 |

| ASSEMBLY OR CHECKOUT FUNCTION AND TECHNICAL REQUIREMENTS | RECOMMENDED EQUIPMENT OR DOCUMENT |
|---|---|
| 1.2.5 PERFORM RETEST<br><br>This function consists of performing functional tests on equipment after it has been repaired. The post-assembly test or portions thereof will be performed to revalidate the repaired component. Test equipment in function C-6 will be utilized for this function. Functional test procedures for the spare parts and subassemblies will be required.<br><br>NOTE: Should any equipment in the Missile Assembly building, which supports the Missile Functional Test (Function B12.0) receive maintenance or periodic revalidation, perform function C9.3.2 (Missile Test Position Integration Test) after completion of unit tests. | See Function C-6 for test equipment.<br><br>Functional Test procedures for Spares level part and subassemblies. |
| 1.2.6 STORE<br><br>This function will consist of all operations required to receive, process control records, store and issue subject equipment. These operations will be accomplished per established Boeing equipment storage and accountability procedures. | BIMM Manual D2-9914,(Field Production Control Manual) |
| 1.2.7 RETURN TO VENDOR<br><br>Equipment which has been rejected, and the cause has been determined as a manufacturer's defect, will be returned to the vendor for adjustment per the warranty on the equipment. This function consists of all packaging, shipping, and accountability control operations necessary to accomplish this. | |

| ASSEMBLY OR CHECKOUT FUNCTION AND TECHNICAL REQUIREMENTS | RECOMMENDED EQUIPMENT OR DOCUMENT |
|---|---|
| 1.2.8 SCRAP<br>This function consists of the preparation of scrap orders and the actual dispostion of the equipment to be scrapped. This function will be accomplished per existing Boeing procedures. | |

FUNCTION D1.2.8

| ASSEMBLY OR CHECKOUT FUNCTION AND TECHNICAL REQUIREMENTS | RECOMMENDED EQUIPMENT OR DOCUMENT |
|---|---|
| 1.3 PERFORM CERTIFICATION/CALIBRATION<br>This function covers the operations required to recertify and recalibrate the equipment, which due to its functions and limitations requires periodic certification. This will include torque wrenches, scopes, meggers, gauges, meters, etc.<br><br>The frequency of certification and calibration will be found in document D2-9918 and D2-12075. The operations required for removal transporting, storing, and reinstallation are contained in previous sub-functions in this section. | D2-9918 Calibration Requirements Summary, AF Plant 77 |

SECTION D - REQUIRED PROCEDURE DOCUMENTS

| Doc. No. | Title | Section |
|---|---|---|
| D2-[illegible] | Maintenance and Test Equipment Certification Report [illegible] | |
| D2-7429-1 | Maintenance Instructions for Minuteman Rocket Motor Handling & Transportation Equipment | |
| D2-7828 | Assembly Functional Test Procedures - Power Supply Group - Plant 77, MAB and CPA | |
| D2-9555 | Handbook of Operating Procedures-Engine Handling Harness and Horizontal Restraint and Bracket Assembly Sets | |
| D2-9914 | Field Production Control Manual | |
| D2-9918 | Calibration Equipments Summary A/F Plant 77 | |
| D2-10096 Vol. IV | Functional Acceptance, Test Set, N CU Zero Alignment | |
| D2-10122 Vol. IV | Functional Test Procedure-Re-Entry Vehicle Dummy Load | |
| D2-10123 Vol. V | Functional Test Procedures, Missile Checkout Console | |
| D2-10125 | Acceptance Functional Test Requirements and Procedure Main J-Box-MAB | |
| ~~D2-[illegible] Functional Acceptance Test Procedures - Cooler, Liquid, Guidance Section~~ | | R |
| D2-10752 | Functional Acceptance-G&C Ground Cooling System | |
| D2-10825-104 | Rack, Assembly-Guidance & Control Ground Cooling Operation, Service and Repair Instructions | |
| ~~D2-[illegible] Maintenance Instructions [illegible], Tractor and Ballistic Missile Trailer~~ | | |
| D2-10940 | Functional Acceptance-Bridle, Carriage, 1st Stage (Rocket Motor Truck) | |
| D2-10885-3 | Tool Repair and Maintenance Plan | |
| D2-10901 | Operation and Maintenance-Rails | |
| D2-10902 | Functional Acceptance-Rails, Missile Joining | |
| D2-11762 | Operation Instructions, Kit, Installation and Removal Ordnance Device (Stage III) | |

SECTION D - REQUIRED PROCEDURE DOCUMENTS

| Doc. No. | Title |
|---|---|
| D2-10903 | Operation and Maintenance - Scaffolding - Missile Access |
| D2-10905 | Operation and Maintenance-Fixture, Support Umbilical Cabling, MAB |
| D2-10907 | Operation and Maintenance-Rails, Storage, Engine and Missile |
| D2-10908 | Functional Acceptance - Rails, Storage-Engine and Missile |
| D2-10922 | Operation and Maintenance-Dolly, Joining Amplifier NCU, Stage III |
| D2-10925 | Operation and Maintenance-Control-Winch, MAB & Storage Bunker |
| D2-10926 | Functional Acceptance - Bridle Rocket Motor, Stage I |
| D2-10927 | Operation and Maintenance-Dolly, Positioning-Final Assembly |
| D2-10929 | Operation and Maintenance-Adapter, Joining-Interstage I-II |
| D2-10931 | Operation and Maintenance-Dolly, Joining-Skirt to Engine |
| D2-10933 | Operating and Maintenance-Bridle-Rocket Motor Stage I |
| D2-10934 | Functional Acceptance - Bridle Rocket Motor, Stage III |
| D2-10935 | Operation and Maintenance-Dolly, Positioning-G&C Section |
| D2-10937 | Operation and Maintenance - Adapter, Joining NCU Stage II |
| D2-10939 | Operating and Maintenance-Bridle - Rocket Motor, Stage III |
| D2-10945 | Operation and Maintenance-Adapter, Joining NCU Stage I |
| D2-10941 | Operation and Maintenance-Bridle, Carriage 1st Stage (Rocket Motor Truck) |
| D2-10944 | Operation and Maintenance Tooling Set Checking Fixture |

SECTION D - REQUIRED PROCEDURE DOCUMENTS (Continued)

| Doc. No. | Title |
|---|---|
| D2-10947 | Operation and Maintenance - Adapter, Joining NCU Stage III |
| D2-10949 | Operation and Maintenance - Harness - R. H. Panel Missile Interstage I-II |
| D2-10950 | Functional Acceptance - Harness - R. H. Panel, Missile Interstage I-II |
| D2-10960 | Operation and Maintenance - Adapter, Joining - NCU Stage I (Model B) |
| D2-10964 | Operation and Maintenance, Joining - NCU Stage II (Model B NCU) |
| D2-10966 | Operation and Maintenance - Transfer Kit, Missile TE/Rails |
| D2-10974 | Operation and Maintenance - Sling & Harness Engine Skirt |
| D2-10976 | Adapter Cables, Test Set - Raceway Cables Operation and Maintenance |
| D2-10977 | Preinstallation Functional Test Procedure - Adapter Cables, Test Set - Raceway Cables |
| D2-10975 | Functional Acceptance - Sling and Harness - Engine Skirt |
| D2-10990 | Operation and Maintenance - Sling and Harness - G&C Section |
| D2-10991 | Functional Acceptance - Sling and Harness - G&C Section |
| D2-10994 | Operation and Maintenance - Harness - L. H. Panel, Missile Interstage I-II |
| D2-10995 | Functional Acceptance - Harness - L. H. Panel, Missile Interstage I-II |
| D2-11004 | Operation and Maintenance - Installation Kit - Linear Explosive |

SECTION D - REQUIRED DOCUMENTS - (Continued)

| Doc. No. | Title |
|---|---|
| D2-11012 | Operation and Maintenance - Sling - Horizontal Restraint Ring, Engine Stage I, II & III |
| D2-11013 | Functional Acceptance - Sling - Horizontal Restraint Ring, Engine |
| D2-11014 | Operation and Maintenance - Sling - Adapter Ring, Missile Base |
| D2-11015 | Functional Acceptance - Sling - Adapter Ring, Missile Base |
| D2-11027 | Operating and Maintenance - Winch, Portable - Rocket Motor Transfer |
| D2-11028 | Functional Acceptance - Winch, Portable-Rocket Motor Transfer |
| D2-11050 | Functional Acceptance-Platform, Portable-Highway Transfer |
| D2-11051 | Operating and Maintenance-Platform Portable Highway Transfporter |
| D2-11071 | Functional Acceptance-Harness - L. H. Panel, Interstage II-III |
| D2-11072 | Operation and Maintenance - Harness - L. H. Panel, Interstage II-III |
| D2-11073 | Functional Acceptance - Harness - R. H. Panel, Interstage II-III |
| D2-11074 | Operation and Maintenance - Harness - R. H. Panel, Missile Interstage II-III |
| D2-10956 | Operation and Maintenance - Adaptor, Hoisting - Handling Frame, NCU Stage II |
| D2-11081 | Operation and Maintenance-Cover, End - Guidance and Control Section |
| D2-11083 | Operating and Maintenance - Shelter, Missile and Engine Transfer - Environmental, MAB |
| D2-11087 | Operating and Maintenance - AVCOAT Repair Kit |
| D2-11089 | Operating and Maintenance - Shelter, Missile and Engine Transfer- Environmental, Igloo |

SECTION D - REQUIRED PROCEDURE DOCUMENTS (Continued)

| Doc. No. | Title |
|---|---|
| D2-11100 | Functional Acceptance - GTM 77 Storage Rails |
| D2-11172 | Installation Procedure and Installation Test Procedures - Transport Monitor System |
| D2-11173 | Operation Procedure, Alarm Set, Missile Storage Transit Status |
| D2-11289* | Calibration and Verification Procedure for C89 |
| D2-11290* | Functional Test Procedures Test Group-C89 |
| D2-11291* | Calibration and Verification Procedure for C90 |
| D2-11292* | Functional Test Procedures, Test Group C90 |
| D2-11293* | Calibration and Verification Procedure for C91 |
| D2-11294* | Functional Test Procedure - Programming Test Set, C91 |
| D2-11299* | Functional Test Procedures - C95 Portable Power Supply |
| D2-12075* | Calibration and Certification and Test Equipment Index ~~Nozzle Alignment A/N~~ |
| D2-11316* | Calibration and Certification - Gage Set - Nozzle and NCU Alignment Stage I, (A/N) |
| D2-11317* | Calibration and Certification - Gage Set - Nozzle and NCU Alignment Stage II, (A/N) |
| D2-11318* | Calibration and Certification - Gage Set - Nozzle and NCU Alignment Stage III (A/N) |
| D2-11772 | Operation and Maintenance Instructions, Tester, Nozzle Deflection and Torque, M-57 Rocket Motor |
| D2-10965 | FUNCTIONAL ACCEPTANCE - Transfer Kit, Missile TF/Rails |
| D2-12054 | Functional Test Procedure - Ordnance Circuit Test Set |
| D2-12195 | Operation and Maintenance Procedures for Leakage Tester |
| D2-12196 | Pre-Assembly Test - Leakage Tester |

*Autonetics Prepared Documents

SECTION D - REQUIRED PROCEDURE DOCUMENTS (Continued)

| Doc. No. | Title |
|---|---|
| D2-12205 | Ordnance Electrical Test Set - Operation and Maintenance |
| D2-12206 | Functional Test Document - Ordnance Electrical Test Set |
| D2-12208 | Operation and Maintenance - Indicator, Nozzle Deflection and Torque, Stage II |
| D2-12209 | Functional Acceptance - Indicator, Nozzle Deflection and Torque, Stage II |
| D2-12363 | Igniter Holding Tool Installation Kit, Operation and Maintenance Instructions (WS-133 Stage I) |
| D2-12364 | Operation and Maintenance - Spreader, Assembly, Stage I Nozzles |
| D2-12365 | Nozzle Deflection and Torque Test Preassembly Test, Calibration/Certification, Operation and Maintenance Instructions (WS-133 Stage I) |
| D2-12401 | Operation and Maintenance - Console, Missile Checkout |
| D2-12606 Vol. IV | Functional Acceptance - Test Set - Console, Missile Checkout |
| D2-12608 | Operation and Maintenance - Test Set - Console, Missile Checkout |
| D2-12647 | Functional Acceptance - Test Set, Control Circuitry, G&C Temperature (ACO 3035) |
| D2-12976 | Rocket Motor Semitrailer A/M 32A-50 Maintenance Instructions |
| D2-12977 | Operation and Maintenance - Test Set, NCU Zero Electrical Alignment |
| D2-14115 | Functional Test Procedures for Raceway Cable Test Set and Adapter Cables Raceway Cables |
| D2-14116 | Operating Procedures and Maintenance Instructions for Raceway Cable Test Set and Adapter Cables - MAB |
| EM-2084 | Utility Technical Manual - Operation and Service |
| EM-2356 | Operation and Maintenance Test Group, G&C C-89 (A/N) |
| D2-13764 | G&C Section Purging and Drying Procedures |

SECTION D - REQUIRED PROCEDURES DOCUMENTS (Continued)

| Doc. No. | Title |
|---|---|
| EM 2357 | Operation and Maintenance - Test Group - 94756 (C-90) Ground Electronic System (A/N) |
| EM 2358 | Operation and Maintenance - Test Set, Programming C91 (A/N) |
| EM 2386 | Operation and Maintenance-Power Supply, DC Portable C95 (A/N) |
| A/N( ) | Operation and Maintenance-Facilities Test Fixture (A/N) |
| D2-13848 | Operation and Maintenance - Simulators, Airborne Components Missile Test |

SECTION D - REQUIRED DOCUMENTS (CONTINUED)

Manufacturer's Operating and Maintenance Manuals ~~[illegible]~~, will be used for the following SFC/OH items:

Ordnance Circuit Test Set (FSE 7679)

DC Power Supply, KEPCO SC-60-5 or Equiv. (ACO 463)

Voltbox, AC Power Supply (ACO 391)

Jack, Leveling Support (ACO 415)

Recorder, Humidity (Facility)

Test Set, Multipurpose Portable Radio (ACO 324)

Generator, Signal (Frequency Modulation) (ACO 325)

Generator, Video Sweep to 20 Megacycles (ACO 326)

Tester, Vacuum Tube (Mutual Conductance Type) (ACO 327)

Microphone (ACO 328)

Wattmeter, R. F. (ACO 331)

Monitor, Radio Station (Frequency Modulation) (ACO 332)

Load, Dummy (ACO 334)

Probe, Detector Attenuator (ACO 335)

Probe, High Voltage D. C. (ACO 336)

Voltmeter, Vacuum Tube (ACO 337)

Power Supply, DC (ACO 4127)

Power Supply, (ACO 345)

Ammeter 500 Amps (ACO 347)

T. V. Monitor, Closed Circuit (ACO 350)

Tractor, Rocket Motor Truck (ACO 447)

Megohmmeter (ACO 362)

Megger, Ground (ACO 365)

Recorder, Temperature - Portable (ACO 532)

SECTION D - REQUIRED DOCUMENTS (Continued)

Power Supply (ACO 393)

Camera and Tripod, Still Picture (ACO 448)

Load Banks (ACO 388)

Voltmeter, Differential AC-DC (ACO 422)

Thermometer (ACO 3076)

Multimeter (ACO 4001)

Oscilloscope (ACO 4004)

Oscilloscope, Plug-In-Unit (ACO 4172)

Decade Resistor (ACO 907)

Ohmmeter, (ACO 4381)

Power Supply (ACO 376)

Hoist, Lever (Come Along) (ACO 450)

Recorder, Temperature (FACILITY)

Work Table, Electronic Test (ACO 456)

Decade Resistor (ACO 4368)
Test Tool - Test Set, Explosive Set Circuitry (ACO 935)
Hoist, Portable (ACO 405)
Test Set, Power Supply (ACO 929)
Truck, Lift-Jack (ACO 461)

Truck, Lift-Fork (ACO 453)

Truck, Motor Misc. Delivery (ACO 452)

Test Set Assembly, Ordnance Electric (FSE 13)

Test Fixture, Power Supply, MAB & CPA (FSE 7780)

Power Supply Group, MAB (FSE 7717)

Power Supply Group, G&C Test, CPA (FSE 7728)

Air Conditioner (Fig. A 4115)

Tape Perforator and Verifier (ACO 268)

Test Set, Control Circuitry-G&C Temperature (ACO 3035)

SECTION D - REQUIRED DOCUMENTS (Continued)

Valve (ACO 719)

Cable Adapter, Error Indication Test (ACO 731)

Cable Adapter, No-Go and Gross Temperature Test, G&C Ground Cooling (ACO 732)

Bimetal Thermometer (ACO 749)

Flowmeter (ACO 752)

Pressure Sensor (ACO 753)

Flowmeter (ACO 754)

Reservoir (ACO 769)

Resistance Box, Decade (ACO 0593)

Ammeter, AC/DC (ACO 4461)

[illegible], Rocket Motor ([illegible] 101)

Power Supply, NCU Linkage Adjustment, CPA (FSE 7744)

Recording Station (ACO 273)

Tester, Transistor (ACO 323)

Trailer, Ballistic Missile (MGE 4129)

Recorder (ACO 10701)

Semitrailer, Transporter-Erector (MGE 4059)

Truck Tractor, Transporter-Erector (MGE 4075)

Truck, Transporter-Erector, Support (MGE 4119)

Counter, Beckman Model 7360 (ACO )

Test Set, Raceway Cable (FSE 7696)

Tractor (MGE 4130)

Adapter Flow (G&C) Umbilical (ACO 200)

Sampling Bomb (ACO 313)

Microscope (ACO 315)

Conductivity Cell (ACO 674)

Kit Chromate Test (ACO 4623)

SECTION D - REQUIRED EQUIPMENT

The following items are required for equipment maintenance:

1. Test Group, Ground Electronic System, C-90 (ACO 0623)
2. Test Fixture, Drawer Tester, Missile Checkout Console (FSE 7781)
3. Puller, Printed Circuit Remover (ACO 3009)
4. Test Set, Programming, C-91 (ACO 0624)
5. Test Set Cooler, Liquid, Guidance Section (ACO 3035)
6. Kit, Functional Test and Fault Isolation for C89 Test Adapter (ACO 10715)
7. Kit, Functional Test and Fault Isolation for C90 Test Adapter (ACO 10716)
8. Kit, Functional Test and Fault Isolation for C91P Programmer - Fault Location Test Center (ACO 10717)
9. Kit, Module Connection Alignment (ACO 0583)
10. ~~[illegible]~~ R
11. Extender, Circuit Card, Universal (ACO 285)

SECTION D - REQUIRED DRAWINGS

25-28581 Maintenance Procedures for Translating Jacks R

25-27632 Functional Acceptance-Clamp Assembly-Missile Transfer

25-27486 Functional Acceptance-Alignment Set - Missile Transfer

25-32273 Maintenance Procedures for Carriage Positioning Set

~~25-34559 Maintenance Information for Simulators~~ R

25-17299 Rail Assembly - Bridge Motor Transfer

25-29338 Junction Box, Test MAB

25-29553 Shipping and Storage Container Ballistic Missile

29-21442 Ordnance Cable - Test Box

29-26786 Dummy Load Re-Entry Vehicle

BOEING AIRPLANE COMPANY

NUMBER D2-11162 MODEL NO. WS-133A

TITLE SECTION "E" MISSILE REPAIR AND REWORK

PREPARED BY PLANT 77 REQUIREMENTS UNIT 6/1/61

SUPERVISED BY O. A. Severide 6/5/61
O. A. Severide

APPROVED BY W. H. Charlot 6/6/ BIM-M
W. H. Charlot (DATE)

APPROVED BY C. R. McGehee 6/6/ ENGINEERING
C. R. McGehee

5-78200-5120-68145
CHARGE NUMBER

JUN - 1 1961

REVISED 8-31-61
11-15-61

SECTION TITLE PAGE

| VOL. | NO. D2-11162 |
|---|---|
| SEC. E | PAGE 1 |

BAC 4131 B

2-7000

# ACTIVE-CHANGED PAGE

| ACTIVE | | | CHANGED | | | | | ACTIVE | | | CHANGED | | | | |
|---|---|---|---|---|---|---|---|---|---|---|---|---|---|---|---|
| SECTION | PAGE | DATE | SECTION | PAGE REVISED | PAGE ADDED | PAGE DELETED | DATE | SECTION | PAGE | DATE | SECTION | PAGE REVISED | PAGE ADDED | PAGE DELETED | DATE |
| E | 1 | 11-15-61 | E | COMPLETE REVISION | | | 8-31-61 | | | | E | 2 | 20a | | 6-1-62 |
| | 2 | 1-11-63 | | | | | | | | | | 4 | 20b | | |
| | 2a | 1-11-63 | | | | | | | | | | 4a | 23a | | |
| | 3 | 6-1-62 | | | | | | | | | | 10 | | | |
| | 4 | 6-1-62 | E | | 4a | | 8-31-61 | | | | | 11 | | | |
| | 4a | 6-1-62 | E | COMPLETE REVISION | | | 11-15-61 | | | | | 12 | | | |
| | 5 | 11-15-61 | | | | | | | | | | 13 | | | |
| | 6 | | | | | | | | | | | 15 | | | |
| | 7 | 11-15-61 | | | 14 | | | | | | | 16 | | | |
| | 8 | 9-19-62 | | | 15 | | | | | | | 17 | | | |
| | 9 | 11-15-61 | | | 16 | | | | | | | 18 | | | |
| | 10 | 8-1-62 | | | 17 | | | | | | | 19 | | | |
| | 11 | 8-17-62 | | | 18 | | | | | | | 20 | | | |
| | 12 | 10-22-62 | | | 19 | | | | | | | 21 | | | |
| | 13 | 6-1-62 | | | 20 | | | | | | | 22 | | | |
| | 14 | 2-1-62 | | | 21 | | | | | | | 23 | | | |
| | 15 | 1-11-63 | | | 22 | | | | | | | 24 | | | |
| | 16 | 6-1-62 | | | 23 | | | | | | | 25 | | | |
| | 17 | 9-19-62 | | | 24 | | | | | | | 26 | | | |
| | 18 | 9-19-62 | | | 25 | | | | | | | 28 | | | |
| | 19 | 10-22-62 | | | 26 | | | | | | E | 29 | | | 6-1-62 |
| | 20 | 11-26-62 | | | 27 | | | | | | E | 2 | | | 7-13-62 |
| | 20a | 1-18-63 | E | | 28 | | 11-15-61 | | | | | 15 | | | |
| | 20b | 10-22-62 | E | 2 | 29 | | 2-1-62 | | | | | 17 | | | |
| | 21 | 1-11-63 | | 3 | | | | | | | | 19 | | | |
| | 22 | 8-17-62 | | 10 | | | | | | | | 20 | | | |
| | 23 | 1-11-63 | | 11 | | | | | | | | 23 | | | |
| | 23a | 1-18-63 | | 12 | | | | | | | | 25 | | | |
| | 24 | 1-11-63 | | 13 | | | | | | | | 26 | | | |
| | 25 | 10-22-62 | | 14 | | | | | | | E | 28 | | | 7-13-62 |
| | 26 | 1-11-63 | | 15 | | | | | | | E | 2 | | | 8-17-62 |
| | 27 | 2-1-62 | | 16 | | | | | | | | 8 | | | |
| | 28 | 10-22-62 | | 17 | | | | | | | | 11 | | | |
| E | 29 | 6-1-62 | | 18 | | | | | | | | 20 | | | |
| | | | | 19 | | | | | | | | 20a | | | |
| | | | | 20 | | | | | | | | 22 | | | |
| | | | | 21 | | | | | | | | 23 | | | |
| | | | | 22 | | | | | | | | 23a | | | |
| | | | | 23 | | | | | | | | 24 | | | |
| | | | | 24 | | | | | | | | 25 | | | |
| | | | | 25 | | | | | | | | 26 | | | |
| | | | | 26 | | | | | | | E | 26 | | | 8-17-62 |
| | | | | 27 | | | | | | | | | | | |
| | | | E | 28 | | | 2-1-62 | | | | | | | | |

SEC

# ACTIVE-CHANGED PAGE

| ACTIVE | | | CHANGED | | | | | ACTIVE | | | CHANGED | | | | |
|---|---|---|---|---|---|---|---|---|---|---|---|---|---|---|---|
| SECTION | PAGE | DATE | SECTION | PAGE REVISED | PAGE ADDED | PAGE DELETED | DATE | SECTION | PAGE | DATE | SECTION | PAGE REVISED | PAGE ADDED | PAGE DELETED | DATE |
| | | | E | 2 | | | 9-14-62 | | | | | | | | |
| | | | | | 2a | | | | | | | | | | |
| | | | | 8 | | | | | | | | | | | |
| | | | | 17 | | | | | | | | | | | |
| | | | | 18 | | | | | | | | | | | |
| | | | | 19 | | | | | | | | | | | |
| | | | | 23 | | | | | | | | | | | |
| | | | E | 24 | | | 9-14-62 | | | | | | | | |
| | | | E | 2 | | | 10-22-62 | | | | | | | | |
| | | | | 2a | | | | | | | | | | | |
| | | | | 12 | | | | | | | | | | | |
| | | | | 19 | | | | | | | | | | | |
| | | | | 20 | | | | | | | | | | | |
| | | | | 20b | | | | | | | | | | | |
| | | | | 23 | | | | | | | | | | | |
| | | | | 25 | | | | | | | | | | | |
| | | | | 26 | | | | | | | | | | | |
| | | | E | 28 | | | 10-22-62 | | | | | | | | |
| | | | E | 2 | | | 11-26-62 | | | | | | | | |
| | | | | 2a | | | | | | | | | | | |
| | | | | 20 | | | | | | | | | | | |
| | | | | 21 | | | | | | | | | | | |
| | | | E | 23a | | | 11-26-62 | | | | | | | | |
| | | | E | 2 | | | 1-11-63 | | | | | | | | |
| | | | | 2a | | | | | | | | | | | |
| | | | | 15 | | | | | | | | | | | |
| | | | | 20a | | | | | | | | | | | |
| | | | | 21 | | | | | | | | | | | |
| | | | | 23 | | | | | | | | | | | |
| | | | | 23a | | | | | | | | | | | |
| | | | | 24 | | | | | | | | | | | |
| | | | | 26 | | | | | | | | | | | |
| | | | E | | | | 1-11-63 | | | | | | | | |

▷ See revision description page, preceding Document Table of Contents

REVISED 1-11-63

U3 4288 1000 (WAS BAC 4131 C)

TABLE OF CONTENTS

SECTION "E"

MISSILE REPAIR AND REWORK


| | PAGE NO. |
|---|---|
| TITLE PAGE | 1 |
| REVISION PAGE | 2 |
| TABLE OF CONTENTS | 3 |
| SCOPE | 4 |
| GROUND RULES | 4 |
| MASTER FLOW DIAGRAM | 5 |
| SUB-FLOW DIAGRAM - RECEIVE & HANDLE MALFUNCTIONED MISSILE | 6 |
| TECHNICAL FUNCTIONAL ANALYSIS | 7 |
| 1.0 MISSILE REPAIR AND REWORK | 7 |
| 1.1 RECEIVE AND HANDLE MALFUNCTIONED MISSILE | 7 |
| 1.2 DISASSEMBLE AS REQUIRED FOR FAULT ISOLATION | 10 |
| 1.3 PERFORM FAULT ISOLATION | 10 |
| 1.4 REWORK, TEST AND REASSEMBLE | 16 |
| 1.5 PREPARE FOR SHIPMENT | 20 |
| 1.6 RECORD DATA AND PREPARE FOR AIR FORCE ACCEPTANCE | 20 |
| 1.7 SELL MISSILE TO AIR FORCE | 20 |
| REQUIRED EQUIPMENT LIST | 22 R |
| REQUIRED DOCUMENT LIST | 25 R |
| REQUIRED DRAWING LIST | 27 R |
| ILLUSTRATIONS | 28 R |

LEE

R

## SECTION E

## MISSILE REPAIR AND REWORK

### SCOPE

This section presents the technical requirements for reworking malfunctioned Wing I missiles which require rework prior to completion for Air Force acceptance at A/F Plant 77, or those returned from the launch site prior to acceptance in the launch tube by the Air Force.

### GROUND RULES

In addition to the general ground rules in Section "A", the following will apply specifically to this section.

1. The Air Force will determine the mode of transportation (rail or air) of the missile (in SSCBM) between A/F Plant 77 and the designated unloading area for the operational base. The Air Force will provide the air transportation; and will be responsible for and will accomplish the loading and unloading of the missile air shipments. Boeing will be responsible for loading and unloading rail shipments.
2. Wing I missiles will be returned to Plant 77 from the launch site less the R/V.
3. Replacement components required for missile rework will be provided through normal production control functions and will have been properly tested and inspected per Section "B" of this document.
4. The functions required in this section, which are the same as those required in section "B", are referenced to the appropriate function of that section. The equipment and procedures required in the reference section "B" function will apply equally to this section.

SECTION E - GROUND RULES (Continued)

5. As a normal operation throughout this section, recording of test data and its acceptance by the Quality Control Department will be accomplished through the use of the Integrated Record System. Accordingly, a specific function or reference to this requirement will not be called out in describing the requirements for each functional test.

6. Documentation requirements will include the documents required in Section "B" in addition to those itemized in this section.

7. Required missile rework will be accomplished by removing and replacing end item components or subassemblies for which spares have been specifically provided. (Maintenance of the Airborne items is listed in document D2-10885-3, Maintenance Analysis and Description - Depot Level Reparables - WS-133 and Weapons System - H&D.)

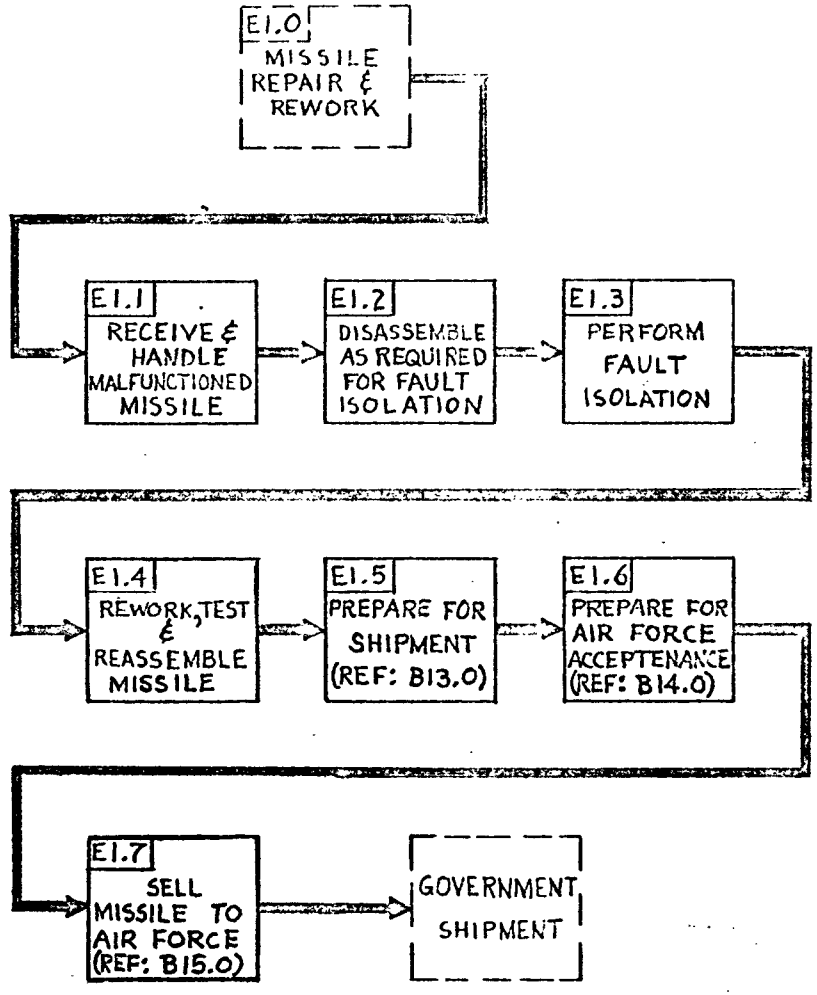


MASTER FLOW (SECT. E)

E1.0

MISSILE REPAIR & REWORK

FUNCTION No E1.0.

R

R

REVISED 8-31-61 11-15-61
J3 4280 2000 (WAS BAC 4131D) JUN 1 1961
BOEING VOL. SEC. E NO. D2-11162 PAGE 5

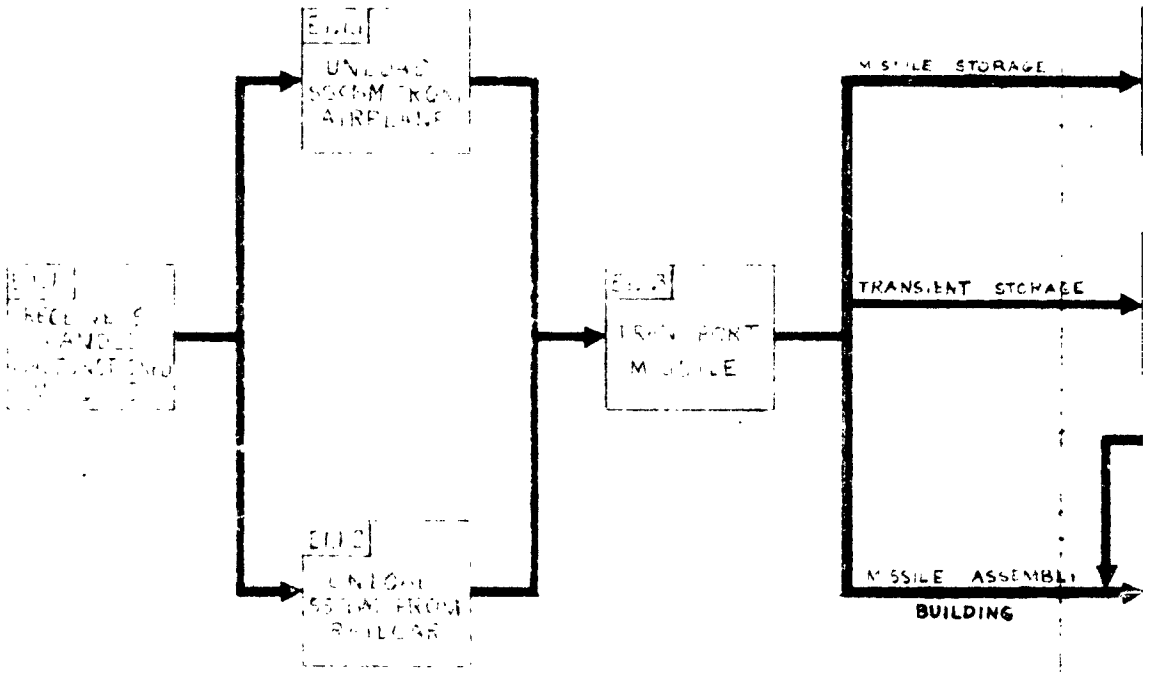
TRANSIENT STORAGE
BUILDING

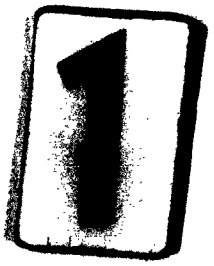

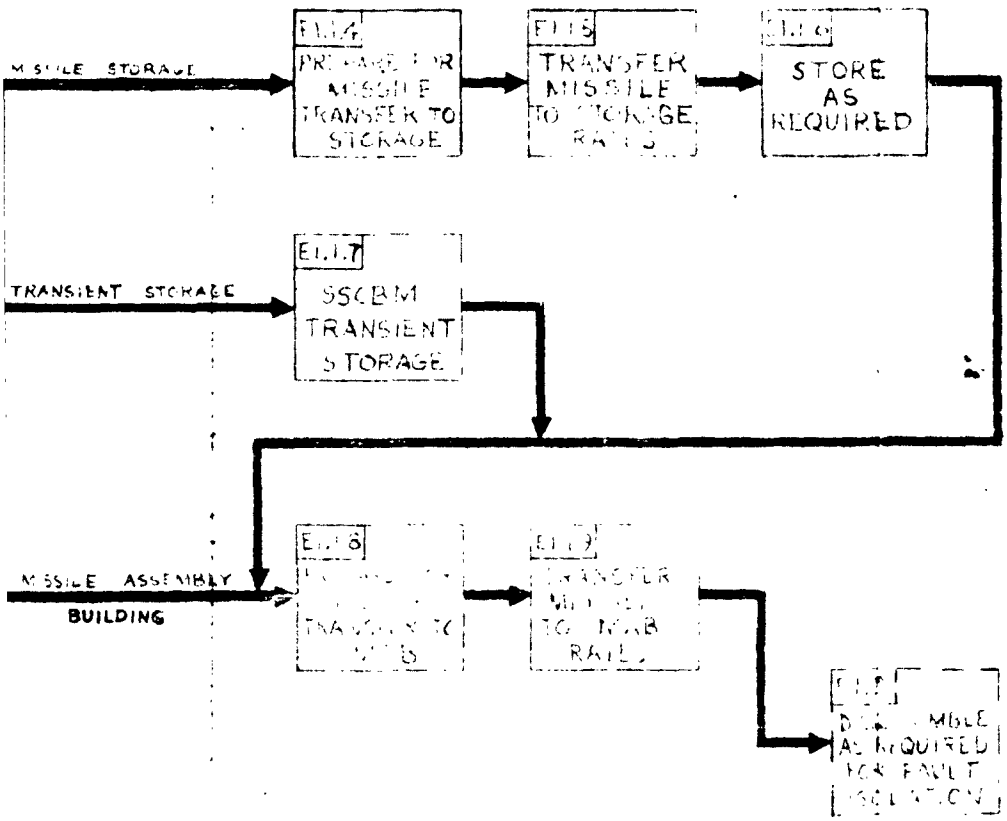


2

| | | | | |
|---|---|---|---|---|
| CAL | REVISED | DATE E2.0 | RECEIVE & HANDLE MALFUNCTIONED MISSILE | SECT. E |
| CHECK | | | | |
| APP | 8-31-61 | | | D2-11162 |
| APR | 11-5-61 | | BOEING AIRPLANE COMPANY SEATTLE 24 WASHINGTON | PAGE 6 |

U3 4078 7000 (WAS BAC 1656-H2)

| ASSEMBLY OR CHECKOUT FUNCTION AND TECHNICAL REQUIREMENTS | RECOMMENDED EQUIPMENT OR DOCUMENT |
|---|---|
| 1.0 MISSILE REPAIR AND REWORK | |
| Repair and rework of missiles returned from the launch site prior to Air Force acceptance will involve accomplishment of the following steps: | |
| A. Receive and handle malfunctioned missile. | |
| B. Disassemble as required for fault isolation. | |
| C. Perform fault isolation. | |
| D. Rework, test, and reassembly. | |
| E. Record data and sell to Air Force. | |
| F. Prepare for shipment. | |
| 1.1 RECEIVE AND HANDLE MALFUNCTIONED MISSILE | |
| A requirement exists to receive and handle the missiles upon return to A/F Plant 77. The handling shall be accomplished by unloading the SSCBM (containing the missile) and Ballistic Missile Trailer from the rail car or the SSCBM (containing the missile) from the airplane onto the Ballistic Missile Trailer and transporting to either an MAB, an SSCBM transient storage area or a missile storage igloo. | |
| 1.1.1 UNLOAD SSCBM FROM AIRPLANE | |
| Unloading SSCBM from C-133 Airplane will be directed and accomplished by the Air Force. OOAMA will provide the Ballistic Missile trailer and tractor to the airplane transfer area. | |

| ASSEMBLY OR CHECKOUT FUNCTION AND TECHNICAL REQUIREMENTS | RECOMMENDED EQUIPMENT OR DOCUMENT |
|---|---|
| 1.1.2 UNLOAD SSCBM FROM RAIL CAR | |
| The car-to-ramp bridges shall be placed between unloading ramp and rail car, and the tractor backed up the ramp to the ballistic missile trailer on the rail car. The loaded ballistic missile trailer shall be connected to the tractor and towed from the rail car. | Required Equipment See Function B13.5 |
| 1.1.3 TRANSPORT MISSILE TO MAB, SSCBM TRANSIENT STORAGE OR MISSILE STORAGE | |
| The missile shall be transported by SSCBM, Ballistic Missile Trailer and Tractor to a designated area. | |
| No additional equipment will be required to perform this function. | |
| 1.1.4 PREPARE FOR MISSILE TRANSFER TO STORAGE | |
| Missile transfer to storage shall be accomplished by positioning the Ballistic Missile Trailer to the storage igloo and removing tractor, installing electrical grounding lead, translating jacks and alignment equipment, installing transfer equipment, storage rail grounding cable to missile and connecting transfer cable to missile support adapter ring. Environmental control shelter shall be used if required. | Required Equipment See Function B13.6 |
| NOTE: Rocket Motor, Restraint Devices shall be installed prior to roll transfer of the missile into storage | Required Equipment See Function B2.2 |
| | FUNCTION E1.1.2 |

| ASSEMBLY OR CHECKOUT FUNCTION AND TECHNICAL REQUIREMENTS | RECOMMENDED EQUIPMENT OR DOCUMENT |
|---|---|
| 1.1.5 TRANSFER MISSILE TO STORAGE RAILS<br>The missile shall be transferred by engine and missile storage rail winch from SSCBM into the MSB and secured in place by installing wheel blocks to rocket motor carriages. The rocket motor carriages shall be grounded by attaching grounding jumpers to grounding terminals. All equipment used in preparing missile for transfer shall be removed or disconnected. The Alarm Set (MGE 4187) shall be disconnected and sent to storage. | Required Equipment See Function B13.7 |
| 1.1.6 STORE AS REQUIRED<br>Technical requirements for this sub-function are the same as described in function B13.8. | Required Equipment See Function B13.8 |
| 1.1.7 SSCBM TRANSIENT STORAGE<br>Technical requirements for this sub-function are the same as described in function B13.8.2. | Required Equipment See Function B13.8.2 |
| 1.1.8 PREPARE MISSILE FOR TRANSFER TO MAB<br>Technical requirements for this sub-function are the same as described in function B13.1 . | Required equipment See function B13.1 |
| 1.1.9 TRANSFER MISSILE TO MAB RAILS<br>The missile shall be transferred by the missile assembly rail winch from SSCBM into MAB, and secured to the missile assembly rails by installing wheel blocks to rocket motor carriages and attaching rocket motor | |

FUNCTION E1.1.5

REVISED 11-15-61

| ASSEMBLY OR CHECKOUT FUNCTION AND TECHNICAL REQUIREMENTS | RECOMMENDED EQUIPMENT OR DOCUMENT |
|---|---|
| 1.1.9 TRANSFER MISSILE TO MAB RAILS (CONT) | |
| carriage grounding jumpers to grounding terminals. After transfer, all equipment used in preparing missile for transfer will be removed or disconnected including the Alarm Set (MGE 4187). The Alarm Set shall be returned to stores. | |
| 1.2 DISASSEMBLE AS REQUIRED FOR FAULT ISOLATION | |
| Disassembly shall be initiated by the appropriate forms for missile disassembly as required to accomplish testing necessary to isolate the fault. | |
| The Guidance and Control Section shall be removed and sent to the CPA for computer reprogramming and functional retest (See Function E1.3.2). A qualified Guidance and Control Section received from the CPA shall be installed. | |
| 1.3 PERFORM FAULT ISOLATION | |
| The missile shall be tested to determine if a downstage malfunction exists by performing the missile functional tests per function B10.0. Should the test be performed normally, indicating that the failure was not in the downstage area, no further investigation will be required and the missile will be completed per function B11.0; however, if the test indicates a malfunction, perform the following test, to determine which component is faulty. | Test Set Assembly, Ordnance Circuit, (FSE 7679)<br>D2-13445 |
| | FUNCTION E1.1.9 |

| ASSEMBLY OR CHECKOUT FUNCTION AND TECHNICAL REQUIREMENTS | RECOMMENDED EQUIPMENT OR DOCUMENT |
|---|---|
| 1.3 PERFORM FAULT ISOLATION (CONT) | |
| The end item which is faulty shall then be removed. (See Function E.1.4.1). Detailed fault isolation shall be performed only when required by written MRB instructions, and shall be performed in the appropriate area. Authorized personnel will initiate the appropriate forms required for MRB action. | |
| 1.3.1 PERFORM FAULT ISOLATION TEST | |
| This testing shall consist of removing the connectors from the NCU's or AAU which are suspected of malfunctioning and connecting them to the component simulators prior to conducting the test; performing a special series of tests with the simulators installed to isolate the faulty airborne component; and disconnecting the component simulators to return them to storage. | Simulators, Airborne Components, Missile Test, (FSE 7695)<br>D2-13849 Airborne Component Fault Isolation Procedures R |
| 1.3.2 PERFORM MISSILE COMPONENT TESTS | |
| Non-ordnance missile components requiring functional test shall be received in the Component Processing Area for testing. (See B2.1)<br>Functional test and handling procedures are required and shall be in accordance with the appropriate procedures. | See document list at left of following page |

| ASSEMBLY OR CHECKOUT FUNCTION AND TECHNICAL REQUIREMENTS | RECOMMENDED EQUIPMENT OR DOCUMENT |
|---|---|
| D2-11323, Functional Test Procedures, Guidance Section, NS10P and NS10Q | |
| D2-11306, Functional Test Procedures, NCU, Stage I, P70A | |
| D2-11307, Functional Test Procedures, NCU, Stage I, P70B | |
| D2-11308, Functional Test Procedures, NCU, Stage II, P71A | |
| D2-11309, Functional Test Procedures, NCU, Stage II, P71B | |
| D2-11310, Functional Test Procedures, NCU, Stage III, P72A | |
| D2-11311, Functional Test Procedures, NCU, Stage III, P72B | |
| D2-11304, Functional Test Procedures, Angular Accelerometer P68A | |
| D2-11305, Functional Test Procedures, Angular Accelerometer P68B | |
| D2-11312, Fault Isolation Test Procedures-Raceway Cables, Stage I, Stage II, and Stage III | |
| EM 2358 Operation and Maintenance - Test Set, Programming, C91 | |

| ASSEMBLY OR CHECKOUT FUNCTION AND TECHNICAL REQUIREMENTS | RECOMMENDED EQUIPMENT OR DOCUMENT |
|---|---|
| 1.3.2.1 PREPARE FOR TEST | |
| The following missile components shall be received at the Component Processing Area in their shipping containers: | Truck, Lift-Fork (ACO 453) R<br>Truck, Motor-Misc. Delivery (ACO 452) R |
| A. The G&C section with handling ring, dust cover, window cover and end cover (FSE 7600) shall be removed from the container and installed on a facility test fixture. The hoisting sling and cover shall be removed and the test fixture placed on the indexed location of the G&C test position in the integrated test area (see Figure 1-E). The dust cover assembly shall be removed and the tape controlled programming and printout equipment connected to the G&C section. A spanner wrench and special adapter shall be used to install and remove the umbilical connector. | Hoisting Sling & Cover (ACO 0608)<br>Facility Test Fixture (ACO 0565)<br>Hoist, Portable (ACO 405) R<br>Adapter, Spanner Wrench (ACO 3119)<br>Sling, G&C Section Container Cover (ACO 468) R<br>Drawing 25-27596<br>G&C Test Position (See Integrated Test Area) |
| NOTE: If the G&C section is received directly from the receiving and inspection area, a functionally tested battery package shall be installed and the necessary reassembly and sealing accomplished. If the section is returned from the MAB for test, the battery package will have been installed. The test fixture with the G&C section shall then be placed on the indexed location and connected as indicated above. | |
| | FUNCTION E1.3.21 |

| ASSEMBLY OR CHECKOUT FUNCTION AND TECHNICAL REQUIREMENTS | RECOMMENDED EQUIPMENT OR DOCUMENT |
|---|---|
| 1.3.2.1 PREPARE FOR TEST (CONT) | |
| B. The NCU's and adapter frames shall be removed from their containers and installed on their respective trailers. After removal of the NCU sling, the trailer and NCU assembly shall be moved to the NCU test position in the integrated test area (See Figure 1-E). The tape controlled programming and printout equipment shall be connected. | NCU Sling (H9) (FSE 610)<br>NCU Trailer (H2) Stage I (FSE 614)<br>NCU Trailer (H8) Stage II (FSE 615)<br>NCU Trailer (H13) Stage III (FSE 620)<br>AA-0304-072 NCU Sealing Specification |
| NOTE: If the 1st or 2nd stage NCU is received directly from the receiving and inspection area, a functionally tested battery package shall be installed and the necessary reassembly and sealing accomplished. (The 3rd stage NCU has no provisions for batteries). If the NCU is returned from the MAB for test, the battery package will have been installed. The trailer and the NCU shall then be removed to the NCU test position. | Drawing 25-27597 25-27598<br>NCU Test Position (See Integrated Test Area) |
| C. The angular accelerometer unit shall be removed from the container, handcarried to the angular accelerometer test position of the integrated test area (see figure 1-E), positioned on the test bench and connected to the tape controlled programming and printout equipment. | AAU Test Position (See Integrated Test Area) |

FUNCTION E1.3.2.1

| ASSEMBLY OR CHECKOUT FUNCTION AND TECHNICAL REQUIREMENTS | RECOMMENDED EQUIPMENT OR DOCUMENT |
|---|---|
| G&C TEST POSITION | Integrated Test Area (see equipment at left) |
| Power Supply, DC Portable (C-95) (ACO 0667) | |
| Power Supply Group, G&C Test, CPA (FSE 7728) | |
| Cable Assembly, Interconnecting - G&C Test Position (FSE 7726) | |
| Liquid Cooling Equipment, Ground Guidance and Control (ACO 9278) | |
| Bimetal Thermometer (ACO 749) | R |
| Hose Assembly, Cooling, G&C Section (FSE 7741) | |
| Pressure Sensor (ACO 753) | R |
| Table, Work, Electronic Test (ACO 456) | |
| Flowmeter (ACO 754) | R |
| Test Group, G&C (C-89) (ACO 0622) | |
| Test Set, Programming (C-91) (ACO 0624) | |
| Junction Box, G&C Test, CPA (Part of ACO 0622) | |
| NCU TEST POSITION | |
| Cable Assembly, Interconnecting-NCU Test Position, CPA (FSE 7727) | |
| Power Supply Group, NCU Test, CPA (FSE 7729) | |
| Distribution Box, NCU Test, CPA (FSE 7683) | |
| *Test Group, Guidance & Control (C-89)(ACO 0622) | |
| *Test Set, Programming (C-91) (ACO 0624) | |
| *Recording Station (ACO 273) | |
| AAU TEST POSITION | |
| Table, Work-Electronic Test (ACO 456) | |
| *Test Group, Guidance and Control (C-89) (ACO 0622) | |
| *Test Set, Programming (C-91) (ACO 0624) | |
| *Recording Station (ACO 273) | |

FUNCTION E1.3.2.1

| ASSEMBLY OR CHECKOUT FUNCTION AND TECHNICAL REQUIREMENTS | RECOMMENDED EQUIPMENT OR DOCUMENT |
|---|---|
| AAU TEST POSITION (CONT)<br>*Power Supply Group, NCU Test, CPA (FSE 7729)<br>*Cable Assembly, Interconnecting-NCU Test Position, CPA (FSE 7727)<br>*Distribution Box, NCU Test, CPA (FSE 7683)<br>*Junction Box, NCU Test, CPA (Part of ACO 0622)<br>NOTE: The Ground Electronic System Test Group (ACO 0623) and Power Cable Assembly (FSE 7736) are also installed in this area. For useage see Function D1.1.<br>* Equipment which has multiple useage; see other test positions for same item. | Integrated Test Area (Continued) |
| 1.3.2.1 (Cont)<br>D. The raceway cables, Stage I, and II and III, shall remain in their containers during testing; however, the container cover shall be removed and the connectors shall be exposed for easy accessability. The cables shall be moved to the raceway cables test position (See Figure 3-B, Section B) and connected to the test equipment. Standard tools shall be used to connect the raceway cables to the test set. | Adapter Cables, Test Set, Raceway Cables (FSE 7715)<br>Cable Tester (ACO 402)<br>D2-10976 (O&M)<br>Container, Raceway Cable, Stage I (ACO 459 )<br>Container, Raceway Cable, Stage II (ACO 458 )<br>Container, Raceway Cable, Stage III (ACO 457 ) |
| | FUNCTION 1.3.2.1 |

| ASSEMBLY OR CHECKOUT FUNCTION AND TECHNICAL REQUIREMENTS | RECOMMENDED EQUIPMENT OR DOCUMENT |
|---|---|
| 1.3.2.2 PERFORM COMPONENT TEST | |
| Prior to commencing the actual functional test, the G&C, NCU and Accelerometer test equipment shall phase through self-checks, regulated by appropriate programmed tapes, and will terminate the test in event of a malfunction. The functional tests shall consist of inserting the appropriate Autonetics programmed tapes in the test equipment and initiating the automatic test sequence. Test results shall be determined by automatic read-out. | Program Tapes, Angular Accelerometer Test (FSE 12011)Mod A (FSE 12012) Mod B<br><br>Program Tapes, G&C Test NS10P (ACO 10729) Model A (ACO 12008) Model B<br>Program Tapes G&C Test NS10Q (ACO 10735) Model A ACO 10736) Model B<br><br>Program Tape NCU Test (FSE 12009) Model A (FSE 12010) Model B<br><br>Missile Checkout Console/NS10 Tape (FSE 12014) Model A (FSE 12013) Model B |
| A. The G&C section testing shall include, computer fill and verify, computer self test, a complete N-10 end-to-end functional test, and fill and verify the test program to be conducted in the Missile Assembly Building. | |
| B. The testing of the NCU's shall be a programmed test. | |
| C. The testing of the angular accelerometer shall be a programmed test. It will not be necessary to move the accelerometer during testing. | |
| D. The testing of the raceway cables shall consist of measuring continuity and insulation resistance. Test results shall be determined by readings on the raceway cable test set. | |
| 1.3.2.3 DISCONNECT TEST EQUIPMENT | |
| The dust cover assembly shall be reinstalled on the G&C section immediately upon removal of the G&C umbilical. | |

FUNCTION 1.3.2.2

| ASSEMBLY OR CHECKOUT FUNCTION AND TECHNICAL REQUIREMENTS | RECOMMENDED EQUIPMENT OR DOCUMENT |
|---|---|
| 1.3.2.4 PREPARE FOR STORAGE<br>The G&C section shall be purged and dryed with dry air. Purging procedures are required. The G&C end cover shall be left in place. (For repackaging and transportation to storage, see function B4.1) | Purging and Drying Kit (ACO 466)<br>G&C Section Purging and Drying Procedures (D2-13764) |
| 1.4 REWORK, TEST AND REASSEMBLE MISSILE<br>This function consists of repairing and replacing the faulty component, running a sub-system test, completing the missile assembly and running a complete missile system test, per appropriate functions of Section B. | |
| 1.4.1 REPAIR MISSILE COMPONENTS<br>The faulty component shall be removed in accordance with removal procedures and shall receive proper MRB disposition. Minor repairs will be accomplished as follows. | |
| 1.4.1.1 PERFORM MISSILE INTERSTAGE AND SKIRT REPAIR<br>Repair of the minor scratches, cracks, or crazing of AVCOAT on the interstages and skirt may be accomplished. | Kit, Ablative Material Repair (FSE 7665)<br>D2-11087<br>D2-7295 |
| 1.4.1.2 PERFORM ROCKET MOTOR REPAIR<br>The following rocket motors repairs by be accomplished at Air Force Plant 77:<br>a. Remove and replace damaged rocket motor igniters, safe and arm ordnance devices, or the 3rd stage | (See documents at left) on next page)<br>Kit, Pyrogen Instl. & Removal (Stage I) (FSE 110) |

FUNCTION 1.3.2.4

| ASSEMBLY OR CHECKOUT FUNCTION AND TECHNICAL REQUIREMENTS | RECOMMENDED EQUIPMENT OR DOCUMENT |
|---|---|
| 1.4.1.2 PERFORM ROCKET MOTOR REPAIR (CONT) | Kit, Instl, & Removal, Ordnance Devices (Stage II)(FSE 31) Kit, Instl, & Removal Ordnance Device (Stage III)(FSE 201) Container, Thrust Termination (FSE 206) Container, Igniter Stage I, (FSE 124) Container, Igniter Stage II, (FSE 12) Container, Igniter S&A Device, Stage I, II, & III (FSE 108) Container, Igniter Stage III (FSE 204) |
| thrust termination switch. The damaged device will be placed in an empty container and returned to the appropriate rocket motor associate contractor. | |
| D2-11762, Operation Instruction, Kit, Installation and Removal Ordnance Device (Stage III) | |
| D2-11776, Operation & Maintenance Instructions M57 Rocket Motor | |
| D2-12216, M56 Rocket Motor Handling, Operating Maintenance Procedures | |
| D2-12363, Ignitor Holding Tool Installation Kit Operation and Maintenance Instructions (WS-133, Stage I) | |
| D2-12368, M55 Rocket Motor Maintenance and Repair Instructions | |
| NOTE: A low-pressure leakage check of the Stage I & II rocket motors shall be performed subsequent to the removal and replacement of either the igniter, igniter S&A, or both. | Tester, Leakage (FSE 7) D2-12195 Plug Kit, Nozzle Stage II, (FSE 163) Plug Kit, Nozzle Stage I (FSE 126) D2-13510 O&M R |
| WARNING<br>It is required that a 60 PSI fail-safe blow out plug be installed downstream of the nitrogen pressure regulator in the supply line to prevent excessive pressure within the rocket motors during leakage testing. Excessive pressure would cause a personnel safety problem without high-pressure motor restraining facilities. | |
| b. Repair minor cracks, crazes or chips in the external AVCOAT insulation. | Kit, Ablative Material Repair (FSE 7665) D2-11087 D2-7295 D2-12368 R |
| | FUNCTION E1.4.1.2 |

| ASSEMBLY OR CHECKOUT FUNCTION AND TECHNICAL REQUIREMENTS | RECOMMENDED EQUIPMENT OR DOCUMENT |
|---|---|
| 1.4.1.2 PERFORM ROCKET MOTOR REPAIR (CONT) | |
| c. Repair minor cracks, crazes, or chips in the base external insulation on Stage I and Stage II. | Kit, Base-Insulation Repair, Stage II (FSE 30) |
| d. On Stage II and III Rocket Motors remove and replace damaged nozzle insulation zipper cover or boot. | Kit, Base-Insulation Repair, Stage I (FSE 133) D2-12368 R |
| e. On Stage II motor only, remove and replace raceway retaining pins, bushings, or adapter keys. | Kit, Base-Insulation Repair, St. III (FSE 236) D2-11775 |
| f. Should it be determined during normal inspection that a nozzle is stuck or extremely difficult to actuate, perform a nozzle deflection and torque test to determine acceptability of motor for assembly. | Indicator, Nozzle Deflection and Torque, Stage I (FSE 123) Indicator, Nozzle Deflection and Torque, Stage II (FSE 15) Tester, Nozzle Deflection and Torque, Stage III (FSE 202) D2-12365 (Stage I) D2-11772 (Stage III) D2-12208 (Stage II) |
| g. Straighten bent raceway brackets. | Sling, Horizontal Restraint Ring, Engine Stage I, II, III (FSE 7632) |
| NOTE: Should it become necessary to return a rocket motor to the Associate Contractor as a result of being subjected to excessive environment, insulation damage beyond A/F Plant 77 repair capability, or damage requiring Associate Contractor Repair; the horizontal restraint rings shall be replaced on the rocket motor prior to loading in the appropriate highway transporter for return delivery to the Associate Contractor Facility. | Horizontal Restraint Engine, 2nd Stage (FSE 7764) Horizontal Restraint Engine, 1st Stage (FSE 7763) Horizontal Restraint Engine, 3rd Stage (FSE 7765) D2-9555 Bridle, Carriage 1st Stage Rocket Motor Truck (FSE 7745) D2-10941 (O&M) R Winch Portable-Rocket Motor Transfer (FSE 7653) (Optional) R |
| | FUNCTION E1.4.1.2 |

| ASSEMBLY OR CHECKOUT FUNCTION AND TECHNICAL REQUIREMENTS | RECOMMENDED EQUIPMENT OR DOCUMENT |
|---|---|
| 1.4.1.2 PERFORM ROCKET MOTOR REPAIR (CONT) | |
| h. Should a Nozzle Alignment Verification Test in the MAB indicate that the alignment of the nozzles is improper, and the linkage adjustments to the recommended setting for the specific motor are correct; perform a nozzle alignment check to determine the linkage adjustment values. | Gage, Nozzle Align-Stage I (FSE 10163)<br>Gage, Nozzle Align., Stage II (FSE 10165)<br>Gage, Nozzle Align. Stage III (FSE 10167)<br>D2-13849 Nozzle Alignment Measuring Procedure<br>Dwg. 85010-201<br>Dwg. 85011-201<br>(FSE 114) Spreader Assy<br>~~P/N [illegible] (Aerokol)~~<br>P/N T 416090 (Aerojet) |
| i. Remove and replace damaged operational pressure transducer on Stages I, II and III.<br>NOTE: A low-pressure leakage check of the Stage I & II rocket motors shall be performed subsequent to the removal and replacement of the operational pressure transducer.<br>WARNING<br>It is required that a 60 PSI fail-safe blow out plug be installed downstream of the nitrogen pressure regulator in the supply line to prevent excessive pressure within the rocket motors during leakage testing. Excessive pressure would cause a personnel safety problem without high-pressure motor restraining facilities. | Tester Leakage (FSE 7)<br>D2-12195<br>Plug Kit, Nozzle Stage II, (FSE 16)<br>Plug Kit, Nozzle Stage I (FSE 126)<br>D2-12368 |
| 1.4.1.3 G&C SECTION REPAIR<br>Should the G&C section be damaged or not functioning as designed, it shall be returned to the Associate Contractor (Autonetics) for repair. | |

| ASSEMBLY OR CHECKOUT FUNCTION AND TECHNICAL REQUIREMENTS | RECOMMENDED EQUIPMENT OR DOCUMENT |
|---|---|
| 1.4.2 INSTALL REPLACEMENT COMPONENTS<br>The component which was removed in function E1.4.1 shall be replaced. The replacement part shall have been tested, and will be installed per the applicable functions in Section B. | Required Equipment and Procedures, see applicable functions of Sec. B |
| 1.4.2.1 MRB DISPOSITION<br>This function will consist of all operations required to determine disposition necessary for rejected airborne equipment. This function will be per established Air Force and Boeing Quality Control Procedures. Function E1.3 will support this function by performing fault isolation tests as directed by the MRB. Airborne equipment which is determined to be beyond the maintenance capability of Air Force Plant 77 shall be returned to its Associate Contractor in the form it was received at Air Force Plant 77 (ie., items below the end item received will not be returned individually, but the complete received item will be returned for repair). Reliability personnel will analyze all failures which require reliability reporting and will initiate corrective action as required for reliability improvement. | |

FUNCTION E1.4.2.1

| ASSEMBLY OR CHECKOUT FUNCTION AND TECHNICAL REQUIREMENTS | RECOMMENDED EQUIPMENT OR DOCUMENT |
|---|---|
| 1.4.3 PERFORM FUNCTIONAL TEST OF MISSILE | |
| The assembled missile shall receive functional testing to verify that sub-system performance satisfies the requirements of the Operational Missile Model Specification S-133-1000 (D2-13739). This functional test shall consist of the applicable sub-functions defined in functions B6.0, B8.0, and B12.0 | Required Equipment See functions B6.0, B8.0, and B12.0<br>D2-9520, Acceptance Functional Test Procedures SM-80 Missile, MAB-A/F Plant 77 |
| NOTE: If any raceway cable is replaced, conduct the dielectric test per section B7.6 | |
| 1.4.4 COMPLETE MISSILE ASSEMBLY | |
| Missile Assembly shall consist of required sub-functions defined in function B11.0 | Required Equipment See function B11.0 |
| 1.5 PREPARE FOR SHIPMENT | |
| Same requirements apply to this function as described in function B13.0 | Required Equipment See Function B13.0 |
| 1.6 RECORD DATA AND PREPARE FOR AIR FORCE ACCEPTANCE | |
| Same requirements apply to this function as described in function B14.0 | Required Equipment See function B14.0 |
| 1.7 SELL MISSILE TO AIR FORCE | |
| Same requirements apply to this function as described in Function B15.0. | |

FUNCTION E1.4.5

# MISSILE ASSEMBLY & CHECKOUT EQUIPMENT LIST

| IDENT. NO. | NOMENCLATURE | CLASS | LOCATION & FUNCTION | | | | | |
|---|---|---|---|---|---|---|---|---|
| | | | CPA | MAB | Missile & Motor Storage | Maint. Support Area | Missile Transfer Area | MISC |
| | The following equipment is required in addition to the Missile Assembly and Checkout Equipment listed in Section B. | | | | | | | |
| 7 | Tester, Leakage | FSE | | E1.4.1.2 | | | | |
| 12 | Container, Igniter, Stage II | FSE | | E1.4.1.2 | | | | |
| 15 | Indicator, Nozzle Deflection and Torque, Stage II | FSE | | E1.4.1.2 | | | | |
| 16 | Plug Kit, Nozzle, Stage II | FSE | | E1.4.1.2 | | | | |
| 31 | Kit, Installation and Removal, Ordnance Devices (Stage II) | FSE | | E1.4.1.2 | | | | |
| 108 | Container, Igniter S&A Device, Stage I, II & III | FSE | | E1.4.1.2 | | | | |
| 110 | Kit, Pyrogen Installation and Removal (Stage I) | FSE | | E1.4.1.2 | | | | |
| 123 | Indicator, Nozzle Deflection and Torque, Stage I | FSE | | E1.4.1.2 | | | | |
| 124 | Container, Shipping and Storage, Igniter, Stage I | FSE | | E1.4.1.2 | | | | |
| 126 | Plug Kit, Nozzle, Stage II | FSE | | E1.4.1.2 | | | | |
| 133 | Repair Kit, Base External Insulation, Stage I | FSE | | E1.4.1.2 | | | | |
| 202 | Tester, Nozzle Deflection and Torque, Stage III | FSE | | E1.4.1.2 | | | | |
| 236 | Kit, Base Insulation Repair Stage III | FSE | | E1.4.1.2 | | | | |
| 204 | Container, Igniter, Stage III | FSE | | E1.4.1.2 | | | | |
| 206 | Container Thrust Termination Switch | FSE | | E1.4.1.2 | | | | |

# MISSILE ASSEMBLY & CHECKOUT EQUIPMENT LIST

| IDENT. NO. | NOMENCLATURE | CLASS | LOCATION & FUNCTION | | | | | |
|---|---|---|---|---|---|---|---|---|
| | | | CPA | MAB | Missile & Motor Storage | Maint. Support Area | Missile Transfer Area | MISC |
| 201 | Kit, Installation & Removal, Ordnance Device (Stage III) | FSE | | E1.4.1.2 | | | | |
| Part of 0622 | Junction Box (CPA) NCU Test | ACO | E1.3.2.1 | | | | | |
| 7683 | Distribution Box, NCU Test, CPA | FSE | E1.3.2.1 | | | | | |
| 7726 | Cable Assembly, Interconnecting, G&C Test Position | FSE | E1.3.2.1 | | | | | |
| 7727 | Cable Assembly, Interconnecting, NCU Test Position | FSE | E1.3.2.1 | | | | | |
| 7728 | Power Supply Group, G&C Test, CPA | FSE | E1.3.2.1 | | | | | |
| 7729 | Power Supply Group, NCU Test, CPA | FSE | E1.3.2.1 | | | | | |
| 7741 | Hose Assembly, Cooling, G&C Section | FSE | E1.3.2.1 | | | | | |
| 12011(A) 12012(B) | Program Tapes, Accelerometer Test | FSE | E1.3.2.2 | | | | | R |
| 7745 | Bridle, Carriage Rocket Motor Truck | FSE | [illegible] | E1.4.12 | | | | |
| 12009(A) 12010(B) | Program Tapes, NCU Test | FSE | E1.3.2.2 | | | | | R |
| 30 | Repair Kit, Base External Insulation, Stage II | FSE | [illegible] | E1.4.1.2 | | | | |
| 12013 | Missile Checkout Console NS10 Tape, Model A | FSE | E1:3:2:2 | [illegible] | | | | |
| 12014 | Missile Checkout Cons. NS10 Tape Mod B | FSE | E1.3.2.2 | | | | | |
| 7715 | Adapter Cables, Test Set, Raceway Cables | FSE | E1.3.2.1 | | | | | |
| 7695 | Simulators, Airborne Components, Missile Test | FSE | | E1.3.1 | | | | |

# PLANT 77 ASSEMBLY & CHECKOUT EQUIPMENT LIST

| IDENT. NO. | NOMENCLATURE | CLASS | LOCATION & FUNCTION | | | | | |
|---|---|---|---|---|---|---|---|---|
| | | | CPA | MAB | Missile & Motor Storage | Maint. Support Area | Missile Transfer Area | MISC |
| 10163 | Gage, Nozzle Alignment, Stage I | FSE | | E1.4.1.2 | | | | |
| ~~1[illegible]~~ | ~~Check Plate, Nozzle Alignment, Stage I~~ | ~~[illegible]~~ | | ~~[illegible]~~ | | | | |
| 10165 | Gage, Nozzle Alignment, Stage II | FSE | | E1.4.1.2 | | | | |
| ~~1[illegible]~~ | ~~Check Plate, Nozzle Alignment, Stage II~~ | ~~[illegible]~~ | | ~~[illegible]~~ | | | | |
| 10167 | Gage, Nozzle Alignment, Stage III | FSE | | E1.4.1.2 | | | | |
| ~~1[illegible]~~ | ~~Check Plate, Nozzle Alignment, Stage III~~ | ~~[illegible]~~ | | ~~[illegible]~~ | | | | |
| 7748 | Test Adapter Stage I, Model P70B | FSE | | E1.3.2.1 | | | | |
| ~~P/N~~ [illegible]114 | Spreader Assy, Nozzle [illegible] | FSE | | E1.4.1.2 | | | | |
| P/N T416090 | Turnbuckle, YZ Cable | FSE | | E1.4.1.2 | | | | |
| 7653 | Winch, Portable-Rocket Motor Transfer | FSE | | | E1.4.1.2 | | | |
| 7745 | Bridle, Carriage 1st Stage (Rocket Motor Truck) | FSE | | | E1.4.1.2 | | | |

MISSILE ASSEMBLY & CHECKOUT EQUIPMENT

| IDENT. NO. | NOMENCLATURE | CLASS | LOCATION & FUNCTION NUMBER | | | | | |
|---|---|---|---|---|---|---|---|---|
| | | | CPA | MAB | ORDNANCE PROCESSING | MISSILE & MOTOR STORAGE | MISSILE TRANSFER AREA | MISC |
| (Part of ACO 0622) | Junction Box (CPA) G&C Test | ACO | E1.3.2.2 | | | | | |
| ACO 0622 | Test Group, G&C, C-89 | ACO | E1.3.2.2 | | | | | |
| ACO 0624 | Test Set, Programming, C-91 | ACO | E1.3.2.2 | | | | | |
| ACO 0667 | Power Supply, DC Portable, C-95 | ACO | E1.3.2.2 | | | | | |
| ACO 9278 | Liquid Cooling Equipment, Ground Guidance and Control | ACO | E1.3.2.2 | | | | | |
| ACO 402 | Cable Tester | SFC/OH | E1.3.2.1 | | | | | |
| ACO 456 | Table, Work-Electronid Test | SFC/OH | E1.3.2.2 | | | | | |
| ACO 459 | Container, Raceway Cable, Stage I | SFC/OH | E1.3.2.1 | | | | | |
| ACO 458 | Container, Raceway Cable, Stage II | SFC/OH | E1.3.2.1 | | | | | |
| ACO 457 | Container, Raceway Cable, Stage | SFC/OH | E1.3.2.1 | | | | | |
| ACO 273 | Recording Station | SFC/OH | E1.3.2.1 | | | | | |
| ACO 10729 | Program Tapes G&C Test NS10P (Mod A) | ACO | E1.3.2.2 | | | | | |
| ACO 12008 | Program Tapes G&C Test NS10P (Mod B) | ACO | E1.3.2.2 | | | | | |
| ACO 10735 | Program Tapes G&C Test NS10Q (Mod A) | ACO | E1.3.2.2 | | | | | |
| ACO 10736 | Program Tapes G&C Test NS10Q (Mod B) | ACO | E1.3.2.2 | | | | | |
| ACO 749 | Bimetal Thermometer | ACO/OH | E1.3.2.2 | | | | | |
| ACO 753 | Pressure Sensor | ACO/OH | E1.3.2.2 | | | | | |
| ACO 754 | Flow Meter | ACO/OH | E1.3.2.2 | | | | | |

R
R
R

SECTION E - REQUIRED DOCUMENTS

| DOC. NO. | TITLE | SECTION |
|---|---|---|
| D2-9520 | SM-80 Functional Test Procedures - MAB - Plant 77 | E1.3.2 |
| D2-9555 | Handbook of Operating Procedures - Engine Handling Harness and Horizontal Restraint and Bracket Assembly Sets | E1.4.1.2 |
| D2-7295 | Insulation Repair Procedures | E1.4.1.2 |
| D2-10885-3 | Tool Repair and Maintenance Plan | - |
| D2-10976 | Adapter Cables, Test Set - Raceway Cables Operation and Maintenance | E1.3.2.1 |
| D2-11087 | Operating and Maintenance - AVCOAT Repair Kit | E1.4.1 |
| D2-11304 | Functional Test Procedures - Angular Accelerometer, P68A | E1.3.2 |
| D2-11305 | Functional Test Procedures - Angular Accelerometer, P68B | E1.3.2 |
| D2-11306 | Functional Test Procedures, NCU, Stage I, P70A | E1.3.2 |
| D2-11307 | Functional Test Procedures, NCU, Stage I, P70B | E1.3.2 |
| D2-11308 | Functional Test Procedures, NCU, Stage II, P71A | E1.3.2 |
| D2-11309 | Functional Test Procedures, NCU, Stage II, P71B | E1.3.2 |
| D2-11310 | Functional Test Procedures, NCU, Stage III, P72A | E1.3.2 |
| D2-11311 | Functional Test Procedures, NCU, Stage III, P72B | E1.3.2 |
| D2-11312 | Fault Isolation Test Procedures - Raceway Cable Assembly, Stage I, II and III | E1.3.2 |
| D2-11323 | Functional Test Procedures, Guidance Section, NS10-P & NS10-Q | E1.3.2 R R |
| D2-11762 | Operation Instructions, Kit, Installation and Removal, Ordnance Device (Stage III) | E1.4.1.2 |
| D2-11772 | Operation and Maintenance Instructions, Tester, Nozzle Deflection and Torque, M-57 Rocket Motor | E1.4.1.2 |
| D2-11775 | Operating Instructions Repair Kit, Base External Insulation, Stage III | E1.4.1.2 |

SECTION E - REQUIRED DOCUMENTS (Cont)

| DOC. NO. | TITLE | SECTION |
|---|---|---|
| D2-11776 | Operation and Maintenance Instruction, Rocket Motor M57 | E1.4.1.2 |
| D2-12195 | Operation and Maintenance Procedures for Leakage Tester | E1.4.1.2 |
| D2-12208 | Operation and Maintenance-Indicator, Nozzle Deflection and Torque, Stage II | E1.4.1.2 |
| D2-12216 | M56 Rocket Motor, Handling, Operation and Maintenance Instructions | E1.4.1.2 |
| D2-12363 | Igniter Holding Tool Installation Kit, Operation and Maintenance Instructions (WS-133 Stage I) | E1.4.1.2 |
| D2-12365 | Nozzle Deflection and Torque Test-Preassembly Test, Calibration/Certification, Operation and Maintenance Instructions (WS-133 Stage I) | E1.4.1.2 |
| ~~D2-12367~~ | ~~Base External Insulation Repair Kit Operation and Maintenance Instructions (WS-133 Stage I)~~ | ~~E1.4.1.2~~ |
| D2-12368 | M55 Rocket Motor Maintenance and Repair Instructions | E1.4.1.2 |
| D2-13764 | G&C Section Purging and Drying Procedures | E1.3.2.2 |
| D2-13849 | Fault Isolation Procedures, Assembled Missile, Plant 77 | E1.3.1 |
| AA0304-072 | NCU Sealing Specification | E1.3.2.1 |
| EM 2358 | Operation and Maintenance - Test Set, Programming C91 A/N | E1.3.2 |
| D2-13510 | Operation and Maintenance Instructions - Nozzle Pressure Test Maintenance Kit | E1.4.1.2 |
| D2-10941 | Operation & Maintenance - Bridle-Carriage 1st Stage | E1.4.1.2 |

## SECTION E REQUIRED DRAWINGS

| DRAWING NO. | TITLE | SECTION |
|---|---|---|
| 25-27596 | Instl. Body Sec. Central & Battery, Stage III | E1.3.2.1 |
| 25-27597 | Flight Control Unit & Battery Pwr Supply Instl, Stage I | E1.3.2.1 |
| 25-27598 | Instl.-SE 13 Battery & Nozzle Control Unit, Stage II | E1.3.2.1 |
| 85010-201 | Body Section, Guided Missile - Central (VAFB, GTM 010, GTM 077) | E1.4.1.3 |
| 85011-201 | Body Section, Guided Missile-Central (MAFB) | E1.4.1.3 |

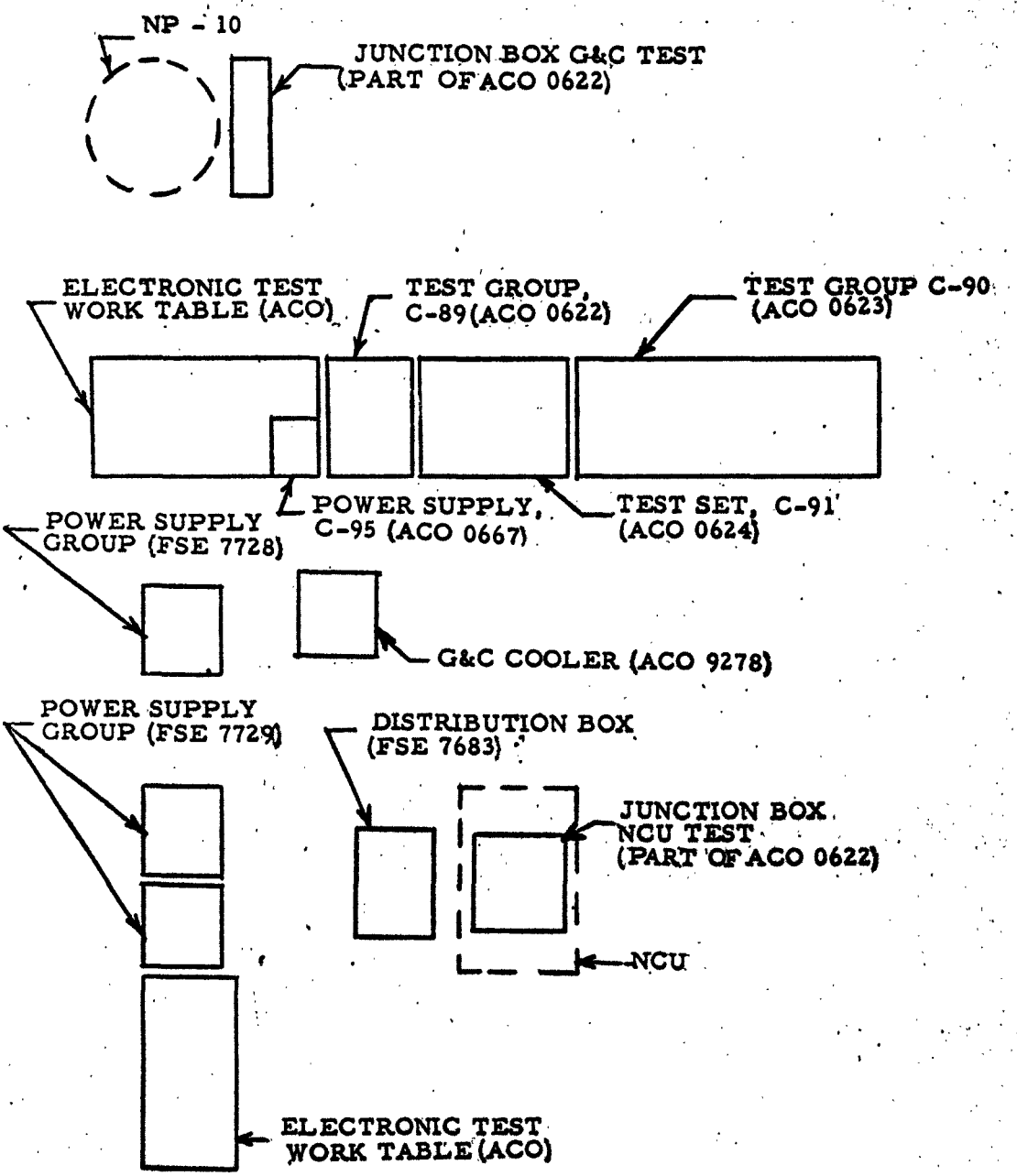


INTEGRATED TEST AREA COMPONENT PROCESSING BUILDING
FIGURE I - E

# INTEGRATED TEST AREA COMPONENT PROCESSING BLDG.

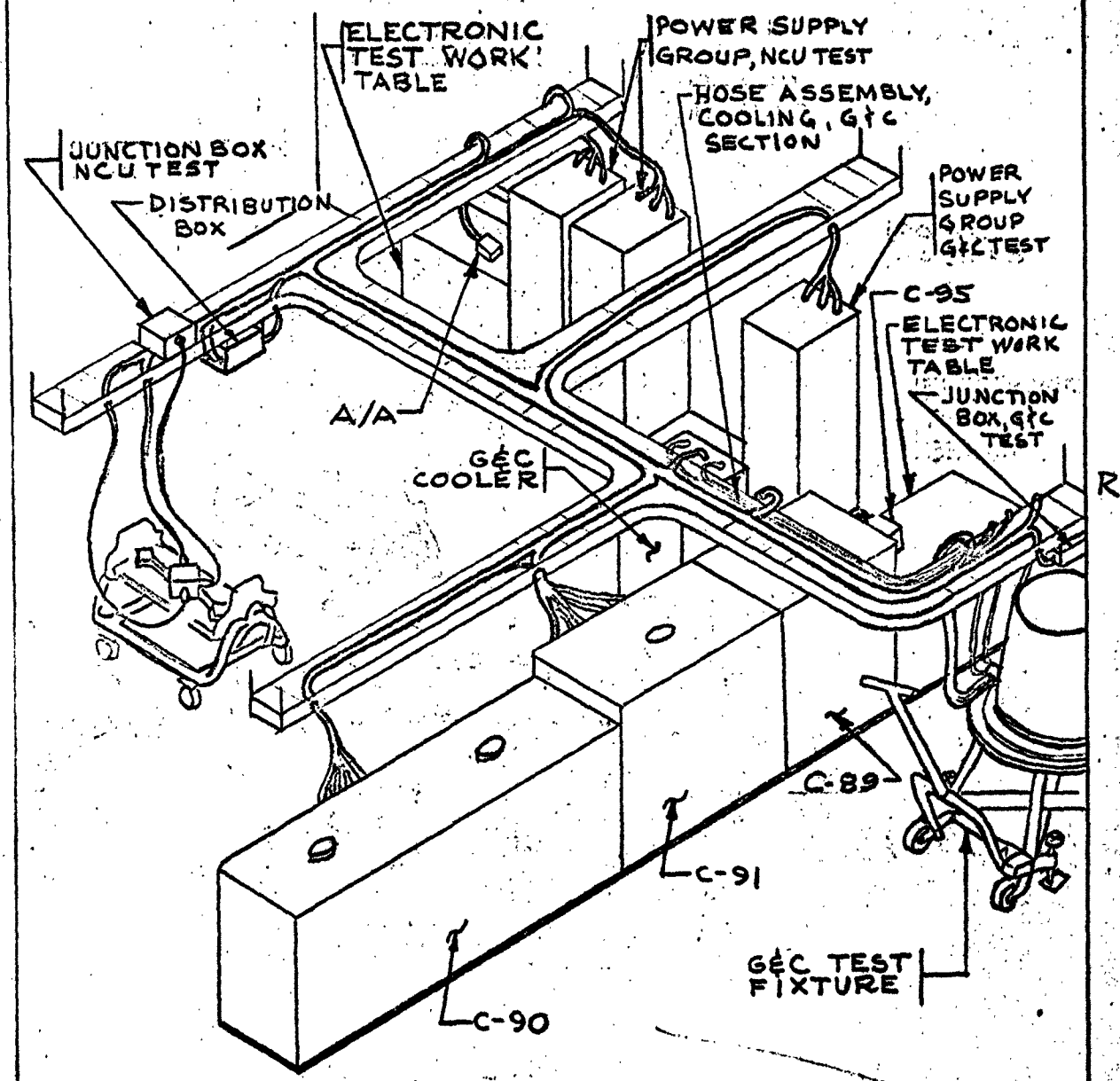


FIGURE 2-E

BOEING AIRPLANE COMPANY

NUMBER D2-11162 MODEL NO. WS-133A

TITLE SUBSTITUTE FIGURE "A" FORMS - FACTORY SUPPORT EQUIPMENT (FSE)

PREPARED BY Plant 77 Requirements Unit 5-15-61

SUPERVISED BY D.A. Severide 5/16/61

APPROVED BY D.C. Borleau 5/17

Approved by W.H. Charlet (DATE) 9-11-61

5-78200-5120-68145

CHARGE NUMBER

REVISED 11-15-61 8-31-61

MAY 15 1961

SECTION TITLE PAGE

VOL. | NO. D2-11162

SEC. APP. I | PAGE 1

BAC 4131 B

2-7000

# ACTIVE-CHANGED PAGE

| ACTIVE | | | CHANGED | | | | |
|---|---|---|---|---|---|---|---|
| SECTION | PAGE | DATE | SECTION | PAGE REVISED | PAGE ADDED | PAGE DELETED | DATE |
| APP I | 1 | 11-15-61 | APP I | COMPLETE | | | 11-15-61 |
| | 2 | 9-15-63 | | REVISION | | | |
| | 3 | 9-15-63 | | | 91 | 29a | |
| | 4 | 8-17-62 | | | | 37a | |
| | 5 | 11-15-61 | | | | 43a | |
| | 6 | 11-15-61 | | | | | |
| | 7 | 11-15-61 | APP I | | 109 | | 11-15-61 |
| | 8 | DELETED | | | | | |
| | 9 | DELETED | APP I | 2 | 53a | 109 | 2-1-62 |
| | 10 | 11-15-61 | | 3 | 53b | | |
| | 11 | 11-15-61 | | 12 | 53c | | |
| | 12 | 8-17-62 | | 15 | 53d | | |
| | 13 | 8-17-62 | | 16 | 53e | | |
| | 14 | 11-15-61 | | 17 | 53f | | |
| | 15 | 2-1-62 | | 18 | 53g | | |
| | 16 | 2-1-62 | | 25 | 96a | | |
| | 17 | 2-1-62 | | 27 | 96b | | |
| | 18 | 2-1-62 | | 29 | 96c | | |
| | 19 | 11-15-61 | | 31 | | | |
| | 20 | | | 37 | | | |
| | 21 | | | 39 | | | |
| | 22 | | | 40 | | | |
| | 23 | | | 44 | | | |
| | 24 | 11-15-61 | | 46 | | | |
| | 25 | 2-1-62 | | 47 | | | |
| | 26 | 11-15-61 | | 64 | | | |
| | 27 | 2-1-62 | | 74 | | | |
| | 28 | 11-15-61 | | 77 | | | |
| | 29 | 2-1-62 | | 78 | | | |
| | 30 | 11-15-61 | | 80 | | | |
| | 31 | 2-1-62 | | 82 | | | |
| | 32 | 11-15-61 | | 83 | | | |
| | 33 | 11-15-61 | | 84 | | | |
| | 34 | 6-1-62 | | 85 | | | |
| | 35 | 11-15-62 | | 86 | | | |
| | 36 | 11-15-61 | | 87 | | | |
| | 37 | 2-11-63 | | 90 | | | |
| | 38 | 10-22-61 | | 93 | | | |
| | 39 | 10-22-62 | | 94 | | | |
| | 40 | 2-1-62 | APP I | 107 | | | |
| | 41 | 11-15-61 | | 108 | | | 2-1-62 |
| | 42 | 11-15-61 | APP I | 2 | 53d-1 | | 6-1-62 |
| | | | | 3 | 53d-2 | | |
| | | | | 34 | 53d-3 | | |
| | | | | 44 | 53d-4 | | |
| | | | | 53 | 53d-5 | | |
| | | | | 53d | 53d-6 | | |
| | | | | 53e | | | |
| | | | | 53f | 96d | | |
| | | | | 96a | | | |
| | | | | 96b | | | 6-1-62 |

| ACTIVE | | | CHANGED | | | | |
|---|---|---|---|---|---|---|---|
| SECTION | PAGE | DATE | SECTION | PAGE REVISED | PAGE ADDED | PAGE DELETED | DATE |
| APP I | 43 | 11-15-61 | APP I | 53d | | | 7-13-62 |
| | 44 | 6-1-62 | | 53d1 | | | |
| | 45 | 10-22-61 | | 53d2 | | | |
| | 46 | 10-22-62 | | 53d3 | | | |
| | 47 | 2-1-62 | | 53d4 | | | |
| | 48 | 11-15-61 | | 53d5 | | | |
| | 49 | | | 53d6 | | | |
| | 50 | | APP I | | 53d7 | | 7-13-62 |
| | 51 | | | 2 | | | 8-17-62 |
| | 52 | 11-15-61 | | 3 | | | |
| | 53 | 6-1-62 | | 4 | | | |
| | 53a | DELETED | | 12 | | | |
| | 53b | DELETED | | 13 | | | |
| | 53c | DELETED | | 53b | | | |
| | 53d | 9-15-63 | | 53c | | | |
| | 53d-1 | | | 96a | | | |
| | 53d-2 | | | 96b | | | |
| | 53d-3 | | | 96c | | | |
| | 53d-4 | | | | 109 | | |
| | 53d-5 | | | | 110 | | |
| | 53d-6 | 4-15-63 | | | 111 | | |
| | 53d-7 | DELETED | | | 112 | | 8-17-62 |
| | 53e | 1-11-63 | APP I | 8 | | 8 | 9-14-62 |
| | 53f | 1-11-63 | | | | 9 | |
| | 53g | DELETED | | 53d | | 53a | |
| | 54 | 11-15-61 | | 53d-1 | | 53b | |
| | 55 | | | 53d-2 | | 53c | |
| | 56 | | | 53d-3 | | 58 | |
| | 57 | 11-15-61 | | 53d-4 | | 59 | |
| | 58 | 10-22-62 | | 53d-5 | | | |
| | 59 | 10-22-62 | | 53d-6 | | | |
| | 60 | 11-15-61 | APP I | | 53d-7 | 53d-7 | 9-14-62 |
| | 61 | | APP I | 2 | | | 10-22-62 |
| | 62 | | | 3 | | | |
| | 63 | 11-15-61 | | 38 | | | |
| | 64 | 2-1-62 | | 39 | | | |
| | 65 | 11-15-61 | | 45 | | | |
| | 66 | | | 46 | | | |
| | 67 | | | | 58 | | |
| | 68 | | | | 59 | | |
| | 69 | 11-15-61 | | | 96d | | |
| | 70 | 9-15-63 | | | 96e | | |
| | 71 | 11-15-61 | APP I | | 115 | | |
| | | | | | 116 | | |
| | | | | | 117 | | |
| | | | | | 118 | | 10-22-62 |

See revision description page, preceding Document Table of Contents

REVISED 9-15-63



U3 6286 1000 (WAS BAC 4131 C)

# ACTIVE-CHANGED PAGE

| ACTIVE | | | CHANGED | | | | | ACTIVE | | | CHANGED | | | | |
|---|---|---|---|---|---|---|---|---|---|---|---|---|---|---|---|
| SECTION | PAGE | DATE | SECTION | PAGE REVISED | PAGE ADDED | PAGE DELETED | DATE | SECTION | PAGE | DATE | SECTION | PAGE REVISED | PAGE ADDED | PAGE DELETED | DATE |
| APP I | 72 | 11-15-61 | APP I | 2 | | | 11-26-62 | APP I | 109 | 8-17-62 | | | | | |
| | 73 | 11-15-61 | | 3 | | 53g | | | 110 | 8-17-62 | | | | | |
| | 74 | 2-1-62 | | | 119 | | | | 111 | 8-17-62 | | | | | |
| | 75 | 11-15-61 | | | 120 | | | | 112 | 8-17-62 | | | | | |
| | 76 | 11-15-61 | APP I | | | | 11-26-62 | | 113 | 1-11-63 | | | | | |
| | 77 | 1-11-63 | APP I | 2 | | | 1-11-63 | | 114 | 10-22-62 | | | | | |
| | 78 | 2-1-62 | | 3 | | | | | 115 | 1-11-63 | | | | | |
| | 79 | 11-15-61 | | 37 | | | | | 116 | 10-22-62 | | | | | |
| | 80 | 2-1-62 | | | | | | | 117 | | | | | | |
| | 81 | 11-15-61 | | | | | | APP I | 118 | 10-22-62 | | | | | |
| | 82 | 2-1-62 | | 53e | | | | | 119 | 11-26-62 | | | | | |
| | 83 | | | 53f | | | | | 120 | 11-26-62 | | | | | |
| | 84 | | | 77 | | | | | | | | | | | |
| | 85 | | APP I | 113 | | | 1-11-63 | | | | | | | | |
| | 86 | | | 115 | | | | | | | | | | | |
| | 87 | 2-1-62 | APP I | 2 | | | 4-15-63 | | | | | | | | |
| | 88 | 11-15-61 | | 3 | | | | | | | | | | | |
| | 89 | 11-15-61 | | 53d | | | | | | | | | | | |
| | 90 | 2-1-62 | | 53d-1 | | | | | | | | | | | |
| | 91 | 11-15-61 | | 53d-2 | | | | | | | | | | | |
| | 92 | 11-15-61 | | 53d-3 | | | | | | | | | | | |
| | 93 | 2-1-62 | | 53d-4 | | | | | | | | | | | |
| | 94 | 2-1-62 | | 53d-5 | | | | | | | | | | | |
| | 95 | 11-15-61 | | 53d-6 | | | | | | | | | | | |
| | 96 | 11-15-61 | | | | | | | | | | | | | |
| | 96a | 8-17-62 | | | | | | | | | | | | | |
| | 96b | 8-17-62 | | | | | | | | | | | | | |
| | 96c | 8-17-62 | | | | | | | | | | | | | |
| | 96d | 6-1-62 | | | | | | | | | | | | | |
| | 96e | 10-22-62 | | | | | | | | | | | | | |
| | 96f | 10-22-62 | | | | | | | | | | | | | |
| | 97 | 11-15-61 | | | | | | | | | | | | | |
| | 98 | | | | | | | | | | | | | | |
| | 99 | | | | | | | | | | | | | | |
| | 100 | | | | | | | | | | | | | | |
| | 101 | | | | | | | | | | | | | | |
| | 102 | | | | | | | | | | | | | | |
| | 103 | | | | | | | | | | | | | | |
| | 104 | | | | | | | | | | | | | | |
| | 105 | | | | | | | | | | | | | | |
| | 106 | 11-15-61 | | | | | | | | | | | | | |
| APP I | 107 | 2-1-62 | | | | | | | | | | | | | |
| | 108 | 2-1-62 | | | | | | | | | | | | | |

See revision description page, preceding Document Table of Contents

REVISED 4-15-63



US 4200 1000

273

## APPENDIX I

The following Substitute Figure "A" forms for Factory Support Equipment are included to present the items presently programmed for incorporation into Air Force Exhibit 60-59. These Substitute Figure "A" will be deleted from this document upon incorporation into the AF Exhibit 60-59.

| TYPE OF LIST<br>FACTORY SUPPORT EQUIPMENT | DATE<br>9-21-60 |
|---|---|
| Model Designation and Name of End Item<br>H & D SM-80 WEAPON SYSTEM | Revision No. and Date 8-24-1 |
| Contractor<br>BAC | |
| Contract No.<br>Af04 (647) - 580 | |
| Item No.<br>7600 | |
| Nomenclature<br>Cover, End-G&C Section | |
| Quantity | |
| Total On Order | |
| Estimated Production Lead Time | |
| List Number | |
| Manufacturer's Part Number 25-21693 | R |
| Specification No. | |
| Specification Date | |

**Description**

Function

1. A means of providing dust protection to the forward end of the G & C section, after it is installed on the missile, is required.
2. Functions requiring this capability are: B3.1, B10.1 and on. R

R Description

A light weight fabric cover which fastens over the forward end of the G & C section. Cover will be padded in areas which will contact the G & C section components. The cover will be provided with an access opening to the R/V cable.

DEPT. RESP. - Manufacturing

| ENGINEERING | BASE INSTALLATIONS | MANUFACTURING |
|---|---|---|
| | 7-25-61 | |

Form 2-2052-100-14

11-15-61
8-31-61

| | |
|---|---|
| TYPE OF LIST<br>FACTORY SUPPORT EQUIPMENT | DATE<br>3-15-61 |
| Model Designation and Name of End Item<br>SM-80 WEAPON SYSTEM | Revision No. and Date 6-13-61 |

Contractor
BOEING

Contract No.
AF 04(647)-580

Item No.
7613

Nomenclature
Adapter, Joining, Missile Interstage I-II

Quantity

Total On Order

Estimated Production Lead Time

List Number

Manufacturer's Part Number 25-21628

Specification No.

Specification Date

Description

Function

1. A requirement exists for a means to support and position the R.H. aft panel and aft adapter ring of Interstage I-II on the assembly rails for joining to the 1st Stage engine.

2. Functions in D2-11162 requiring this capability are: B7.4

Description

The adapter consists of a circular spoke-type structural assembly and will be used in conjunction with the Dolly, Positioning-Final Assembly (FSE 7708). The adapter's central hub shall be compatible with the dolly's main shaft on which it is supported.

(continued page 2)

DEPT. RESP. - Manufacturing

| ENGINEERING | BASE INSTALLATIONS | MANUFACTURING |
|---|---|---|
| | | |

R R

Form 2-2052-100-14

11-15-61
8-31-61

FACTORY SUPPORT EQUIPMENT

ITEM NO. 7613

NOMENCLATURE: Adapter, Joining, Missile Interstage I-II

Description: Continued

The joining adapter supports the aft adapter ring through the skin attachment holes. This aft adapter ring is bolted to the joining adapter on a workbench after which both are lifted into place by using a swivel hook provided on the joining adapter. The joining adapter shall be made of formed aluminum members bolted to a welded steel tube frame.

R

| TYPE OF LIST | DATE |
|---|---|
| FACTORY SUPPORT EQUIPMENT | 3-15-61 |
| Model Designation and Name of End Item<br>H&D SM-80 WEAPON SYSTEM | Revision No. and Date<br>6-14-61 |

Contractor
BOEING

Contract No.
AF04(647)-589

Item No.
7619

Nomenclature
Fixture, Support-Umbilical Cabling, MAB

Quantity

Total On Order

Estimated Production Lead Time

List Number

Manufacturer's Part Number 25-21660

Specification No.

Specification Date

Description
Function
1. A means must be provided to support the G&C and Skirt Umbilical cables in an overhead suspended position.
2. Functions in D2-11162 requiring this capability are: B6.1, B8.1, B8.2, B10.1, B12.1

Description
Supports shall be provided for each of the following:
1) G&C Umbilical Cabling
2) Skirt Umbilical Cabling
The supports shall be suitably mounted near the Scaffolding-Missile Access (FSE 7630). Supports shall consist of a column type stand and a swivel boom, supporting cabling in an overhead suspended position.

(cont. page 2)

DEPT. RESP. - Manufacturing

| ENGINEERING | BASE INSTALLATIONS | MANUFACTURING |
|---|---|---|
| | | |

11-15-61
8-31-61

FACTORY SUPPORT EQUIPMENT

ITEM NO. 7619

NOMENCLATURE: Fixture, Support-Umbilical Cabling, MAB

Description: (continued)

R. Bend radii of supports shall be in conformance with minimum bend radii requirements of cable assemblies. Suitable hoisting provisions shall be provided for ease of positioning umbilical cabling at test position.

FACTORY SUPPORT EQUIPMENT

# 7620

DELETED
NO REQUIREMENT
WING I

DELETED
SEE PAGE 12

FACTORY SUPPORT EQUIPMENT

# 7625

CANCELLED

6Le

R

| TYPE OF LIST | DATE |
|---|---|
| FACTORY SUPPORT EQUIPMENT | 3-15-61 |
| Model Designation and Name of End Item<br>H&D SM-80 WEAPON SYSTEM | Revision No. and Date<br>1-23-62 |

Contractor

BOEING

Contract No.
AF04(647)-580

Item No.
7628

Nomenclature

Rails - Missile Joining

Quantity

Total On Order

Estimated Production Lead Time

List Number

Manufacturer's Part Number 25-21643

Specification No.

Specification Date

Description

Function:

1. A requirement exists for a means of supporting the missile components while assembling and testing the missile.
2. Functions in D2-11162 requiring this capability are: B4.2, B5.1, B7.1, B13.1, B13.2, B16.1, B16.2.

R

Description

The rails consist of two guide tracks spaced at the proper height and width with structural braces and brackets to accommodate the various sections of the missile and respective assembly equipment. They will include provisions for grounding; tie-down, attachment of optical devices and transferring engine stages, and the entire missile. The rails will include:

(see page 2)

DEPT. RESP. - Manufacturing

| ENGINEERING | BASE INSTALLATIONS | MANUFACTURING |
|---|---|---|
| [signature] | [signature] | [signature] |

Form 2-2052-100-14

2-1-62

Item No. 7628

Nomenclature: Rails - Missile Joining

Description: (continued)

(1) Wheel Chocks
(2) Bridge rails fittings for highway transporters
(3) Winches for Engine and Missile Transfers
(4) Fixed Extension of rails for MCAT Transfers
R(5) Provisions for attachment of Fig. A 7697.

186

R

| TYPE OF LIST | DATE |
|---|---|
| FACTORY SUPPORT EQUIPMENT | 3-15-61 |
| Model Designation and Name of End Item<br>H&D SM-80 WEAPON SYSTEM | Revision No. and Date<br>1-23-62 |

Contractor
BOEING

Contract No.
AF04(647)-580

Item No.
7629

Nomenclature
Rails - Storage, Engine and Missile

Quantity

Total On Order

Estimated Production Lead Time

List Number

Manufacturer's Part Number 25-21678

Specification No.

Specification Date

Description
Function
1. A requirement exists for supporting Stage I, II & III engines and completed missiles on the engine harnesses in the storage building.
2. Functions in D2-11162 requiring this capability are: B2.2, B4.2, B13.6, B13.7, B13.9, B13.10, B16.6, B16.7, B16.9, B16.10.

R

Description
The rails consist of two guide tracks spaced at the proper height and width with structural braces and brackets to accommodate various sections of the missiles. They will include provisions for grounding, tie-down, attachment of optical devices, and transferring engine stages and the entire missile. The rails will include: (1) Wheel Chocks; (2) Swing-out extension of rails for MCAT; (3) Bridge rail fittings for Highway Transporters; (4) Winches for engine and missile transfers. (5) Provisions for attachment of Fig. A 7697.

R

Form 2-2052-100-14

DEPT. RESP. - Manufacturing

| ENGINEERING | BASE INSTALLATIONS | MANUFACTURING |
|---|---|---|
| [signature] | [signature] | [signature] |

2-1-62

282

| TYPE OF LIST | DATE |
|---|---|
| FACTORY SUPPORT EQUIPMENT | 3-15-61 |
| Model Designation and Name of End Item<br>H & D SM-80 WEAPON SYSTEM | Revision No. and Date<br>8-1-61 |

**Contractor**
BAC

**Contract No.**
AF04 (647) - 580

**Item No.**
7630

**Nomenclature**
Scaffolding & Missile Access

**Quantity**

**Total On Order**

**Estimated Production Lead Time**

**List Number**

**Manufacturer's Part Number** 25-21644

**Specification No.**

**Specification Date**

**Description**

Function

1. A requirement exists for a means to provide working access to the entire missile.

2. Functions in D2-11162 requiring this capability are: B3.2, B5.1, B7.1.

Description

This scaffolding shall consist of platforms which cover the working area between the assembly rails and between rails and assembly dock.

(continued - page 2)

Form 2-2052-100-14

DEPT. RESP. - ENGINEERING | BASE INSTALLATIONS | MANUFACTURING

11-15-61 2-1-62
8-31-61

383



Item No. 7630

Nomenclature: Scaffolding - Missile Access

Description (continued)
The platforms between the rails will be removable. The platforms between the rails and the assembly dock will be hinged on the assembly dock side for stowage when not in use.

| TYPE OF LIST | DATE |
|---|---|
| FACTORY SUPPORT EQUIPMENT | 3-15-61 |
| Model Designation and Name of End Item: H&D SM-80 WEAPON SYSTEM | Revision No. and Date: 6-15-61 |

Contractor

Contract No.
AF04(647)-580

Item No. 7631

Nomenclature
Sling - Adapter Ring, Missile Base

Quantity

Total On Order

Estimated Production Lead Time

List Number

Manufacturer's Part Number 25-21682

Specification No.

Specification Date

**Description**

**Function**

1. A requirement exists for a means to hold the missile base adapter ring while removing from shipping container and joining to the missile.
2. Functions in D2-11162 requiring this capability are: B11.8

**Description**

The sling consists of a spreader bar assembly with drop cables, which bolt onto 2 ears provided on Base Adapter Ring by means of shackles.

DEPT. RESP. - Manufacturing

| ENGINEERING | BASE INSTALLATIONS | MANUFACTURING |
|---|---|---|
| | | |

11-15-61
8-31-61

| DEPT. RESP. - Manufacturing | |
|---|---|
| ENGINEERING | BASE INSTALLATIONS / MANUFACTURING |

| | |
|---|---|
| TYPE OF LIST<br>FACTORY SUPPORT EQUIPMENT | DATE<br>3-15-61 |
| Model Designation and Name of End Item<br>H & D SM-80 WEAPON SYSTEM | Revision No. and Date<br>7-21-61 |
| Contractor<br>BAC | |
| Contract No.<br>AF04 (647) - 580 | |
| Item No.<br>7632 | |
| Nomenclature<br>Sling-Horizontal Restraint Ring, Engine, Stage I, II & III | |
| Quantity | |
| Total On Order | |
| Estimated Production Lead Time | |
| List Number | |
| Manufacturer's Part Number 25-21681 | |
| Specification No. | |
| Specification Date | |

**Description**

Function

1. A requirement exists for a means of holding the horizontal restraint ring while removing or installing from the engine.

2. Functions in D2-11162 requiring this capability are: B4.2

Description

Sling shall consist of a spreader bar assembly with drop cables. which can be adjusted to suit individual restraint rings.

Form 2-2052-100-14

11-15-61
8-31-61

| TYPE OF LIST | DATE |
|---|---|
| FACTORY SUPPORT EQUIPMENT | 3-15-61 |
| Model Designation and Name of End Item: SM-80 WEAPON SYSTEM | Revision No. and Date: 7-7-61 |

Contractor
BOEING

Contract No.
AF04(647)-580

Item No.
7634

Nomenclature
Sling and Harness-Guidance and Control Section

Quantity

Total On Order

Estimated Production Lead Time

List Number

Manufacturer's Part Number 25-21601

Specification No.

Specification Date

Description

Function

1. A requirement exists for a means to remove the Guidance and Control Section from its shipping container; to hold, support and rotate the section during installation in the C&C positioning & handling dolly. (FSE 7707)

R

2. Functions in D2-11162 requiring this capability are: B9.1

Description

(Continued page 2)

DEPT. RESP. - Manufacturing Engineering

| ENGINEERING | BASE INSTALLATIONS | MANUFACTURING |
|---|---|---|
| | | |

11-15-61
8-31-61

FACTORY SUPPORT EQUIPMENT

ITEM NO. 7634

Nomenclature: Sling and Harness-Guidance and Control Section

Description:

R Sling and Harness consist of the following:

1) A harnessing assembly nesting the structure of the G&C section. This assembly consists of 2 solid end rings spaced by a suitable structural frame. The forward ring fastens to the front end of the G&C Section by means of 4 threaded indexing pins. Special nut-plates in the G&C Section are provided for this purpose. The aft ring nests the aft structure of the G&C Section, supporting it on rubber-like padding.

2) A sling assembly consisting of a welded pipe structure which fastens to harness ring assembly by means of quick-disconnect pins through the indexing mechanism.

3) An indexing mechanism attached permanently to harness assembly and connecting it to sling assembly. One part of this indexing mechanism is a free acting bearing, whereas, the other part consists of a worm and geardrive. Worm gear shall be splinkeyed to harness shaft. Worm gear drive shall be ratchet actuated. Lock pins shall be provided in both parts of indexing mechanism to locate horizontal and vertical centerline position of G&C Section during sling usage.

11-15-61
8-31-61

| TYPE OF LIST | DATE |
|---|---|
| FACTORY SUPPORT EQUIPMENT | 3-15-61 |
| Model Designation and Name of End Item<br>H & D SM-80 WEAPON SYSTEM | Revision No. and Date<br>7-21-61 |

**Contractor**
BAC

**Contract No.**
AF04 (647) - 580

**Item No.**
7636

**Nomenclature**
Sling & Harness - Engine Skirt

**Quantity**

**Total On Order**

**Estimated Production Lead Time**

**List Number**

**Manufacturer's Part Number** 25-21638

**Specification No.**

**Specification Date**

**Description**

Function

1. A requirement exists for a means of holding the skirt, either the right or left hand half or the joined skirt halves, while handling and assembling to the 1st stage engine.

2. Functions in D2-11162 requiring this capability are: B7.3

Description

The sling and harness consists of an adjustable spreader bar and a stiffening framework to attach to skirt. The sling will be capable of spreading or joining the two halves of the skirt to clear the nozzles during assembly operations.

Form 2-2052-100-14

DEPT. RESP. - Manufacturing

| ENGINEERING | BASE INSTALLATIONS | MANUFACTURING |
|---|---|---|
| | | |

R

11-15-61
8-31-61

| TYPE OF LIST | DATE |
|---|---|
| FACTORY SUPPORT EQUIPMENT | 4-1-61 |
| Model Designation and Name of End Item<br>H _ D SM-80 WEAPON SYSTEM | Revision No. and Date<br>8-1-61 |

**Contractor**

BAC

**Contract No.**
AF04 (647) - 580

**Item No.**
7641

**Nomenclature**

Harness - R. H. Panel, Missile Interstage I - II

**Quantity**

**Total On Order**

**Estimated Production Lead Time**

**List Number**

**Manufacturer's Part Number** 25-21630

**Specification No.**

**Specification Date**

**Description**

Function

1. A requirement exists for a means to lift and hold the forward panel when installing the panel on the missile, or when assembling or disassembling the interstage in the vertical position.

2. Functions in D2-11162 requiring thic capability are: B11.3, B7.4.

Description

The Harness shall consist of a contoured strongback which can be attached to the R. H. Panel of Interstage I - II. The Harness (continued - page 2)

Form 2-2052-100-14

DEPT. RESP.

| ENGINEERING | BASE INSTALLATIONS | MANUFACTURING |
|---|---|---|
| [illegible] 7/31/1 | [illegible] 7-23-1 | [illegible] |

11-15-61 2-1-62
8-31-61

Item No. 7641

Nomenclature: Harness - R. H. Panel, Missile Interstage I - II

Description (continued)
will include provisions for overhead crane lifting. Harness attach holes will be provided in the panel.

11-15-61
8-31-61

| TYPE OF LIST | DATE |
|---|---|
| FACTORY SUPPORT EQUIPMENT | 4-1-61 |
| Model Designation and Name of End Item<br>H & D SM-80 WEAPON SYSTEM | Revision No. and Date<br>8-1-61 |

**Contractor**
BAC

**Contract No.**
AF04 (647) -580

**Item No.**
7642

**Nomenclature**
Harness - L. H. Panel, Missile Interstage I - II

**Quantity**

**Total On Order**

**Estimated Production Lead Time**

**List Number**

**Manufacturer's Part Number** 25-21627

**Specification No.**

**Specification Date**

**Description**

Function

1. A requirement exists for a means to lift and hold the panel when installing the panel on the Missile.

2. Functions in D2-11162 requiring this capability are: B11.3, B7.4.

Description

The Harness consists of a contoured strongback which can be attached to the L. H. Panel of Interstage I - II. Harness attach holes will be provided in the panel. The Harness will include provisions for overhead crane lifting.

Form 2-2052-100-14

DEPT. RESP.

| ENGINEERING | BASE INSTALLATIONS | MANUFACTURING |
|---|---|---|
| | | |

11-15-61 2-1-62
8-31-61

| | |
|---|---|
| TYPE OF LIST<br>FACTORY SUPPORT EQUIPMENT | DATE<br>3-15-61 |
| Model Designation and Name of End Item<br>H & D SM-80 WEAPON SYSTEM | Revision No. and Date |
| Contractor<br>BOEING | |
| Contract No.<br>AF04 (647) - 580 | |
| Item No.<br>7648 | |
| Nomenclature<br>Installation Kit - Linear Explosive | |
| Quantity | |
| Total On Order | |
| Estimated Production Lead Time | |
| List Number | |
| Manufacturer's Part Number 25-21672 | |
| Specification No. | |
| Specification Date | |

**Description**

Function

1. A requirement exists for a means to accomplish the installation of linear explosive on interstage I - II and II-III.

2. Functions in D2-11162 requiring this capability are: B11.9.

Description

The kit will consist of the following items: pull wire, pressure sensitive tape, knife, adhesive, adhesive brush, crimping tool and suitable container.

Form 2-2052-100-14

DEPT. RESP. - Manufacturing

| ENGINEERING | BASE INSTALLATIONS | MANUFACTURING |
|---|---|---|
| [illegible] | [illegible] | [illegible] |

11-15-61
8-31-61

| TYPE OF LIST | DATE |
|---|---|
| FACTORY SUPPORT EQUIPMENT | 3-15-61 |
| Model Designation and Name of End Item: H&D SM-80 WEAPON SYSTEM | Revision No. and Date: 9/19/61 |

Contractor
BOEING

Contract No.
AF04(647)-580

Item No.
7653

Nomenclature
Winch, Portable-Rocket Motor Transfer

Quantity

Total On Order

Estimated Production Lead Time

List Number

Manufacturer's Part Number 25-21658

Specification No.

Specification Date

Description

Function:

1. A requirement exists for a means of accomplishing transfer of Rocket Motor, Stage I, II and II between Trucks, Rocket Motor and fixed storage rails in the Igloos and the joining rails in the MAB's.
2. In addition, capability has to be provided to winch Rocket Motors at a slow rate of travel and close-tolerance movement during the joining cycle.
3. Functions in D2-11162 requiring this capability are: B2.2, B16.1, B1612, B16.6, B16.7, B16.9, B16.10.

Page 1 of 2

Form 2-2052-100-14

DEPT. RESP. - Manufacturing

| ENGINEERING | BASE INSTALLATIONS | MANUFACTURING |
|---|---|---|

2-1-62
11-15-61

Item No. 7653

Nomenclature: Winch, Portable - Rocket Motor Transfer

Description

R

Equipment includes movable, electrically driven winch equipped with castor wheels and suitable brake. This winch shall have the capability to be used in conjunction with Joining Rails (FSE 7628), to move Rocket Motors at a slow rate of speed (5 feet/max. per minute), during joining operations. Winch shall also be used in conjunction with winch provided on the Storage Rail (FSE 7629).

Also included in this equipment are miscellaneous portable sheaves used in conjunction with above listed items.

Controls shall be an integral part of this winch and shall have the capability to control winches of FSE 7628 and 7629.

R

| DEPT. RESP. - Manufacturing Engineering | |
|---|---|
| ENGINEERING | |
| BASE INSTALLATIONS | |
| MANUFACTURING | |

| TYPE OF LIST | DATE |
|---|---|
| FACTORY SUPPORT EQUIPMENT | 4-1-61 |
| Model Designation and Name of End Item: H & D SM-80 WEAPON SYSTEM | Revision No. and Date: 11-22-61 |

Contractor
BOEING

Contract No.
AF04(647)-580

Item No.
7665

Nomenclature
R Kit, Ablative Material Repair

Quantity

Total On Order

Estimated Production Lead Time

List Number

R Manufacturer's Part Number 25-21695

Specification No.

Specification Date

Description

R Function

1. A requirement exists for a means to repair minor damage to the AVCOAT insulation on the Rocket Motors, interstages or skirt of the missile during assembly.
2. Functions in D2-11162 requiring this capability are: B11.19

R Description

This kit consists of required chemicals, mixing and application tools for making repairs to the AVCOAT insulation. The kit shall be packaged in a container suitable for ease of handling. This kit is used in conjunction with "dangerous materials" not included in the kit. These materials are: Aliphatic Naphtla, Type II (TT-N-95) and Presealing Cleaning Solvent, BMS 11-7.

Form 2-2052-100-14

REV 2-1-62

| | |
|---|---|
| TYPE OF LIST<br>FACTORY SUPPORT EQUIPMENT | DATE<br>4-20-61 |
| Model Designation and Name of End Item<br>H & D SM-80 WEAPON SYSTEM | Revision No. and Date<br>8-4-61 |

Contractor

BAC

Contract No.
AF 04 (647)-580

Item No.
7666

Nomenclature

Platform, Portable - Highway Transporters

Quantity

Total On Order

Estimated Production Lead Time

List Number

Manufacturer's Part Number 25-21772

Specification No.

Specification Date

Description Function

1. A means for positioning the highway transporters at the proper elevation and in a level plane on the 102" missile centerline in respect to the engine storage rails or the missile assembly rails when transferring engines between the highway transporters and engine storage building or the Missile Assembly Building.

2. Functions in D2-11162 requiring this capability are: B2.2 .

Description

The equipment shall include the following:

DEPT. RESP. Manufacturing

| ENGINEERING | BASE INSTALLATIONS | MANUFACTURING |
|---|---|---|
| | | |

Form 2-2052-100-14

11-15-61
8-31-61

Item No. 7666

Nomenclature: Platform, Portable - Highway Transproters

Description: (continued)

1. Wheel restraining block to restrain the highway transporter while on the platform.

2. Lift provisions to make platform portable.

3. Provisions for ramping the highway transporters up to the platform elevation.

4. The platform will be fabricated in equal segments and will include interlocking provisions and means for attaching the ramp. Each platform segment will be of proper length and width to support the rear tandem wheels of the Stage I Engine Transporter. Each set of platforms will include enough platform segments to support the entire Stage I Engine Transporter. The Stage II or Stage III Transporters will use any required number of the platform segments to enable them to be supported in a level plane.

11-15-61
8-31-61

| TYPE OF LIST | DATE |
|---|---|
| FACTORY SUPPORT EQUIPMENT | 4-1-61 |
| Model Designation and Name of End Item<br>H&D SM-80 WEAPON SYSTEM | Revision No. A and Date<br>5-15-62 |

Contractor
BOEING

Contract No.
AF04(647)-580

Item No.
7675

Nomenclature
Test Set - Console, Missile Checkout

Quantity

Total On Order

Estimated Production Lead Time

List Number

Manufacturer's Part Number 25-28819-1

Specification No.

Specification Date

Description

Function

1. A requirement exists to perform a functional test of the Missile Checkout Console (FSE 7723) and an integration test of the Missile Assembly Building test position.
2. Functions in D2-11162 requiring this capability are C9.2, C9.3.

Description

The test set will accept the command signals of the Missile Checkout Console and respond in the same manner as the G&C Computer. The capability is provided to accept cables from the Missile Checkout Console and accept the umbilical cables. When testing at the umbilical, the presence of a voltage at the power terminals will be indicated. The test cables are part of Figure 'A' 7675. The necessary test adaptors to Functional Test Figure A 7675 shall be provided. For detailed design requirements see document D2-9770.

DEPT. RESP.

| ENGINEERING | BASE INSTALLATIONS | MANUFACTURING |
|---|---|---|

Form 2-2052-100-14

6-1-62

| TYPE OF LIST | DATE |
|---|---|
| FACTORY SUPPORT EQUIPMENT | 6-1-61 |
| Model Designation and Name of End Item<br>E&D SM-80 WEAPON SYSTEM | Revision No. and Date |

Contractor
BOEING

Contract No.
AF04(647)-580

Item No.
7678

Nomenclature
Fixture, Test - Ordnance Device

Quantity

Total On Order

Estimated Production Lead Time

List Number

Manufacturer's Part Number

Specification No.

Specification Date

Description

Function

1. A requirement exists for a means to support ordnance device in the Ordnance Test Chamber of the Squib and Ignition Building during functional test with the Aerojet Ordnance Electronic Test Set (FIG. A. 13)
2. Functions in D2-11162 requiring this capability are: B3.3

Description

1. The test fixture shall be a steel framework table with a flat level top. The fixture shall supply mounting provisions for the operational missile Interstage Arm - Disarm Device, the operational third stage Engine Thrust Termination Arm and Disarm Switch, the operational missile Interstage Separation Detonators, and the operational missile

(see page 2)

Form 2-2052-100-14

DEPT. REP. - ENGINEER

| ENGINEERING | BASE INSTALLATIONS | MA[illegible]URING |
|---|---|---|
| [illegible] 5/4/61 | [illegible] | [illegible] |

11-15-61
8-31-61

Item No. 7678

Nomenclature: Fixture, Test - Ordnance Device

Description (Continued)

Engine Ignition Safe and Arm Devices in the Ordnance Test Chamber. The fixture shall be fastened to the floor of the Test Chamber and shall be capable of having the ordnance devices fastened securely to it during testing.

| TYPE OF LIST | DATE |
|---|---|
| FACTORY SUPPORT EQUIPMENT | 6-9-61 |
| Model Designation and Name of End Item: SM-80 WEAPON SYSTEM | Revision No. and Date: A |

**Contractor**
Boeing

**Contract No.**
AF04(647)-580

**Item No.**
7679

**Nomenclature**
Test Set, Assembly, Ordnance Circuit

**Quantity**

**Total On Order**

**Estimated Production Lead Time**

**List Number**

**Manufacturer's Part Number** 25-37396-1 R

**Specification No.**

**Specification Date**

**Description**

Function

1. A requirement exists for a means to accomplish a No Voltage check on the umbilical cables prior to connection to the missile receptacles in the Missile Assembly Building.
2. Functions in D2-11162 requiring this capability are: B8.1, B8.2, B12.1.
3. Functions in D2-11162-1 requiring this capability are: B8.1, B8.2, B9.1. B11.1

Description

The Test Set Assembly consists of an Explosive Set Circuitry, Test Set (10-20994-1 or 10-20994-11) and adapter cables for self test. R

Form 2-2052-100-14

| TYPE OF LIST<br>FACTORY SUPPORT EQUIPMENT | DATE<br>6-28-61 |
|---|---|
| Model Designation and Name of End Item<br>H&D SM-80 WEAPON SYSTEM | Revision No. and Date B<br>9-28-2 |
| Contractor<br>BOEING | |
| Contract No.<br>AF04(647)-580 | |
| Item No.<br>7682 (CCP-835) | |
| Nomenclature<br>Shelter, Missile and Motor Transfer-Environmental, MAB | |
| Quantity | |
| Total On Order | |
| Estimated Production Lead Time | |
| List Number | |
| Manufacturer's Part Number 25-21705 | |
| Specification No. | |
| Specification Date | |

Description

Function:

1. The requirement exists for an environmental shelter which will maintain the motor or missile environment within the criteria specified in FM 60-7650.3-4127 (or subsequent authorized criteria) during the following transfer operations:

   A. Transfer of motors from
      1. Multistage Transporter to MAB
      2. T-E to MAB
      3. Ballistic Missile Shipping & Storage Container to Missile Assembly Building.

Page 1 of 2

Form 2-2052-100-14

Department Responsible Engineering | Basic Installations | Facilities | Manufacturing

10-22-62

REVISED

FACTORY SUPPORT EQUIPMENT

ITEM NO. 7682

R Nomenclature: Shelter, Missile and Motor Transfer-Environmental, MAB

Function: (Continued from page 1)

B. Transfer of Missile from

R 1. Missile Assembly Building to Ballistic Missile Shipping and Storage Container or Transporter-Erector

2. Functions in D2-11162 requiring this capability are B4.2, B13.1, B13.2, B16.1, B16.6

Physical Description:

1. The shelter must:

a. Allow for vehicle movement to allow normal alignment per D2-11162.
b. Permit movement of personnel and equipment as required to accomplish transfer operations per D2-11162.
R c. Protect the motor or missile from all types of precipitation, including blowing sand, and excessive solar effects.

2. The following basic criteria for external conditions are:

a. Minimum outside temperature will be -5° F.
b. Maximum outside wind velocity will be 38 knots.
c. The building and vehicle doors will be open up to 3 hours.

12-20-62

| TYPE OF LIST | DATE |
|---|---|
| FACTORY SUPPORT EQUIPMENT | |
| Model Designation and Name of End Item<br>H&D SM-80 WEAPON SYSTEM | Revision and Date<br>8-1-61 |

Contractor
BOEING

Contract No.
AF04(647)-580

Item No.
7683

Nomenclature
R Distribution Box, NCU Test, CPA

Quantity

Total On Order

Estimated Production Lead Time

List Number

Manufacturer's Part Number

Specification No.

Specification Date

Description

Function

1. A requirement exists to provide a distribution box for cable interconnections between the power racks (figure A 7729), the NCU and angular accelerometer to be tested, and the C89 in the NCU and Angular Accelerometer Test Position of the Component Processing Area. The interfaces are such that a distribution box is required. R
2. Functions in D2-11162 requiring this capability are E13.1.1

Description

R The Distribution Box is equipped with proper external receptacles, internal wiring, and terminal connectors to provide for cable interconnections.

DEPT. RESP.

| ENGINEERING | BASE INSTALLATIONS | MANUFACTURING |
|---|---|---|
| | | |

Form 2-2052-100-14

11-15-61 2-1-62
8-31-61

| TYPE OF LIST | DATE |
|---|---|
| FACTORY SUPPORT EQUIPMENT | 7-25-61 |
| Model Designation and Name of End Item<br>H & D SM-80 WEAPON SYSTEM | Revision No. and Date |
| Contractor<br>BAC | |
| Contract No.<br>AF04 - (647) - 580 | |
| Item No.<br>7684 | |
| Nomenclature<br>Dolly, Joining - Amplifier, NCU Stage III | |
| Quantity | |
| Total On Order | |
| Estimated Production Lead Time | |
| List Number | |
| Manufacturer's Part Number | |
| Specification No. | |
| Specification Date | |

**Description**

Function

1. A requirement exists for a dolly to be used in conjunction with the missile joining rails (FSE 7628) while installing the amplifier portion of the NCU on the Stage III Engine prior to installation of the balance of the NCU.

2. Functions in D2-11162 requiring this capability are: B5.1

Description

The dolly shall consist of a "V" grooved wheeled dolly which will cradle the amplifier. The dolly will include means for holding and sufficient adjustments for positioning the amplifier.

Form 2-2052-100-14

DEPT. RESP. - Manufacturing Engineering

| ENGINEERING | BASE INSTALLATIONS | MANUFACTURING |
|---|---|---|
| | 7-25-1 | |

11-15-61
8-31-61

| TYPE OF LIST | DATE |
|---|---|
| FACTORY SUPPORT EQUIPMENT | 8-1-61 |
| Model Designation and Name of End Item<br>H&D SM-80 WEAPON SYSTEM | Revision No. and Date<br>8-8-61 |

Contractor
BOEING

Contract No.
AF04(647)-580

Item No.
7685

Nomenclature
Rails - Storage, Missile - GTM-77

Quantity

Total On Order

Estimated Production Lead Time

List Number

Manufacturer's Part Number 25-21697

Specification No.

Specification Date

Description
Function & Requirements

1. Provisions must be made to store GTM-77 after the initial checkout of the Missile Assembly Building.
2. GTM-77 may be used as a training device and mockup; minor modifications may bemade during this storage period.
3. The missile will be placed on storage rails in the north end of Building 1264; the nose of the missile will be toward the north door.
4. The north end of the storage rails will be placed approximately 3 inches from the door.
5. The external roadway to floor elevation is 28.8 inches.
6. GTM-77 is included as a portion of AF04(647)-580 contract (refer to MM Operating Directives numbers 9 and 36A dated June 5, 1961 and July 21, 1961 respectively.

(see page 2)

DEPT. RESP. - Manufacturing Engineering

| ENGINEERING | BASE INSTALLATIONS | MANUFACTURING |
|---|---|---|
| [illegible] 8-8 | [illegible] 8-8-61 | [illegible] |

Form 2-2052-100-14

11-15-61
8-31-61

ITEM NO. 7685

NOMENCLATURE Rails - Storage, Missile - GTM-77

DESCRIPTION:

The rails provide two 80 foot metal guide tracks, spaced at proper width and height to match the operational handling harness and maintain a missile centerline transfer height of 102 inches from ground level. The guide tracks are supported by structural bracing. Included in the rails are entach blocks and grounding cables for missile transfer, wheel blocks, provisions for engine harness grounding and rail extensions with provisions to match with the MCAT rails. R

11-15-61
8-31-61

| TYPE OF LIST | DATE |
|---|---|
| FACTORY SUPPORT EQUIPMENT | 8-25-61 |
| Model Designation and Name of End Item<br>H&D SM-80 WEAPON SYSTEM | Revision No. and Date<br>9-13-61 |

Contractor
BOEING

Contract No.
AF04(647)-580

Item No.
7686

Nomenclature
Clamp Assembly, Missile Transfer

Quantity

Total On Order

Estimated Production Lead Time

List Number

R Manufacturer's Part Number 25-27632-1

Specification No.

Specification Date

Description

Function:

1. A requirement exists to provide a means of attachment between the Missile Base Adapter Ring and winch cables for missile roll transfer between the SSCEM and fixed rails. R
2. Functions in D2-11162 requiring this capability are: B13.1, B13.2, and B13.6, B13.7, B13.9, B13.10.

Description

R This device is attachable to the lower center of the Missile Base Adapter Ring and provides for attachment to MCAT Trailer winch cables, on the forward end and Joining Rail Winch Cable (FSE 7628), as well as, Storage Rail Winch Cable (FSE 7629) at the rear end.

Form 2-2052-100-14

DEPT. RESP. - Project Engineering

| ENGINEERING | BASE INSTALLATIONS | MANUFACTURING |
|---|---|---|
| | | |

6-1-62

| TYPE OF LIST | DATE |
|---|---|
| FACTORY SUPPORT EQUIPMENT | 9-8-61 |
| Model Designation and Name of End Item<br>H&D SM-80 WEAPON SYSTEM | Revision No. A and Date<br>9-28-2 |

Contractor
BOEING

Contract No.
AF04(647)-580 (CCP 844)

Item No.
7687

Nomenclature
Shelter, Missile and Motor Transfer - Environmental, Missile/Motor Storage Building

Quantity

Total On Order

Estimated Production Lead Time

List Number

Manufacturer's Part Number 25-21709

Specification No.

Specification Date

Description
Function:

1. The requirement exists for an environmental shelter during the following transfer operations:

   1. Transfer of motors from:
      a. Highway Transporter to Missile/Motor Storage Building (MMSB
      b. MMSB to Multistage Transporter
      c. Ballistic Missile Shipping and Storage Container to MMSB

Page 1 of 2

Form 2-2052-100-14

Department Responsible
Engineering | Basic Installations | Facilities | Manufacturing

10-22-62

REVISED

FACTORY SUPPORT EQUIPMENT

ITEM NO. 7687

Nomenclature: Shelter, Missile and Motor Transfer - Environmental, Missile/Motor Storage Building

Function: (Continued from page 1)

2. Transfer of Missile from:
   a. MMHB to Ballistic Missile Shipping and Storage Container or Transporter-Erector

2. Functions in D2-11162 requiring this capability are B4.2, B2.2, B13.1, B13.2, B13.6, B13.7, B13.9, B13.10, B16.6, B16.7, B16.9 and B16.10.

   Functions in D2-11162-1 requiring this capability are B2.2, B4.2 B12.6, B12.7, B12.9, B10.10.

Physical Description:

1. The shelter must:

   a. Allow for vehicle movement to allow normal alignment per D2-11162 and D2-11162-1.
   b. Permit movement of personnel and equipment as required to accomplish transfer operations per D2-11162 and D2-11162-1.
   c. Protect the motor or missile from all types of precipitation, including blowing sand and excessive solar exposure.
   f. Permit opening and closing of vehicle and building doors after the vehicle has partially entered the shelter.
   g. Attach and seal to vehicles without permanently installed attachment fittings.
   k. Provide adequate vehicle entrance closure, with or without vehicle entered, to minimize entry of drifting snow or sand.

2. The following basic criteria for external conditions are:

   a. Minimum outside temperature will be -5°F
   b. Maximum outside wind velocity will be 38 knots.
   c. The building and vehicle doors will be open up to 3 hours.

10-22-62

| TYPE OF LIST | DATE |
|---|---|
| FACTORY SUPPORT EQUIPMENT | 9-18-1 |
| Model Designation and Name of End Item<br>H&D SM-80 WEAPON SYSTEM | Revision No. and Date |
| Contractor<br>BOEING | |
| Contract No.<br>AF 04(647)-580 | |
| Item No.<br>7688 | |
| Nomenclature<br>Control - Winch, MAB - Storage Bunker | |
| Quantity | |
| Total On Order | |
| Estimated Production Lead Time | |
| List Number | |
| Manufacturer's Part Number 25-23067 | |
| Specification No. | |
| Specification Date | |

**Description**

Function:

(1) Means are required to control the operation of engine and missile transfers in and out of MCATS using the following equipment:
(A) Missile Joining Rail winch (part of FSE item 7628).
(B) Engine and Missile Storage Rail winch (part of FSE item 7629).
When used in conjunction with either A or B above.

(2) Functions in D2-11162 requiring this capability are: B 13.2, B13.1, B13.6, B13.7, B13.9, B13.10.

Description

This equipment shall consist of motor controls as required to operate 1A and 1B above, with associated cables and connectors.

DEPT. RESP. - MANUFACTURING

| ENGINEERING | BASE INSTALLATIONS | MANUFACTURING |
|---|---|---|
| | | |

Form 2-2052-100-14



2-1-62
REV. 11-15-61

Item No. 7688

Nomenclature: Control Assembly, Transfer Winches

Description: (Continued)

Also included is a hand held operator's panel with sufficient cable to permit observation of the various transfer operations. Stowage provisions for the operator's pendant will be provided.

| TYPE OF LIST | DATE |
|---|---|
| FACTORY SUPPORT EQUIPMENT | 10/19/61 |
| Model Designation and Name of End Item<br>H&D SM-80 WEAPON SYSTEM | Revision No. and Date |
| Contractor<br>BOEING | |
| Contract No.<br>AF04(647)-580 | |
| Item No.<br>7689 | |
| Nomenclature<br>Bridle-Rocket Motor, Stage I | |
| Quantity | |
| Total On Order | |
| Estimated Production Lead Time | |
| List Number | |
| Manufacturer's Part Number 25-26113 | |
| Specification No. | |
| Specification Date | |

**Description**

Function

1. A requirement exists to connect the 1st Stage Rocket Motor Carriage to the following for various transfer operations.
   A. Engine & Missile Storage Rails winch cable (part of FSE 7629).*
   B. Missile Joining Rails winch cable (part of FSE 7628).*
   C. Ballistic Missile Trailer winch cable (part of MGE 4129) **

* Connection to rear towing lugs of 1st Stage Rocket Motor Carriage (for transfer of a single 1st Stage Rocket Motor or rocket motors in adjacent sets).

**Connection to front towing lugs of 1st Stage Rocket Motor Carriage (for transfer of a single 1st Stage Rocket Motor only).

DEPT. RESP. - MANUFACTURING

| ENGINEERING | BASE INSTALLATIONS | MANUFACTURING |
|---|---|---|

Form 2-2052-100-14

ITEM No. 7689

Nomenclature: Bridle-Rocket Motor, Stage I

Function: (Continued)

2. The propulsive load must be transmitted from a point midway between the transfer rails to the towing lugs of the 1st Stage Rocket Motor Carriage.

3. The connecting device must be capable of transmitting the load required to transfer a 1st, 2nd and 3rd Stage Rocket Motor in train.

4. Functions in D2-11162 requiring this capability are: B2.2.1, B4.2.1 and B4.2.4.

Description:

The above requirements will be fulfilled by a bridle consisting of a spreader bar and cables with suitable end fittings for attachment to the 1st Stage Rocket Motor Carriage and the various winch cables.

NOTE: For transfer of Rocket Motors in trains, this bridle is used in conjunction with FSE 7691 and FSE 7690.

| TYPE OF LIST | DATE |
|---|---|
| FACTORY SUPPORT EQUIPMENT | 10/19/61 |
| Model Designation and Name of End Item<br>H&D SM-80 WEAPON SYSTEM | Revision No. and Date |

**Contractor**
BOEING

**Contract No.**
AF04(647)-580

**Item No.**
7690

**Nomenclature**
Bridle-Rocket Motor, Stage III

**Quantity**

**Total On Order**

**Estimated Production Lead Time**

**List Number**

**Manufacturer's Part Number** 25-23068

**Specification No.**

**Specification Date**

**Description**
Function:

1. A requirement exists to transfer a single 3rd Stage Rocket Motor or rocket motors in adjacent sets between fixed rails and the SSCBM. A device is required to connect the front towing lugs of the 3rd Stage Rocket Motor Carriage to the Ballistic Missile Trailer winch cable.

2. A requirement exists to connect the front towing lugs of the 2nd Stage Rocket Motor Carriage to the Ballistic Missile Trailer winch cable for transfer of a single 2nd Stage Rocket Motor between fixed rails and the SSCBM.

Page 1 of 2

Form 2-2052-100-14

DEPT. RESP. - MANUFACTURING

| ENGINEERING | BASE INSTALLATIONS | MANUFACTURING |
|---|---|---|
| [illegible] | [illegible] | [illegible] |

REV. 11-15-61

ITEM NO. 7690

Nomenclature: Bridle-Rocket Motor, Stage III

Function: (Continued)

3. The propulsive load must be transmitted from a point midway between the transfer rails to the towing lugs on the Rocket Motor Carriage.

4. The connecting device must be capable of transmitting the load required to transfer a 1st, 2nd and 3rd Stage Rocket Motor in train.

5. Functions in D2-11162 requiring this capability are: B4.2.1 and B4.2.4

Description:

The above requirements will be fulfilled by a bridle with suitable end fittings for attachment to the 2nd or 3rd Stage Rocket Motor Carriage front towing lugs and the Ballistic Missile Trailer winch cables.

NOTE: For transfer of Rocket Motors in train, this bridle is used in conjunction with FSE 7691 and FSE 7689.

| TYPE OF LIST | DATE |
|---|---|
| FACTORY SUPPORT EQUIPMENT | 9-26-61 |
| Model Designation and Name of End Item: H&D SM-80 WEAPON SYSTEM | Revision No. and Date |

Contractor: BOEING

Contract No.: AF04(647)-580

Item No.: 7691

Nomenclature: Positioning Set - Rocket Motor Carriage

Quantity:

Total On Order:

Estimated Production Lead Time:

List Number:

Manufacturer's Part Number: 25-32273-1

Specification No.:

Specification Date:

Description
Function

1. The requirement exists to position rocket motor carriages during the transfer of Rocket Motors-Stage I, II, and III, in Shipping and Storage Container-Ballistic Missile (MGE 4095)

2. Functions in D2-11162 requiring this capability are: B4.2

Description: Positioning Set consists of positioning rod assemblies which are a part of MGE 4280. Specifically, the following assemblies shall be used: 25-25004-1 and 25-25004-2. These assemblies will space Rocket Carriage, Stage I and Stage II, as well as, Rocket Carriage, Stage II and III. Rocket Motors are secured to the vehicles mentioned above when transferring Rocket Motors in a train. NOTE: Only the positioning rod assemblies of 25-23760 shall be used.

DEPT. RESP. - Project Engineering

| ENGINEERING | BASE INSTALLATIONS | MANUFACTURING |
|---|---|---|
| | | |

Form 2-2052-100-14

REV. 6-1-62

818

| TYPE OF LIST<br>FACTORY SUPPORT EQUIPMENT | DATE<br>1-16-62 |
|---|---|
| Model Designation and Name of End Item<br>H&D SM-80 WEAPON SYSTEM | Revision No. and Date 3-22-3 |
| Contractor<br>BOEING | |
| Contract No.<br>AF04(647)-580 | |
| Item No.<br>7695 | |
| Nomenclature<br>Simulators, Airborne Components, Missile Test | |
| Quantity | |
| Total On Order | |
| Estimated Production Lead Time | |
| List Number | |
| Manufacturer's Part Number 25-34559 | |
| Specification No. | |
| Specification Date | |

Description
Function

1. A requirement exists for a means to isolate faulty airborne components on the missile when the missile checkout console indicates that a downstage failure exists. The following simulators are required: First, second, third, stage NCU signal input loads, G&C Signal output loads, angular accelerometer signal input loads, Stage I and Stage II NCU Battery Squibs and 1st Stage Ignition squibs.

2. Functions in D2-11162 requiring this capability: E1.3

3. Functions in D2-11162-1 requiring this capability are: E1.3

Manufacturing
Basic Installations
Facilities
Engineering
Assigned to Engineering.

Form 2-2052-100-14

Sheet 1 of 7



9-15-63

Description (continued)

The simulators consist of the appropriate mating raceway cable connectors, internal circuitry, external cables, switches, and test points. The external cables shall have a minimum length of twelve feet to allow for accessibility to control switches and test points. The necessary test adapters to prevent probing of the connectors during functional testing of the simulators shall be provided. The simulators shall be packaged in five portable configurations:

One containing the simulated loads for the G&C section; one containing the loads to simulate the NCU's and AAU; the other 3 configurations shall be shorting plugs. The circuits on pages 4, 5, and 6 shall be combined to provide the most economical packaging.

## SIMULATORS, AIRBORNE COMPONENTS

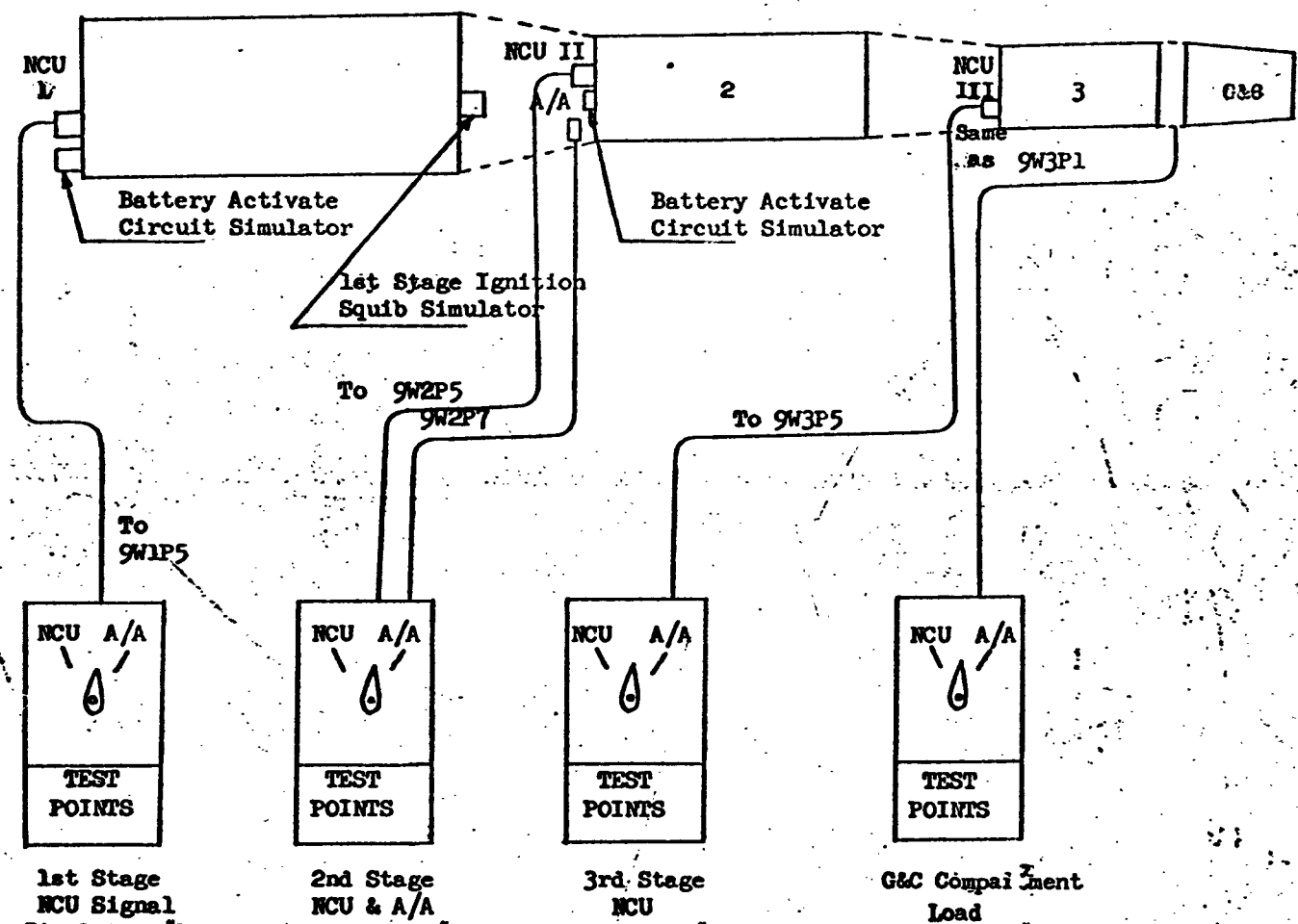

SIMULATOR # 1 STAGE NCU'S AND AAU

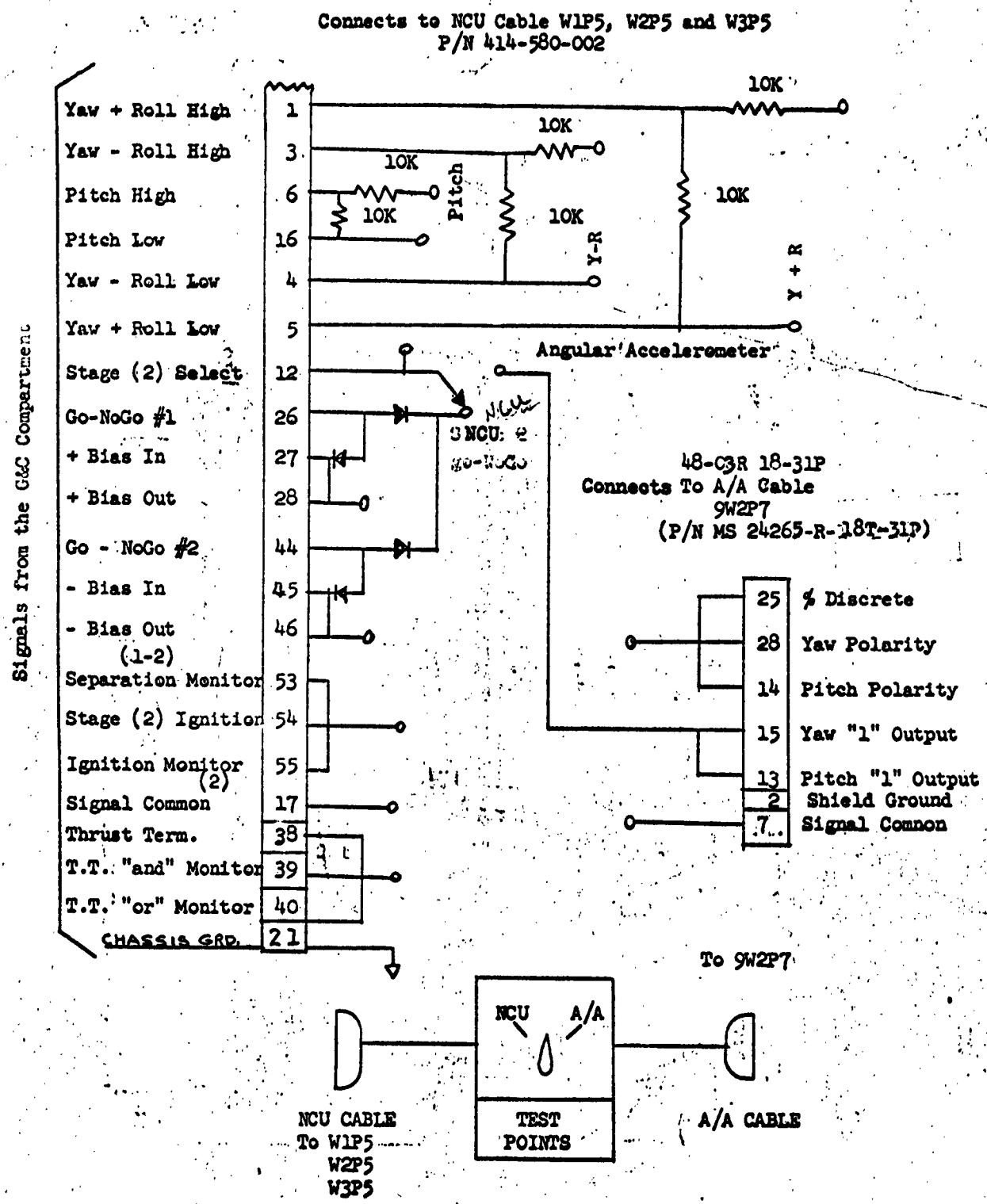




4-15-63

LOAD SIMULATOR #2 - G&C COMPARTMENT

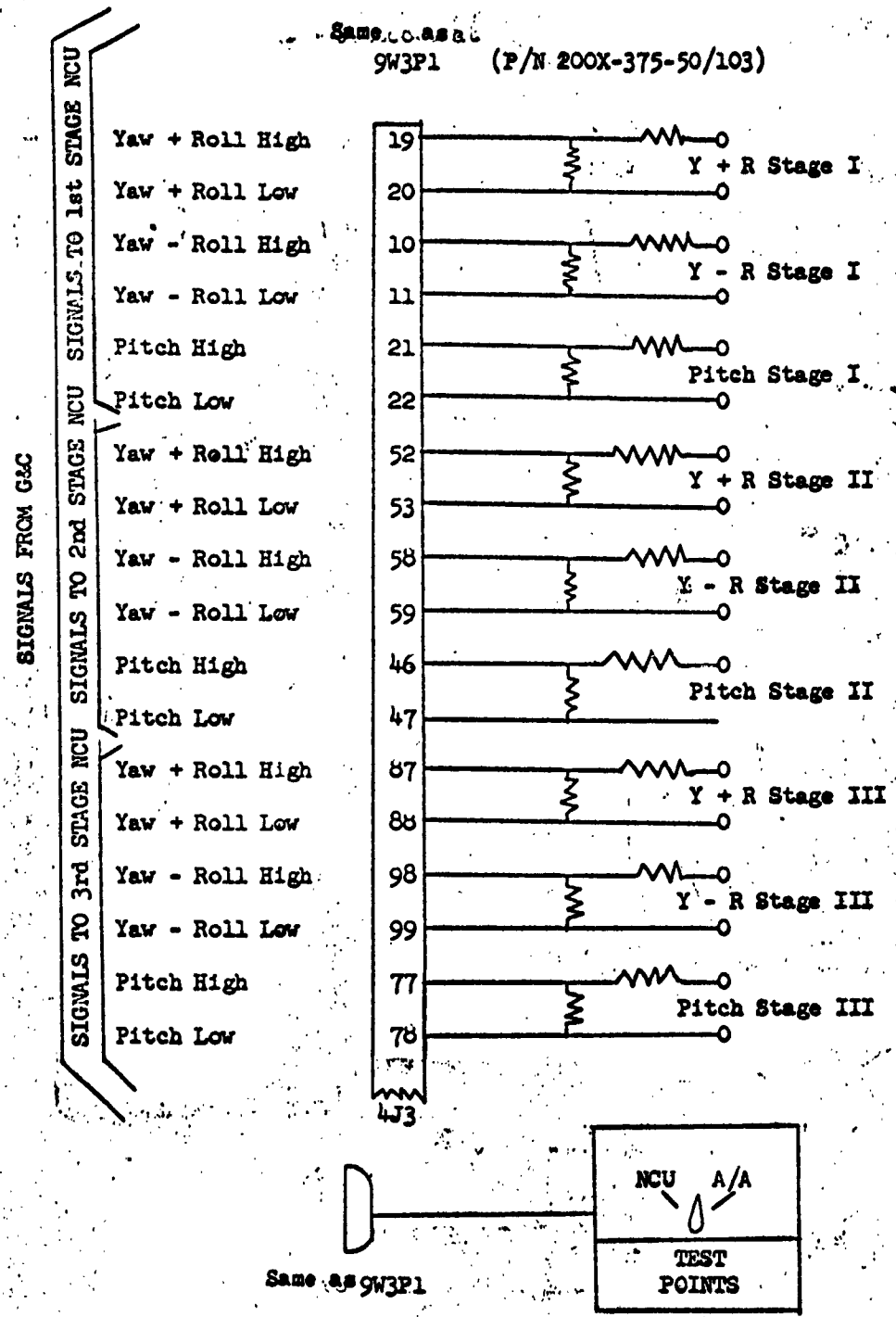


NOTE: All resistors are 10K Ω 1/8 watt



4-16-63

FACTORY SUPPORT EQUIPMENT ITEM NO. 7695



SIMULATOR # 2 - G&C COMPARTMENT

Connect at a 3P1 (P/N 200X-375-50(103)

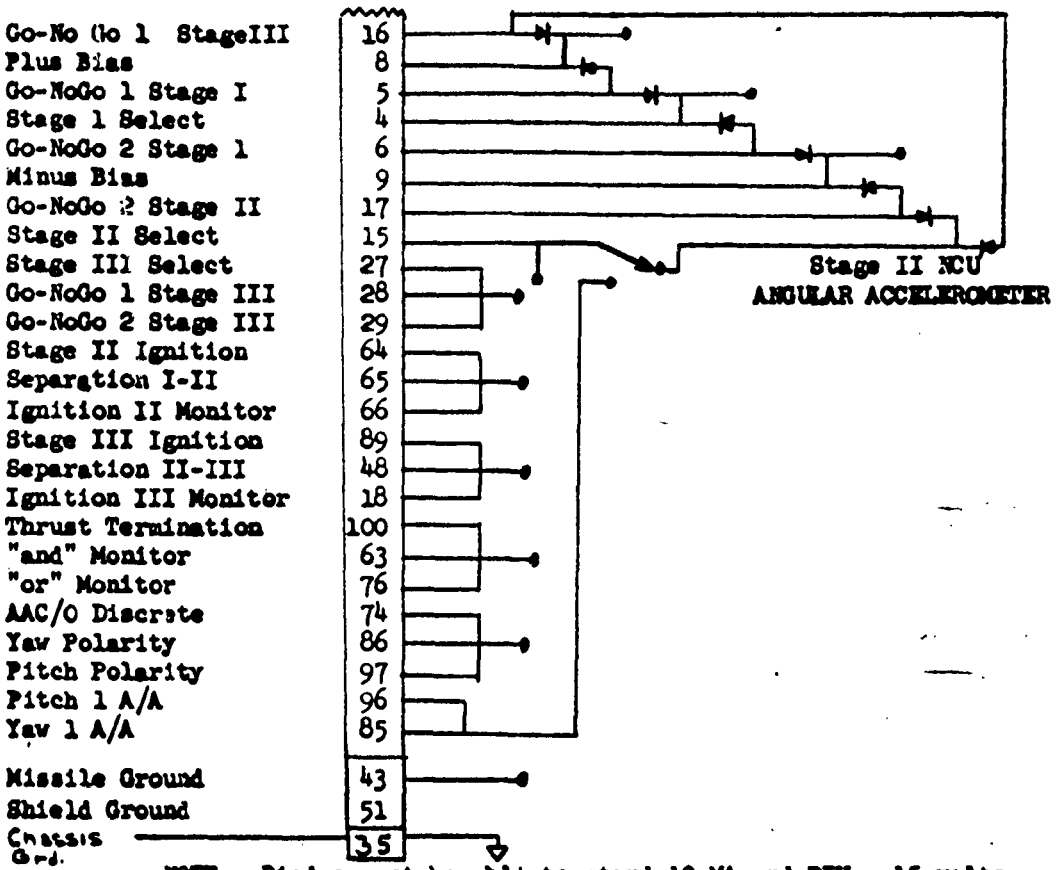


NOTE: Diodes must be able to stand 10 MA and PIV = 15 volts.

Diode PS520M P/N 479-0003-001

9-15-63

Stage II - NCU Battery Activate

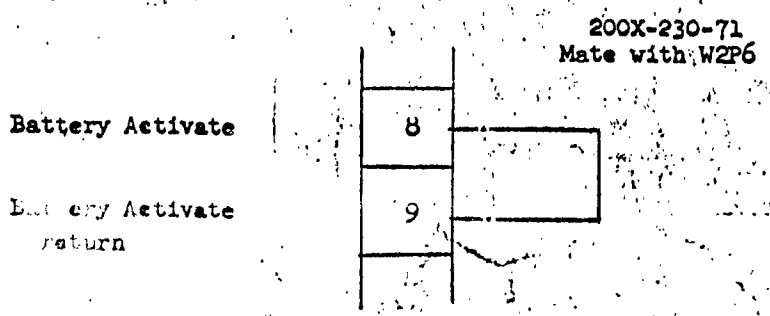


Stage I - NCU Battery Activate

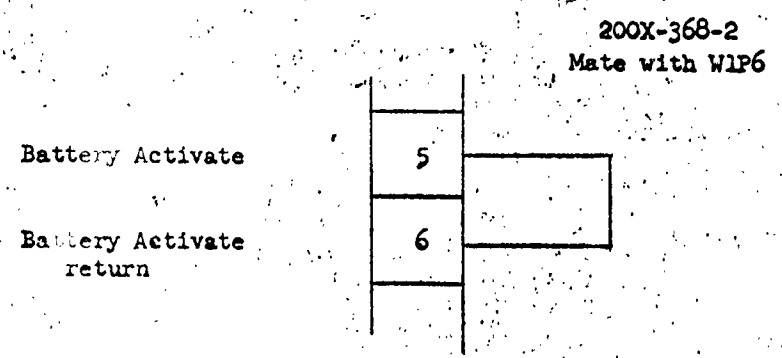


1st Stage Ignition S&A

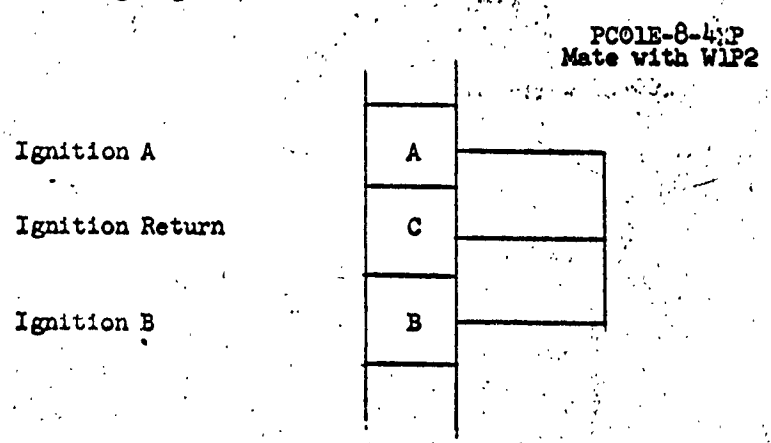


4-15-63

| TYPE OF LIST | DATE |
|---|---|
| FACTORY SUPPORT EQUIPMENT | 2-20-62 |
| Model Designation and Name of End Item, H&D SM-80 WEAPON SYSTEM | Revision No. and Date A |

R

Contractor
BOEING

Contract No.
AF04(647)-580

Item No.
7696

Nomenclature
Test Set and Adapter Cables - Raceway Cables

Quantity

Total On Order

Estimated Production Lead Time

List Number

Manufacturer's Part Number 25-35813-1 R

Specification No.

Specification Date

**Description**

Function

1. A requirement exists for a means to test dielectric integrity of ordnance circuits of operational raceway cables after the cables have been installed onto the missile, but prior to connection of airborne devices.
2. Function in D2-11162 & D2-11162-1 requiring this capability is: B7.6

Description

The test set shall (a) be automatic; (b) use a 28 V DC power source, fused at 100 milliamperes, to supply test voltage; (c) contain the necessary circuitry to test the insulation between each of the squib R

(see page 2)

Form 2-2052-100-14

FACTORY SUPPORT EQUIPMENT

MRCN 7696

NOMENCLATURE: Test Set and Adapter Cables - Raceway Cables

Description (cont'd)

and arming wires and all other wires and shields; (d) provide an indication when the measured insulation resistance is less than 1 megohm; (e) include the necessary cables to connect to the raceway cables during testing; (f) include the necessary test adapter to allow functional testing the test set without probing the connectors.

1-11-63

| TYPE OF LIST | DATE |
|---|---|
| FACTOR SUPPORT EQUIPMENT | 3-15-61 |
| Model Designation and Name of End Item: H & D SM-80 WEAPON SYSTEM | Revision No. and Date: 8-1-61 |

**Contractor**

BAC

**Contract No.**
AF04 (47) - 580

**Item No.**
7701

**Nomenclature**

Adapter, Joining - Nozzle Control Unit, Stage I

**Quantity**

**Total On Order**

**Estimated Production Lead Time**

**List Number**

**Manufacturer's Part Number** 25-21608

**Specification No.**

**Specification Date**

**Description**

Function

1. A requirement exists for an adapter to be used in conjunction with the final assembly positioning dolly, (Ref. Figure A 7708), to position and join the NCU to the engine.

2. Function in D2-11162 requiring this capability are: B5.1

Description

The joining adapter is to be designed to mount on the final assembly positioning dolly to support the NCU. All adjustments for positioning the NCU are controlled by the adjusting mechanism

(continued - page 2)

Form 2-2052-100-14

DEPT. RESP.

| ENGINEERING | BASE INSTALLATIONS | MANUFACTURING |
|---|---|---|
| C.A. [illegible] 7/31/61 | R.E. [illegible] 7-28-61 | [illegible] |

11-15-61
8-31-61

Item No. 7701

Nomenclature: Adapter, Joining - Nozzle Control Unit, Stage I

Description (continued)
on the positioning dolly. The adapter will attach to the flame deflector ring nutplates in the NCU cover casting.

| TYPE OF LIST<br>FACTORY SUPPORT EQUIPMENT | DATE<br>3-15-61 |
|---|---|
| Model Designation and Name of End Item<br>H & D SM-80 WEAPON SYSTEM | Revision No. and Date<br>8-1-61 |
| Contractor<br>BAC | |
| Contract No.<br>AF04 (647) - 580 | |
| Item No.<br>7702 | |
| Nomenclature<br>Adapter, Joining - Nozzle Control Unit, Stage II | |
| Quantity | |
| Total On Order | |
| Estimated Production Lead Time | |
| List Number | |
| Manufacturer's Part Number 25-21609 | |
| Specification No. | |
| Specification Date | |

**Description**

Function

1. A requirement exists for an adapter to be used in conjunction with the final assembly positioning dolly, (Ref. Figure A 7708), to position and join the NCU to the engine.

2. Functions is D2-11162 requiring this capability are: B5.1

Description

The joining adapter is to be designed to mount on the final assembly positioning dolly to support the NCU. All adjustments for positioning the NCU are to be controlled by the adjusting mechanism on

(continued - page 2)

Form 2-2052-100-14

DEPT. RESP. - ENGINEERING | BASE INSTALLATIONS | MANUFACTURING

11-15-61
8-31-61

Item No. 7702

Nomenclature: Adapter, Joining - Nozzle Control Unit, Stage II

Description (continued)
the positioning dolly. The adapter will attach to the flame deflector ring nutplates in the NCU cover casting.

11-15-61
8-31-61

| TYPE OF LIST | DATE |
|---|---|
| FACTORY SUPPORT EQUIPMENT | 3-15-61 |
| Model Designation and Name of End Item<br>H & D SM-80 WEAPON SYSTEM | Revision No. and Date<br>8-1-61 |

**Contractor**
BAC

**Contract No.**
AF04-(647) - 580

**Item No.**
7703

**Nomenclature**
Adapter, Joining - Nozzle Control Unit, Stage III

**Quantity**

**Total On Order**

**Estimated Production Lead Time**

**List Number**

**Manufacturer's Part Number** 25-21610

**Specification No.**

**Specification Date**

**Description**

Function

1. A requirement exists for an adapter to be used in conjunction with the final assembly positioning dolly, (Ref. Figure A 7708), to position and join the NCU to the engine.

2. Functions in D2-11162 requiring this capability are: B5.1

Description

1. The joining adapter is to be designed to mount on the final assembly positioning dolly to support the NCU. All adjustments for positioning the NCU are to be controlled by the

(continued - page 2)

Form 2-2052-100-14

DEPT. RESP.

| ENGINEERING | BASE INSTALLATIONS | MANUFACTURING |
|---|---|---|
| C.R. [illegible] 7/31/61 | [illegible] | [illegible] |

10-22-62

Item No. 7703

Nomenclature: Adapter, Joining - Nozzle Control Unit, Stage III

Description (continued)
adjustment mechanism on the positioning dolly. The adapter will attach to the flame deflector ring nutplates in the NCU cover casting.

10-22-62

| TYPE OF LIST | DATE |
|---|---|
| FACTORY SUPPORT EQUIPMENT | 3-15-61 |
| Model Designation and Name of End Item<br>H&D SM-80 WEAPON SYSTEM | Revision No. and Date<br>6-15-61 |

Contractor

BOEING

Contract No.
AF04(647)-580

Item No.
7707

Nomenclature

Dolly, Positioning - G&C Section

Quantity

Total On Order

Estimated Production Lead Time

List Number

Manufacturer's Part Number 25-21600

Specification No.

Specification Date

Description

Function

1. A requirement exists for supporting, positioning and aligning the G&C section when joining to the stage III engine.
2. Functions in D2-11162 requiring the capabilities are: B9.1

Description

A cradle-type wheeled dolly with break apart construction for removal after assembly. It is provided with sling attach points to facilitat handling and placing on the assembly-rails. Vertical, transverse, rol yaw and pitch adjustments are provided. Dolly shall be compatible with sling and harness-G&C section (FSE 7634).

DEPT. RESP. - Manufacturing

| ENGINEERING | BASE INSTALLATIONS | MANUFACTURING |
|---|---|---|
| | | |

R

Form 2-2052-100-14

11-15-61
8-31-61

| TYPE OF LIST | DATE |
|---|---|
| FACTORY SUPPORT EQUIPMENT | 3-15-61 |
| Model Designation and Name of End Item<br>H & D SM-80 WEAPON SYSTEM | Revision No. and Date<br>8-1-61 |

**Contractor**
BOEING

**Contract No.**
AF 04(647)-580

**Item No.**
7708

**Nomenclature**
Dolly, Positioning - Final Assembly

**Quantity**

**Total On Order**

**Estimated Production Lead Time**

**List Number**

**Manufacturer's Part Number** 25-21606

**Specification No.**

**Specification Date**

**Description**

Function

1. A requirement exists for a means of supporting, positioning, and aligning NCU's and Interstages during joining operations.

2. Functions in D2-11162 requiring the capabilities are: B5.1, B7.4

Description

A V-Groove wheeled dolly shall be provided with sling attach points to facilitate handling and placing on the assembly rails. Vertical, lateral, roll, pitch and yaw adjustments shall be provided. The dolly will be provided with a spindle to support and secure all Interstage and NCU adapters (FSE 7701) (continued - page 2)

| DEPT. RESP. - Manufacturing | | |
|---|---|---|
| ENGINEERING | BASE INSTALLATIONS | MANUFACTURING |

Form 2-2052-100-14

11-15-61
8-31-61

SEE



Item No. 7708

Nomenclature: Dolly, Positioning - Final Assembly

Description (continued)
(FSE 7702) (FSE 7703) (FSE 7613) (FSE 7614). A suitable brake shall be an integral part of the dolly to locate the dolly firmly in the operating position on the assembly rails. R

| TYPE OF LIST | DATE |
|---|---|
| FACTORY SUPPORT EQUIPMENT | 3-15-61 |
| Model Designation and Name of End Item: H & D SM-80 WEAPON SYSTEM | Revision No. and Date: 8-1-61 |

**Contractor**
BAC

**Contract No.**
AF04 (647) - 580

**Item No.**
7709

**Nomenclature**
Dolly, Joining - Skirt to Engine

**Quantity**

**Total On Order**

**Estimated Production Lead Time**

**List Number**

**Manufacturer's Part Number** 25-21637

**Specification No.**

**Specification Date**

**Description**

Function

1. A means must be provided to support the skirt during joining to the aft end of the first stage engine. Dolly will be used in conjunction with skirt sling (FSE 7636)

2. Functions in D2-11162 requiring the capabilities are: B7.3

Description

This equipment is a wheeled cradle mounted on the assembly rails and is adjustable in both horizontal and vertical direction.

Form 2-2052-100-14

DEPT. RESP.

| ENGINEERING | BASE INSTALLATIONS | MANUFACTURING |
|---|---|---|
| [illegible] | [illegible] 7-21-61 | [illegible] |

11-15-61
8-31-61

| TYPE OF LIST | DATE |
|---|---|
| FACTORY SUPPORT EQUIPMENT | 3-15-61 |
| Model Designation and Name of End Item<br>H&D SM-80 WEAPON SYSTEM | Revision No. and Date<br>8-1-61 |

**Contractor**
BOEING

**Contract No.**
AF04(647)-580

**Item No.**
7717

**Nomenclature**
Power Supply Group-MAB

**Quantity**

**Total On Order**

**Estimated Production Lead Time**

**List Number**

**Manufacturer's Part Number**

**Specification No.**

**Specification Date**

**Description**

Function

1. A requirement for a DC Power Supply Group to perform missile tests in the Missile Assembly Building. R

2. Functions In D2-11162 requiring this capability are: B6.1, B8.1, B8.2, B10.1, B12.1.

Description

The DC Power Supply Group consists of T-R units, power switching panels and cooling blower. Due to the current requirement for performing the test in Function 1. above, the power supplies are designed to operate specifically in the Missile Assembly Building. R

For detailed design information see specifications 10-20937-1, -2, and D2-20938-1. For detailed design requirements see document D2-11261.

Form 2-2052-100-14

DEPT. RESP. - ENGINEERING

| ENGINEERING | BASE INSTALLATIONS | MANUFACTURING |
|---|---|---|

11-15-61
8-31-61

339

| TYPE OF LIST | DATE |
|---|---|
| FACTORY SUPPORT EQUIPMENT | 3-15-61 |
| Model Designation and Name of End Item: H&D SM-80 WEAPON SYSTEM | Revision No. and Date: 8-1-61 |

Contractor: BOEING

Contract No.: AF04(647)-580

Item No.: 7718

Nomenclature: Cable Assemblies, Equipment Interconnecting, MAB

Quantity:

Total On Order:

Estimated Production Lead Time:

List Number:

Manufacturer's Part Number: 21-51012

Specification No.:

Specification Date:

Description

Function

1. A requirement exists to provide electrical interconnection and the necessary ground cables for the power Supply Group, Missile Checkout Console, G&C Cooling Unit, Test Junction Boxes, and Electric Power Panel.
2. Functions in D2-11162 requiring this capability are: B6.1, B8.1, B8.2, B10.1, B12.1

Description

The cable assemblies consist of cables equipped with connectors at each end which allow each cable to connect to its proper receptacle. Ground cables are equipped with ground lug connectors to ground the equipment listed in Function 1 above to a common ground point. (See page 2)

Form 2-2052-100-14

DEPT. RESP. - Engineering

| ENGINEERING | BASE INSTALLATIONS | MANUFACTURING |
|---|---|---|
| C. R. [illegible] | [illegible] | [illegible] |

11-15-61
8-31-61

FACTORY SUPPORT EQUIPMENT

Item No. 7718

Nomenclature: Cable Assemblies, Equipment Interconnecting, MAB

Description

For cable layout of test area see drawing 21-51012. For detail design requirements refer to document D2-11261. R

11-15-61
8-31-61

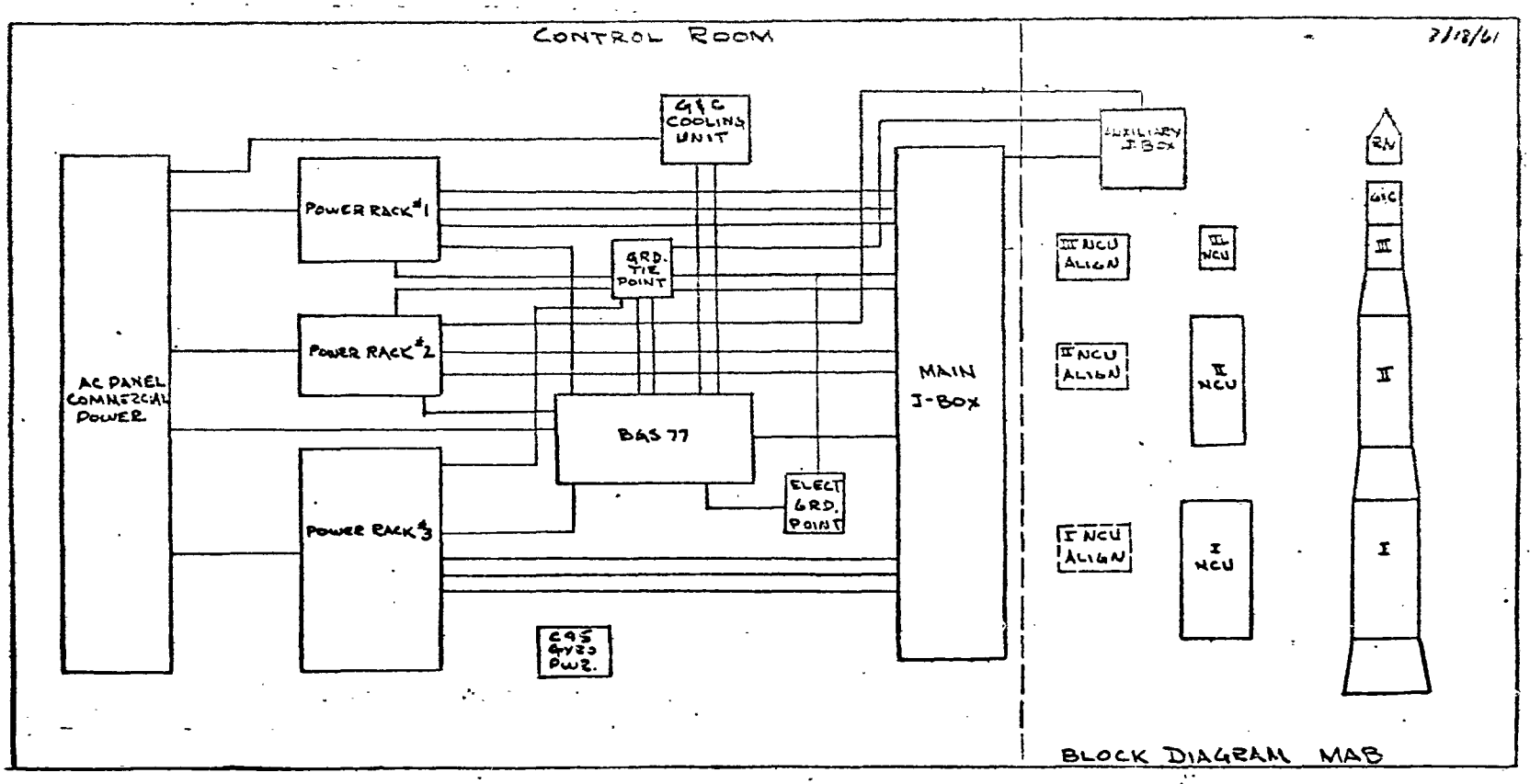


7718 CABLE ASSEMBLIES, EQT. INTERCONNECTING, MAB

11-15-61
8-31-61

APP. I

D2-11162
68
R

| TYPE OF LIST | DATE |
|---|---|
| [illegible] SUPPORT EQUIPMENT | 3-15-61 |
| Model Designation and Name of End Item: R&D SM-80 WEAPON SYSTEM | Revision No. and Date: 8-4-61 |

Contractor
[illegible]

Contract No.
AF04(647)-580

Item No.
7719

Nomenclature
Cable Assemblies, NCU Test

Quantity

Total On Order

Estimated Production Lead Time

List Number

Manufacturer's Part Number 21-51012

Specification No.

Specification Date

Description
Function
1. A requirement exists to provide electrical connections between the junction box and missile components and the NCU Zero Alignment Test Set in the "J" Box.
2. Functions in D2-11162 requiring this capability are: B6.1

Description
Cable assemblies provide connection of:
1. Test "J" Box & NCU I
2. Test "J" box & NCU II
3. Test "J" Box & NCU III
4. NCU Zero Alignment and "J" box.

For detailed design requirements see document D2-11261

Form 2-2052-100-14

11-15-61
8-31-61

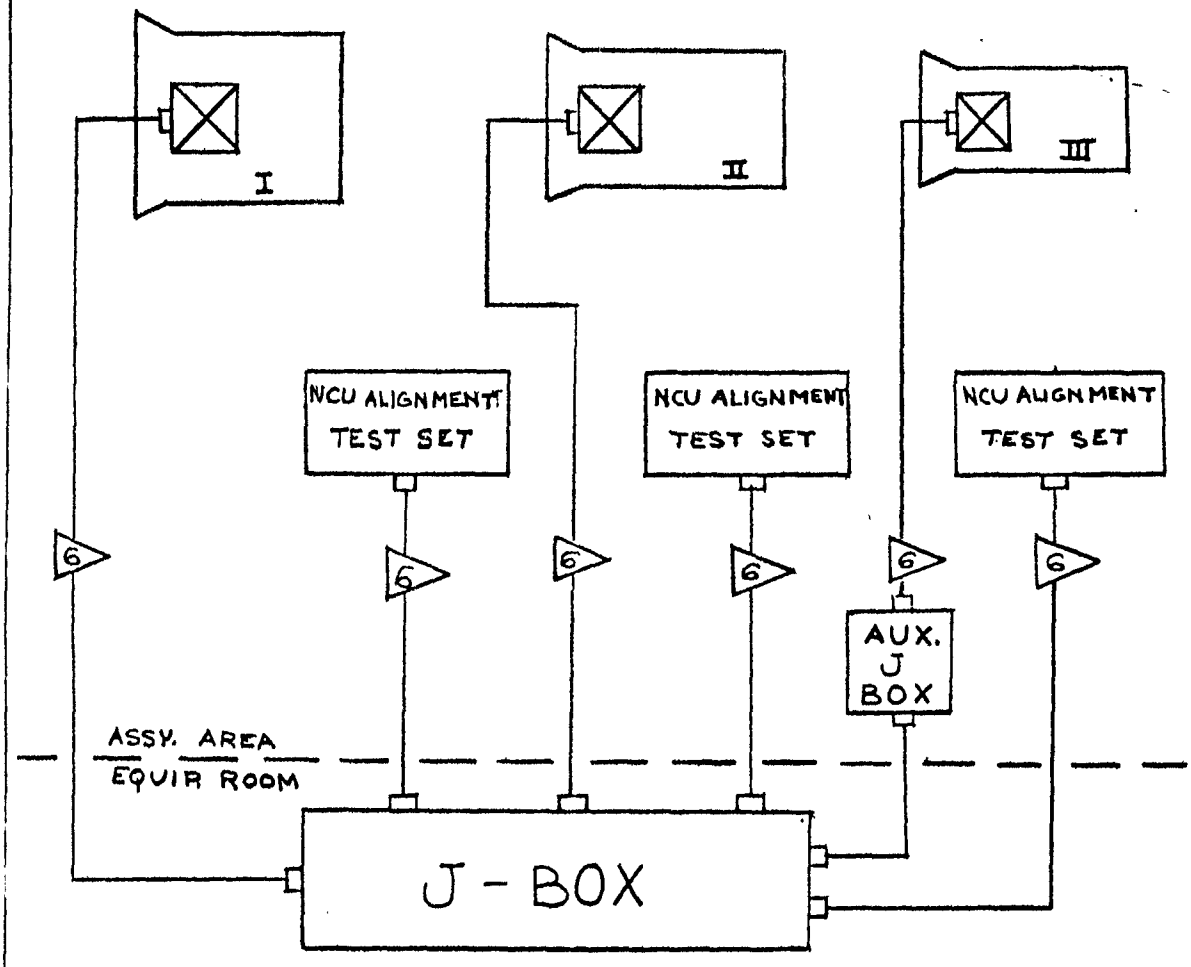


NOTE

6 CABLES COVERED IN ITEM FSE 7719

# FSE 7719

# NCU TEST CABLE

## ASSEMBLIES

| TYPE OF LIST | DATE |
|---|---|
| FACTORY SUPPORT EQUIPMENT | 3-15-61 |
| Model Designation and Name of End Item: H&D SM-80 WEAPON SYSTEM | Revision No. and Date: 8-4-61 |

Contractor
BOEING

Contract No.
AF04(647)-580

Item No.
7720

Nomenclature
Cable Assemblies, Umbilical, MAB

Quantity

Total On Order

Estimated Production Lead Time

List Number

Manufacturer's Part Number 10-20954; 10-20955

Specification No.

Specification Date

Description

Function

1. A requirement exists to provide electrical connection between the junction box and the missile skirt and the missile G & C Section, and provide coolant transmission between G&C Cooling Unit and Missile G&C section.
2. Functions in D2-11162 requiring this capability are: B6.1, B8.1, B8.2, B10.1, B12.1

Description

Cable assemblies provide connection of: (1) Test "J" box to skirt, (2) Test "J" box to G&C Section, and (3) Cooling Unit to G&C section.

R For detailed design requirements see document D2-11261.

DEPT. RESP. - ENGINEERING

| ENGINEERING | BASE INSTALLATIONS | MANUFACTURING |
|---|---|---|
| | | |

Form 2-2052-100-14

11-15-61
8-31-61

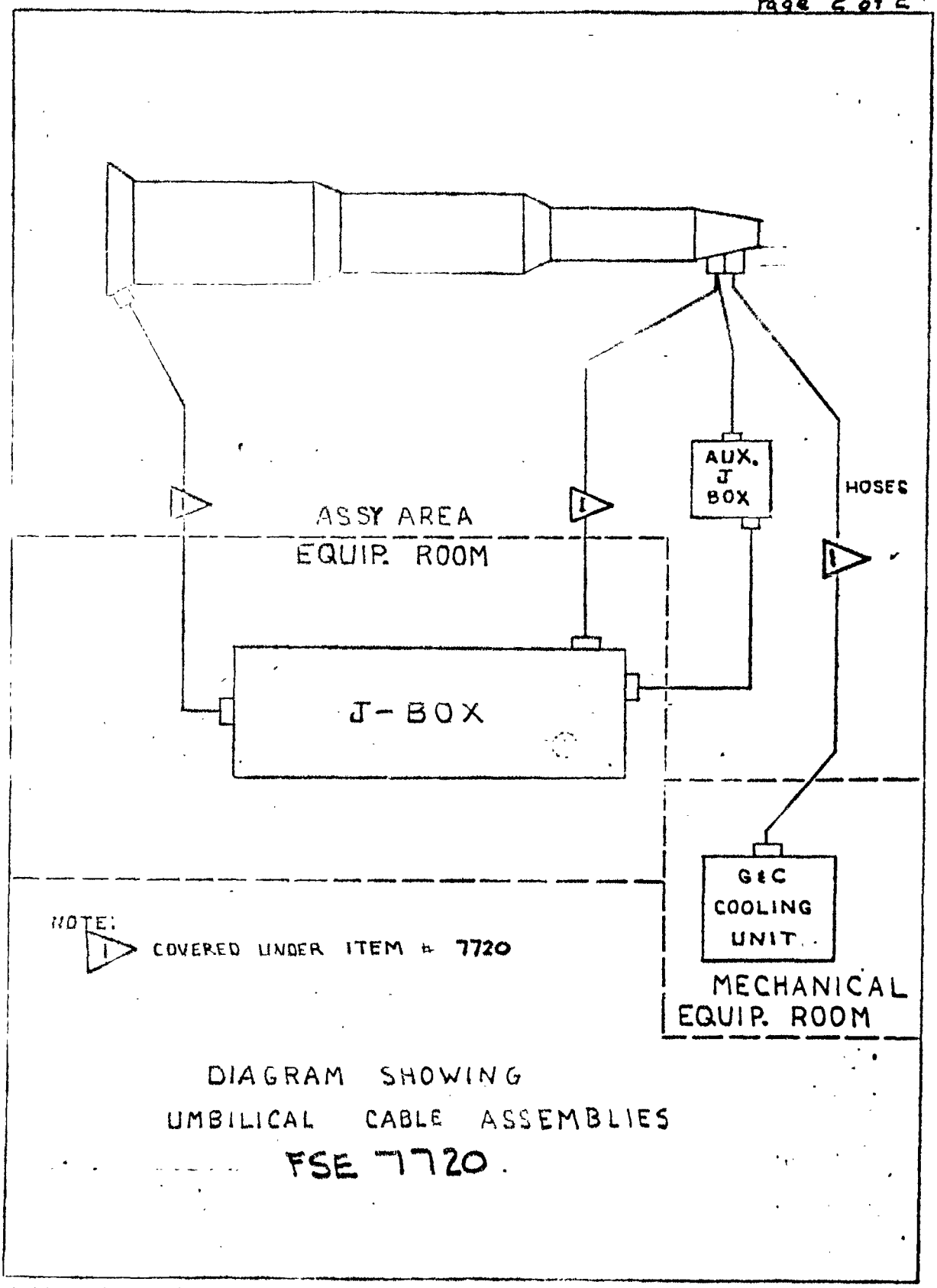


DIAGRAM SHOWING
UMBILICAL CABLE ASSEMBLIES
FSE 7720.



11-15-61
8-31-61

| TYPE OF LIST | DATE |
|---|---|
| FACTORY SUPPORT EQUIPMENT | 3-15-61 |
| Model Designation and Name of End Item. H&D SM-80 WEAPON SYSTEM | Revision No. and Date 8-4-61 |
| Contractor BOEING | |
| Contract No. AF04(647)-580 | |
| Item No. 7721 | |
| Nomenclature Junction Box, Test, MAB | |
| Quantity | |
| Total On Order | |
| Estimated Production Lead Time | |
| List Number | |
| Manufacturer's Part Number | |
| Specification No. | |
| Specification Date | |

**Description**

Function

1. A requirement exists for a junction box between test equipment and missile components in the MAB.
2. Functions in D2-11162 requiring this capability are: B6.1, B8.1, B8.2, B10.1, B12.1

Description

The junction box provides a means for interconnecting the cable assemblies in the MAB. The design of the junction box is such that it is used specifically for the missile test area. The following cable assemblies are connected to the box; Equipment Interconnecting Cable Assemblies, Sub. Fig. "A" 7718; NCU Test Cable Assembly, Sub. Fig. "A" 7719; Umbilical Cable Assembly Sub. Fig. "A" 7720.
For detail design requirements see document D2-10125.

Form 2-2052-100-14

| DEPT. RESP. - Engineering | | |
|---|---|---|
| ENGINEERING | BASE INSTALLATIONS | MANUFACTURING |

11-15-61
8-31-61

| | |
|---|---|
| TYPE OF LIST<br>FACTORY SUPPORT EQUIPMENT | DATE<br>3-15-61 |
| Model Designation and Name of End Item<br>H&D SM-80 WEAPON SYSTEM | Revision No. and Date<br>6-15-61 |

Contractor
BOEING

Contract No.
AF04 (647) - 580

Item No.
7722

Nomenclature
Dummy Load, Re-Entry Vehicle

Quantity

Total On Order

Estimated Production Lead Time

List Number

Manufacturer's Part Number 25-21668

Specification No.

Specification Date

Description

Function

1. Provides electrical load for G&C section to simulate R/V during missile checkout in the Missile Assembly Area.
2. Functions in D2-11162 requiring the capabilities are: [illegible], B10.1, B12.1

Description

The dummy load consists of resistance loads and continuity loops to simulate re-entry vehicle during missile checkout.

DEPT. RESP.
ENGINEERING | BASE INSTALLATIONS | MANUFACTURING

2-1-62
11-15-61
8-31-61

| TYPE OF LIST | DATE |
|---|---|
| FACTORY SUPPORT EQUIPMENT | 3-15-61 |
| Model Designation and Name of End Item: H&D SM-80 WEAPON SYSTEM | Revision No. and Date: 8-1-61 |

Contractor
BOEING

Contract No.
AF 04(647)-580

Item No.
7723

Nomenclature
Console, Missile Checkout

Quantity

Total On Order

Estimated Production Lead Time

List Number

Manufacturer's Part Number 25-21642

Specification No.

Specification Date

Description
Function

1. A means must be provided whereby signals can be sent to and received from the Guidance Control Section to accomplish testing in the MAB building.
2. A means shall be provided to monitor and check out the ordinance devices in the missile.
3. Functions in D2-11162 requiring the capability are: B6.1, B8.1, B8.2, B10.1, B12.1

Description (See page 2)

DEPT. RESP. - Engineering
ENGINEERING | BASE INSTALLATIONS | MANUFACTURING

R

11-15-61
8-31-61

Item No. 7723

Nomenclature: Console, Missile Checkout

Description

The Missile Checkout Console is designed to operate specifically in the Missile Assembly Building Control Room. The console operates in conjunction with the power supplies, G&C cooling unit, main junction box, and C95 power supply. AC power requirement is 117V.

R

For detailed design requirements see Document D2-9410.

11-15-61
8-31-61

| | |
|---|---|
| TYPE OF LIST<br>FACTORY SUPPORT EQUIPMENT | DATE<br>3-15-61 |
| Model Designation and Name of End Item<br>H&D SM-80 WEAPON SYSTEM | Revision No. and Date<br>11-22-61 |
| Contractor<br>BOEING | |
| Contract No.<br>AF04(647)-580 | |
| Item No.<br>7724 | |
| Nomenclature<br>Test Set, NCU Zero Alignment | |
| Quantity | |
| Total On Order | |
| Estimated Production Lead Time | |
| List Number | |
| Manufacturer's Part Number 25-26801-1 or -17 | |
| Specification No. | |
| Specification Date | |

**Description**

Function:

1. A requirement exists for a means of applying an electrical zero signal to the NCU's while hydraulic and electronic power is applied.
2. Functions in D2-11162 requiring this capability are: B6.1,B3.1

Description:

The test set is a portable device which has the capabilities of applying hydraulic and electronic power to the NCU's while providing zero electrical signals. The test set is designed to operate in the MAB in conjunction with the power supply group, the missile checkout console and the main junction box; and in the CPA in conjunction with the power supply group and the distribution box. For detailed design requirements see document D2-11579.

DEPT. RESP. - Engineering

| ENGINEERING | BASE INSTALLATIONS | MANUFACTURING |
|---|---|---|

Form 2-2052-100-14

1-11-63

| TYPE OF LIST | DATE |
|---|---|
| FACTORY SUPPORT EQUIPMENT | 3-15-61 |
| Model Designation and Name of End Item<br>H&D SM-80 WEAPON SYSTEM | Revision No. and Date |
| Contractor<br>BOEING | |
| Contract No.<br>AF04(647)-580 | |
| Item No.<br>7726 | |
| Nomenclature<br>Cable Assembly, Interconnecting, G&C Test Position | |
| Quantity | |
| Total On Order | |
| Estimated Production Lead Time | |
| List Number | |
| Manufacturer's Part Number 21-51012 | |
| Specification No. | |
| Specification Date | |

Description

Function

1. A requirement exists to provide electrical connection between the G&C Cooling Unit, Test Junction Box, Power Supply Group, and Electrical Power distribution box of each of three G&C Test Positions of the Component Processing Area.
2. Functions in D2-11162 requiring this capability are: E1.3.Z

Description

Cable Assembly, Interconnecting, G&C Test Position consists of cables of proper wire length and size with required connectors to mate with those units listed in Function No. 1 above. The cable assembly consists of cables equipped with connectors at each end which allow each cable to be connected to its proper receptacle in the equipment listed in Function 1. For design requirements see document D2-11261.

DEPT. RESP. - PROJECT ENGINEERING

| ENGINEERING | BASE INSTALLATIONS | MANUFACTURING |
|---|---|---|
| [illegible] | H. E. [illegible] 1/25 | [illegible] |

Form 2-2052-100-14

2-1-62
11-15-61
8-31-61

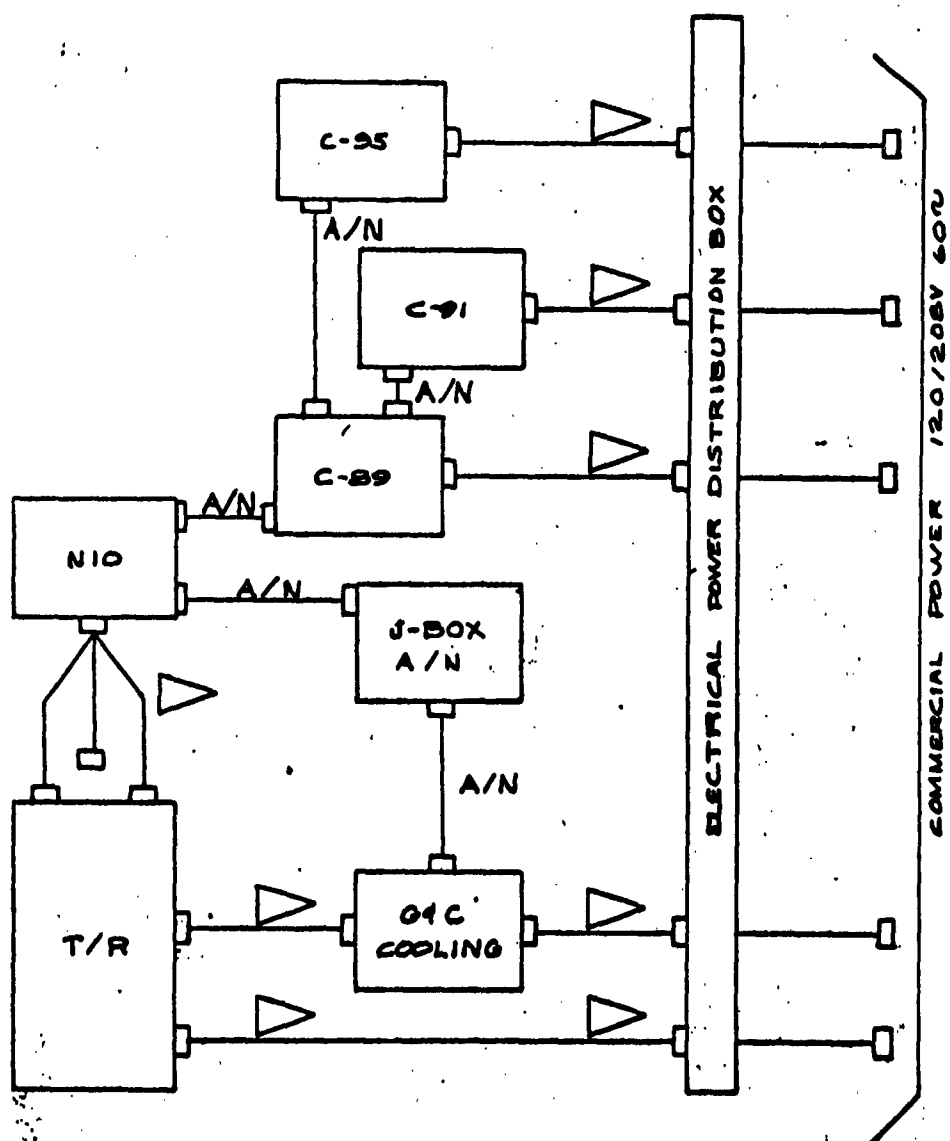


CABLES COVERED IN ITEM # 7726

CABLE ASSEMBLY, INTERCONNECTING, G4C TEST POSITION 7726

SHT 2 OF 2

U3-4071-1000 (was BAC 1546-L-83)

11-15-61
8-31-61

ESE

R

| TYPE OF LIST | DATE |
|---|---|
| FACTORY SUPPORT EQUIPMENT | 3-15-61 |
| Model Designation and Name of End Item<br>H&D SM-80 WEAPON SYSTEM | Revision No. and Date<br>2-7-61 |

Contractor

BOEING

Contract No.
AF04(647)-580

Item No.
7727

Nomenclature

Cable Assembly, Interconnecting, NCU Test Position

Quantity

Total On Order

Estimated Production Lead Time

List Number

Manufacturer's Part Number

Specification No.

Specification Date

Description

Function

1. A requirement exists to provide electrical connection between the Power Supply Group, Test Junction Box and the Electrical Distribution Panel in the three NCU Test Positions of the Component Processing Areas.
2. Functions in D2-11162 requiring this capability are: E1.3.2.

Description

Cable Assembly, Interconnecting, NCU Test Position consists of cables of proper wire length and size with required connectors to mate with those units listed in Function No. 1 above. The cable assemblies consist of cables equipped with connectors at each end which allow each cable to connect to its proper receptable in the equipment listed in Function 1. For Design requirements see document D2-11261.

DEPT. RESP. - Project Engineering

| ENGINEERING | BASE INSTALLATIONS | MANUFACTURING |
|---|---|---|
| | | 7-11-1 |

R

2-1-62
11-15-61
8-31-61

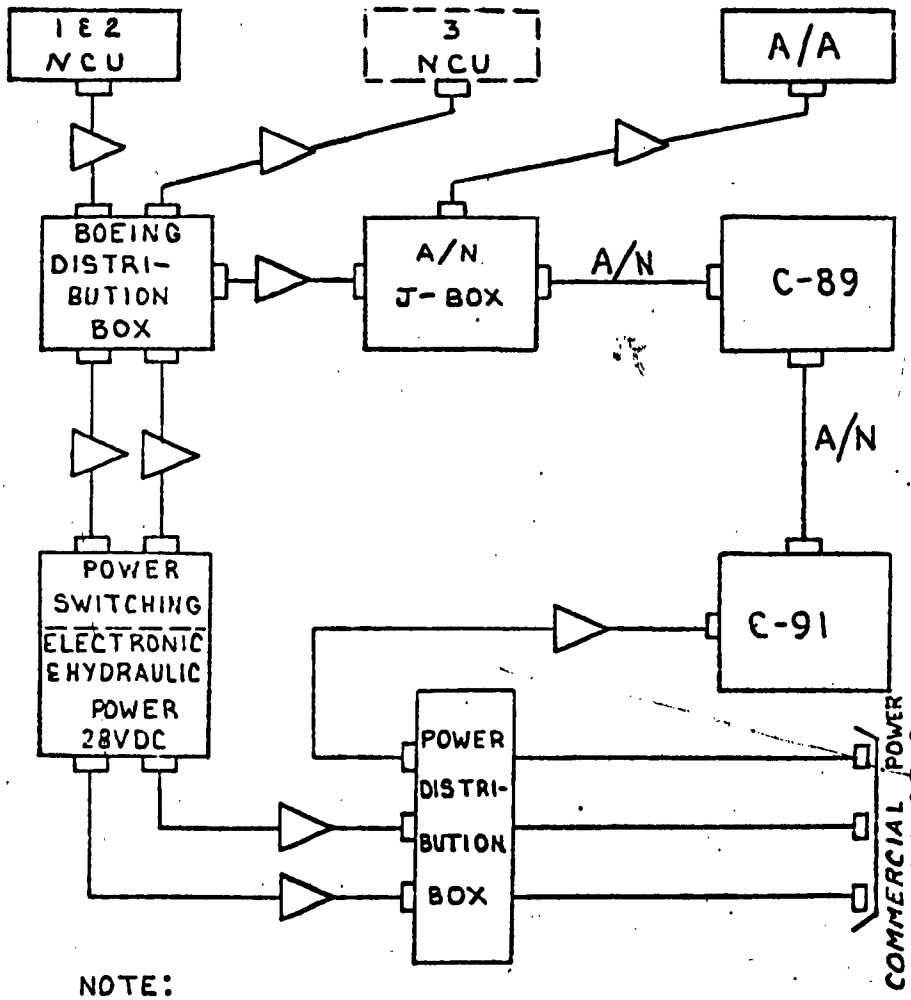


NOTE:

CABLES COVERED IN ITEM #7727

CABLE ASSEMBLY, INTERCONNECTING, NCU

TEST POSITION

7727

11-15-61
8-31-61

| TYPE OF LIST | DATE |
|---|---|
| FACTORY SUPPORT EQUIPMENT | 3-15-61 |
| Model Designation and Name of End Item<br>H&D SM-80 WEAPON SYSTEM | Revision No. and Date<br>8-24-61 |

**Contractor**
BOEING

**Contract No.**
AF04(647)-580

**Item No.**
7728

**Nomenclature**
Power Supply Group, G&C Test, CPA

**Quantity**

**Total On Order**

**Estimated Production Lead Time**

**List Number**

**Manufacturer's Part Number** 10-20938-3

**Specification No.**

**Specification Date**

**Description**

Function

1. A requirement exists for a DC Power Supply for N10 Testing at one G&C test position in the Component Processing Area.
2. Functions in D2-11162 requiring this capability are: E13.2.

Description

A DC Power Supply consists of transformer rectifier units, power switching panels, and cooling blower. Due to the current requirements, the power supplies are designed to operate specifically in the Guidance and Control test area. For detailed design information see Specification 10-20938-2.
For detailed design requirements see document D2-11261.

DEPT. RESP. - Engineering
ENGINEERING | BASE INSTALLATIONS | MANUFACTURING

Form 2-2052-100-14

2-1-62
11-15-61
8-31-61

| TYPE OF LIST | DATE |
|---|---|
| FACTORY SUPPORT EQUIPMENT | 3-15-61 |
| Model Designation and Name of End Item<br>H&D SM-80 WEAPON SYSTEM | Revision No. and Date<br>8-1-61 |

**Contractor**

BOEING

**Contract No.**
AF04(647)-580

**Item No.**
7729

**Nomenclature**

Power Supply Group, NCU Test, CPA

**Quantity**

**Total On Order**

**Estimated Production Lead Time**

**List Number**

**Manufacturer's Part Number**

**Specification No.**

**Specification Date**

**Description**

Function

1. A requirement exists for a DC Power Supply Group to be used in the NCU test position in the Component Processing Area.

2. Functions in D2-11162 requiring this capability are: E1.3.2

Description

The DC Power Supply Group consists of transformer rectifier units, power switching panel, and cooling blower. Due to different current requirements, the power supplies are designed to operate specifically in the NCU test area. For detailed design information see specification 10-20937-3 and 10-20938-2.
For detailed design requirements see document D2-11261.

Form 2-2052-100-14

DEPT. RESP. - Engineering

| ENGINEERING | BASE INSTALLATIONS | MANUFACTURING |
|---|---|---|
| | | |

2-1-62
11-15-61
8-31-61

| TYPE OF LIST | DATE |
|---|---|
| FACTORY SUPPORT EQUIPMENT | 4-1-61 |
| Model Designation and Name of End Item<br>H & D SM-80 WEAPON SYSTEM | Revision No. and Date<br>8-1-61 |

Contractor
BOEING

Contract No.
AF04 (647) - 580

Item No.
7730

Nomenclature
Harness - R. H. Panel, Missile Interstage II - III

Quantity

Total On Order

Estimated Production Lead Time

List Number

Manufacturer's Part Number 25-21797

Specification No.

Specification Date

Description

Function

1. A requirement exists for a means to lift and hold the panel (R.H.) when installing the panel on the Missile.

2. Functions in D2-11162 requiring this capability are: B11.3,B7.4.

Description

The harness consists of a contoured strongback which can be attached to the R. H. Panel of Interstage II - III. Harness attach holes will be provided in the panel. The harness will include provisions for overhead crane lifting.

Form 2-2052-100-14

DEPT. RESP. - MANUFACTURING

| ENGINEERING | BASE INSTALLATIONS | MANUFACTURING |
|---|---|---|
| | | |

2-1-62
11-15-61
8-31-61

8SE

R

| TYPE OF LIST | DATE |
|---|---|
| FACTORY SUPPORT EQUIPMENT | 4-1-61 |
| Model Designation and Name of End Item<br>H & D SM-80 WEAPON SYSTEM | Revision No. and Date<br>8-1-61 |

**Contractor**
BOEING

**Contract No.**
AF04 (647) - 580

**Item No.**
7731

**Nomenclature**
Harness - L. H. Panel, Missile Interstage II - III R

**Quantity**

**Total On Order**

**Estimated Production Lead Time**

**List Number**

**Manufacturer's Part Number** 25-21796

**Specification No.**

**Specification Date**

**Description**

Function

1. A requirement exists for a means to lift and hold the panel (L.H) when installing the panel on the Missile. R

2. Functions in D2-11162 requiring this capability are: B11.3, B7.4.

Description

The Harness consists of a contoured strongback which can be attached to the L. H. Panel of Interstage II-III. Harness attach holes will be provided in the panel. The Harness will include provisions for overhead crane lifting. R

DEPT. REP. - Manufacturing

| ENGINEERING | BASE INSTALLATIONS | MANUFACTURING |
|---|---|---|
| | | |

Form 2-2052-100-14

2-1-62
11-15-61
8-31-61



360

658

| TYPE OF LIST | DATE |
|---|---|
| FACTORY SUPPORT EQUIPMENT | 5-29-61 |
| Model Designation and Name of End Item<br>H&D SM-80 WEAPON SYSTEM | Revision No. and Date<br>8-8-61 |

Contractor
BOEING

Contract No.
AF04(647)-580

Item No.
7736

Nomenclature
Cable Assemblies, Power, C91-C90 Test Position R

Quantity

Total On Order

Estimated Production Lead Time

List Number

Manufacturer's Part Number 21-51012

Specification No.

Specification Date

Description
Function
1. A requirement exists to provide electrical connections between the AC power distribution panel and the C90 and C91.
2. Functions in D2-11162 requiring the capability are: D1.1

Description:
Cable assemblies consist of cables with proper connections at both ends.

For a detailed technical criteria see document D2-11261. R

DEPT. RESP. - PROJECT ENGINEERING

| ENGINEERING | BASE INSTALLATIONS | MANUFACTURING |
|---|---|---|
| | | |

Form 2-2052-100-14

2-1-62
11-15-61
8-31-61

| TYPE OF LIST | DATE |
|---|---|
| FACTORY SUPPORT EQUIPMENT | 6-16-61 |
| Model Designation and Name of End Item<br>H&D SM-80 WEAPON SYSTEM | Revision No. and Date |
| Contractor<br>BOEING | |
| Contract No.<br>AF04 (647) - 580 | |
| Item No.<br>7739 | |
| Nomenclature<br>Junction Box, Auxiliary, MAB | |
| Quantity | |
| Total On Order | |
| Estimated Production Lead Time | |
| List Number | |
| Manufacturer's Part Number | |
| Specification No. | |
| Specification Date | |

Description

Function

1. A requirement exists to provide an auxiliary junction box to interconnect cables from the G&C umibilical to the main junction box and the power supply rack in the Missile Assembly Building. Reference drawing 21-51012, item #507.

2. Functions in D2-11162 requiring this capability are B8.1, B8.2, B10.1, B10.2

Description

Junction box to interconnect cable and connectors.

| DEPT. RESP. | |
|---|---|
| ENGINEERING | |
| BASE INSTALLATIONS | |
| MANUFACTURING | |

2-1-62
11-15-61
8-31-61

| TYPE OF LIST | DATE |
|---|---|
| FACTORY SUPPORT EQUIPMENT | August 1, 1961 |
| Model Designation and Name of End Item<br>H&D SM-80 WEAPON SYSTEM | Revision No. and Date |

Contractor

BOEING

Contract No.

AF04(647)-580

Item No.

7740

Nomenclature

Box, Test - Ordnance Cable

Quantity

Total On Order

Estimated Production Lead Time

List Number

Manufacturer's Part Number

Specification No.

Specification Date

Description

Function

1. A requirement exists in the MAB to permit measuring the actual cable resistance of the arming and disarming circuits and to detect excessive resistance in cabling or connectors without the use of live S&A's and Arm-Disarm Devices.

2. Functions in D2-11162 requiring this capability are: B8.2

Description

Box, Test-Ordnance Cables consists of a seven pin connector and circuitry to short pins 4-5 and pins 6-7. Pins 1-2 and 1-3 will be shorted through a low resistance switch which can be opened.

| DEPT. RESP. | |
|---|---|
| ENGINEERING | |
| BASE INSTALLATIONS | |
| MANUFACTURING | |

Form 2-2052-100-14

11-15-61
8-31-61

ITEM NO. 7740

Description: continued

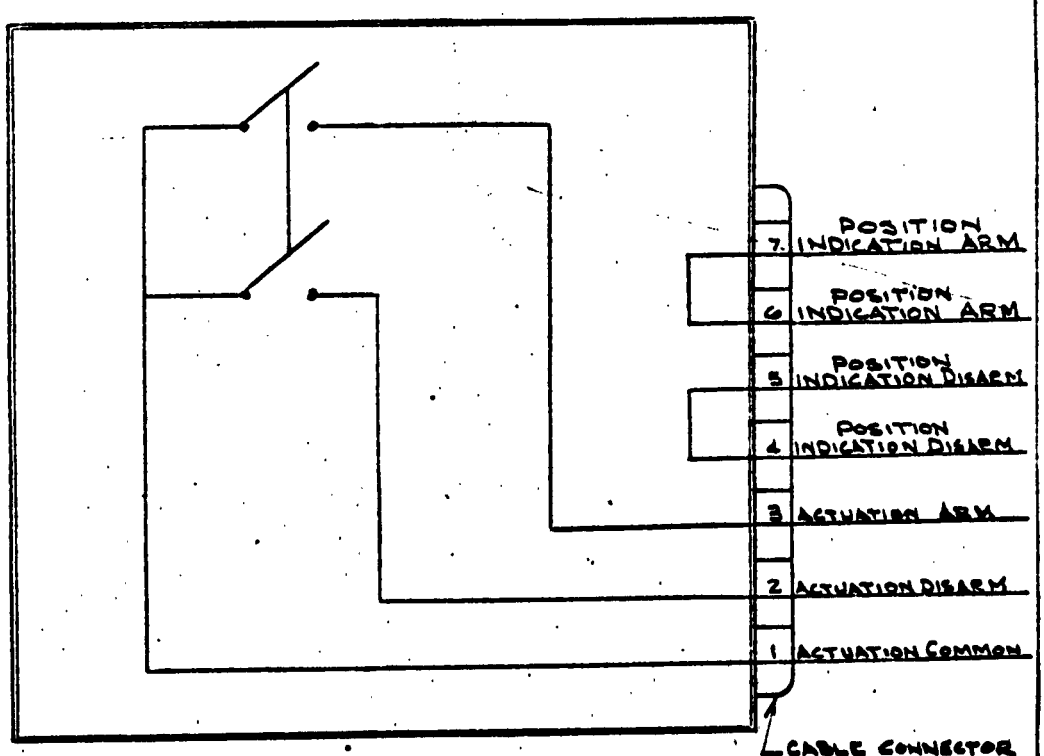


WIRING DIAGRAM – ORDNANCE
CABLE TEST BOX

7/21/61
MRM



11-15-61
8-31-61

362-A

| TYPE OF LIST | DATE |
|---|---|
| FACTORY SUPPORT EQUIPMENT | |
| Model Designation and Name of End Item<br>H&D SM-80 WEAPON SYSTEM | Revision No. and Date |

Contractor
BOEING

Contract No.
AF04(647)-580

Item No.
7741

Nomenclature
Hose Assembly, Cooling, G&C Section

Quantity

Total On Order

Estimated Production Lead Time

List Number

Manufacturer's Part Number

Specification No.

Specification Date

Description
Function
1. A requirement exists to provide coolant between the G&C Cooling System (MGE 3038) and the G&C Section in the G&C Test Position of the Component Processing Area.
2. Function in D2-11162 requiring this capability are: ¶ 1.3.2.

Description: The Hose Assembly, (Cooling, G&C Section) consists of a set of 2 cooling hoses, approximately 30 feet in length, equipped with the proper fittings at each end to connect the G&C Section with the G&C Cooling System (MGE 3038).

DEPT. RESP. - ENGR

| ENGINEERING | BASE INSTALLATIONS | MANUFACTURING |
|---|---|---|
| [signature] | [signature] | [signature] |

Form 2-2052-100-14
2-1-62
11-15-61
8-31-61

363

| TYPE OF LIST | DATE |
|---|---|
| FACTORY SUPPORT EQUIPMENT | October 12, 1961 |
| Model Designation and Name of End Item<br>H&D SM-80 WEAPON SYSTEM | Revision No. and Date |

**Contractor**
BOEING

**Contract No.**
AF04(647)-580

**Item No.**
7742

**Nomenclature**
Cable Assemblies, Interconnecting, NCU Linkage Adjustment, CPA

**Quantity**

**Total On Order**

**Estimated Production Lead Time**

**List Number**

**Manufacturer's Part Number**

**Specification No.**

**Specification Date**

**Description**

Function

1. A requirement exists to provide for interconnecting power cables and ground cables for the NCU linkage alignment test area in the CPA. These cables interconnect: 60 cycle junction box, power supplies, distribution box, test set (BGS 116), and NCU's. Ground cables connect equipment to equipment ground.
2. Functions in D2-11162 requiring this capability are: B3.1

Description

The cable assemblies consist of cables equipped with connectors at each end to mate with connectors on the associated equipment above. (See attached sketch.) For detail information see D2-12581.

Page 1 of 2

DEPT. RESP. - Project Engineering

| ENGINEERING | BASE INSTALLATIONS | MANUFACTURING |
|---|---|---|
| [signature] | [signature] | [signature] 10/13/61 |

Form 2-2052-100-14

11-15-61

D2-11162

APP. I | 891

366

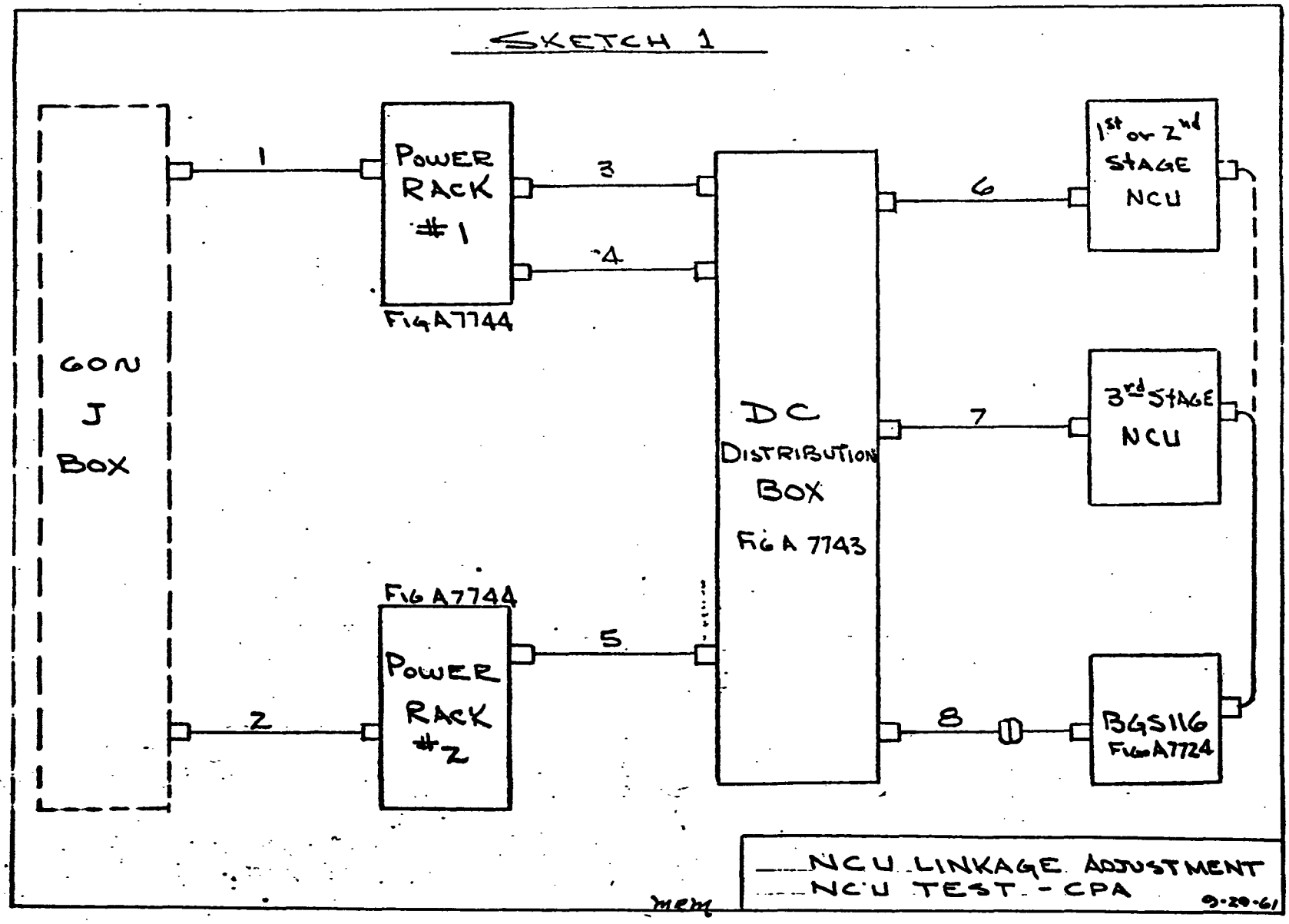


11-15-61

APP. I | D2-11162 | FSE ITEM 7742

392

| TYPE OF LIST<br>FACTORY SUPPORT EQUIPMENT | DATE<br>10-19-61 |
|---|---|
| Model Designation and Name of End Item<br>H&D SM-80 WEAPON SYSTEM | Revision No. and Date |
| Contractor<br>BOEING | |
| Contract No.<br>AF04(647)-580 | |
| Item No.<br>7743 | |
| Nomenclature<br>Distribution Box, NCU Linkage Adjustment, CPA | |
| Quantity<br>2 | |
| Total On Order | |
| Estimated Production Lead Time | |
| List Number | |
| Manufacturer's Part Number | |
| Specification No. | |
| Specification Date | |

**Description**

Function

1. A requirement exists to provide a distribution box for cable interconnections for the NCU linkage adjustment test site in the CPA. The distribution box interconnects cables, power supplies, test set (BGS 116) and the NCU's.

2. Functions in D2-11162 requiring this capability are: B3.1

Description

The distribution box is equipped with proper external receptacles, internal wiring, and terminal connectors to provide for cable interconnections. (See Figure A 7742 for diagram). Reference D2-12581. NOTE: This item is similar to Fig. A 7683; however, contains modifications required to adapt to the NCU linkage adjustment.

DEPT. RESP. - Project Engineering

| ENGINEERING | BASE INSTALLATIONS | MANUFACTURING |
|---|---|---|

Form 2-2052-100-14

2-1-62
11-15-61

| TYPE OF LIST | DATE |
|---|---|
| FACTORY SUPPORT EQUIPMENT | 10-19-61 |
| Model Designation and Name of End Item<br>H&D SM-80 WEAPON SYSTEM | Revision No. and Date |

**Contractor**
BOEING

**Contract No.**
AF04(647)-580

**Item No.**
7744

**Nomenclature**
Power Supply Group, NCU Linkage Adjustment, CPA

**Quantity**

**Total On Order**

**Estimated Production Lead Time**

**List Number**

**Manufacturer's Part Number**

**Specification No.**

**Specification Date**

**Description**

Function

1. A requirement exists for a DC power supply group to be used in the NCU linkage adjustment in the CPA.
2. Functions in D2-11162 requiring this capability are: B3.1

Description

The DC power supply group consists of transformer rectifier units, power switching panel, cooling blower and timer. (See Figure A 7742 for diagram). For detail information see D2-12581. Reference: Boeing specifications 10-20937-3, 10-20938-2.

NOTE: This power supply is similiar to Fig. A 7729; however, contains modifications required to adapt to NCU linkage adjustment.

| DEPT. RESP. - Project Engineering | | |
|---|---|---|
| ENGINEERING | BASE INSTALLATIONS | MANUFACTURING |

Form 2-2052-100-14

2-1-62
11-15-61

| TYPE OF LIST | DATE |
|---|---|
| FACTORY SUPPORT EQUIPMENT | 11-2-61 |
| Model Designation and Name of End Item<br>H&D SM-80 WEAPON SYSTEM | Revision No. and Date |

**Contractor**
BOEING

**Contract No.**
AF04(647)-580

**Item No.**
7745

**Nomenclature**
Bridle, Carriage, 1st Stage (Rocket Motor Truck)

**Quantity**

**Total On Order**

**Estimated Production Lead Time**

**List Number**

**Manufacturer's Part Number**

**Specification No.**

**Specification Date**

**Description**
Function

1. A requirement exists to transfer a single 1st stage rocket motor between fixed rails and the 1st stage rocket motor truck. A device is required to connect the front of the 1st stage rocket motor carriage to the portable rocket motor transfer winch cable.
2. The propulsive load must be transmitted from a point midway between the carriage support rails to the front of the 1st stage rocket motor carriage.
3. Functions in D2-11162 requiring this capability are: B2.2.1



Form 2-2052-100-14

DEPT. RESP. - Manufacturing Engineering

| ENGINEERING | BASE INSTALLATIONS | MANUFACTURING |
|---|---|---|
| | | |

11-15-61

Item No. 7745

Nomenclature: Bridle, Carriage, 1st Stage (Rocket Motor Truck)

Description:

The above requirements will be fulfilled by a bridle with suitable end fittings for attachment to the 1st stage rocket motor carriage and the portable rocket motor transfer winch cable. The bridle must be compatible with the equipment located in the forward end of the 1st stage rocket motor truck. (additional information will be supplied when study has been completed)

NOTE: For transfer of the 1st stage rocket motor between fixed rails and the 1st stage rocket motor truck, this bridle is used in conjunction with FSE 7689.

369

| TYPE OF LIST | DATE |
|---|---|
| FACTORY SUPPORT EQUIPMENT | 12-12-61 |
| Model Designation and Name of End Item<br>H&D SM-80 WEAPON SYSTEM | Revision No. C<br>and Date 7-6-62 |

Contractor
BOEING

Contract No.
AF04(647)-880

Item No.
7746

Nomenclature
SET, FAULT ISOLATION TOOLING

Quantity

Total On Order

Estimated Production Lead Time

List Number

Manufacturer's Part Number

Specification No.

Specification Date

Description

Function

1. A requirement exists for a means to check both items of airborne equipment which interface during assembly or installation at Air Force Plant 77 to determine which does not meet the drawing requirements should a misfit occur during the missile assembly in the MAB. The means will be required to check only those interface dimensions which cannot be checked conveniently and accurately with conventional measuring devices and methods.

2. Functions in D2-11162 requiring this capability are: B7.0, B9.0, B11.0

Description - This set consists of a number of tools each of which will be used to check a particular interface of an item of airborne equipment

Form 2-2052-100-14

Page 1 of 3

Department Responsible Manufacturing

| Engineering | Basic Installations | Facilities | Manufacturing |
|---|---|---|---|
| [signature] | [signature] | R Estep | A.E. [signature] 1-71 |

[signature] 7/5

8-17-62

REVISED

Nomenclature: Set, Interchangeability-Replaceability Checking Fixture

Description: Continued

The list of interfaces to be checked by the tools are as follows:

Angular Accelerometer to Interstage II-III

Interstage II-III to Angular Accelerometer

First Stage Rocket Motor to Section 49 Skirt

First Stage Rocket Motor to Section 49 Skirt &
Section 49 Skirt to First Stage Rocket Motor

First Stage Rocket Motor to Section 47 Interstage

First Stage Rocket Motor to Section 47 Interstage &
Section 47 Interstage to First Stage Rocket Motor

Second Stage Rocket Motor to Section 47 Interstage

Second Stage Rocket Motor to Section 47 Interstage &
Section 47 Interstage to Second Stage Rocket Motor

Second Stage Rocket Motor to Section 45 Interstage

Second Stage Rocket Motor to Section 45 Interstage &
Section 45 Interstage to Second Stage Engine

Third Stage Rocket Motor to Section 45 Interstage

Third Stage Rocket Motor to Section 45 Interstage &
Section 45 Interstage to Third Stage Rocket Motor

Third Stage Rocket Motor to Section 42 G&C

Third Stage Rocket Motor to Section 42 G&C &
Section 42 G&C to Third Stage Rocket Motor

Heat Protection to NCU - First Stage & NCU to
Heat Protection - First Stage

Heat Protection to NCU - Second Stage & NCU to
Heat Protection - Second Stage

Heat Protection to NCU - Third Stage & NCU to
Heat Protection - Third Stage

Interstage to frame to strut to heat deflector support Sec. 47

Interstage to frame to strut to heat deflector support Sec. 45

Guide G&C support structure to interstage Sec. 47

Guide G&C support structure to interstage Sec. 45

Required for Wing II only.

FSE NO. 7746 Description (Continued)

NCU to First Stage Rocket Motor

First Stage Rocket Motor to NCU

NCU to Second Stage Rocket Motor

Second Stage Rocket Motor to NCU

NCU to Third Stage Rocket Motor

Third Stage Rocket Motor to NCU

Raceway Cap and Chute to Skirt

Skirt to Raceway Cap & Chute

Raceway Cap and Chute to Section 47 Aft

Section 47 Aft to Raceway Cap and Chute

Raceway Cap and Chute to Section 47 Fwd.

Section 47 Fwd. to Raceway Cap and Chute

Raceway Cap and Chute to Section 45 Aft

Section 45 Aft to Raceway Cap and Chute

Raceway Cap and Chute to Section 45 Fwd.

Section 45 Fwd. to Raceway Cap and Chute

Raceway Cap and Chute to 3rd Stage Rocket Motor

First Stage Engine to Raceway Cover

Raceway Cover to Second Stage Rocket Motor

Second Stage Rocket Motor to Raceway Cover

Raceway Cover to Third Stage Rocket Motor

Third Stage Rocket Motor to Raceway Cover

For detailed description of the tools see Drawing 21-51991.

372

| TYPE OF LIST | DATE |
|---|---|
| FACTORY SUPPORT EQUIPMENT | 3-9-62 |
| Model Designation and Name of End Item<br>H&D SM-80 WEAPON SYSTEM | Revision No. and Date |

Contractor
BOEING

Contract No.
AF04(647)-580

Item No.
7748

Nomenclature
Test Adapter Cable, Stage I, NCU Model P70B

Quantity

Total On Order

Estimated Production Lead Time

List Number

Manufacturer's Part Number

Specification No.

Specification Date

Description

Function

1. The requirement exists to provide an electrical connection between cable number W031 of Figure A 7719 and the Stage I NCU P70B as installed on the missile.

2. The function in D2-11162 requiring this capability is B6.1.

Description:

The cable assembly will consist of one cable of the appropriate length with connector BAC C45FC28B06P3 on one end and amphenol 200X-368-1 on the other. The interface with the NCU shall be shown on ICD 25-26431.

DEPT. RESP. - Engr.

| ENGINEERING | BASE INSTALLATIONS | MANUFACTURING |
|---|---|---|
| H.D. Barton | [illegible] | R.E. Greiser [illegible] |

Form 2-2052-100-14

Added

6-11-62

BOEING D2-11162

APP. I. 96d

| TYPE OF LIST | DATE |
|---|---|
| FACTORY SUPPORT EQUIPMENT | 9-5-62 |
| Model Designation and Name of End Item<br>H&D SM-80 WEAPON SYSTEM | Revision No. and Date |

Contractor
BOEING

Contract No.
AF04(647)-580 (CCP 798)

Item No.
7750

Nomenclature
Cable, Alarm Set Charging

Quantity

Total On Order

Estimated Production Lead Time

List Number

Manufacturer's Part Number 29-25265-1

Specification No.

Specification Date

Description

Function:

1. A requirement exists for a means to supply commercial 110 volt 60 cycle single phase ac power to the battery charger (part of: Figure A 4187, MRCN 7787 & MRCN 7788) for charging the batteries of the Alarm Set (Figure A 4187, MRCN 7787 & MRCN 7788). Battery charging is required at the maintenance area when the Alarm Set is returned from use in the field and at the Associate Rocket Motor Contractor's plants prior to rocket motor shipments.
2. Function in D2-11162 requiring this capability is 14.1 Function in D2-11162-1 requiring this capability is 13.1.

Description:

The cable assembly shall consist of three conductors, two used for the 110 volt power supply and one for the ground lead, with a Pyle-National

Department Responsible
Engineering
Manufacturing

Form 2-2052-100-14

FACTORY SUPPORT EQUIPMENT

ITEM 7750

NOMENCLATURE: Cable, Alarm Set Charging

Description: Continued

7-pin female connector on one end to mate with the battery-battery charger (Part of: Figure A 4187, MRCN 7787 & MRCN 7788) and a Standard Hubble 3-pin male connector on the other end to mate with a facility provided 110 volt 60 cycle, single phase AC power outlet. The grounding conductor shall be split into two leads at the Pyle-National connector end, one to be connected to the battery-battery charger case (part of: Figure A 4187, MRCN 7787 & MRCN 7788) and the other to the recorder case (part of: Figure A 4187, MRCN 7787 & MRCN 7788).

375

R

DEPT. RESP. - Project Engineering

| ENGINEERING | BASE INSTALLATIONS | MANUFACTURING |
|---|---|---|

| TYPE OF LIST | DATE |
|---|---|
| FACTORY SUPPORT EQUIPMENT | 3-15-61 |
| Model Designation and Name of End Item<br>H&D SM-80 WEAPON SYSTEM | Revision No. and Date<br>7-07-61 |

Contractor
BOEING

Contract No.
AF04(647)-580

Item No.
7753

Nomenclature
Highway Transporter - Engine Stage I

Quantity

Total On Order

Estimated Production Lead Time

List Number

Manufacturer's Part Number 25-15779

Specification No.

Specification Date

Description

Function

R 1. A requirement exists for a transportation vehicle to transport the stage I engine by highway from the Engine Associate to Plant 77 and support the engine for transfer to Engine Storage Building. The vehicle must be compatible with the Transport Monitor System.

R 2. For a detail technical specification see D10-20437 (Rear Carriage) and D10-20452 (Container) and D2-5879 (Tractor)

Description

R The transporter is a semi-trailer with integral rails compatible with the engine harness. The trailer shall be equipped with King pin,

(Continued on next page)

376

11-15-61
8-31-61

FACTORY SUPPORT EQUIPMENT

BOEING

AF04(647)-580

Item No. 7753

Nomenclature - Highway Transporter - Engine Stage I

Description

shock mount devices to isolate the engine from shock, environmental control and engine tie-downs. Included shall be provisions for attaching transfer equipment.

11-15-61
8-31-61

DEPT. RESP. - MANUFACTURING | BASE INSTALLATIONS | ENGINEERING

| TYPE OF LIST | DATE |
|---|---|
| FACTORY SUPPORT EQUIPMENT | 3-15-61 |
| Model Designation and Name of End Item H&D SM-80 WEAPON SYSTEM | Revision No. and Date 7-07-61 |

Contractor
BOEING

Contract No.
AF04(647)-580

Item No.
7754

Nomenclature
Highway Transporter - Engine Stage II

Quantity

Total On Order

Estimated Production Lead Time

List Number

Manufacturer's Part Number 25-20426-1

Specification No.

Specification Date

Description

1. A requirement exists for a transportation vehicle to transport the engine by highway from the Engine Associate to Plant 77, and support the engine for transfer to Engine Storage Building. The vehicle must be capable to be compatible with the Transport Monitor System.

2. For a detailed Technical Criteria see D2-7107 (Van) and D2-7108 (Truck)

Description

The transporter is a multi-axle truck van with rails compatible with the engine harness. The van is equipped with environmental control,

(Continued on next page)

11-15-61
8-31-61

FACTORY SUPPORT EQUIPMENT

AF04(647)-580

Item No. 7754

Nomenclature - Highway Transporter - Engine Stage II

Description

R shock mount devices to isolate the engine from shock, and engine tie downs. Include provisions for attaching transfer equipment.

| TYPE OF LIST<br>FACTORY SUPORT EQUIPMENT | DATE<br>3-15-61 |
|---|---|
| Model Designation and Name of End Item<br>H&D SM-80 WEAPON SYSTEM | Revision No. and Date 8-29-61 |
| Contractor<br>BOEING | |
| Contract No.<br>AF04(647)-580 | |
| Item No.<br>7756 | |
| Nomenclature<br>Rail Assembly, Bridge, Engine Transfer | |
| Quantity | |
| Total On Order | |
| Estimated Production Lead Time | |
| List Number | |
| Manufacturer's Part Number 25-17299 | |
| Specification No. | |
| Specification Date | |

Description
Function

1. A requirement exists for a means to connect Engine Transporter Rails and MCAT Rails with Storage Rails during transfer of Engines into and out of Engine Storage Buildings. The same requirement exists fe engine transfers at the Missile Assembly Building. The device must be capable to support engines and their harnesses during transi operation.
2. Functions in D2-11162 requiring this capability are: B2.2, B4.2

DEPT. RESP. - Engineering

| ENGINEERING | BASE INSTALLATIONS | MANUFACTURING |
|---|---|---|
| [illegible] | [illegible] 8-29-1 | [illegible] 8/30/1 |

Form 2-2052-100-14

11-15-61
8-31-61

08E

R



Item No. 7756

Nomenclature: Rail Assembly, Bridge, Engine Transfer

R Description:

Rail assembly consists of a set of rigidly supported guide rails with attaching provisions on each end, compatible with Engine Harness v-groove wheels, vehicle rails, Engine Storage rails and joining rails. Grounding jumpers shall be provided on each end.

Approx. length- 4 feet.

A locking device shall be incorporated for safety reasons.

11-15-61
8-31-61

188

| TYPE OF LIST<br>FACTORY SUPPORT EQUIPMENT | DATE |
|---|---|
| Model Designation and Name of End Item<br>H&D SM-80 WEAPON SYSTEM | Revision No. and Date |
| Contractor<br>BOEING | |
| Contract No.<br>AF 04(647)-580 | |
| Item No.<br>7760 | |
| Nomenclature<br>Pulley Bracket Assembly-Transporters, Stage II & III | |
| Quantity | |
| Total On Order | |
| Estimated Production Lead Time | |
| List Number | |
| Manufacturer's Part Number 25-20209 | |
| Specification No. | |
| Specification Date | |

DEPT. RESP.
ENGINEERING | BASE INSTALLATIONS | MANUFACTURING

Description

Function

1) A requirement exists for a removable pulley bracket assembly used during engine transfer operations.

2) Functions in D2-11162 requiring this capability are B2.2

Description

A pulley bracket assembly shall be used with engine transporters, Stage II and Stage III. This assembly consists of a suitable bracket, holding two 6" diameter sheaves.

Continued on Page 2

Form 2-2052-100-14

11-15-61
8-31-61

TYPE OF LIST: FSE

CONTRACTOR: BAC

ITEM NO. 7760

NOMENCLATURE: Pulley Bracket Assembly-Transporters, Stage II & III

DESCRIPTION: (Continued)

This pulley bracket assembly is mounted at the forward L. H. Side on the outside of the transporter-container. It fits into a suitable bracket.

During Engine loading operations, the pulley bracket assembly will act as the pivot, transmitting transfer forces from engine harness to the transporter-container via a 1/2" dia. cable.

During engine unloading operations, the cable running over the sheaves will act as the restraining force, holding the engine harness back.

A suitable storage container shall be provided to store assembly when not in use. Approximate size of container: 15" Long X 6" Wide X 8" High

Approximate weight: 35 lbs. (loaded)

383

DEPT. RESP. - MANUFACTURING | BASE INSTALLATIONS | ENGINEERING

| | |
|---|---|
| TYPE OF LIST<br>FACTORY SUPPORT EQUIPMENT | DATE<br>3-15-61 |
| Model Designation and Name of End Item<br>H&D SM-80 WEAPON SYSTEM | Revision No. and Date 7-07-61 |
| Contractor<br>BOEING | |
| Contract No.<br>AF04(647)-580 | |
| Item No.<br>7762 | |
| Nomenclature<br>Highway Transporter - Engine Stage III | |
| Quantity | |
| Total On Order | |
| Estimated Production Lead Time | |
| List Number | |
| Manufacturer's Part Number 25-20427-1 | |
| Specification No. | |
| Specification Date | |

Description

Function

R 1. A requirement exists for a transportation vehicle to transport the Stage III engine by highway from the Engine Associate to Plant 77, and support the engine for transfer to Engine Storage Building. The vehicle must be compatible with the Transport Monitor System.

R 2. For a detail Technical Criteria see D2-7107 and D2-7108.

Description

R The transporter is a multi-axle truck van with integral rails compatible with the engine harness. The van shall be equipped with environmental control, shock mount devices to isolate the engine from shock and

(Continued on next page)

11-15-61
8-31-61

FACTORY SUPPORT EQUIPMENT

BOEING

AF04(647)-580

Item No. 7762

Nomenclature - Highway Transporter - Engine Stage III

Description:
engine tie downs. Included shall be provisions for attaching transfer equipment.

11-15-61
8-31-61

385

| TYPE OF LIST<br>FACTORY SUPPORT EQUIPMENT | DATE<br>11/10/61 |
|---|---|
| Model Designation and Name of End Item<br>H&D SM-80 WEAPON SYSTEM | Revision No. and Date |
| Contractor<br>BOEING | |
| Contract No.<br>AF04(647)-580 | |
| Item No.<br>7780 | |
| Nomenclature<br>Test Fixture, Power Supply, MAB and CPA | |
| Quantity | |
| Total On Order | |
| Estimated Production Lead Time | |
| List Number | |
| Manufacturer's Part Number | |
| Specification No. | |
| Specification Date | |

**Description**

Function

1. A requirement exists to test the operation of the power supplies in the MAB and CPA Buildings before the power supplies are integrated into missile component test positions.
2. Functions in D2-11162 requiring this capability are: C8.2, C9.2

Description

1. The test fixture contains indicating lights, switches, test points, and cables which are necessary to operationally test the power supplies and switching racks.

NOTE: A 5 ampere power supply is required which operates in conjunction with the above test fixture. (See ACO 4127)

DEPT. RESP. - Engineering

| ENGINEERING | BASE INSTALLATIONS | MANUFACTURING |
|---|---|---|
| | | |

Form 2-2052-100-14

2-1-62
11-15-61

386

| TYPE OF LIST | DATE |
|---|---|
| FACTORY SUPPORT EQUIPMENT | 11-22-61 |
| Model Designation and Name of End Item<br>H&D SM-80 WEAPON SYSTEM | Revision No. and Date |

Contractor
BOEING

Contract No.
AF04(647)-580

Item No.
7781

Nomenclature
Test Fixture, Drawer Tester, Missile Checkout Console

Quantity

Total On Order

Estimated Production Lead Time

List Number

Manufacturer's Part Number

Specification No.

Specification Date

Description

Function

1. A requirement exists for a test fixture which will test drawers of the Missile Checkout Console. The test fixtures allow the drawers to be tested to a card level.

2. Functions in D2-11162 requiring this capability are: D1.1

Description

The test set consists of test plugs, switches, lights, push buttons, drawer extenders, and card extenders.

See Document D2-10123, Volume II for details of test fixtures.

DEPT. RESP.
ENGINEERING | BASE INSTALLATIONS | MANUFACTURING

387

Department Responsible Engineering

Engineering | Basic Installations | Facilities | Manufacturing

| | |
|---|---|
| TYPE OF LIST<br>Factory Support Equipment | DATE 7-20-62 |
| Model Designation and Name of End Item<br>H&D SM-80 WEAPON SYSTEM | Revision No. and Date |
| Contractor<br>Boeing | |
| Contract No. AF04(647)-580 (ECP 178 R1) | |
| Item No. 7787 | |
| Nomenclature<br>Alarm Set, Transit Status, First Stage Motor | |
| Quantity | |
| Total On Order | |
| Estimated Production Lead Time | |
| List Number | |
| Manufacturer's Part Number 26-15085 | |
| Specification No. | |
| Specification Date | |

Description
Function:

1. A requirement exists to sense, record and display the number of times an out of tolerance condition of temperature and shock environment occurs to a first Stage Rocket Motor during transportation and handling. (The out of tolerance conditions require equipment capability to sense, record, and display the total number of occurences. At levels of 1g, 2g and 3g and temperature occurences falling below 60°F, 40°F and 32°F or rising above 100°F, 120°F and 130°F).

2. Functions in D2-11162 requiring this capability are: B2.2, B4.2
Functions in D2-11162-1 requiring this capability are: B2.2, B4.2

Form 2-2052-100-14



8-17-62

REVISED

BOEING

NO D2-11162

PAGE 109

Factory Support Equipment
Item No. 7787
Nomenclature: Alarm Set, Transit Status, First Stage Motor

Descriptions:

The set shall consist of the following:

a. An Alarm Set, Missile Storage - Transit Status, Part Number 16191 (one 10-20496-1 and one 10-20496-4).

b. Temperature Transducer Belt Assembly, Part Number 25-36376.

c. Miscellaneous Standard Mounting Hardware to be utilized in mounting the equipment contained in the Alarm Set to the First Stage Rocket Motor Carriage (Figure A 4078) and First Stage Rocket Motor Horizontal Restraint Ring (MRCN 7763), and the temperature Transducer Belt Assembly to the First Stage Rocket Motor (MRCN 6801 or 6802).

| TYPE OF LIST<br>Factory Support Equipment | DATE<br>7-20-62 |
|---|---|
| Model Designation and Name of End Item<br>H&D SM-80 WEAPON SYSTEM | Revision No. and Date |

Contractor
Boeing

Contract No.
AF04(647)-580 (ECP 178 R1)

Item No.
7788

Nomenclature
Alarm Set, Transit Status, Third Stage Motor

Quantity

Total On Order

Estimated Production Lead Time

List Number

Manufacturer's Part Number 26-15087

Specification No.

Specification Date

Description
Function:

1. A requirement exists to sense, record and display the number of times an out of tolerance condition of temperature and shock environment occurs to a Third Stage Rocket Motor during transportation and handling. (The out of tolerance conditions requires equipment capability to sense, record and display the total number of occurences at levels of 1g, 2g, and 3g and temperature occurences falling below 60°F, 40°F and 32°F or rising above 100°F, 120°F and 130°F).

2. Functions in D2-11162 requiring this capability are: B2.2, B4.2
Functions in D2-11162-1 requiring this capability are: B2.2, B4.2

Department Responsible Engineering

| Engineering | Basic Installations | Facilities | Manufacturing |
|---|---|---|---|
| [illegible] | [illegible] | [illegible] | [illegible] |

Form 2-2052-100-14

Page 1 of 2

8-17-62

REVISED

Factory Support Equipment
Item No. 7788
Nomenclature: Alarm Set, Transit Status, Third Stage Motor



Description:

The Set shall consist of the following:

a. An Alarm Set, Missile Storage-Transit Status, Part Number 16191 (one 10-20496-1 and one 10-20496-4).

b. Temperature Transducer Support Assembly, Part Number 25-30978.

c. Miscellaneous Standard Mounting Hardware to be utilized in mounting the equipment contained in the Alarm Set to the Third Stage Rocket Motor Carriage (Figure A 4121) and Third Stage Rocket Motor Horizontal Restraint Ring (MRCN 7765), and the temperature Transducer Support Assembly to the Third Stage Rocket Motor (MRCN 6401 or 6402).

168

| TYPE OF LIST | DATE |
|---|---|
| FACTORY SUPPORT EQUIPMENT | 9-18-62 |
| Model Designation and Name of End Item: E&D SM-80 WEAPON SYSTEM | Revision No. and Date: A |

Contractor: OOAMA

Contract No.:

Item No.: 7789

Nomenclature: Device - Restraint, 1st Stage Rocket Motor

Quantity:

Total On Order:

Estimated Production Lead Time:

List Number:

Manufacturer's Part Number: 62 K 31127

Specification No.:

Specification Date:

Description: Function:

1. A requirement exists for a means to restrain the 1st stage rocket motor when located in its handling carriage on fixed rails.

2. The function in D2-11162 requiring this capability are: B2.2 B13.0

3. The functions in D2-11162-1 requiring this capability are: B2.2 B12.0

Description:

This device consists of a yoke which fits over the rocket motor and attaches to its carriage. Impaling knives are housed in containers mounted on each side of the yoke and have cable lanyards which attach to the fixed rail support. Should the motor ignite, the forward thrust of the motor will cause the impalers to puncture the motor

Department Responsible: Engineering — Basic Installations — Facilities — Manufacturing

Form 2-2052-100-14

FACTORY SUPPORT EQUIPMENT

ITEM No. 7789

Nomenclature: Device - Restraint, 1st Stage Rocket Motor

Description: (cont'd)

case and render the motor non-propulsive.

Note: This device is designed and built by OOAMA at Hill AFB, Ogden, Utah and is provided to Plant 77 for their use.

393

Department Responsible: Engineering | Basic Installations | Facilities | Manufacturing

| TYPE OF LIST | DATE |
|---|---|
| FACTORY SUPPORT EQUIPMENT | 9-18-62 |
| Model Designation and Name of End Item: H&D SM-80 WEAPON SYSTEM | Revision No. and Date: A 9-10-62 |
| Contractor: OOAMA | |
| Contract No. | |
| Item No. 7790 | |
| Nomenclature: Device - Restraint, 2nd Stage Rocket Motor | |
| Quantity | |
| Total On Order | |
| Estimated Production Lead Time | |
| List Number | |
| Manufacturer's Part Number 62 K31128 | |
| Specification No. | |
| Specification Date | |

Description

Function:

1. A requirement exists for a means to restrain the 2nd stage rocket motor when located in its handling carriage on fixed rails.

2. The function in D2-11162 requiring this capability are: B2.2 B13.0

3. The functions in D2-11162-1 requiring this capability are: B2.2 B12.0

Description:

This device consists of a yoke which fits over the rocket motor and attaches to its carriage. Impaling knives are housed in containers

Form 2-2052-100-14

FACTORY SUPPORT EQUIPMENT

ITEM No. 7790

Nomenclature: Device - Restraint, 2nd Stage Rocket Motor

Description: (cont'd)

mounted on each side of the yoke and have cable lanyards which attach to the fixed rail support. Should the motor ignite, the forward thrust of the motor will cause the impalers to puncture the motor case and render the motor non-propulsive.

Note: This device is designed and built by OOAMA at Hill AFB, Ogden, Utah and is provided to Plant 77 for their use.

Department Responsible

Engineering | Basic Installations | Facilities | Manufacturing

| TYPE OF LIST<br>FACTORY SUPPORT EQUIPMENT | DATE<br>9-18-62 |
|---|---|
| Model Designation and Name of End Item<br>H&D SM-80 WEAPON SYSTEM | Revision No. and Date |
| Contractor<br>OOAMA | |
| Contract No. | |
| Item No.<br>7791 | |
| Nomenclature<br>Device - Restraint, 3rd Stage Rocket Motor | |
| Quantity | |
| Total On Order | |
| Estimated Production Lead Time | |
| List Number | |
| Manufacturer's Part Number 62J 31129 | |
| Specification No. | |
| Specification Date | |

Description

Function:

1. A requirement exists for a means to restrain the 3rd stage rocket motor when located in its handling carriage on fixed rails.

2. The function in D2-11162 requiring this capability are: B2.2 B13.0

3. The functions in D2-11162-1 requiring this capability are: B2.2 B12.0

Description:

This device consists of a yoke which fits over the rocket motor and attaches to its carriage. Impaling knives are housed in containers

Form 2-2052-100-14

FACTORY SUPPORT EQUIPMENT

ITEM No. 7791

Nomenclature: Device - Restraint, 3rd Stage Rocket Motor

Description: (cont'd)

mounted on each side of the yoke and have cable lanyards which attach to the fixed rail support. Should the motor ignite, the forward thrust of the motor will cause the impalers to puncture the motor case and render the motor non-propulsive.

Note: This device is designed and built by OOAMA at Hill AFB, Ogden, Utah and is provided to Plant 77 for their use.

| TYPE OF LIST | DATE |
|---|---|
| FACTORY SUPPORT EQUIPMENT | 11-9-62 |
| Model Designation and Name of End Item<br>H&D SM-80 WEAPON SYSTEM | Revision No. and Date |
| Contractor<br>BOEING | |
| Contract No.<br>AF04(647)-580 | |
| Item No.<br>7793 | |
| Nomenclature<br>SPACER BRACKET, STAGE II NCU | |
| Quantity | |
| Total On Order | |
| Estimated Production Lead Time | |
| List Number | |
| Manufacturer's Part Number | |
| Specification No. | |
| Specification Date | |

Description

Function:

1. A requirement exists for a spacer bracket which will secure the NCU in an elevated position above the Nozzle Control Unit Fixture allowing for the installation and use of the Stage II NCU Alignment Gage for NCU linkage adjustments in the CPA.

2. Function in D2-11162 and D2-11162-1 requiring this capability is B3.1.1.

Description

A tubular box frame with four quick release pins for attachment to the NCU and four quick release pins for attachment to the NCU Fixture.

This item is designed and fabricated at Plant 77.

Form 2-2052-100-14 Page 1 of 2

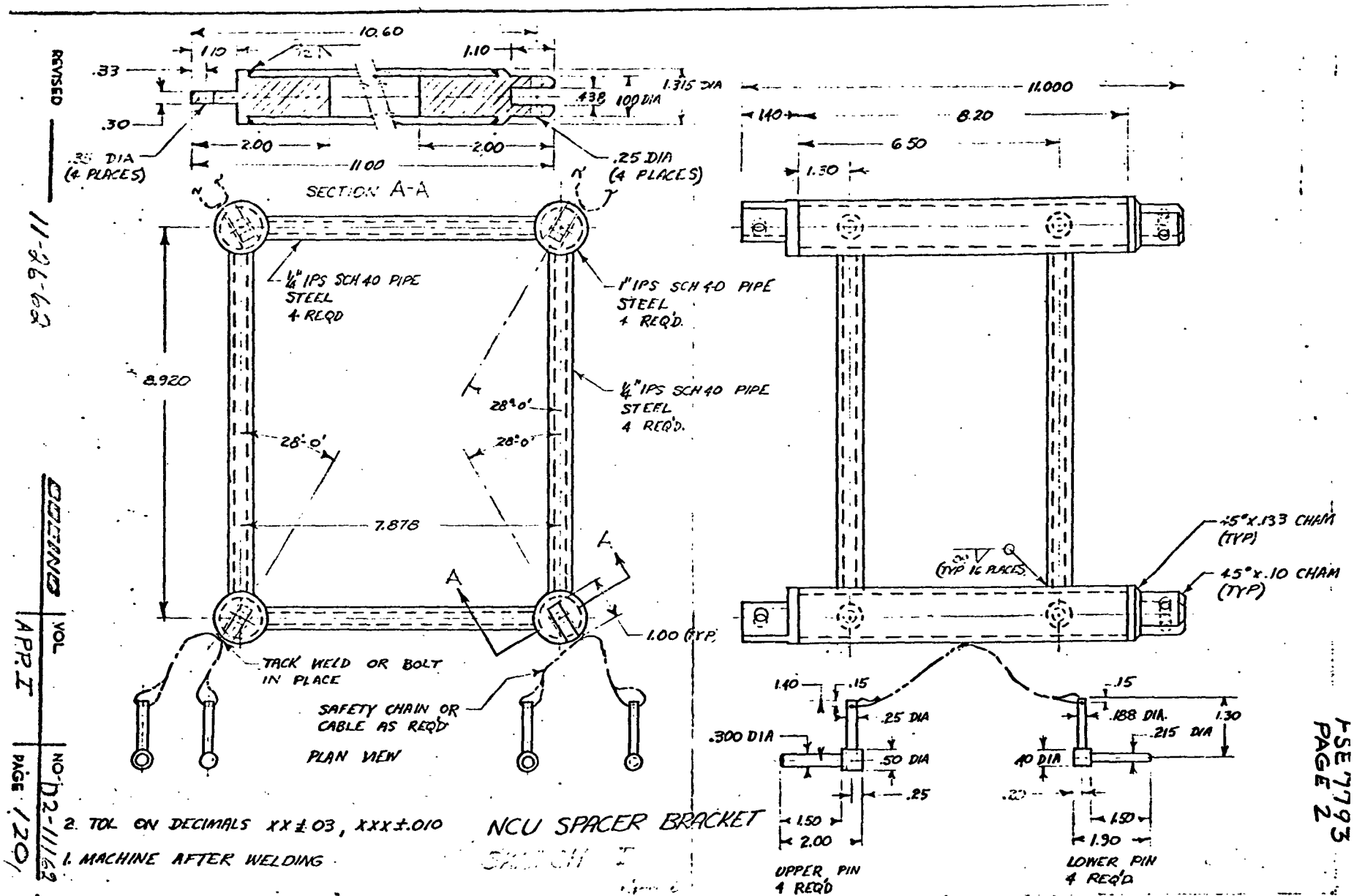


2. TOL ON DECIMALS XX ± .03, XXX ± .010

1. MACHINE AFTER WELDING

NCU SPACER BRACKET

SKETCH I

REVISED 11-26-62

BOEING | VOL | NO. D2-11162

APP. I | PAGE 120

FSE 7793
PAGE 2

399

**BOEING AIRPLANE COMPANY**

NUMBER D2-11162 MODEL NO. WS-133A

TITLE ASSEMBLY AND CHECKOUT EQUIPMENT REQUIREMENT FORMS - SPECIAL FACILITIES CONTRACT EQUIPMENT (SFC)

Plant 77

PREPARED BY Requirements Unit 5-15-61

SUPERVISED BY [signature] 5/16/61

APPROVED BY [signature] 9-12-61

Approved by W.N. Charlot (DATE) 9-11-61

5-78200-5120-68145

CHARGE NUMBER

REVISED 11-15-61 8-31-61 MAY 15 1961

SECTION TITLE PAGE

VOL. | NO. D2-11162

SEC APP. II | PAGE 1

BAC 4131 B

2-7000

# ACTIVE-CHANGED PAGE

| ACTIVE | | | CHANGED | | | | | |
|---|---|---|---|---|---|---|---|---|
| SECTION | PAGE | DATE | SECTION | PAGE REVISED | PAGE ADDED | PAGE DELETED | DATE |
| APP II | 1 | 11-15-61 | APP II | COMPLETE REVISION | | | 8-31-61 |
| | 2 | 1-11-63 | | | 36 | | |
| | 3 | 2-1-62 | | | 37 | | |
| | 3a | 6-1-62 | APP II | | 38 | | 8-31-61 |
| | 3b | | | | | | |
| | 3c | | | | | | |
| | 3d | 6-1-62 | APP II | COMPLETE REVISION | | | 11-15-61 |
| | 4 | 2-1-62 | | | 39 | | |
| | 5 | | | | | | |
| | 6 | | | | | | |
| | 7 | | | | | | |
| | 8 | | | | | | |
| | 9 | | | | | | |
| | 10 | | APP II | | 61 | | 11-15-61 |
| | 11 | | | | | | |
| | 12 | | | | | | |
| | 13 | | APP II | 2 | | 60 | 2-1-62 |
| | 14 | | | 3 | | 61 | |
| | 15 | | | THRU | | | |
| | 16 | | | 49 | | | |
| | 17 | | | 51 | | | |
| | 18 | | | 52 | | | |
| | 19 | | | | | | |
| | 20 | | | 54 | | | |
| | 21 | | APP II | 56 | | | |
| | 22 | | | 57 | | | 2-1-62 |
| | 23 | | | | | | |
| | 24 | | APP II | 2 | 3a | 54 | 6-1-62 |
| | 25 | | | 31 | 3b | 55 | |
| | 26 | | | 32 | 3c | 56 | |
| | 27 | | | 33 | 3d | 57 | |
| | 28 | 2-1-62 | | 34 | 28a | 58 | |
| | 28a | 6-1-62 | | 35 | 31a | 59 | |
| | 29 | 2-1-62 | | | 32a | | |
| | 30 | 2-1-62 | | 45 | 32b | | |
| | 31 | 6-1-62 | | 46 | 34a | | |
| | 31a | | | 47 | 34b | | |
| | 32 | | | 48 | 34c | | |
| | 32a | | | | 34d | | |
| | 32b | | | 49 | 35a | | |
| | 33 | | | 50 | 35b | | |
| | 34 | | | 51 | 35c | | |
| | 34a | | | 52 | 35d | | |
| | 34b | | | 53 | 35e | | |
| | 34c | | | | 35f | | |
| | 34d | | | | 35g | | |
| | 35 | | | | 35h | | |
| | 35a | | | | 35i | | |
| | 35b | 6-1-62 | | | 35j | | |
| | 35c | 8-17-62 | | | | | |
| | 35d | 8-17-62 | | | | | |
| | 35e | 6-1-62 | | | | | |
| APP II | 35f | 6-1-62 | APP II | | 35j | | 6-1-62 |

| ACTIVE | | | CHANGED | | | | | |
|---|---|---|---|---|---|---|---|---|
| SECTION | PAGE | DATE | SECTION | PAGE REVISED | PAGE ADDED | PAGE DELETED | DATE |
| APP II | 35f-1 | 6-1-62 | APP II | | 35k | | 6-1-62 |
| | 35g | | | | 35l | | |
| | 35h | | | | 35m | | |
| | 35i | | | | 35n | | |
| | 35j | | | | 35o | | |
| | 35k | | | | 35p | | |
| | 35l | | | | 35q | | |
| | 35m | | | | 35r | | |
| | 35n | | | | 35s | | |
| | 35o | | | | 35t | | |
| | 35p | | | | 35u | | |
| | 35q | | | | 36a | | |
| | 35r | 6-1-62 | | | 36b | | |
| | 35r-1 | 8-17-62 | | | 36c | | |
| | 35r-2 | 9-14-62 | | | 36d | | |
| | 35r-3 | 9-14-62 | | | 36e | | |
| | 35r-4 | 1-11-63 | | | 36f | | |
| | 35r-5 | 1-11-63 | | | 39a | | |
| | 35r-6 | 1-11-63 | | | 41a | | |
| | 35r-7 | 1-11-63 | | | 43a | | |
| | 35-S | 6-1-62 | | | 48a | | |
| | 35T | 6-1-62 | | | 48b | | |
| | 35U | 6-1-62 | APP II | | 48c | | 6-1-62 |
| | 36 | 2-1-62 | | | | | |
| | 36a | 6-1-62 | APP II | 2 | 35r-1 | | 7-13-62 |
| | 36b | | | | | | |
| | 36c | | APP II | 2 | | | 8-17-62 |
| | 36d | | | 35c | | | |
| | 36e | | APP II | 35d | 35r-2 | | |
| | 36f | 6-1-62 | | 35r-1 | 35r-3 | | 8-17-62 |
| | 37 | 2-1-62 | | | | | |
| | 38 | 2-1-62 | APP II | 2 | | | 9-14-62 |
| | 39 | 2-1-62 | | 35r-2 | | | |
| | 39a | 6-1-62 | APP II | 35r-3 | | | |
| | 40 | 2-1-62 | | | | | 9-14-62 |
| | 41 | 2-1-62 | | | | | |
| | 41a | 6-1-62 | APP II | 2 | 35f-1 | | 1-11-63 |
| | 42 | 2-1-62 | | | 35r-4 | | |
| | 43 | 2-1-62 | | | 35r-5 | | |
| | 43a | 6-1-62 | | | 35r-6 | | |
| | 44 | 2-1-62 | | | 35r-7 | | |
| | 45 | 6-1-62 | APP II | | | | 1-11-63 |
| | 46 | | | | | | |
| | 47 | | | | | | |
| | 48 | | | | | | |
| APP II | 48a | | | | | | |
| | 48b | | | | | | |
| | 48c | | | | | | |
| | 49 | | | | | | |
| | 50 | | | | | | |
| | 51 | | | | | | |
| | 52 | | | | | | |
| | 53 | 6-1-62 | | | | | |

See revision description page, preceding Document Table of Contents

REVISED 1-11-63

MAY 15 1961

U3 4286 1000 (MAR 1960)

BOEING | VOL. | NO. D2-11162

SEC. APP II | PAGE 2

## APPENDIX II

The following Assembly and Checkout forms for the Special Facility Contract items, Overhead items, and the Maintenance Ground Equipment (MGE) used at Air Force Plant 77 as Assembly and Checkout equipment are included for information.

# WS 133A
# ASSEMBLY & CHECKOUT EQUIPMENT REQUIREMENTS

ACO NUMBER 253
APPROVAL DATE 4-13-62
REVISION _____ DATE _____

EQUIPMENT TITLE: Cable, Rocket Motor Bonding
(Basic Noun First)

RESPONSIBLE DEPT. BI-MM
EQUIP. CLASSIFICATION SFC/OH
DESIGN RQMTS DOCUMENT None
DWG NO. N. A
TO BE USED AT:

| BASE | MAFB | EAFB | VAFB | STP III | PLT 77 | | | |
|---|---|---|---|---|---|---|---|---|
| DOC | D2-7648 | D2-7648 | D2-7871 | D2-9942 | D2-11162 | | | |
| | | | | | X | | | |

PURPOSE & JUSTIFICATION:
A requirement exists to provide a means of electrically bonding the 1st, 2nd, and 3rd Stage Rocket Motor Carriages together to prevent an electrical potential difference between rocket motors when roll transferred in a train using Fig. A 7691.

DESCRIPTION, REQUIREMENTS & RECOMMENDATIONS:
It is recommended that an electrical bonding cable assembly with alligator clips be provided. The assembly shall consist of wire with a maximum resistance of 0.7 ohms per 1000 ft. at 20° C; this is equivalent to BMS 13-5D Type I, Class A, Size 8 wire.

(NOTE: This item may be fabricated locally from expendable materials. The item shall be fabricated per BAC process specifications.)

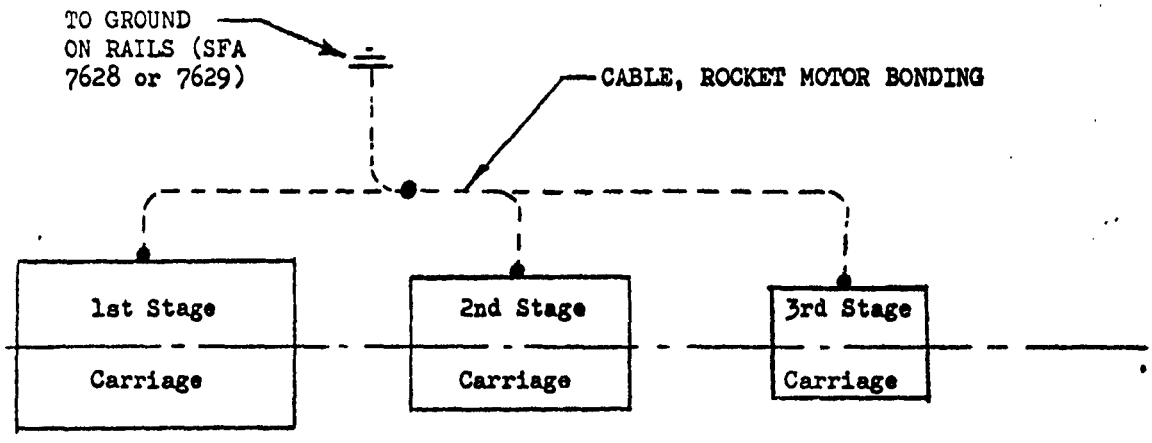


PLAN VIEW

SHT 1 OF 1

| ENGINEERING DEPT. | BASE INSTALLATION DEPT. | MANUFACTURING DEPT. |
|---|---|---|
| | | |

ORIGINATING GROUP SUPERVISOR: O. A. Severide
TELEPHONE: 5-7022

NOTE: Use form LS-4071-1000 if additional sheets are required.

2-6340-0-1 6-1-62
REV.

# WS 133A
# ASSEMBLY & CHECKOUT EQUIPMENT REQUIREMENTS

ACO NUMBER 267
APPROVAL DATE 4-27-62
REVISION _____ DATE _____

EQUIPMENT TITLE: Set, Connector
(Basic Noun First)

RESPONSIBLE DEPT. BI-MM
EQUIP. CLASSIFICATION SFC/OH
DESIGN RQMTS DOCUMENT None
DWG NO. N. A.
TO BE USED AT:

| BASE | MAFB | EAFB | VAFB | STP III | PLT 77 | | | |
|---|---|---|---|---|---|---|---|---|
| DOC | D2-7648 | D2-7648 | D2-7871 | D2-9942 | D2-11162 | | | |
| | | | | | X | | | |

PURPOSE & JUSTIFICATION: During integration of the NCU Test Position, consisting of Stage I, Stage II, and Stage III Test Stations in the MAB, it is necessary to connect the NCU Test Cables to Laboratory Test equipment in this NCU Test Position (Reference D2-11162, Section C, paragraph 9.3.1). This particular Test Position requires the use of three (3) items: (a) Multimeter (Figure "A" 4001)
(b) Amphenol 200X-230-71 Connector
(c) Amphenol 200X-368-2 Connector
to breakout test points without probing connectors on the equipment.

NOTE: Use form U3-4071-1000 if additional sheets are required.

DESCRIPTION, REQUIREMENTS & RECOMMENDATIONS:

Figure "A" 4001 Multimeter, above, has already been provided. However, the two (2) Amphenol Connectors have not yet been provided. This ACO will furnish one (1) each of the following items:

Amphenol 200X-230-71 Connector, complete with all applicable pins and inserts.

Amphenol 200X-368-2 Connector, complete with all applicable pins and inserts.

These connectors have a dual purpose during the tests:

1. They will provide mechanical protection of the NCU Cable Plugs.
2. They will provide more accessible points for monitoring voltage during continuity testing.

One (1) set of these connectors will suffice for the enitre MAB complex at AF Plant 77. No optional items may be substituted.

ORIGINATING GROUP SUPERVISOR D. L. Madison
TELEPHONE: AM-0464

SHT 1 OF 1

| ENGINEERING DEPT. | BASE INSTALLATION DEPT. | MANUFACTURING DEPT. |
|---|---|---|
| | | |

2-6340-0-1 6-1-62
REV.

-404

# WS 133A
# ASSEMBLY & CHECKOUT EQUIPMENT REQUIREMENTS

ACO NUMBER 268
APPROVAL DATE
REVISION DATE

EQUIPMENT TITLE: Tape Perforator and Verifier
(Basic Noun First)

RESPONSIBLE DEPT. BI-MM
EQUIP. CLASSIFICATION SFC/OH

DESIGN RQMTS DOCUMENT
DWG NO.

TO BE USED AT:

| BASE | MAFB | EAFB | VAFB | STP III | PLT 77 | | | |
|---|---|---|---|---|---|---|---|---|
| DOC | D2-7648 | D2-7648 | D2-7871 | D2-9942 | D2-11162 | | | |
| | | | | | X | | | |

NOTE: Use form U3-4071-1000 if additional sheets are required.

PURPOSE & JUSTIFICATION:

A means is required to perforate and verify programming tapes which are to be used for programming the C89, C90, and C91 in the Component Processing Area during G&C Section, Angular Accelerometer, and Nozzle Control Unit Testing.

DESCRIPTION, REQUIREMENTS & RECOMMENDATIONS:

A tape perforator and verifier shall be provided capable of perforating binary code with three operating positions as follows:

Manual
Reproduce
Compare

It is recommended that a Tally Model 150 or equivalent tape perforator and verifier be utilized.

ORIGINATING GROUP SUPERVISOR: O. A. Severide
TELEPHONE: 5-5022

SHT 1 OF 1

| ENGINEERING DEPT. | BASE INSTALLATION DEPT. | MANUFACTURING DEPT. |
|---|---|---|
| | | |

2-6340-0-1
REV. 6-1-62

50H

# WS 133A

## ASSEMBLY & CHECKOUT EQUIPMENT REQUIREMENTS

ACO NUMBER 273

APPROVAL DATE

REVISION DATE

EQUIPMENT TITLE Recording Station
(Basic Noun First)

RESPONSIBLE DEPT. BI-MM

EQUIP. CLASSIFICATION SFC/OH

DESIGN REQMTS DOCUMENT

DWG NO.

TO BE USED AT:

| BASE | MAFB | EAFB | VAFB | STP III | PLT 77 | | | |
|---|---|---|---|---|---|---|---|---|
| DOC | D2-7648 | D2-7648 | D2-7871 | D2-9942 | D2-11162 | | | |
| | | | | | X | | | |

NOTE: Use form U3-4271-1000 if additional sheets are required

PURPOSE & JUSTIFICATION

To be used during installation, checkout, integration, and maintenance of the G&C Test Group, C-89 (ACO 0622); Ground Electronic System Test Group, C-90 (ACO 0623); Programming Test Set, C-91 (ACO 0624) in the composite test position of the CPA.

DESCRIPTION, REQUIREMENTS & RECOMMENDATIONS:

The recording station shall consist of an eight channel recorder plus the appropriate preamplifiers and isolation transformer. It is recommended that a Sanborn 8-channel recorder, Model 858-5460; 8 preamplifiers, Sanborn Model 850-1300B; and a 15 amp 115 volt 60 cycle capacity isolation transformer, United Transformer Corp. Model R77 be used.

ORIGINATING GROUP SUPERVISOR: O. A. Severide

TELEPHONE: 5-5022

SHT 1 OF 1

| ENGINEERING DEPT. | BASE INSTALLATION DEPT. | MANUFACTURING DEPT. | FACILITIES DEPT. |
|---|---|---|---|
| | | | |

2-6340-0-1 6-1-62
REV.

904

WS 133A
ASSEMBLY & CHECKOUT
EQUIPMENT REQUIREMENTS

ACO NUMBER ACO-308
APPROVAL DATE 6-23-61
REVISION A DATE 8-29-61

EQUIPMENT TITLE: Manometer, Inclined

RESPONSIBLE DEPT. BI-MM EQUIP. CLASSIFICATION SFC/OH
DESIGN RQMTS DOCUMENT None DWG NO. None
TO BE USED AT:

| BASE | MAFB | EAFB | VAFB | STP III | PLT 77 | | | |
|---|---|---|---|---|---|---|---|---|
| DOC | D2-7648 | D2-7648 | D2-7871 | D2-9942 | D2-11162 | | | |
| | X | X | X | X | X R | | | |

PURPOSE:

To assist in the adjustment of the cooling air flow to the electronic racks in the LF & LCF by recording the static pressure in the cooling air ducts atop each rack.

A requirement also exists to record the static pressure tests to the inlet cooling air for the C89 Test Group, C90 Test Group and C91 Test Set at Plant 77. R

DESCRIPTION:

A standard inclined water manometer with a scale reading of 0-6 inches accurate to ± 0.01 inches. R

SHT 1 OF 1

| ENGINEERING DEPT. | BASE INSTALLATION DEPT. | MANUFACTURING DEPT. |
|---|---|---|
| [signature] | [signature] 8-29-61 | [signature] 8/30/1 |

2-6340-0-1
REV. 11-15-61
2-1-62

R

LOH

WS 133A

ASSEMBLY & CHECKOUT

EQUIPMENT REQUIREMENTS

ACO NUMBER 323

APPROVAL DATE August 4, 1961

REVISION _____ DATE _____

EQUIPMENT TITLE: Tester, Transistor

RESPONSIBLE DEPT. Base Installations EQUIP. CLASSIFICATION SFC/OH

DESIGN RQMTS DOCUMENT None DWG NO. N/A

TO BE USED AT:

| BASE | MAFB | EAFB | VAFB | STP III | PLT 77 | | | |
|---|---|---|---|---|---|---|---|---|
| DOC | D2-7648 | D2-7648 | D2-7871 | D2-9942 | D2-11162 | | | |
| | | | | | X | | | |

PURPOSE:

To provide a means to measure the characteristics of a transistor and to determine if a transistor, N.P.N or P.N.P., is sub-standard. This instrument will be used on both Mobile Radio and Closed Circuit Television Systems.

DESCRIPTION:

The tester will measure the ICBO (Collector to Base Leakage current), the current gain, and determine whether or not the transistor under test has opened or shorted.

Recommend Hickok-Model 850A, or equivalent.

SHT 1 OF 1

| ENGINEERING DEPT. | BASE INSTALLATION DEPT. | MANUFACTURING DEPT. |
|---|---|---|
| J. P. Severide | R. E. Collins | [illegible] |

2-6340-0-1
REV. 11-15-61
2-1-62

BOEING | NO. D2-11162

80h

WS 133A
ASSEMBLY & CHECKOUT
EQUIPMENT REQUIREMENTS

ACO NUMBER 324
APPROVAL DATE August 4, 1961
REVISION _____ DATE _____

EQUIPMENT TITLE: Test Set, Multipurpose Portable Radio

RESPONSIBLE DEPT. Base Installations EQUIP. CLASSIFICATION SFC/OH
DESIGN RQMTS DOCUMENT None DWG NO. N/A
TO BE USED AT:

| BASE | MAFB | EAFB | VAFB | STP III | PLT 77 | | | |
|---|---|---|---|---|---|---|---|---|
| DOC | D2-7648 | D2-7648 | D2-7871 | D2-9942 | D2-11162 | | | |
| | | | | | X | | | |

PURPOSE:

This test set will be used; as an AC voltmeter, to measure a receiver's 20 db quieting sensitivity, for IF peaking, to check activity of crystals between 280 KCPS and 13 MCPS, as a speaker to permit audio reception, as a field intensity meter, and as an RF Wattmeter.

DESCRIPTION:
A battery operated, transistorized portable test set with a calibrated AC and DC meter.

| | |
|---|---|
| Meter full scale accuracy is: | ± 2% |
| AC Voltemeter Ranges: | 0-0.2V and 0-2V |
| Frequency Response: | ±1db from 35 to 50,000 CPS. |
| Input Impedance: | 400 K ohms on 2 volt range<br>40 K ohms on 0.2 volt range |
| Stability: | ± db from 022° F to 113° F. |

Recommend Motorola Portable Test Set - Model TU 546, or equivalent.

SHT 1 OF 1

| ENGINEERING DEPT. | BASE INSTALLATION DEPT. | MANUFACTURING DEPT. |
|---|---|---|
| J. A. Severide | R. E. Callaway | Bert Preiser |

2-6340-0-1
REV. 11-15-61
2-1-62

60h

WS 133A

# ASSEMBLY & CHECKOUT EQUIPMENT REQUIREMENTS

ACO NUMBER 325
APPROVAL DATE August 4, 1961
REVISION _____ DATE _____

EQUIPMENT TITLE: Generator, Signal (Frequency Modulation)

RESPONSIBLE DEPT. Base Installations EQUIP. CLASSIFICATION SFC/OH
DESIGN RQMTS DOCUMENT _____ DWG NO. NA
TO BE USED AT:

| BASE | MAFB | EAFB | VAFB | STP III | PLT 77 | | | |
|---|---|---|---|---|---|---|---|---|
| DOC | D2-7648 | D2-7648 | D2-7871 | D2-9942 | D2-11162 | | | |
| | | | | | X | | | |

PURPOSE:

To provide a means of checking; receiver sensitivity, discriminator slope, audio recovery and audio output, and I. F. strip for defective stages. Other purposes are, to supply I. F. frequencies for alignment, provide accurately metered increments of carrier frequency, and to provide other frequency modulated signals using external source.

DESCRIPTION:

| | |
|---|---|
| Accuracy: | ± 0.5% |
| Tuning: | Vernier Tuning with dial having 100 divisions. |
| R.F. Range: | 140 MC to 175 MC |
| R.F. Output: | Output voltage is continuously variable from 0.1 microvolts to 100,000 microvolts, and is calibrated from -8 to -128 dbm. |
| Modulation: | A modulating signal producing 0 to 15 KCPS deviation. |
| I. F. Range: | 4 ranges 2.9-4.2, 4.1-610, 6.8-9.4 and 69.0-76.0 MC. |
| I. F. Output: | Maximum output voltage is greater than 0.5 volts into a 50 ohm resistive load. |

Recommend Motorola F.M. Signal Generator-Model T1034-A, or equivalent.

SHT 1 OF 1

| ENGINEERING DEPT. | BASE INSTALLATION DEPT. | MANUFACTURING DEPT. |
|---|---|---|
| [illegible] | [illegible] | [illegible] |

2 6310 0-1
REV. 11-15-61
2-1-62

014

# WS 133A
# ASSEMBLY & CHECKOUT
# EQUIPMENT REQUIREMENTS

ACO. NUMBER 326
APPROVAL DATE 8-4-61
REVISION _____ DATE _____

EQUIPMENT TITLE: Generator, Video Sweep to 20 Megacycles

RESPONSIBLE DEPT. BID EQUIP. CLASSIFICATION SFC/OH
DESIGN RQMTS DOCUMENT None DWG NO. NA
TO BE USED AT:

| BASE | MAFB | EAFB | VAFB | STP III | PLT 77 | | | |
|---|---|---|---|---|---|---|---|---|
| DOC | D2-7648 | D2-7648 | D2-7871 | D2-9942 | D2-11162 | | | |
| | | | | | X | | | |

PURPOSE:

To provide a signal for obtaining the frequency response curve of video amplifiers on an oscilloscope for alignment and testing purposes.

DESCRIPTION:

A video sweep generator that will cover the whole video band in one sweep. In conjunction with an oscilloscope, it will display the frequency response curve of video amplifiers, as well as provide markers at several frequencies for identification purposes.

| | |
|---|---|
| R. F. Output: | 0.2V rms into nominal 70 ohms. Flat within ±0.5 db over widest sweep width. |
| Sweep Rate: | Variable around 60 CPS; locks to line frequency |
| Markers: | Sharp, Pulse-Type, crystal-positioned markers; usable singly or collectively. |
| Marker Amplitude: | Positive pulse, continuously variable, zero to 5 volts approximately. |

Recommend Kay Electric Corporation, Marka-Sweep Model Video, Catalog #150-B, or equivalent.

SHT 1 OF 1

| ENGINEERING DEPT. | BASE INSTALLATION DEPT. | MANUFACTURING DEPT. |
|---|---|---|
| O. A. Severide | R. C. Calling | [illegible] |

2-6340-0-1
REV. 11-15-61
2-1-62

114

WS 133A

# ASSEMBLY & CHECKOUT EQUIPMENT REQUIREMENTS

ACO NUMBER 327
APPROVAL DATE 8-4-61
REVISION _____ DATE _____

EQUIPMENT TITLE: Tester, Vacuum Tube (Mutual Conductance Type)

RESPONSIBLE DEPT. BID EQUIP. CLASSIFICATION SFC/OH
DESIGN RQMTS DOCUMENT None DWG NO. N/A
TO BE USED AT:

| BASE | MAFB | EAFB | VAFB | STP III | PLT 77 | | | |
|---|---|---|---|---|---|---|---|---|
| DOC | D2-7648 | D2-7648 | D2-7871 | D2-9942 | D2-11162 | | | |
| | | | | | X | | | |

PURPOSE:

This tester provides a means to determine if a given vacuum tube is either up to or below a fixed standard. This instrument will be used on the Mobile Radio and Closed Circuit Television Systems.

DESCRIPTION:

The tester shows that a vacuum tube is shorted, opened, or compares either favorably or unfavorably with the mutual conductance of a nominal standard.

Recommend Hickok - Model 539-B, or equivalent.

SHT 1 OF 1

| ENGINEERING DEPT. | BASE INSTALLATION DEPT. | MANUFACTURING DEPT. |
|---|---|---|
| [signature] | [signature] | [signature] |

2-6340-0-1
REV. 11-15-61
2-1-62

K

WS 133A

ASSEMBLY & CHECKOUT

EQUIPMENT REQUIREMENTS

ACO NUMBER 328

APPROVAL DATE 8-4-61

REVISION _____ DATE _____

EQUIPMENT TITLE: Microphone

RESPONSIBLE DEPT BID

EQUIP. CLASSIFICATION SFC/OH

DESIGN RQMTS DOCUMENT None

DWG NO. N/A

TO BE USED AT:

| BASE | MAFB | EAFB | VAFB | STP III | PLT 77 | | | |
|---|---|---|---|---|---|---|---|---|
| DOC | D2-7648 | D2-7648 | D2-7871 | D2-9942 | D2-11162 | | | |
| | | | | | X | | | |

PURPOSE:

This microphone will be used when bench testing radio equipment.

DESCRIPTION:

A dynamic transistorized microphone using "talking current" as a power source for the built-in transistorized amplifier.

Output impedance: 500 ohms

The control switch is a "push-to-talk" type.

Recommend Motorola Transistorized Mobile Dynamic Microphone - TU 351A, or equivalent.

SHT 1 OF 1

| ENGINEERING DEPT. | BASE INSTALLATION DEPT. | MANUFACTURING DEPT. |
|---|---|---|
| J. A. Sevarde | R C Collins | Bert Preiser |

2-6340-0-1
REV. 11-15-61
2-1-62

E/H

WS 133A
ASSEMBLY & CHECKOUT
EQUIPMENT REQUIREMENTS

ACO NUMBER 330
APPROVAL DATE 8-4-61
REVISION _____ DATE _____

EQUIPMENT TITLE: Chart, EIA Resolution (Initial Retma Linearity Chart).

RESPONSIBLE DEPT. BID EQUIP. CLASSIFICATION SFC/OH
DESIGN RQMTS DOCUMENT None DWG NO. N/A
TO BE USED AT:

| BASE | MAFB | EAFB | VAFB | STP III | PLT 77 | | | |
|---|---|---|---|---|---|---|---|---|
| DOC | D2-7648 | D2-7648 | D2-7871 | D2-9942 | D2-11162 | | | |
| | | | | | X | | | |

PURPOSE:

This chart provides a target consisting of lines, circles, and numbers of known pattern, for a television camera to focus on. From this, the linearity circuits in the camera and the monitor can be aligned, by insuring that the objects on the chart are clear, in focus and with no distortion.

DESCRIPTION:

A paper or cardboard chart with lines, circles, and numbers in black and white.

SHT 1 OF 1

| ENGINEERING DEPT. | BASE INSTALLATION DEPT. | MANUFACTURING DEPT. |
|---|---|---|
| J. A. Lawrence | H. E. Glen | Bert Preiser |

2-6340-0-1
REV. 11-15-61
2-1-62

HH

WS 133A
ASSEMBLY & CHECKOUT
EQUIPMENT REQUIREMENTS

ACO NUMBER 331
APPROVAL DATE 8-4-61
REVISION _____ DATE _____

EQUIPMENT TITLE: Wattmeter, R. F.

RESPONSIBLE DEPT. BID
EQUIP. CLASSIFICATION SFC/OH
DESIGN RQMTS DOCUMENT None
DWG NO. N/A
TO BE USED AT:

| BASE | MAFB | EAFB | VAFB | STP III | PLT 77 | | | |
|---|---|---|---|---|---|---|---|---|
| DOC | D2-7648 | D2-7648 | D2-7871 | D2-9942 | D2-11162 | | | |
| | | | | | X | | | |

PURPOSE:

To provide a means of measuring radio transmitter output power.

DESCRIPTION:

| | |
|---|---|
| Frequency Range: | Approximately 150 MC to 180 MC |
| Power Range: | 0 to 50 watts |
| Impedance: | 50 ohms |
| Accuracy: | 5% of full scale |
| VSWR: | Not greater than 1.05 |

Recommend Bird 43 R. F. Wattmeter, or equivalent.

SHT 1 OF 1

| ENGINEERING DEPT. | BASE INSTALLATION DEPT. | MANUFACTURING DEPT. |
|---|---|---|
| D. A. Swende | H. E. Glen | [illegible] |

2-6340-0-1
REV. 11-15-61
2-1-62

WS 133A

# ASSEMBLY & CHECKOUT EQUIPMENT REQUIREMENTS

ACO NUMBER 332
APPROVAL DATE 8-4-61
REVISION _____ DATE _____

EQUIPMENT TITLE: Monitor, Radio Station (Frequency Modulation)

RESPONSIBLE DEPT. BID EQUIP. CLASSIFICATION SFC/OH
DESIGN RQMTS DOCUMENT None DWG NO. N/A
TO BE USED AT:

| BASE | MAFB | EAFB | VAFB | STP III | PLT 77 | | | |
|---|---|---|---|---|---|---|---|---|
| DOC | D2-7648 | D2-7648 | D2-7871 | D2-9942 | D2-11162 | | | |
| | | | | | X | | | |

PURPOSE:

To provide a means of monitoring, the RF carrier displacement, modulation deviation, relative signal strength, and indicate "carrier-on" conditions. Another purpose of the monitor is to provide a speaker for listening to remote radio units.

DESCRIPTION:

The F. M. Station Monitor will; read directly the R. F. carrier displacement from assigned center freqeuncy, measure modulation deviation, meter relative signal strength, monitor aural communications with a speaker, and indicate "carrier-on" conditions. The monitor must be compatible with radio equipment transmitting between 152 to 174 megacycles.

Recommend Motorola F. M. Station Monitor - Model T1130A, or equivalent.

SHT 1 OF 1

| ENGINEERING DEPT. | BASE INSTALLATION DEPT. | MANUFACTURING DEPT. |
|---|---|---|
| | | |

2-6340-0-1
REV. 11-15-61
2-1-62

91h

WS 133A

# ASSEMBLY & CHECKOUT EQUIPMENT REQUIREMENTS

ACO NUMBER 334
APPROVAL DATE 8-4-61
REVISION _____ DATE _____

EQUIPMENT TITLE: Load, Dummy

RESPONSIBLE DEPT. BID
EQUIP. CLASSIFICATION SEC/OH
DESIGN RQMTS DOCUMENT None
DWG NO. N/A
TO BE USED AT:

| BASE | MAFB | EAFB | VAFB | STP III | PLT 77 | | | |
|---|---|---|---|---|---|---|---|---|
| DOC | D2-7648 | D2-7648 | D2-7871 | D2-9942 | D2-11162 | | | |
| | | | | | X | | | |

PURPOSE:

To provide a means of simulating a radio antenna when measuring transmitter output power, or when trouble-shooting the transmitter.

DESCRIPTION:

This is a device which is capable of dissipating 60 watts for R. F. power, through a frequency range of 150 MC to 180 MC.

Recommend Motorola Dummy Load-Model P7208, or equivalent.

SHT 1 OF 1

| ENGINEERING DEPT. | BASE INSTALLATION DEPT. | MANUFACTURING DEPT. |
|---|---|---|
| [illegible] | H. E. [illegible] | [illegible] |

2-6340-0-1
REV. 11-15-61
2-1-62

WS 133A

ASSEMBLY & CHECKOUT

EQUIPMENT REQUIREMENTS

ACO NUMBER 335

APPROVAL DATE 8-4-61

REVISION _____ DATE _____

EQUIPMENT TITLE: Probe, Detector Attenuator

RESPONSIBLE DEPT. BID

EQUIP. CLASSIFICATION SFC/OH

DESIGN RQMTS DOCUMENT None

DWG NO. N/A

TO BE USED AT:

| BASE | MAFB | EAFB | VAFB | STP III | PLT 77 | | | |
|---|---|---|---|---|---|---|---|---|
| DOC | D2-7648 | D2-7648 | D2-7871 | D2-9942 | D2-11162 | | | |
| | | | | | X | | | |

PURPOSE:

To provide a means of measuring a voltage which is greater than the maximum voltage an oscilloscope can display without distortion. This instrument is used with the television camera and television monitor.

DESCRIPTION:

A probe which has designed into it, a 10:1 attenuator and a frequency compensation adjustment.

Recommend Tektronix Detector Probe - Model PR500CF, or equivalent.

SHT 1 OF 1

| ENGINEERING DEPT. | BASE INSTALLATION DEPT. | MANUFACTURING DEPT. |
|---|---|---|
| O. A. Swaride | H. E. Glen | [illegible] |

2-6340-0-1
REV. 11-15-61
2-1-62

81h

WS 133A
ASSEMBLY & CHECKOUT
EQUIPMENT REQUIREMENTS

ACO NUMBER 336
APPROVAL DATE 8-4-61
REVISION _____ DATE _____

EQUIPMENT TITLE: Probe, High Voltage D. C.

RESPONSIBLE DEPT. BID EQUIP. CLASSIFICATION SEC/OH
DESIGN RQMTS DOCUMENT None DWG NO. N/A
TO BE USED AT:

| BASE | MAFB | EAFB | VAFB | STP III | PLT 77 | | | |
|---|---|---|---|---|---|---|---|---|
| DOC | D2-7648 | D2-7648 | D2-7871 | D2-9942 | D2-11162 | | | |
| | | | | | X | | | |

PURPOSE:

To provide a means to measure the high voltage on television picture tubes (approximately 25 KV DC) for purposes of trouble-shooting.

DESCRIPTION:

A high input impedance voltage divider probe, which is an accessory to the vacuum tube voltmeter.

| | |
|---|---|
| Accuracy: | 5% |
| Division Ratio: | 100:1 |
| Input Impedance: | 12,000 Meg Ohms |
| Maximum Voltage: | 30 KV DC |
| Maximum Current Drain: | 2.5 micro amps |

Recommend Hewlett-Packard - Model 459A DC Voltage Divider Probe to be used in conjunction and as an accessory of the Hewlett-Packard - Model 410B Vacuum Tube Voltmeter, or equivalent.

SHT 1 OF 1

| ENGINEERING DEPT. | BASE INSTALLATION DEPT. | MANUFACTURING DEPT. |
|---|---|---|
| C. A. Swerride | H. E. Glen | [illegible] |

2-6340-0-1
REV. 11-15-61
2-1-62

b 8 1/1

# WS 133A
# ASSEMBLY & CHECKOUT
# EQUIPMENT REQUIREMENTS

ACO NUMBER 337
APPROVAL DATE 8-4-61
REVISION A DATE 10-26-61

EQUIPMENT TITLE: Voltmeter, Vacuum Tube
(Basic Noun First)

RESPONSIBLE DEPT. BID EQUIP. CLASSIFICATION SFC/OH
DESIGN RQMTS DOCUMENT none DWG NO. N/A
TO BE USED AT:

| BASE | MAFB | EAFB | VAFB | STP III | PLT 77 | | | |
|---|---|---|---|---|---|---|---|---|
| DOC | D2-7648 | D2-7648 | D2-7871 | D2-9942 | D2-11162 | | | |
| | X | X | X | | X | | | |

NOTE: Use form U3-4071-1000 if additional sheets are required.

PURPOSE & JUSTIFICATION:

To provide a means to measure resistance, AC and DC voltages. Used to measure power supply output voltage while trouble shooting.

Used for testing of HF/UHF Radio System at CSA.

DESCRIPTION, REQUIREMENTS & RECOMMENDATIONS:

| | | |
|---|---|---|
| Ranges: | AC | 1 to 300 volts AC, full scale in 6 ranges |
| | DC | 1 to 1000 volts DC, full scale in 7 ranges |
| | Ohms | Mid-Scale reading of 10,000, 1K, 10K, 100K, and 10M ohms |
| Accuracy: | DC | 3% full scale all ranges |
| | Ohms | 1 ohm at mid-scale of R X 1 Range 5% at mid-scale of all other ranges |
| | AC | 3% full scale 60 cps to 400 mc |
| Input Impedance | DC | Approximately 122 M ohms |
| | AC | at 50 Kcps, approximately 2.35 M ohms |

Recommend Hewlett-Packard - Model 410B or equivalent.

ORIGINATING GROUP SUPERVISOR: J. Berger
TELEPHONE: 5-4281

SHT 1 OF 1

| ENGINEERING DEPT. | BASE INSTALLATION DEPT. | MANUFACTURING DEPT. |
|---|---|---|
| M. H. Bastoa | [illegible] | A. E. Preiser |

2-6340-0-1
REV. 11-15-61
2-1-62

WS 133A

# ASSEMBLY & CHECKOUT EQUIPMENT REQUIREMENTS

ACO NUMBER 345
APPROVAL DATE 8/25/61
REVISION _____ DATE _____

EQUIPMENT TITLE: Power Supply, Type 128, Tektronixs

RESPONSIBLE DEPT. Base Installations EQUIP. CLASSIFICATION SEC/OH
DESIGN RQMTS DOCUMENT None DWG NO. None
TO BE USED AT:

| BASE | MAFB | EAFB | VAFB | STP III | PLT 77 | | | |
|---|---|---|---|---|---|---|---|---|
| DOC | D2-7648 | D2-7648 | D2-7871 | D2-9942 | D2-11162 | | | |
| | | | | | X | | | |

PURPOSE:

To supply DC power to the Detection Probe P500C to checkout TV Monitor System.

DESCRIPTION:

A power supply unit Model Type 128 with power requirements 105 V to 125 V or 210 V to 250 V, 50-60 cycle, 25 watts is recommended.

Power Supply Unit shall have DC output voltage + 120 V regulated at 25 ma, + 6.3 V unregulated at 150 ma.

Dimensions are approximately 4 3/4" wide, 7 3/4" high, 9 " over all depth, weight is six pounds.

SHT 1 OF 1

| ENGINEERING DEPT. | BASE INSTALLATION DEPT. | MANUFACTURING DEPT. |
|---|---|---|
| [illegible] | H. E. [illegible] 8/25 | [illegible] 8/25/61 |

2-6340-0-1
REV. 11-15-61
2-1-62

WS 133A

ASSEMBLY & CHECKOUT

EQUIPMENT REQUIREMENTS

ACQ NUMBER 347

APPROVAL DATE 9-8-61

REVISION _____ DATE _____

EQUIPMENT TITLE: AMMETER 500 AMPS

RESPONSIBLE DEPT. BID

EQUIP. CLASSIFICATION SFC/OH

DESIGN RQMTS DOCUMENT NONE

DWG NO. NONE

TO BE USED AT:

| BASE | MAFB | EAFB | VAFB | STP III | PLT 77 | | | |
|---|---|---|---|---|---|---|---|---|
| DOC | D2-7648 | D2-7648 | D2-7871 | D2-9942 | D2-11162 | | | |
| | | | | | X | | | |

PURPOSE:

To measure the Power Supply Current in the MAB and CPA under No-Load to Full Load conditions. Full load condition is about 350 amps.

DESCRIPTION:

An Ammeter capable of measuring up to 500 amps.

The following is recommended or the equivalent of:

A Weston, Model 901, P/N 2904001 with Ammeter Shunt Model 9992 P/N 0025251 and Ammeter Leads Model 9958 P/N 004516.

SHT 1 OF 1

| ENGINEERING DEPT. | BASE INSTALLATION DEPT. | MANUFACTURING DEPT. |
|---|---|---|
| [signature] 9/8 | [signature] 9/8/61 | [signature] |

2-6340-0-1
REV. 11-15-61
2-1-62

12h

R

WS 133A

# ASSEMBLY & CHECKOUT EQUIPMENT REQUIREMENTS

ACO NUMBER 350
APPROVAL DATE 9-8-61
REVISION _____ DATE _____

EQUIPMENT TITLE: TELEVISION MONITOR, CLOSED CIRCUIT

RESPONSIBLE DEPT. BID EQUIP. CLASSIFICATION SFC/OH
DESIGN RQMTS DOCUMENT NONE DWG NO. NONE
TO BE USED AT:

| BASE | MAFB | EAFB | VAFB | STP III | PLT 77 | | | |
|---|---|---|---|---|---|---|---|---|
| DOC | D2-7648 | D2-7648 | D2-7871 | D2-9942 | D2-11162 | | | |
| | | | | | X | | | |

PURPOSE:

To allow visual remote monitoring of the missile during test.

DESCRIPTION:

A closed circuit television system consisting of (2) two T. V. cameras, one at each end of MAB, two T. V. monitors and necessary cabling. Allows monitoring of the missile in the control room.

SHT 1 OF 1

| ENGINEERING DEPT. | BASE INSTALLATION DEPT. | MANUFACTURING DEPT. |
|---|---|---|
| | | |

2-6340-0-1
REV. 11-15-61
2-1-62

WS 133A

# ASSEMBLY & CHECKOUT EQUIPMENT REQUIREMENTS

ACO NUMBER 352
APPROVAL DATE 9-8-61
REVISION _____ DATE _____

EQUIPMENT TITLE: LEAD, ELECTRICAL (GROUNDING)

RESPONSIBLE DEPT. BID EQUIP. CLASSIFICATION SFC/OH
DESIGN RQMTS DOCUMENT None DWG NO. None
TO BE USED AT:

| BASE | MAFB | EAFB | VAFB | STP III | PLT 77 | | | |
|---|---|---|---|---|---|---|---|---|
| DOC | D2-7648 | D2-7648 | D2-7871 | D2-9942 | D2-11162 | | | |
| | | | | | X | | | |

PURPOSE:

To protect the engines and missiles against an inadvertent firing caused by static electricity during transfer of the missile and engines both to and from a vehicle and from one vehicle to the other and during transient storage.

DESCRIPTION:

A standard electrical ground cable approximately 8' long with a connector plug on one end to match the T. E., MCAT, and 1st, 2nd, and 3rd stage transporter grounding connectors; and a clamp on the other end for fastening to a fixed earth potential grounding device.

This item is identical to former Fig. A 4176 cancelled, operational items to be provided in ECL 258.

SHT 1 OF 1

| ENGINEERING DEPT. | BASE INSTALLATION DEPT. | MANUFACTURING DEPT. |
|---|---|---|
| H. N. Forster 9/8 | [illegible] 9/8/61 | [illegible] |

2-6340-0-1
REV. 11-15-61
2-1-62

E2/4

# WS 133A
# ASSEMBLY & CHECKOUT EQUIPMENT REQUIREMENTS

ACO NUMBER 362
APPROVAL DATE 9-12-61
REVISION A DATE 11-8-61

EQUIPMENT TITLE: MEG OHMMETER (Basic Noun First)

RESPONSIBLE DEPT. BID-MM EQUIP. CLASSIFICATION SFC/OH

DESIGN RQMTS DOCUMENT NONE DWG NO. N.A.

TO BE USED AT:

| BASE | MAFB | EAFB | VAFB | STP III | PLT 77 | | | |
|---|---|---|---|---|---|---|---|---|
| DOC | D2-7648 | D2-7648 | D2-7871 | D2-9942 | D2-11162 | | | |
| | X | X | X | | X | | | |

PURPOSE & JUSTIFICATION:

A requirement exists during the Assembly and Checkout for a general purpose high resistance insulation tester to check Electrical cables for insulation breakdown. Items such as the Electrical cables in the Maintenance Support Shop in the CPA and the RF Coaxial Cables used with HF/UHF Radio System require insulation tests.

DESCRIPTION, REQUIREMENTS & RECOMMENDATIONS:

It is recommended that a General Radio Model 1862-B Megohmmeter or equivalent be furnished.

Range 0.5 to 2,000,000 MEGO 500 VDC.

NOTE: Use form U3-4071-1000 if additional sheets are required.

ORIGINATING GROUP SUPERVISOR: _____
TELEPHONE: _____

SHT 1 OF 1

| ENGINEERING DEPT. | BASE INSTALLATION DEPT. | MANUFACTURING DEPT. |
|---|---|---|
| [illegible] | [illegible] | [illegible] |

2-6340-0-1
REV. 11-15-61
2-1-62

WS 133A

# ASSEMBLY & CHECKOUT EQUIPMENT REQUIREMENTS

ACO NUMBER 365
APPROVAL DATE 9-8-61
REVISION _____ DATE _____

EQUIPMENT TITLE: MEGGER, GROUND

RESPONSIBLE DEPT. BID EQUIP. CLASSIFICATION SCF/OH
DESIGN RQMTS DOCUMENT NONE DWG NO. NONE
TO BE USED AT:

| BASE | MAFB | EAFB | VAFB | STP III | PLT 77 | | | |
|---|---|---|---|---|---|---|---|---|
| DOC | D2-7648 | D2-7648 | D2-7871 | D2-9942 | D2-11162 | | | |
| | | | | | X | | | |

PURPOSE:

To check and verify the ground plane of the CPA, MAB and Support Building, meet resistance requirements. This Ground Megger measures very low resistance in contrast to the megger which measures very high electrical insulation resistance.

DESCRIPTION:

A Ground Megger which uses the 3-pole method of evaluating the earth ground resistance. A Biddle Model 600 Ground Megger or equivalent is recommended.

SHT 1 OF 1

| ENGINEERING DEPT. | BASE INSTALLATION DEPT. | MANUFACTURING DEPT. |
|---|---|---|
| N. N. Barton | [illegible] | [illegible] |

2-6310-0-1
REV. 11-15-61
2-1-62

425

# WS 133A
# ASSEMBLY & CHECKOUT EQUIPMENT REQUIREMENTS

ACO NUMBER 376
APPROVAL DATE 10-11-61
REVISION _____ DATE _____

EQUIPMENT TITLE: Power Supply

RESPONSIBLE DEPT. BI-MM EQUIP. CLASSIFICATION SFC/OH
DESIGN RQMTS DOCUMENT None DWG NO. None
TO BE USED AT:

| BASE | MAFB | EAFB | VAFB | STP III | PLT 77 | | | |
|---|---|---|---|---|---|---|---|---|
| DOC | D2-7648 | D2-7648 | D2-7871 | D2-9942 | D2-11162 | | | |
| | | | | | X | | | |

PURPOSE:
To provide D. C. power source for the Mobile Radio Equipment when it is being bench tested and/or aligned.

See D2-11162 Section C, Paragraph C6.1.

DESCRIPTION:

A filtered DC Power Supply, with two voltage output ranges, and two meters, (current and voltage).

DC Output 0-15 and 0-35 V DC
Ripple Content: 100 millivolts maximum at 5 amps
Metering Accuracy: ± 2% full scale
Current Capacity: 6-12V DC Operation
Continuous - 30 amps
Intermittent - 40 amps

24-35 V DC Operation
Continuous - 20 amps
Intermittent - 30 amps

Input Voltage: 110-120 Volts, 50-60 Cycles AC
Power Consumption: Approximately 700 Watts with 30 Amp, 12 VDC Load.
Regulation: Maximum 3 volt drop (Receiver standby to full load 12 VDC Operation)

Overall Dimensions: 13½ " high x 8" wide x 13" deep

Weight: 56 lbs.

It is recommended the D.C Motorola, Model T1012A, or equivalent, be provided.

This replaces ACO 0550, dated 8/1/1.

SHT 1 OF 1

| ENGINEERING DEPT. | BASE INSTALLATION DEPT. | MANUFACTURING DEPT. |
|---|---|---|
| [signature] | [signature] | A. E. Preiser |

JERRY ROQUET

2-6340-0-1
REV. 11-15-61 10/30/61
2-1-62

WS 133A

# ASSEMBLY & CHECKOUT EQUIPMENT REQUIREMENTS

ACO NUMBER 388
APPROVAL DATE 11-8-61
REVISION _____ DATE _____

EQUIPMENT TITLE: LOAD BANK

RESPONSIBLE DEPT. BID
EQUIP. CLASSIFICATION SFC/OH
DESIGN RQMTS DOCUMENT NONE
DWG NO. N.A.
TO BE USED AT:

| BASE | MAFB | EAFB | VAFB | STP III | PLT 77 | | | |
|---|---|---|---|---|---|---|---|---|
| DOC | D2-7648 | D2-7648 | D2-7871 | D2-9942 | D2-11162 | | | |
| | | | | | X | | | |

PURPOSE:

A requirement exists for a load bank to be used during test and adjusting the DC power supplies used in the CPA and MAB.

Used for Figure A 7728, 7729, and 7717, all DC loads.

| | | |
|---|---|---|
| 7728 | 28 V @ 50 A, 28 V @ 30 A | 1400 W, 840 W |
| 7729 | 28 V @ 350 A, 28 V @ 30 A | 9.8 KW, 840 W |
| 7717 | 28 V @ 350 A, 28 V @ 125 A, 28 V @ 30 A, 28 V @ 50 A | 9.8 KW, 3.5 KW, 1.4 KW |

DESCRIPTION:

A resistive load variable from no load to full load, 0 to 350 amps at 28± volts DC, (approximately 15,000 watts), with provisions for current and voltage measurements.

SHT 1 OF 11

| ENGINEERING DEPT. | BASE INSTALLATION DEPT. | MANUFACTURING DEPT. |
|---|---|---|
| | | |

2-6340-0-1
11-15-61
2-1-62

W. Fogg

# WS 133A
# ASSEMBLY & CHECKOUT EQUIPMENT REQUIREMENTS

ACO NUMBER 391
APPROVAL DATE 11-10-61
REVISION _____ DATE _____

EQUIPMENT TITLE: VOLT BOX, AC POWER SUPPLY
(Basic Noun First)

RESPONSIBLE DEPT. BID EQUIP. CLASSIFICATION SFC/OH

DESIGN RQMTS DOCUMENT None DWG NO. N. A.

TO BE USED AT:

| BASE | MAFB | EAFB | VAFB | STP III | PLT 77 | | | |
|---|---|---|---|---|---|---|---|---|
| DOC | D2-7648 | D2-7648 | D2-7871 | D2-9942 | D2-11162 | | | |
| | | | | | X | | | |

PURPOSE & JUSTIFICATION:

A requirement exists for varying the line voltage (115 VAC. 60 CPS, single phase) to the test set, missile checkout console, BGS-140, during post-installation testing. Variations of 90 to 130 VAC are required.

DESCRIPTION, REQUIREMENTS & RECOMMENDATIONS:

It is recommended that a volt box, AC power supply 0 to 140 VAC, 7.5 AMP capacity, 50/60 CPS, single phase, Superior Electric type UCIM be provided. This is a self contained instrument containing power stat, power cord, fused output recepticles and a line/load meter for rough indication.

NOTE: Use form U3-4271-1003 if additional sheets are required.

ORIGINATING GROUP SUPERVISOR: Paul Long
TELEPHONE: 5-3310

SHT 1 OF 1

| ENGINEERING DEPT. | BASE INSTALLATION DEPT. | MANUFACTURING DEPT. |
|---|---|---|
| [signature] | [signature] | [signature] |

2-6340-0-1

REV. 2-1-62

8th

# WS 133A
# ASSEMBLY & CHECKOUT EQUIPMENT REQUIREMENTS

ACO NUMBER 393
APPROVAL DATE 11-10-61
REVISION _____ DATE _____

EQUIPMENT TITLE: POWER SUPPLY
(Basic Noun First)

RESPONSIBLE DEPT. BID
EQUIP. CLASSIFICATION SFC/OH
DESIGN RQMTS DOCUMENT None
DWG NO. N. A.
TO BE USED AT:

| BASE | MAFB | EAFB | VAFB | STP III | PLT 77 | | | |
|---|---|---|---|---|---|---|---|---|
| DOC | D2-7648 | D2-7648 | D2-7871 | D2-9942 | D2-11162 | | | |
| | | | | | X | | | |

PURPOSE & JUSTIFICATION:

A requirement exists during post-installation testing of Fig. A -7723 (Console Missile Checkout BGS-77) for a power supply capable of 0 to 30 VDC, current limitation at (25) (100) and (250MA) isolated output, 0.3% regulation and 150 MV RMS or less ripple & Noise.

DESCRIPTION, REQUIREMENTS & RECOMMENDATIONS:

It is recommended that an HP 721A be provided.

NOTE: Use form LO-4071-1000 if additional sheets are required.

ORIGINATING GROUP SUPERVISOR: Paul Long
TELEPHONE: 5-3310

SHT 1 OF 1

| ENGINEERING DEPT. | BASE INSTALLATION DEPT. | MANUFACTURING DEPT. |
|---|---|---|
| [signature] | [signature] | [signature] |

2-6340-0-1

REV. 2-1-62

# WS 133A
# ASSEMBLY & CHECKOUT EQUIPMENT REQUIREMENTS

ACO NUMBER 402
APPROVAL DATE
REVISION DATE

EQUIPMENT TITLE: Cable Tester
(Basic Noun First)

RESPONSIBLE DEPT. Base Installations EQUIP. CLASSIFICATION SFC/OH

DESIGN RQMTS DOCUMENT DWG NO.
TO BE USED AT:

| BASE | MAFB | EAFB | VAFB | STP III | PLT 77 | | | |
|---|---|---|---|---|---|---|---|---|
| DOC | D2-7648 | D2-7648 | D2-7871 | D2-9942 | D2-11162 | | | |
| | | | | | 1 | | | |

PURPOSE & JUSTIFICATION: Adapter Cables

Used in conjunction with SFA 7715A "Test Set, Raceway Cables" for conducting continuity and leakage resistance tests prior to installation of the raceway.

NOTE: Use form LB-4071-1000 if additional sheets are required.

DESCRIPTION, REQUIREMENTS & RECOMMENDATIONS:

The adaptor cables provided in SFA 7715 are designed for usage with a specific cable tester.

It is recommended that a California Technical Industries 165A test set be used to fulfill the above requirements.

1 One unit procured by Manufacturing Engineering on EAMR MEFT/663-1 Revision "B"

ORIGINATING GROUP SUPERVISOR:
TELEPHONE:

SHT 1 OF 1

| ENGINEERING DEPT. | BASE INSTALLATION DEPT. | MANUFACTURING DEPT. |
|---|---|---|
| | | |

2-6340-0-1

REV. 11-15-61
2-1-62

# WS 133A

# ASSEMBLY & CHECKOUT EQUIPMENT REQUIREMENTS

ACO NUMBER 405

APPROVAL DATE 4/24/61

REVISION C DATE

EQUIPMENT TITLE Hoist, Portable
(Basic Noun First)

RESPONSIBLE DEPT. ~~BID~~ EQUIP. CLASSIFICATION SFC/OH

DESIGN REQMTS DOCUMENT None DWG NO. None

TO BE USED AT:

| BASE | MAFB | EAFB | VAFB | STP III | PLT 77 | | | |
|---|---|---|---|---|---|---|---|---|
| DOC | D2-7648 | D2-7648 | D2-7871 | D2-9942 | D2-11162 | | | |
| | X | X | X | X | X | | | |

NOTE: Use form U3-4071-1000 if additional sheets are required

PURPOSE & JUSTIFICATION

1. To lift and move the G&C section within the G&C section test area at the CSA.
2. To lift and move the G&C section from its container to the Autonavigator Hand Truck (ACO 0565) in the Component Processing Area, (Bldg. 1265) at AF Plant 77.

DESCRIPTION, REQUIREMENTS & RECOMMENDATIONS:

The G&C section weighs approximately 350 pounds, is approximately 31 inches high and 37½ inches in diameter.

The H7B transfer fixture in which the G&C section is positioned for test at the CSA is approximately 30 inches high. The autonavigator hand truck is approximately 36 inches high.

The portable hoist will be used in conjunction with the G&C assembly. Hoisting Adapter, Figure A 4028, to lift the G&C section from the shipping container, and position it on the transfer fixture in the CSA.

The portable hoist will be used in conjunction with the Hoisting Sling & Cover (H6A) (ACO 0608), to lift the G&C section from the shipping container and position it on the Autonavigator Hand Truck at AF Plant 77.

To be capable of performing the above tasks, the portable hoist must (1) not exceed in over all height of 8 feet 11 inches (2) be equipped with hard rubber castors which will prevent damage to the test area floor tile (3) be capable of being disassembled to enter the test area through the door provided.

ORIGINATING GROUP SUPERVISOR: O. A. Severide

TELEPHONE: 5-5022

SHT 1 OF 1

| ENGINEERING DEPT. | BASE INSTALLATION DEPT. | MANUFACTURING DEPT. | FACILITIES DEPT. |
|---|---|---|---|
| | | | |

2-6340-0-1 6-1-62
REV.

# WS 133A
# ASSEMBLY & CHECKOUT EQUIPMENT REQUIREMENTS

DOC NUMBER 415
APPROVAL DATE 12-12-61
REVISION _____ DATE _____

EQUIPMENT TITLE: Jack, Leveling Support
(Basic Item First)

RESPONSIBLE DEPT. BI-MM EQUIP. CLASSIFICATION SFC/OH

DESIGN RQMTS DOCUMENT None DWG NO. None

TO BE USED AT:

| BASE | MAFB | EAFB | VAFB | STP III | PLT 77 | | | |
|---|---|---|---|---|---|---|---|---|
| DOC | D2-764 | D2-7648 | D2-7871 | D2-9942 | D2-11162 | | | |
| | | | | | X | | | |

PURPOSE & JUSTIFICATION.

A requirement exists for a means of stabilizing a 2nd or 3rd stage engine transporter while on portable ramps 11½" high, by raising the aft end off of its suspension and supporting it rigidly in the proper position relative to the engine storage rails during engine transfer.

DESCRIPTION, REQUIREMENTS & RECOMMENDATIONS:

Leveling support jacks shall have approximately 12,000 pounds capacity and be [illegible] or hydraulically operated. The internal pressure shall not exceed 5,000 PSI. A minimum jacking stroke of 4 inches is required.

The operating range of jacks (X' for the 2nd or 3rd stage) shall be 43.50 to 51.50 or 41.50 to 49.50, respectively, if jacked from ground level while highway transporters are located on portable ramps.

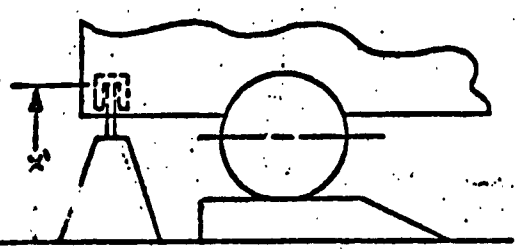


SHT 1 OF 1

| ENGINEERING DEPT. | BASE INSTALLATION DEPT. | MANUFACTURING DEPT. |
|---|---|---|
| A. H. Barton | [illegible] | A. E. Preiser |

ORIGINATING GROUP SUPERVISOR: J. ROQUET
TELEPHONE: 5-4797

2-6340-0-1

REV. 2-1-62

# WS 133A
# ASSEMBLY & CHECKOUT EQUIPMENT REQUIREMENTS

ACO NUMBER 422
APPROVAL DATE 6-23-61
REVISION B DATE 11-9-61

EQUIPMENT TITLE: VOLTMETER, DIFFERENTIAL AC-DC
(Basic Noun First)

RESPONSIBLE DEPT. BID EQUIP. CLASSIFICATION SFC/OH

DESIGN RQMTS DOCUMENT NONE DWG NO. N. A.

TO BE USED AT:

| BASE | MAFB | EAFB | VAFB | STP III | PLT 77 | | | |
|---|---|---|---|---|---|---|---|---|
| DOC | D2-7648 | D2-7648 | D2-7871 | D2-9942 | D2-11162 | | | |
| | X | X | X | X | X | | | |

PURPOSE & JUSTIFICATION:

A precision DC-AC Differential Voltmeter is required for shop and field use during assembly and checkout. This instrument is also required as a calibration standard for Plant 77. Among items which require precision voltage measurements are: Fig. A's 695, 4490, 1296, 3092, 4169, 1283, 1284, 1201, 1289, 1282, 3013, 1288, 599, 4018, 1379, ACO-101 & 129, and for Missile Targeting and in adjustment of the Security System.

DESCRIPTION, REQUIREMENTS & RECOMMENDATIONS:

It is recommended that a portable Voltmeter capable of measuring 0-500 Volts AC and DC, with an accuracy of .05% on DC ranges and .2% on AC ranges be provided.

The John Fluke Model 803 is recommended.

NOTE: Use form LG-4071-1000 if additional sheets are required.

ORIGINATING GROUP SUPERVISOR: Paul Long
TELEPHONE: 5-3310

SHT 1 OF 1

| ENGINEERING DEPT. | BASE INSTALLATION DEPT. | MANUFACTURING DEPT. |
|---|---|---|
| | | |

2-6340-0-1

REV. 11-15-61
2-62

433

# WS 133A
# ASSEMBLY & CHECKOUT EQUIPMENT REQUIREMENTS

ACO NUMBER 448
APPROVAL DATE
REVISION DATE

EQUIPMENT TITLE: Camera and Tripod, Still Picture
(Basic Noun First)

RESPONSIBLE DEPT. BI-MM
EQUIP. CLASSIFICATION SFC/OH
DESIGN RQMTS DOCUMENT
DWG NO.
TO BE USED AT:

| BASE | MAFB | EAFB | VAFB | STP III | PLT 77 | | | |
|---|---|---|---|---|---|---|---|---|
| DOC | D2-7648 | D2-7648 | D2-7071 | D2-9942 | D2-11162 | | | |
| | | | | | X | | | |

PURPOSE & JUSTIFICATION:
A requirement exists for a means of photographing damaged containers and/or airborne equipment in the receiving area. See D2-11162-, Section B, Function 1.1.1.

DESCRIPTION, REQUIREMENTS & RECOMMENDATIONS:
The Camera and Tripod shall be standard equipment. The Camera shall be of negative producing variety.

NOTE: Use form 103-4071-1000 if additional sheets are required.

ORIGINATING GROUP SUPERVISOR: C. A. Severide
TELEPHONE: 5-5022

SHT 1 OF 1

| ENGINEERING DEPT. | BASE INSTALLATION DEPT. | MANUFACTURING DEPT. |
|---|---|---|
| | | |

2-6340-0-1
REV. 6-1-62

WS 133A

# ASSEMBLY & CHECKOUT EQUIPMENT REQUIREMENTS

ACO NUMBER 449

APPROVAL DATE

REVISION DATE

EQUIPMENT TITLE: Electrical Cable Assy - Portable Flood Lamps
(Basic Noun First)

RESPONSIBLE DEPT. BI-MM

EQUIP. CLASSIFICATION SFC/OH

DESIGN RQMTS DOCUMENT

DWG NO.

TO BE USED AT:

| BASE | MAFB | EAFB | VAFB | STP III | PLT 77 | | | |
|---|---|---|---|---|---|---|---|---|
| DOC | D2-7648 | D2-7648 | D2-7071 | D2-9942 | D2-11162 | | | |
| | | | | | X | | | |

PURPOSE & JUSTIFICATION:

A requirement exists for a means to provide electrical power to the Portable Flood Lamps in the Igloo and the MAB Transfer Areas. See D2-11162 , Section B, Functions 2.2, 4.2, 13.1, 13.6, 13.7, 13.8, 13.9, and 13.10.

DESCRIPTION, REQUIREMENTS & RECOMMENDATIONS:

The Electrical Cable Assembly shall be of suitable length to provide adequate lighting for transfer functions at night and shall provide 110 volt, 60 cycle AC power to the Portable Flood Lamps (ACO 4425).

NOTE: Use form U3-4071-1020 if additional sheets are required.

ORIGINATING GROUP SUPERVISOR: O. A. Severide
TELEPHONE: 5-5022

SHT 1 OF 1

| ENGINEERING DEPT. | BASE INSTALLATION DEPT. | MANUFACTURING DEPT. |
|---|---|---|
| | | |

2-6340-0-1

REV. 6-1-62

WS 133A

# ASSEMBLY & CHECKOUT EQUIPMENT REQUIREMENTS

ACO NUMBER 450

APPROVAL DATE 3-9-62

REVISION _____ DATE _____

EQUIPMENT TITLE Hoist, Lever (Come-Along)
(Basic Noun First)

RESPONSIBLE DEPT. BI-MM

EQUIP. CLASSIFICATION SFC/OH

DESIGN REQMTS DOCUMENT _____

DWG NO. _____

TO BE USED AT:

| BASE | MAFB | EAFB | VAFB | STP III | PLT 77 | | | |
|---|---|---|---|---|---|---|---|---|
| DOC | D2-7648 | D2-7648 | D2-7871 | D2-9942 | D2-11162 | | | |
| | | | | | X | | | |

PURPOSE & JUSTIFICATION

A requirement exists for a means of repositioning the engines longitudinally along the Missile Joining Rails during missile assembly, see D2-11162-1, Section B, Function 7.4.1.

DESCRIPTION, REQUIREMENTS & RECOMMENDATIONS:

A standard lever hoist (come-along) shall be used, capable of providing a minimum of 1500 lbs. force.

NOTE: Use form U3-4071-1000 if additional sheets are required

ORIGINATING GROUP SUPERVISOR: O. A. Severide

TELEPHONE: 5-5022

SHT 1 OF 1

| ENGINEERING DEPT. | BASE INSTALLATION DEPT. | MANUFACTURING DEPT. | FACILITIES DEPT. |
|---|---|---|---|
| | | | |

2-6340-0-1

REV. 6-1-62

WS 133A

# ASSEMBLY & CHECKOUT EQUIPMENT REQUIREMENTS

ACO NUMBER 452
APPROVAL DATE
REVISION DATE

EQUIPMENT TITLE: Truck, Motor Misc. Delivery
(Basic Noun First)

RESPONSIBLE DEPT. BI-MM EQUIP. CLASSIFICATION SFC/OH

DESIGN RQMTS DOCUMENT DWG NO.

TO BE USED AT:

| BASE | MAFB | EAFB | VAFB | STP III | [illegible] 77 | | | |
|---|---|---|---|---|---|---|---|---|
| DOC | D2-7648 | D2-7649 | D2-7971 | D2-9942 | D2-11162 | | | |
| | | | | | X | | | |

PURPOSE & JUSTIFICATION:

A requirement exists for a means to transport Airborne and Handling Equipment from R&I to CPA and MAB, and from CPA to storage. See D2-11162 , Section B, Functions 1.1.1, 2.1.1, 2.3.1, 3.1.1, 4.1.2 and 4.3.1.

DESCRIPTION, REQUIREMENTS & RECOMMENDATIONS:

The truck will be standard equipment, approximately 1 ton, flat bed.

ORIGINATING GROUP SUPERVISOR: O. A. Severide
TELEPHONE: 5-5022

SHT. 1 OF 1

| ENGINEERING DEPT. | BASE INSTALLATION DEPT. | MANUFACTURING DEPT. |
|---|---|---|
| | | |

2-6340-0-1
REV. 6-1-62

1Eh

# WS 133A
# ASSEMBLY & CHECKOUT EQUIPMENT REQUIREMENTS

ACO NUMBER 453
APPROVAL DATE
REVISION DATE

EQUIPMENT TITLE: Truck, Lift - Fork
(Basic Noun First)

RESPONSIBLE DEPT. BI-MM
EQUIP. CLASSIFICATION SFC/OH
DESIGN RQMTS DOCUMENT
DWG NO.
TO BE USED AT:

| BASE | MAFB | EAFB | VAFB | STP III | PLT 77 | | | |
|---|---|---|---|---|---|---|---|---|
| DOC | D2-7648 | D2-7640 | D2-7371 | D2-9942 | D2-11162 | | | |
| | | | | | X | | | |

PURPOSE & JUSTIFICATION:

A requirement exists for a means of moving Airborne & Handling Equipment, in the Receiving, CPA, MAB and Storage Areas. See D2-11162 , Section B, Functions 1.1.1, 2.1.1, 2.2.1, 3.1.1 and 4.1.2.

DESCRIPTION, REQUIREMENTS & RECOMMENDATIONS:

The Fork Lift will be standard equipment capable of lifting 2000 lbs.

NOTE: Use form U3-4071-1000 if additional sheets are required.

ORIGINATING GROUP SUPERVISOR: O. A. Severide
TELEPHONE: 5-5022

SHT 1 OF 1

| ENGINEERING DEPT. | BASE INSTALLATION DEPT. | MANUFACTURING DEPT. |
|---|---|---|
| | | |

2-6340-0-1
REV. 6-1-62

BOEING NO. D2-11162
APP. II PAGE 326

# WS 133A

## ASSEMBLY & CHECKOUT EQUIPMENT REQUIREMENTS

ACO NUMBER 454

APPROVAL DATE 2-20-62

REVISION A DATE

EQUIPMENT TITLE Sling - Standard, Factory (4 drop)
(Basic Noun First)

RESPONSIBLE DEPT. BI-MM EQUIP. CLASSIFICATION SFC/OH

DESIGN REQMTS DOCUMENT DWG NO.

TO BE USED AT:

| BASE | MAFB | EAFB | VAFB | STP III | PLT 77 | | | |
|---|---|---|---|---|---|---|---|---|
| DOC | D2-7648 | D2-7648 | D2-7871 | D2-9942 | D2-11162 | | | |
| | | | | | X | | | |

PURPOSE & JUSTIFICATION

A requirement exists for a means to secure miscellaneous equipment to hoists for lifting and moving to and from inspection (R&I Area), and for lifting and moving equipment in the high bay area of the Missile Assembly Building (MAB). See D2-11162 Section B, Functions 1.1, 5.1, 7.4, and 9.1.

DESCRIPTION, REQUIREMENTS & RECOMMENDATIONS:

A sling of standard cable construction with appropriate attach points for fastening to the hoist (ring) and various equipments (snaps or hooks) is recommended. See page 2 for description.

SHT 1 OF 2

| ENGINEERING DEPT. | BASE INSTALLATION DEPT. | MANUFACTURING DEPT. | FACILITIES DEPT. |
|---|---|---|---|
| | | | |

NOTE: Use form U3-4071-1000 if additional sheets are required

ORIGINATING GROUP SUPERVISOR: O. A. Severide

TELEPHONE: 5-5022

2-6340-0-1 6-1-62
REV.

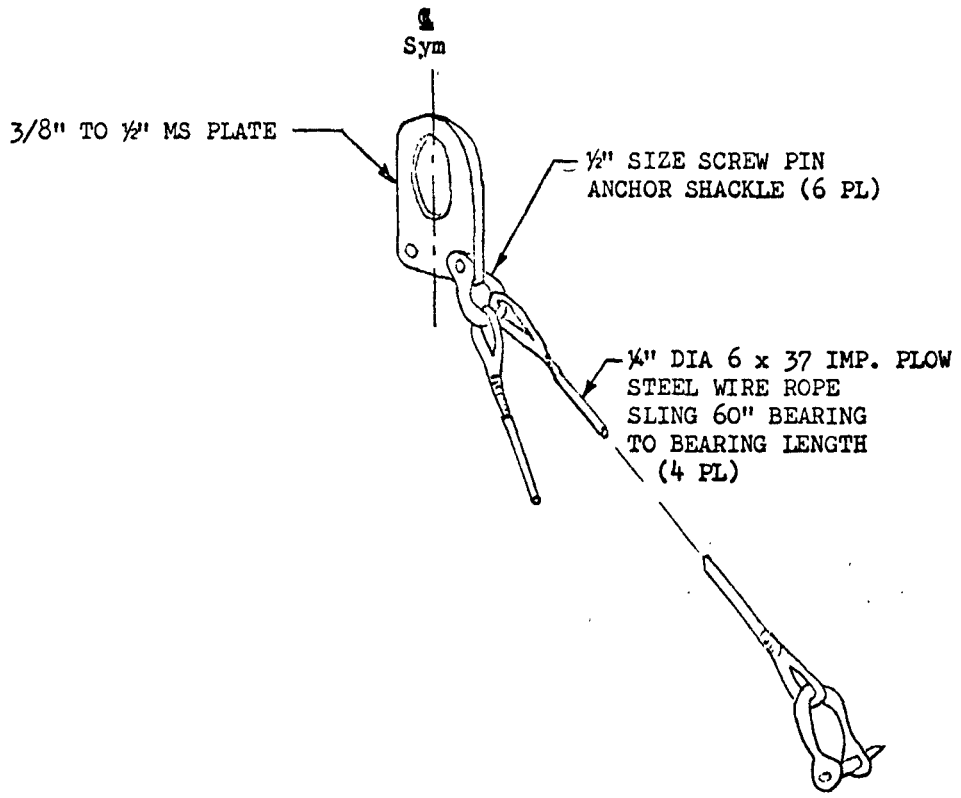


NOTE: MAKE THIMBLE SPLICE WITH SHACKLE IN PLACE SINCE ¼" THIMBLE WILL NOT PASS A ½" SHACKLE.

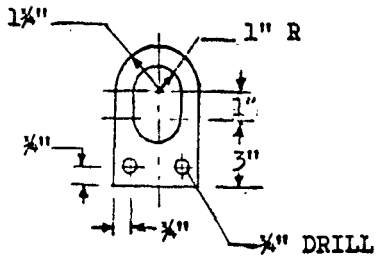


PROOF LOAD TO 1000 LB.

USE IN MAB ONLY

| | | | | | | |
|---|---|---|---|---|---|---|
| CALC | | 6-1-62 | REVISED | DATE | SLING, FOUR DROP | ACO 454 |
| CHECK | | | | | | D2-11162 |
| APPD | | | | | | |
| APPD | | | | | THE BOEING COMPANY | PAGE 34 |

U3 4036 3000 REQ 10388

WS 133A

# ASSEMBLY & CHECKOUT EQUIPMENT REQUIREMENTS

ACO NUMBER 456

APPROVAL DATE

REVISION DATE

EQUIPMENT TITLE: Table, Work - Electronic Test
(Basic Noun First)

RESPONSIBLE DEPT. BI-MM

EQUIP. CLASSIFICATION SFC/OH

DESIGN RQMTS DOCUMENT

DWG NO.

TO BE USED AT:

| BASE | MAFB | EAFB | VAFB | STP III | PLT 77 | | | |
|---|---|---|---|---|---|---|---|---|
| DOC | D2-7648 | D2-7648 | D2-7071 | D2-9942 | D2-11162 | | | |
| | | | | | X | | | |

PURPOSE & JUSTIFICATION:

A requirement exists for a work table for electronic testing of NCU's in the Component Processing Area. See D2-11162 , Section B, Functions 3.1.1.

DESCRIPTION, REQUIREMENTS & RECOMMENDATIONS:

The work table, electronic test, shall be standard level wooden table or equivalent.

SHT 1 OF 1

| ENGINEERING DEPT. | BASE INSTALLATION DEPT. | MANUFACTURING DEPT. |
|---|---|---|
| | | |

NOTE: Use form U3-4271-1020 if additional sheets are required.

ORIGINATING GROUP SUPERVISOR: C. A. Severide
TELEPHONE: [illegible]022

2-6340-0-1
REV. 6-1-62

# WS 133A

# ASSEMBLY & CHECKOUT EQUIPMENT REQUIREMENTS

ACO NUMBER 457

APPROVAL DATE 2-2-62

REVISION _____ DATE _____

EQUIPMENT TITLE Container, Raceway Cables, Stage III
(Basic Noun First)

RESPONSIBLE DEPT. Manufacturing EQUIP. CLASSIFICATION BATE

DESIGN REQMTS DOCUMENT _____ DWG NO. NX 13186

TO BE USED AT:

| BASE | MAFB | EAFB | VAFB | STP III | PLT 77 | | | |
|---|---|---|---|---|---|---|---|---|
| DOC | D2-7648 | D2-7648 | D2-7871 | D2-9942 | D2-11162 | | | |
| | | | | | X | | | |

PURPOSE & JUSTIFICATION

During the missile repair and rework phase at Plant 77, a requirement exists for a container which can be used to transport the Stage III raceway cable from the missile assembly building to the component processing area for fault isolation testing. It is also required that this container be provided with adapter cutouts to allow connecting the SFA 7715 cable adapters to the cable connectors for testing without removing the raceway cable from the container.

DESCRIPTION, REQUIREMENTS & RECOMMENDATIONS:

It is recommended that the container be built from the Autonetics Drawings NX 13186 and sketches.

1. Container will have a mounting bulkhead for attachment of breakaway receptacles, umbilical receptacle and special G&C connector. The bulkhead shall be open to the exterior of the container when the container cover is removed, so that connectors other than those listed in item 1 above will be exposed for connection of test equipment.

2. Space will be provided for connecting test cable adapters to the raceway cable connectors other than those listed in item 1 above.

3. Raceway cables will be free of any obstructions above the level of the cable after the cover is removed.

4. Container will have fork lift brackets for transporting.

5. Container will have four (4) list handles and hoist hooks.

SHT 1 OF 1

| ENGINEERING DEPT. | BASE INSTALLATION DEPT. | MANUFACTURING DEPT. | FACILITIES DEPT. |
|---|---|---|---|
| | | | |

ORIGINATING GROUP SUPERVISOR: O. A. Severide

TELEPHONE: 5-5022

2-6340-0-1 6-1-62
REV.

ehh

# WS 133A

## ASSEMBLY & CHECKOUT EQUIPMENT REQUIREMENTS

ACO NUMBER 458

APPROVAL DATE 2-2-62

REVISION _____ DATE _____

EQUIPMENT TITLE Container, Raceway Cable, Stage II
(Basic Noun First)

RESPONSIBLE DEPT. Manufacturing EQUIP. CLASSIFICATION BATE

DESIGN REQMTS DOCUMENT None DWG NO. _____

TO BE USED AT:

| BASE | MAFB | EAFB | VAFB | STP III | PLT 77 | | | |
|---|---|---|---|---|---|---|---|---|
| DOC | D2-7648 | D2-7648 | D2-7871 | D2-9942 | D2-11162 | | | |
| | | | | | X | | | |

NOTE: Use form U3-4271-100 if additional sheets are required

PURPOSE & JUSTIFICATION

During the missile repair and rework phase at Plant 77, a requirement exists for a container which can be used to transport the Stage II raceway cable from the missile assembly building to the component processing area for fault isolation testing. It is also required that this container be provided with adapter cutouts to allow connecting the SFA 7715 cable adapters to the cable connectors for testing without removing the raceway cable from the container.

DESCRIPTION, REQUIREMENTS & RECOMMENDATIONS:

It is recommended that the container be built from the Autonetics Drawings NX-13185 and sketches.

1. Container will have a mounting bulkhead for attachment of breakaway receptacles, umbilical receptacle and special G&C connector. Bulkhead will open to exterior of container when container cover is removed, so that connectors can be directly attached.

2. Space will be provided for connecting test cable adapters to the raceway cable connectors other than those listed in item 1 above.

3. Raceway cables will be free of any obstructions above the level of the cable after the cover is removed.

4. Container will have fork lift brackets for transporting.

5. Container will have four (4) lift handles and hoist hooks.

ORIGINATING GROUP SUPERVISOR: O. A. Severide

TELEPHONE: 5-5022

SHT 1 OF 1

| ENGINEERING DEPT. | BASE INSTALLATION DEPT. | MANUFACTURING DEPT. | FACILITIES DEPT. |
|---|---|---|---|
| | | | |

2-6340-0-1 REV. 6-1-62

# WS 133A

## ASSEMBLY & CHECKOUT EQUIPMENT REQUIREMENTS

ACO NUMBER 459

APPROVAL DATE 2-2-62

REVISION _____ DATE _____

EQUIPMENT TITLE Container, Raceway Cable, Stage I
(Basic Noun First)

RESPONSIBLE DEPT. Manufacturing EQUIP. CLASSIFICATION BATE

DESIGN REQMTS DOCUMENT None DWG NO. _____

TO BE USED AT:

| BASE | MAFB | EAFB | VAFB | STP III | PLT 77 | | | |
|---|---|---|---|---|---|---|---|---|
| DOC | D2-7648 | D2-7648 | D2-7871 | D2-9942 | D2-11162 | | | |
| | | | | | X | | | |

NOTE: Use form 03-4071-1023 if additional sheets are required

PURPOSE & JUSTIFICATION

During the missile repair and rework phase at Plant 77, a requirement exists for a container which can be used to transport the Stage I raceway cable from the missile assembly building to the component processing area for fault isolation testing. It is also required that this container be provided with adapter cutouts to allow connecting the SFA 7715 cable adaptors to the cable connectors for testing without removing the raceway cable from the container.

DESCRIPTION, REQUIREMENTS & RECOMMENDATIONS:

It is recommended that the container be built from the Autonetics Drawings 19289-204, NX-10014, and NX-13184.

1. Container will have a mounting bulkhead for attachment of breakaway receptacles, umbilical receptacle and special G&C connector. Bulkhead will open to exterior of container when container cover is removed, so that connectors can be directly attached.

2. Space will be provided for connecting test cable adapters to the raceway cable connectors other than those listed in item 1 above.

3. Raceway cables will be free of any obstructions above the level of the cable after the cover is removed.

4. Container will have fork lift brackets for transporting.

5. Container will have four (4) lift handles and hoist hooks.

ORIGINATING GROUP SUPERVISOR: O. A. Severide

TELEPHONE: 5-5022

SHT 1 OF 1

| ENGINEERING DEPT. | BASE INSTALLATION DEPT. | MANUFACTURING DEPT. | FACILITIES DEPT. |
|---|---|---|---|
| | | | |

2-6340-0-1 6-1-62
REV.

# WS 133A
# ASSEMBLY & CHECKOUT EQUIPMENT REQUIREMENTS

ACO NUMBER 461
APPROVAL DATE
REVISION DATE

EQUIPMENT TITLE: Truck, Lift - Jack
(Basic Noun First)

RESPONSIBLE DEPT. BI-MM EQUIP. CLASSIFICATION SFC/CH

DESIGN RQMTS DOCUMENT DWG NO.

TO BE USED AT:

| BASE | MAFB | EAFB | VAFB | STP III | PLT 77 | | | |
|---|---|---|---|---|---|---|---|---|
| DOC | D2-7648 | D2-7648 | D2-7071 | D2-9942 | D2-11162 | | | |
| | | | | | X | | | |

PURPOSE & JUSTIFICATION:

A requirement exists for a Truck Lift - Jack for transporting tub skids within the area. See D2-11162 , Section B, Function 1.1.1.

DESCRIPTION, REQUIREMENTS & RECOMMENDATIONS:

The Truck Lift - Jac is to be standard equipment.

NOTE: Use form U3-4071-1000 if additional sheets are required.

ORIGINATING GROUP SUPERVISOR: C. A. Severide
TELEPHONE: 5-5022

SHT 1 OF 1

| ENGINEERING DEPT. | BASE INSTALLATION DEPT. | MANUFACTURING DEPT. |
|---|---|---|
| | | |

2-6340-0-1
REV. 6-1-62

Sht

WS 133A

# ASSEMBLY & CHECKOUT EQUIPMENT REQUIREMENTS

ACO NUMBER 462

APPROVAL DATE

REVISION DATE

EQUIPMENT TITLE: Shelving, Storage (Basic Noun First)

RESPONSIBLE DEPT. BI-MM

EQUIP. CLASSIFICATION SFC/OH

DESIGN RQMTS DOCUMENT

DWG NO.

TO BE USED AT:

| BASE | MAFB | EAFB | VAFB | STP III | PLT 77 | | | |
|---|---|---|---|---|---|---|---|---|
| DOC | D2-7648 | D2-7648 | D2-7071 | D2-9242 | D2-11162 | | | |
| | | | | | X | | | |

PURPOSE & JUSTIFICATION:

A requirement exists for a means to store delivered OGE/MGE and special Facilities items. See D2-11162 , Section B, Paragraphs 2.3.1, 4.1.3, and 4.3.

DESCRIPTION, REQUIREMENTS & RECOMMENDATIONS:

Standard metal shelving shall be used.

NOTE: Use form U3-4071-1000 if additional sheets are required.

ORIGINATING GROUP SUPERVISOR: O. A. Severide

TELEPHONE: 5-5022

SHT 1 OF 1

| ENGINEERING DEPT. | BASE INSTALLATION DEPT. | MANUFACTURING DEPT. |
|---|---|---|
| | | |

2-6340-0-1

REV. 6-1-62

438

9th

# WS 133A
# ASSEMBLY & CHECKOUT EQUIPMENT REQUIREMENTS

ACO NUMBER 463
APPROVAL DATE
REVISION DATE

EQUIPMENT TITLE: Power Supply, DC
(Basic Noun First)

RESPONSIBLE DEPT. BI-MM EQUIP. CLASSIFICATION SFC/OH

DESIGN RQMTS DOCUMENT DWG NO.

TO BE USED AT:

| BASE | MAFB | EAFB | VAFB | STP III | PLT 77 | | | |
|---|---|---|---|---|---|---|---|---|
| DOC | D2-7648 | D2-7648 | D2-7871 | D2-9942 | D2-11162 | | | |
| | | | | | X | | | |

PURPOSE & JUSTIFICATION:

A requirement exists for providing 40 volts of DC power to BGS 140 (FSE 7675) during its functional test.

DESCRIPTION, REQUIREMENTS & RECOMMENDATIONS:

It is recommended that a Sorenson Model QR-40 DC power supply or equivalent be provided.

NOTE: Use form U3-4071-1500 if additional sheets are required.

ORIGINATING GROUP SUPERVISOR: O. A. Severide
TELEPHONE: 5-5022

SHT 1 OF 1

| ENGINEERING DEPT. | BASE INSTALLATION DEPT. | MANUFACTURING DEPT. |
|---|---|---|
| | | |

2-6340-0-1
REV. 6-1-62

WS 133A

# ASSEMBLY & CHECKOUT EQUIPMENT REQUIREMENTS

ACO NUMBER 466
APPROVAL DATE
REVISION B DATE

EQUIPMENT TITLE: Kit, Purging and Drying, G&C Section
(Basic Item Title)

RESPONSIBLE DEPT. BI-M1 EQUIP. CLASSIFICATION SFC/OM

DESIGN RQMTS DOCUMENT DWG NO.

TO BE USED AT:

| BASE | MAFB | EAFB | VAFB | STP III | PLT 77 | | | |
|---|---|---|---|---|---|---|---|---|
| DOC | D2-7648 | D2-7648 | D2-7871 | D2-9942 | D2-11162 | | | |
| | | | | | X | | | |

PURPOSE & JUSTIFICATION:

To provide a means of purging the liquid coolant from the Guidance and Control Section after the section has been turned off, and provide a means of drying the cooling compartment after being purged. (Wing I only)

DESCRIPTION, REQUIREMENTS & RECOMMENDATIONS:

It is recommended that the following equipment be utilized with the installed 90 psi facilities air supplies in the MAB's and the CPA to provide air for purging and drying: (Note, no equivalents due to on-dock requirements., see BOD TMX BSQAP 2-3-7, dated 3-2-62)

a. Wilkerson Model 1300-4 Line Filter with an automatic piston drain and filtering capacity to 5 microns.
b. Wilkerson Model 5706-4 Line Filter.
c. Wilkerson Model 2001-4 Tamper proof air pressure regulator (to be set at 20 psi maximum). (contains Wilkerson Model 6001 Tamper Proof Kit)
d. Wilkerson Model 2001-4 Adjustable air pressure regulator with gage.
e. Wilkerson Model 4001-2 Line Filter
f. Wilkerson Model 4001-2X Line Filter.
g. Hansen Model 3300 Quick disconnect air hose coupling.
h. Snap-Type Model AVEN-8-56 Quick disconnect hose coupling (hose end to mate with standard air hose used).
i. Snap-Type Model AVEC-8-56 Quick disconnect air hose coupling (hose end to mate with standard air hose from air supply).
j. Bucket - 1 gallon capacity.
k. Air hose - Standard ½" hi-pressure; length to be determined by facilities using interface requirements in MAB.

SHT. 1 OF 2

| ENGINEERING DEPT. | BASE INSTALLATION DEPT. | MANUFACTURING DEPT. |
|---|---|---|
| | | |

2-63-10-0-1

REV.

8-17-62

ACO 466 (Continued)

The filters which are capable of being changed shall be changed every six (6) months and the system certified to indicate the change of filters.

MAB

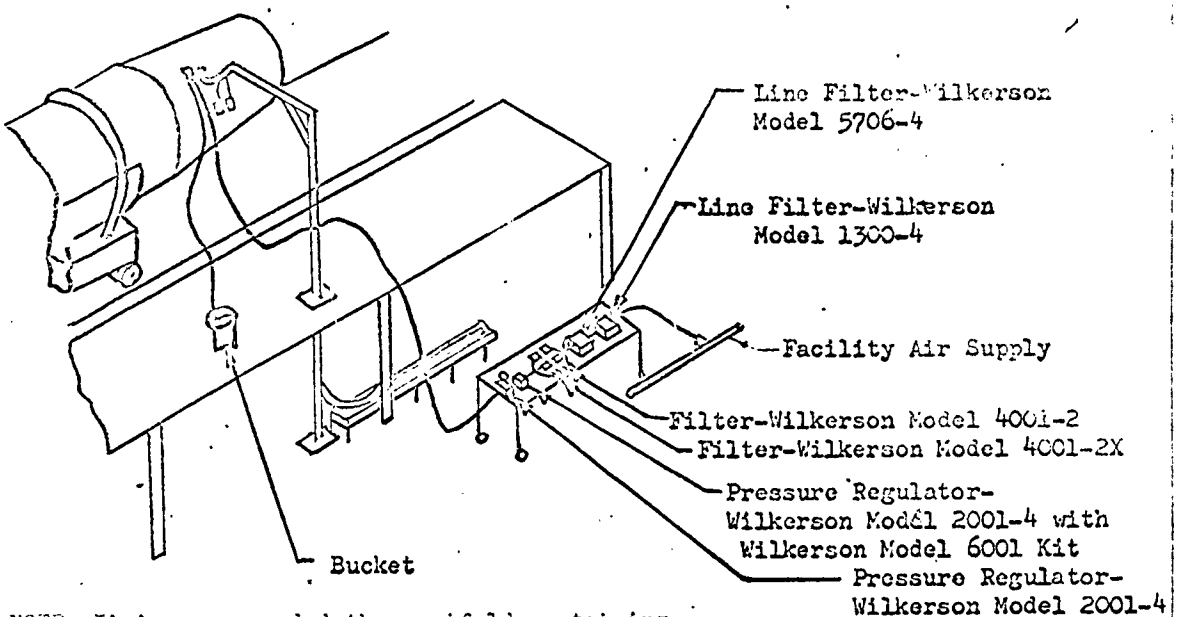


NOTE: It is recommended the manifold containing the three 4001-2 and three 4001-2X filters with ¼" lines be procured as a unit from Wilkerson.

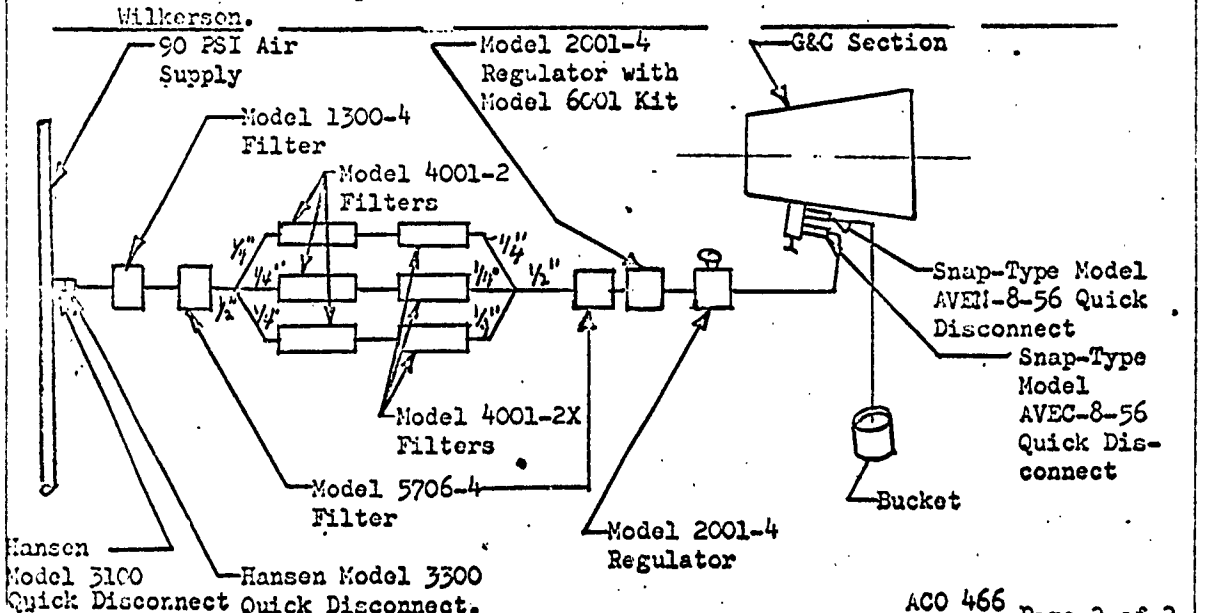






8-17-62

WS 133A

# ASSEMBLY & CHECKOUT EQUIPMENT REQUIREMENTS

ACO NUMBER 468

APPROVAL DATE

REVISION DATE

EQUIPMENT TITLE Sling, G&C Section Shipping Container Cover
(Basic Noun First)

RESPONSIBLE DEPT. BI-MM EQUIP. CLASSIFICATION SFC/OH

DESIGN REQMTS DOCUMENT DWG NO.

TO BE USED AT:

| BASE | MAFB | EAFB | VAFB | STP III | PLT 77 | | | |
|---|---|---|---|---|---|---|---|---|
| DOC | D2-7648 | D2-7648 | D2-7871 | D2-9942 | D2-11162 | | | |
| | | | | | X | | | |

NOTE: Use form U3-4271-1000 if additional sheets are required

PURPOSE & JUSTIFICATION

A requirement exists to remove the G&C Section Shipping Container Cover in the Component Processing Area (CPA) at AF Plant 77 in order that the G&C Section may be removed for visual inspection and battery installation.

DESCRIPTION, REQUIREMENTS & RECOMMENDATIONS:

A sling of steel pipe construction approximately 50" long, having a hook at each end to mate with the container cover handles and a center lift ring attached, which will mate with the portable hydraulic hoist, is recommended.

ORIGINATING GROUP SUPERVISOR: O. A. Severide

TELEPHONE: 5-5022

SHT 1 OF 2

| ENGINEERING DEPT. | BASE INSTALLATION DEPT. | MANUFACTURING DEPT. | FACILITIES DEPT. |
|---|---|---|---|
| | | | |

2-6340-0-1 6-1-62
REV.

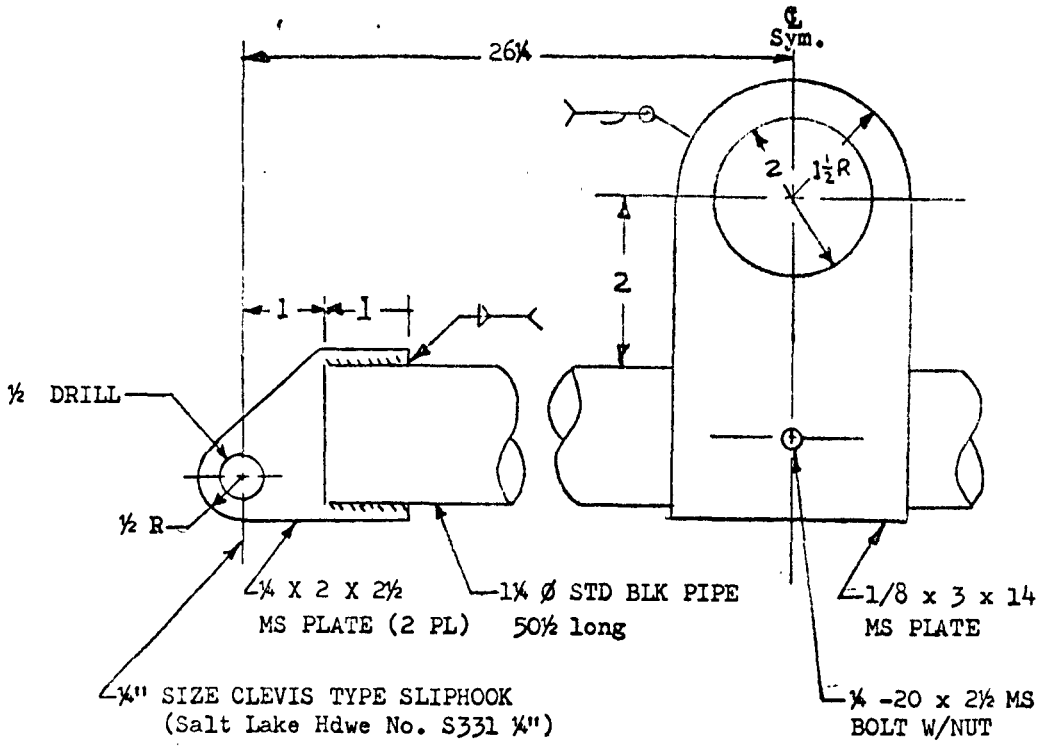


NOTE: STENCIL ON TOOL "LIFT G&C COVER ONLY"
TEST LOAD 200 LB TOTAL

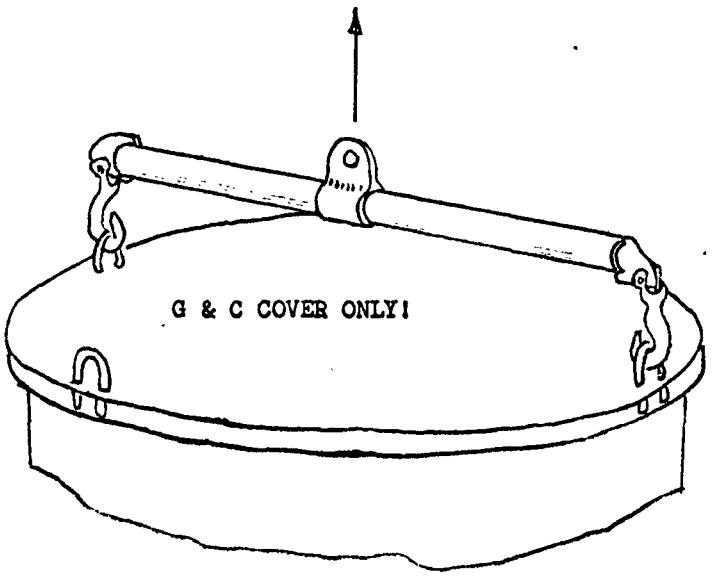


USAGE SKETCH

| | | | | | | |
|---|---|---|---|---|---|---|
| CALC | 6-1-62 | REVISED | DATE | SLING,, G&C CONTAINER COVER (CPA AREA ONLY) | | ACO NO. 468 |
| CHECK | | | | | | D2-11162 |
| APPD | | | | | | |
| APPD | | | | THE BOEING COMPANY | | PAGE 35 F |

U3 4036 3000 REQ 10388

15th

# WS 133A

# ASSEMBLY & CHECKOUT EQUIPMENT REQUIREMENTS

ACO NUMBER 532

APPROVAL DATE 12-11-62

REVISION _____ DATE _____

EQUIPMENT TITLE RECORDER, TEMPERATURE, PORTABLE
(Basic Noun First)

RESPONSIBLE DEPT. EI-MM EQUIP. CLASSIFICATION SFC/OR

DESIGN REQMTS DOCUMENT None DWG NO. None

TO BE USED AT:

| BASE | MAFB | EAFB | VAFB | STP III | PLT 77 | | | |
|---|---|---|---|---|---|---|---|---|
| DOC | D2-7648 | D2-7648 | D2-7871 | D2-9942 | D2-11162 | | | |
| | | | | | X | | | |

PURPOSE & JUSTIFICATION

A requirement exists to record the ambient temperature within the transporting vehicle during transportation of missiles and motors at A.F. Plant 77, when the Alarm Set (MGE 4187, FSE 7787 or FSE 7788) is not used.

DESCRIPTION, REQUIREMENTS & RECOMMENDATIONS:

It is recommended that a commercial recorder be supplied.

The following equipment is acceptable to satisfy this requirements:

BRISTOL Model 4069TH, Thermo-Humid Graph

(These units are available at Plant 77 stores)

This unit is required to record temperature in a permanent form for future reference. Range required is 30°F to 130°F ± °F. It must be self-powered for a period up to 24 hours.

NOTE: Use form U3-4071-1000 if additional sheets are required.

ORIGINATING GROUP SUPERVISOR: _____

TELEPHONE: _____

SHT 1 OF 1

| ENGINEERING DEPT. | BASE INSTALLATION DEPT. | MANUFACTURING DEPT. | FACILITIES DEPT. |
|---|---|---|---|
| | | | |

2-6340-0-1

REV. 1-11-63

WS 133A

# ASSEMBLY & CHECKOUT EQUIPMENT REQUIREMENTS

ACO NUMBER 719

APPROVAL DATE 2-20-62

REVISION _____ DATE _____

EQUIPMENT TITLE: [illegible] (Basic Noun First)

RESPONSIBLE DEPT. BI-[illegible] EQUIP. CLASSIFICATION [illegible]

DESIGN RQMTS DOCUMENT _____ EWS NO. _____

TO BE USED AT:

| BASE | MAFB | EAFB | VAFB | STP III | PLT 77 | | | |
|---|---|---|---|---|---|---|---|---|
| DOC | D2-7648 | D2-7648 | D2-7871 | D2-9942 | D2-11162 | | | |
| | ▷ | | ▷ | | X | | | |

PURPOSE & JUSTIFICATION:

To permit flow regulation in the simulated G&C Cooler circuit used for pre-assembly testing on the G&C Liquid Cooler (Figure A 1214) at the CSA.

Ref: D2-10735, "FTP - Cooler, Liquid, Guidance Section"

DESCRIPTION, REQUIREMENTS & RECOMMENDATIONS:

Nominal 1-inch, stainless steel, throttling valve.

Recommend Marsh type 1936 FTG Globe Pattern.

▷ This is interim equipment which may be substituted in conjunction with ACO's 752, 754, 719, 769, 4461, 0593, 731, 753, 749, 732, until ACO 4150, G&C Cooling Test Bench is available.

NOTE: Prior to use, this item shall be flushed with deionized water until the effluent contains less than 5 ppm of dissolved solids.

This item results from OSD-3.

ORIGINATING GROUP SUPERVISOR: [illegible] TELEPHONE: [illegible]

SHT 1 OF 1

| ENGINEERING DEPT. | BASE INSTALLATION DEPT. | MANUFACTURING DEPT. |
|---|---|---|
| H. H. Baxter | [illegible] | A. E. [illegible] |

2-6340-0-1 6-1-62

REV.

BOEING NO. D2-11162

APP. "I" PAGE 359

453

# WS 133A

## ASSEMBLY & CHECKOUT EQUIPMENT REQUIREMENTS

ACO NUMBER 731

APPROVAL DATE 3-23-62

REVISION _____ DATE _____

EQUIPMENT TITLE Cable Adaptor, Error Indication Test
(Basic Noun First)
G&C Ground Cooling Equipment

RESPONSIBLE DEPT. Manufacturing EQUIP. CLASSIFICATION LATE

DESIGN REQMTS DOCUMENT _____ DWG NO. _____

TO BE USED AT:

| BASE | MAFB | EAFB | VAFB | STP III | PLT 77 | | | |
|---|---|---|---|---|---|---|---|---|
| DOC | D2-7648 | D2-7648 | D2-7871 | D2-9942 | D2-11162 | | | |
| | 1 | | 1 | | X | | | |

NOTE: Use form U3-4271-1000 if additional sheets are required

PURPOSE & JUSTIFICATION

To provide work around means to test for bridge balance, error indicated and valve movement when conducting acceptance tests on the Guidance Control Cooling Equipment, Fig. A 9278 at Plant 77 and VAFB (CTLI) as requested by Action Assignment No. OSB-3. Ref. D2-10752, FTP Fig. A 9278.

DESCRIPTION, REQUIREMENTS & RECOMMENDATIONS:

Cable Assembly as shown on Sheet 2. To be inserted between "P3" of 25-23793-1, (Fig. A 9278) and "J3" of 10-20677-2 to allow connection of voltmeter and neon lamp as shown on Sheet 2.

1 This is interim equipment which may be substituted in conjunction with ACO's 749, 337 and 3023 until ACO 3035 or ACO 4150 is available.

ORIGINATING GROUP SUPERVISOR: G. R. Swanson
TELEPHONE: 2-6678

SHT 1 OF 2

| ENGINEERING DEPT. | BASE INSTALLATION DEPT. | MANUFACTURING DEPT. | FACILITIES DEPT. |
|---|---|---|---|
| | | | |

2-6340-0-1 6-1-62
REV.

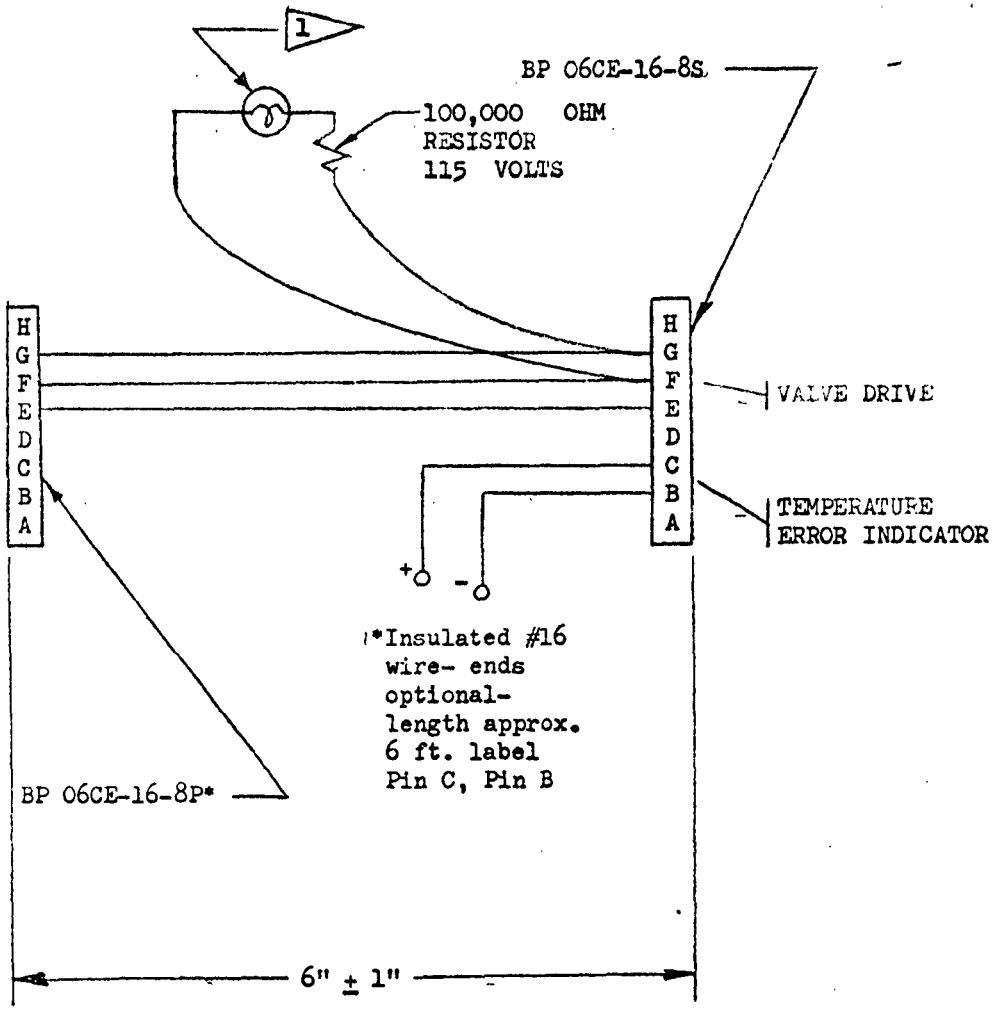


1 NEON INDICATOR LAMP - 115 VOLTS

* BMS 13-5C Type I, Class C, #16 (or Equiv.)

ACO 731
Page 2

# WS 133A

## ASSEMBLY & CHECKOUT EQUIPMENT REQUIREMENTS

ACO NUMBER 732

APPROVAL DATE 3-23-62

REVISION _____ DATE _____

EQUIPMENT TITLE Cable Adaptor, No-Go and Gross Temp. Test, G&C Ground Cooling Equipment
(Basic Noun First)

RESPONSIBLE DEPT. Manufacturing

EQUIP. CLASSIFICATION BATF

DESIGN REQMTS DOCUMENT _____

DWG NO. _____

TO BE USED AT:

| BASE | MAFB | EAFB | VAFB | STP III | PLT 77 | | | |
|---|---|---|---|---|---|---|---|---|
| DOC | D2-7648 | D2-7648 | D2-7871 | D2-9942 | D2-11162 | | | |
| | | | 1 | | X | | | |

PURPOSE & JUSTIFICATION

To provide work around means to monitor No-Go and Gross Temperature alarm signals when conducting acceptance tests on the G&C Cooling Equipment, Fig. A 9278, at Plant 77 and VAFB (CTLI) as requested by Action Assignment No. OSB-3. Reference D2-10752, FTP Fig. A 9278.

DESCRIPTION, REQUIREMENTS & RECOMMENDATIONS:

Cable Assembly is as shown on Sheet 2.

1 This is interim equipment which may be substituted in conjunction with ACO's 749, 337 and 3023 until ACO 3035 or ACO 4150 is available.

SHT 1 OF 2

| ENGINEERING DEPT. | BASE INSTALLATION DEPT. | MANUFACTURING DEPT. | FACILITIES DEPT. |
|---|---|---|---|
| | | | |

ORIGINATING GROUP SUPERVISOR: G. R. Swanson

TELEPHONE: 5-6678

NOTE: Use form U3-4771-1000 if additional sheets are required

2-6340-0-1 6-1-62
REV.

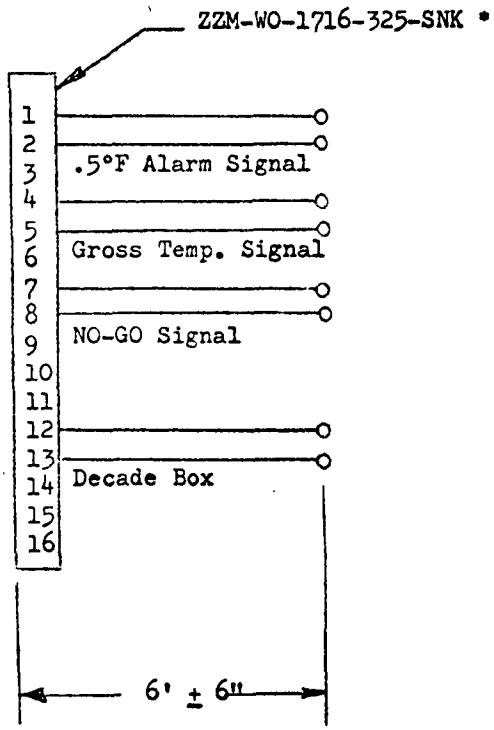


INSULATED #16 WIRE
ENDS OPTIONAL
LABEL WITH PIN NUMBERS
& FUNCTION AS NOTED
WIRE CLASS OPTIONAL

*or Equivalent

ACO 732
Page 2 of 2

# WS 133A

## ASSEMBLY & CHECKOUT EQUIPMENT REQUIREMENTS

ACO NUMBER 749

APPROVAL DATE 3-30-62

REVISION _____ DATE _____

EQUIPMENT TITLE Bimetal Thermometer
(Basic Noun First)

RESPONSIBLE DEPT. BI-MM

EQUIP. CLASSIFICATION SFC/OH

DESIGN REQMTS DOCUMENT _____

DWG NO. _____

TO BE USED AT:

| BASE | MAFB | EAFB | VAFB | STP III | PLT 77 | | | |
|---|---|---|---|---|---|---|---|---|
| DOC | D2-7648 | D2-7648 | D2-7871 | D2-9942 | D2-11162 | | | |
| | 1 | | 1 | | X | | | |

PURPOSE & JUSTIFICATION

To determine the temperature of the water in the reservoir during checkout of the Guidance Section Liquid Cooler (Fig. A 9278), at CSA.

This is "work around" equipment resulting from Action assignment OSB-3.

1 This is interim equipment until 4150 becomes available.

DESCRIPTION, REQUIREMENTS & RECOMMENDATIONS:

Range 25° to 125° F.

Accuracy ± 1% of full range.

The following equipment will satisfy this requirement:

Weston Bimetal Thermometer, Model 4310; stem length: 9 inches; 1/2" NPT, stainless steel connection nut.

ORIGINATING GROUP SUPERVISOR: G. D. Swanson

TELEPHONE: 5-5578

SHT 1 OF 1

| ENGINEERING DEPT. | BASE INSTALLATION DEPT. | MANUFACTURING DEPT. | FACILITIES DEPT. |
|---|---|---|---|
| | | | |

2-6340-0-1 6-1-62
REV.

WS 133A

# ASSEMBLY & CHECKOUT EQUIPMENT REQUIREMENTS

ACO NUMBER 773
APPROVAL DATE 2-20-62
REVISION _____ DATE _____

EQUIPMENT TITLE: Flow Meter

RESPONSIBLE DEPT. BI-[illegible] EQUIP. CLASSIFICATION SEG/CE
DESIGN RQMTS DOCUMENT _____ DWG NO. _____
TO BE USED AT:

| BASE | MAFB | EAFB | VAFB | STP III | PLT 77 | | | |
|---|---|---|---|---|---|---|---|---|
| DOC | D2-7648 | D2-7648 | D2-7671 | D2-9942 | D2-11162 | | | |
| | ▷ | | ▷ | | X | | | |

PURPOSE:

To provide means to measure water flow in the heat load circuit when conducting Acceptance Tests on the Guidance Section Liquid Cooler, Figure A 1214, at the CSA.

Ref: D2-10735, "AFTP - Cooler, Liquid, Guidance Section."

DESCRIPTION:

Range: 10 to 30 pounds of water per minute.

Accuracy: ± .5 pounds of water per minute.

Fisher Porter 1001505-4 is recommended, or equivalent.

▷ This is interim equipment which may be substituted in conjunction with ACO's 769,754, 719,4461,0593, 753,749,731,732 until ACO 4150, G&C Cooling Test Bench is available.

All components in contact with fluid shall be stainless steel, glass or PVC.

NOTE: Prior to use, this item shall be flushed with deionized water until the effluent contains less than 5 ppm of dissolved solids.

This item results from CSE-3.

Originating group supervisor: C. R. Sa[illegible]
Telephone: 5-6670

SHT 1 OF 1

| ENGINEERING DEPT. | BASE INSTALLATION DEPT. | MANUFACTURING DEPT. |
|---|---|---|
| [illegible] | [illegible] | [illegible] |

2-6340-0-1 6-1-62

BOEING NO. D2-11162
APP. I PAGE 35m

# WS 133A
# ASSEMBLY & CHECKOUT EQUIPMENT REQUIREMENTS

ACO NUMBER 753
APPROVAL DATE 2-22-62
REVISION _____ DATE _____

EQUIPMENT TITLE: Pressure Sensor
(Basic Noun First)

RESPONSIBLE DEPT. BI-121 EQUIP. CLASSIFICATION SEC/OH

DESIGN RQMTS DOCUMENT _____ DWG NO. _____

TO BE USED AT:

| BASE | MAFB | EAFB | VAFB | STP III | PLY 77 | | | |
|---|---|---|---|---|---|---|---|---|
| DOC | D2-7643 | D2-7643 | D2-7071 | D2-9942 | D2-11162 | | | |
| | ▷ | | ▷ | | X | | | |

PURPOSE & JUSTIFICATION:

To measure the outlet ("to missile") side of water pump package to Guidance Section when trouble shooting or conducting Acceptance Tests on Guidance Section Liquid Cooler (Figure A 1214).

Ref: D2-10735, "AFTP - Cooler, Liquid, Guidance Section."

DESCRIPTION, REQUIREMENTS & RECOMMENDATIONS:

Range: 0-30 PSIG

Accuracy: ± 1 PSIG

March, Type I, 30 lb. Range 3-1/2" Dia. CP Case or equivalent Pattern AND10050-4 connection is recommended.

▷ This is interim equipment which may be substituted in conjunction with ACO's 752, 754, 719, 769, 4461, 0593, 749, 753, 731, 732 until 4150, G&C Cooling Test Bench is available.

All components in contact with fluid shall be stainless steel, glass or PVC.

NOTE: Prior to use, this item shall be flushed with deionized water until the effluent contains less than 5 ppm of dissolved solids.

This item is a result of CSB-3.

ORIGINATING GROUP SUPERVISOR: G. R. Swanson
TELEPHONE: [illegible]

SHT 1 OF 1

| ENGINEERING DEPT. | BASE INSTALLATION DEPT. | MANUFACTURING DEPT. |
|---|---|---|
| [illegible] | [illegible] | [illegible] |

2-6340-0-1
REV. 6-1-62

BOEING NO. D2-11162
PAGE 35n

APP. II

WS 133A

# ASSEMBLY & CHECKOUT EQUIPMENT REQUIREMENTS

ACO NUMBER 75[illegible]
APPROVAL DATE 3-20-6[illegible]
REVISION _____ D. [illegible]

EQUIPMENT TITLE: Flow Meter (Basic Noun First)

RESPONSIBLE DEPT. [illegible]-12[illegible]
EQUIP. CLASSIFICATION [illegible]/OH

DESIGN RQMTS DOCUMENT no
DWG NO. no

TO BE USED AT:

| BASE | MAFB | EAFB | VAFB | STP III | PLT 77 | | | |
|---|---|---|---|---|---|---|---|---|
| DOC | D2-7648 | D2-7648 | D2-7871 | D2-9942 | D2-11162 | | | |
| | 1 | | 1 | | X | | | |

PURPOSE & JUSTIFICATION:

To provide means to measure water flow in the "to missile" circuit when conducting Acceptance Tests on the Guidance Section Liquid Cooler, Figure A (1214) at the CSA and to the water chiller when troubleshooting.

Ref: D2-10735 "AFTP - Cooler, Liquid, Guidance Section."

DESCRIPTION, REQUIREMENTS & RECOMMENDATIONS:

Range: 0.5 to 7.5 pounds of water per minute.

Accuracy: ± 0.2 pounds of water per minute.

1 This is interim equipment which may be substituted in conjunction with ACO's 752, 719, 769, 4461, 0593, 749, 753, 731, 732 until ACO 4150, G&C Cooling Test Bench is available.

2. Fisher Porter - 10C1501-1 as recommended, or equivalent.

All components in contact with fluid shall be stainless steel, glass or PVC.

NOTE: Prior to use, this item shall be flushed with deionized water until the effluent contains less than 5 ppm of dissolved solids.

SHT 1 OF 1

| ENGINEERING DEPT. | BASE INSTALLATION DEPT. | MANUFACTURING DEPT. |
|---|---|---|
| [illegible] | [illegible] | [illegible] |

2-6340-0-1 6-1-62

REV.

ORIGINATING GROUP SUPERVISOR: C. P. Swanson
TELEPHONE: 5-6670

NOTE: Use form LO-4378-1000 if additional sheets are required.

# WS 133A

# ASSEMBLY & CHECKOUT EQUIPMENT REQUIREMENTS

ACO NUMBER 769

APPROVAL DATE 4-20-62

REVISION _____ DATE _____

EQUIPMENT TITLE Reservoir
(Basic Noun First)

RESPONSIBLE DEPT. BI-MM EQUIP. CLASSIFICATION SFC/OH

DESIGN REQMTS DOCUMENT _____ DWG NO. 29-17757

TO BE USED AT:

| BASE | MAFB | EAFB | VAFB | STP III | PLT 77 | | | |
|---|---|---|---|---|---|---|---|---|
| DOC | D2-7648 | D2-7648 | D2-7871 | D2-9942 | D2-11162 | | | |
| | 1 | | 1 | | X | | | |

NOTE: Use form U3-[illegible] if additional sheets are required

PURPOSE & JUSTIFICATION

The reservoir will be used as a water supply and sump during Acceptance Tests on the Guidance Section Liquid Cooler (Figure A 1214) at the CSA.

Ref: D2-10735, "AFTP - Cooler, Liquid, Guidance Section".

DESCRIPTION, REQUIREMENTS & RECOMMENDATIONS:

The reservoir must have a 5 to 25 gallon capacity. It shall be made of stainless steel. A boss per AND 10050-10 with an AN 815-10 union-flared tube (or equivalent) shall be located near the lower extremity and one end of the reservoir to provide the water outlet. An AN 871-8 flange ( or a boss per drawing number 29-17757-2, optional) shall be located near the water outlet to accept the water chiller temperature sensor. An AND 10050-6 boss with an AN 824-6 tee-flared tube (or equivalent) shall be located near the top, and at the end opposite to the outlet, to provide for water inlet. Provision shall be made to locate a temperature sensor near the water outlet boss. The reservoir shall be covered with 1/2 inch thick thermal insulation with a conductivity of 0.28 BTU in/ft$^2$ hr°F at 40°F. (Armaflex insulation by Armstrong Cork Co. is recommended).

1 This is interim equipment which may be substituted in conjunction with ACO's 752, 754, 719, 769, 750, 751, 749, 753, until ACO 4150, G&C cooling Test Bench is available.

NOTE: Prior to use, this item shall be flushed with deionized water until the effluent contains less than 5 ppm of dissolved solids.

ORIGINATING GROUP SUPERVISOR: G. R. Swanson

TELEPHONE: -5670

SHT 1 OF 3

| ENGINEERING DEPT. | BASE INSTALLATION DEPT. | MANUFACTURING DEPT. | FACILITIES DEPT. |
|---|---|---|---|
| | | | |

2-6340-0-1 6-1-62
REV.

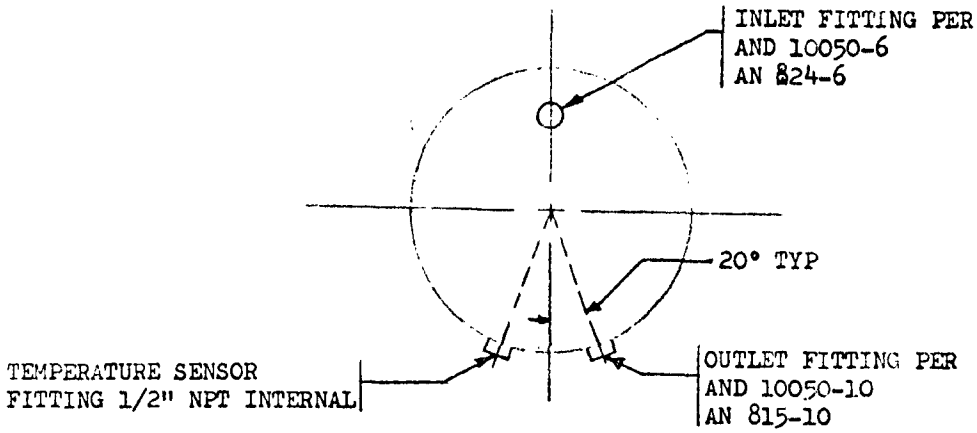


plan view

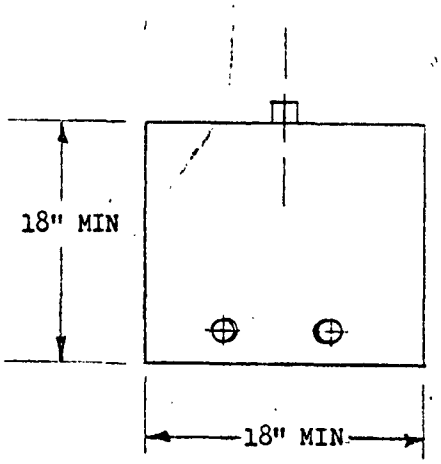


NOTES:

1. MATERIAL: 300 SERIES STANLESS
   THICKNESS OPTIONAL

2. INSULATION: 1/2 INCH THICK CLOSED CELL RUBBER
   "ARMAFLEX" BY ARMSTRON CORK CO.
   SEAL ALL JOINTS WITH "ARMSTRONG 520"
   CEMENT. COVER ENTIRE TANK

3. CLEANLINESS: FLUSH TANK WITH SOLVENTS AND/OR DETERGENTS
   REQUIRED TO LOOSEN AND ALL SCALE AND OTHER
   FOREIGN MATERIALS. FLUSH WITH HOT
   (MINIMUM 180°F) WATER.

4. GENERAL: CAP ALL FITTING WITH APPROPRIATE
   STAINLESS STEEL PLUGS AND/OR CAPS.

ACO 769
Sheet 2 of 3

U3-4071-1000 6-1-62

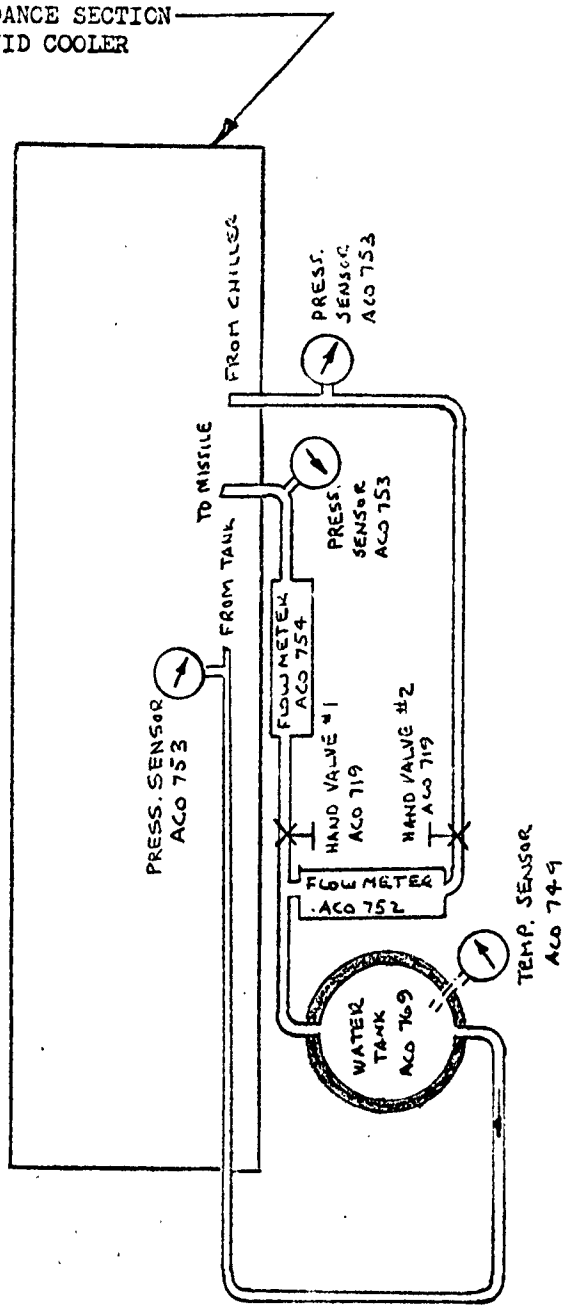


SCHEMATIC SHOWING WATER TANK, ACO 769, IN THE CIRCUIT USED TO CONDUCT FUNCTIONAL TEST ON THE GUIDANCE SECTION LIQUID COOLER.

ACO 769
Page 3 of 3

474

# WS 133A

# ASSEMBLY & CHECKOUT EQUIPMENT REQUIREMENTS

ACO NUMBER 929

APPROVAL DATE 5-22-62

REVISION _____ DATE _____

EQUIPMENT TITLE TEST SET, POWER SUPPLY
(Basic Noun First)

RESPONSIBLE DEPT. Manufacturing EQUIP. CLASSIFICATION BATE

DESIGN REQMTS DOCUMENT None DWG NO. N.A.

TO BE USED AT:

| BASE | MAFB | EAFB | VAFB | STP III | PLT 77 | | | |
|---|---|---|---|---|---|---|---|---|
| DOC | D2-7648 | D2-7648 | D2-7871 | D2-9942 | D2-11162 | | | |
| | X | X | X | X | X | | | |

NOTE: Use form U3-4071-1000 if additional sheets are required

PURPOSE & JUSTIFICATION

It is required that a power supply test set be provided to facilitate functional testing of the portable batteries supplied with the Explosive Set Circuitry Test Set (Figure A #3007 and #7679). This test fixture shall have the capability of simulating no-load and full load condition and shall provide points by which the battery performance can be monitored during load testing.

The functional test requirements using this equipment are shown in D2-12054 (all bases.)

DESCRIPTION, REQUIREMENTS & RECOMMENDATIONS:

Tooling drawing MISC 10-20994 has been provided for use to satisfy this same requirement during in-plant testing.

A part identical to Tooling drawing MISC 10-20994 will satisfy this requirement.

This item is a small portable metal box containing switches, jacks, and resistors as shown on sheet 2 and 3 of this ACO. A switch connects jack "A" to jack "B" through either a 100 or a 400 resistor and an "on-off" switch.

ORIGINATING GROUP SUPERVISOR: _____

TELEPHONE: _____

SHT 1 OF 3

| ENGINEERING DEPT. | BASE INSTALLATION DEPT. | MANUFACTURING DEPT. | FACILITIES DEPT. |
|---|---|---|---|
| | | | |

2-6340-0-1 8-17-62
REV.

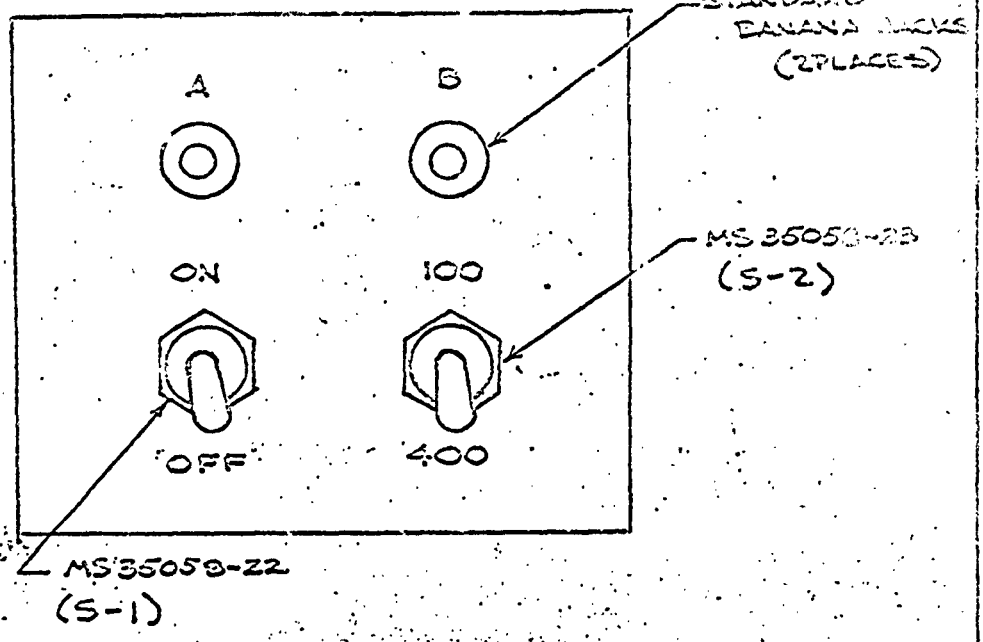


POWER SUPPLY TEST SET

ACO 929
SHT 2 OF 3

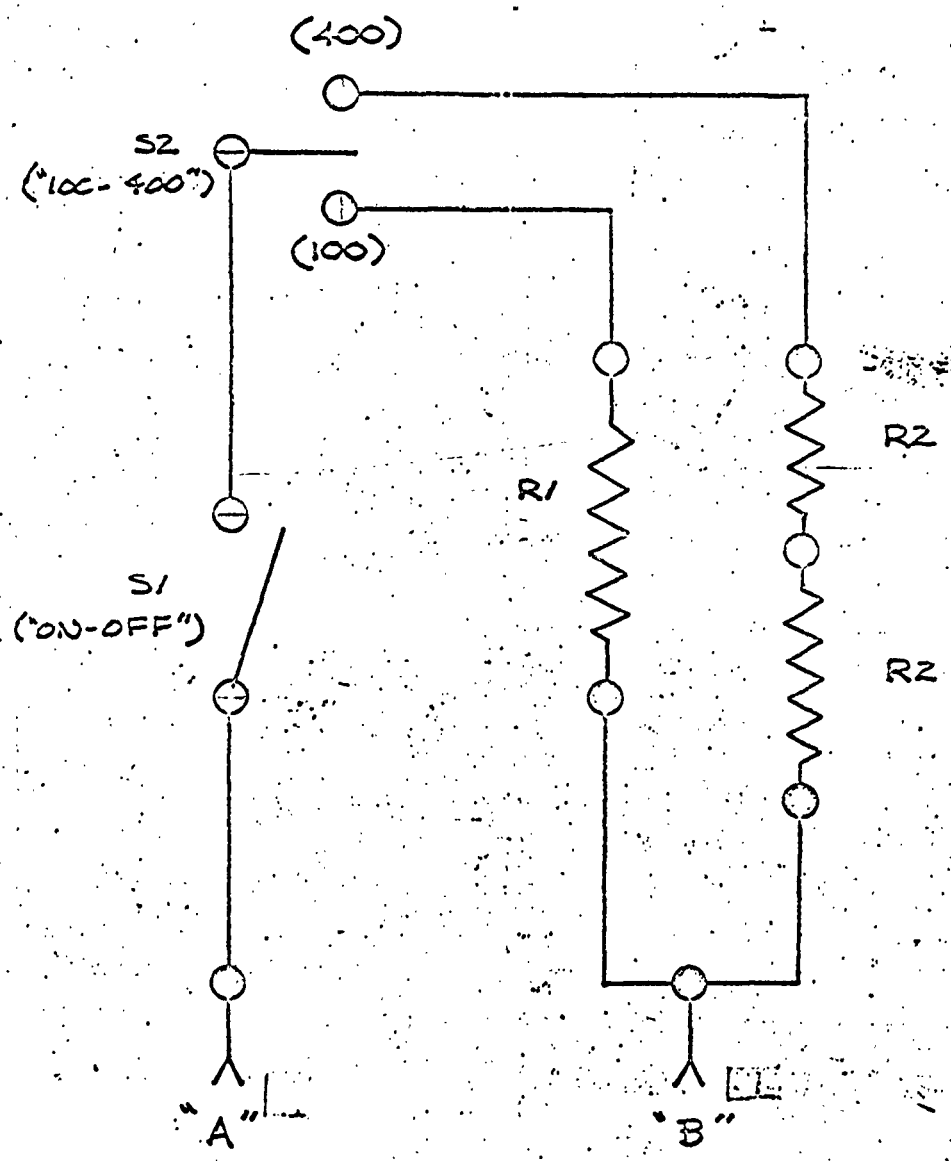


WIRING DIAGRAM

| | |
|---|---|
| $S_2$ | MS35058-23 |
| $S_1$ | MS35058-22 SPDT |
| $R_2$ | 200 Ω ±3% |
| R1 | 100 Ω ±1% 10 WATT |

ACO 929
SHT 3 OF 3

9-14-2

WS 133A

# ASSEMBLY & CHECKOUT EQUIPMENT REQUIREMENTS

ACO NUMBER 907

APPROVAL DATE 4-20-62

REVISION B DATE 11-20-62

EQUIPMENT TITLE Resistor Decade
(Basic Noun First)

RESPONSIBLE DEPT. EID EQUIP. CLASSIFICATION SFC/OH

DESIGN REQMTS DOCUMENT _____ DWG NO. _____

TO BE USED AT:

| BASE | MAFB | EAFB | VAFB | STP III | PLT. 77 | | |
|---|---|---|---|---|---|---|---|
| DOC | D2-7643 | D2-7643 | D2-7871 | D2-9942 | D2-11162 | | |
| | X | | X | | X | | |

PURPOSE & JUSTIFICATION

The decade resistor is required to furnish simulated loads for separate functional tests of the following items:

a. Safety and Arming Device Test Set (Figure A 13)

b. Explosive Set Circuitry Test Set and Test Leads (Figure A 9207)

c. CTLI Downstage Electrical System Test Set (Figure A 9116) (Ref: D2-9835)

d. Test Set Alarm AN/GSM-59 (Fig. A 3109) (Ref: D2-9833)

DESCRIPTION, REQUIREMENTS & RECOMMENDATIONS:

The functional test document for the Aerojet-General Test Set (Figure A 13) requires a range of 0.01 ohms to 1000 ohms.

The following listed equipment will satisfy this requirement.
Shallcross Manufacturing Co. P/N 817B
Gray Instrument Model E1144A
General Radio Model 1432-T

SHT 1 OF 1

| ENGINEERING DEPT. | BASE INSTALLATION DEPT. | MANUFACTURING DEPT. | FACILITIES DEPT. |
|---|---|---|---|
| [signature] | [signature] | [signature] | [signature] |

2-6340-0-1

REV. 7-11-63



ORIGINATING GROUP SUPERVISOR: G. A. Staples Rev B: G. A. Staples
TELEPHONE: 5-6471

89th

# WS 133A

# ASSEMBLY & CHECKOUT EQUIPMENT REQUIREMENTS

ACO NUMBER 935

APPROVAL DATE 5-22-62

REVISION A DATE 7-31-62

EQUIPMENT TITLE TEST TOOL-TEST SET, EXPLOSIVE SET CIRCUITRY
(Basic Noun First)

RESPONSIBLE DEPT. Engineering EQUIP. CLASSIFICATION

DESIGN REQMTS DOCUMENT None DWG NO. N.A.

TO BE USED AT:

| BASE | MAFB | EAFB | VAFB | STP III | PLT 77 | VAFB CTL1 | | |
|---|---|---|---|---|---|---|---|---|
| DOC | D2-7643 | D2-7643 | D2-7871 | D2-9942 | D2-11162 | D2-9833 | | |
| | X | X | X | X | X | X | | |

PURPOSE & JUSTIFICATION

It is required that test tool for the Test Set, Explosive Set Circuitry (Figure A 3007 and 7679) be provided to facilitate the periodic calibration of the test set. This test tool shall have the capability of providing the input and output measuring equipment access to monitor any pair combination of pins on the test set connectors.

The functional test requirements using this equipment are shown in D2-12054 (all bases).

DESCRIPTION, REQUIREMENTS & RECOMMENDATIONS:

Tooling drawing TSJ 10-20994 has been provided for use to satisfy this same requirement during in-plant testing.

A part similar to TSJ 10-20994 will satisfy this requirement.

This item is a small portable metal box with 2 connectors, four selector switches and 6 jacks, as shown on sheets 2 and 3. It is wired so jacks E and F are connected to pins 36 and 37 respectively of P1, jacks A & B can be connected through switches S4 and S3 respectively to any other pin on P1, and similarly jacks C and D can be connected through S2 and S1 to any pin on P2.

ORIGINATING GROUP SUPERVISOR: STAPLES
TELEPHONE: 5-6434

SHT 1 OF 3

| ENGINEERING DEPT. | BASE INSTALLATION DEPT. | MANUFACTURING DEPT. | FACILITIES DEPT. |
|---|---|---|---|
| Ellen J. Hollister | [illegible] | A. E. [illegible] | R. [illegible] |

2-6340-0-1
REV.

1-11-63

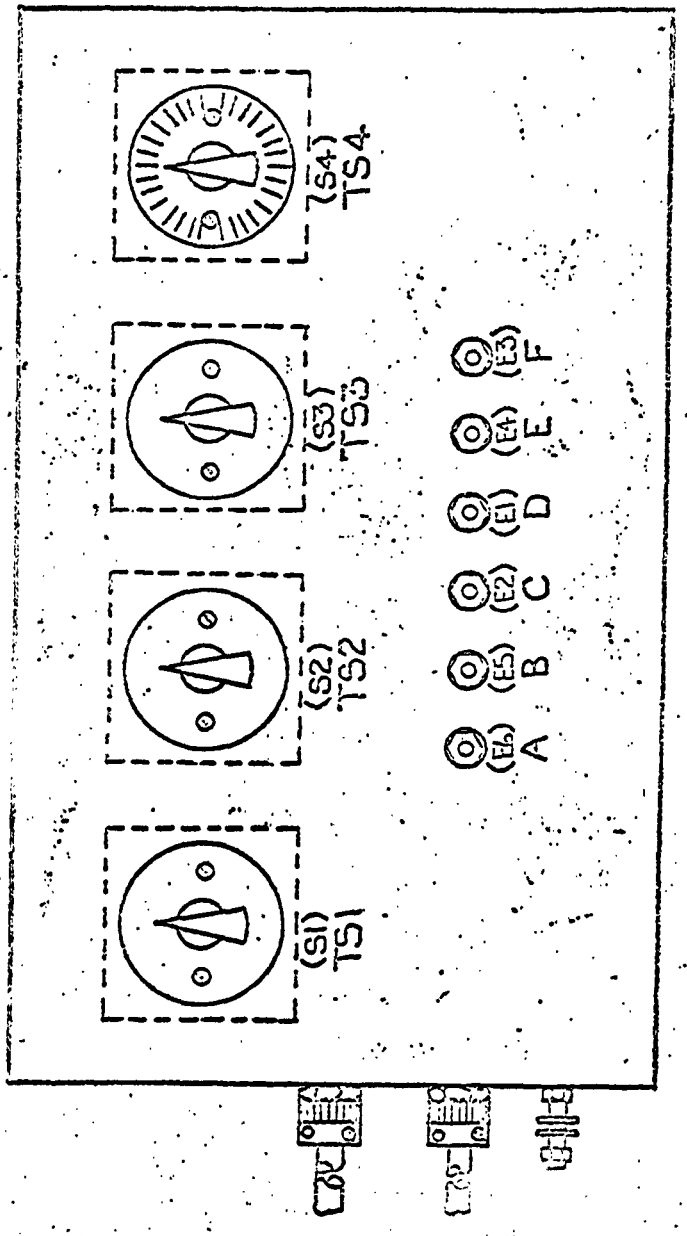


ACO 935
Page 2 of 3

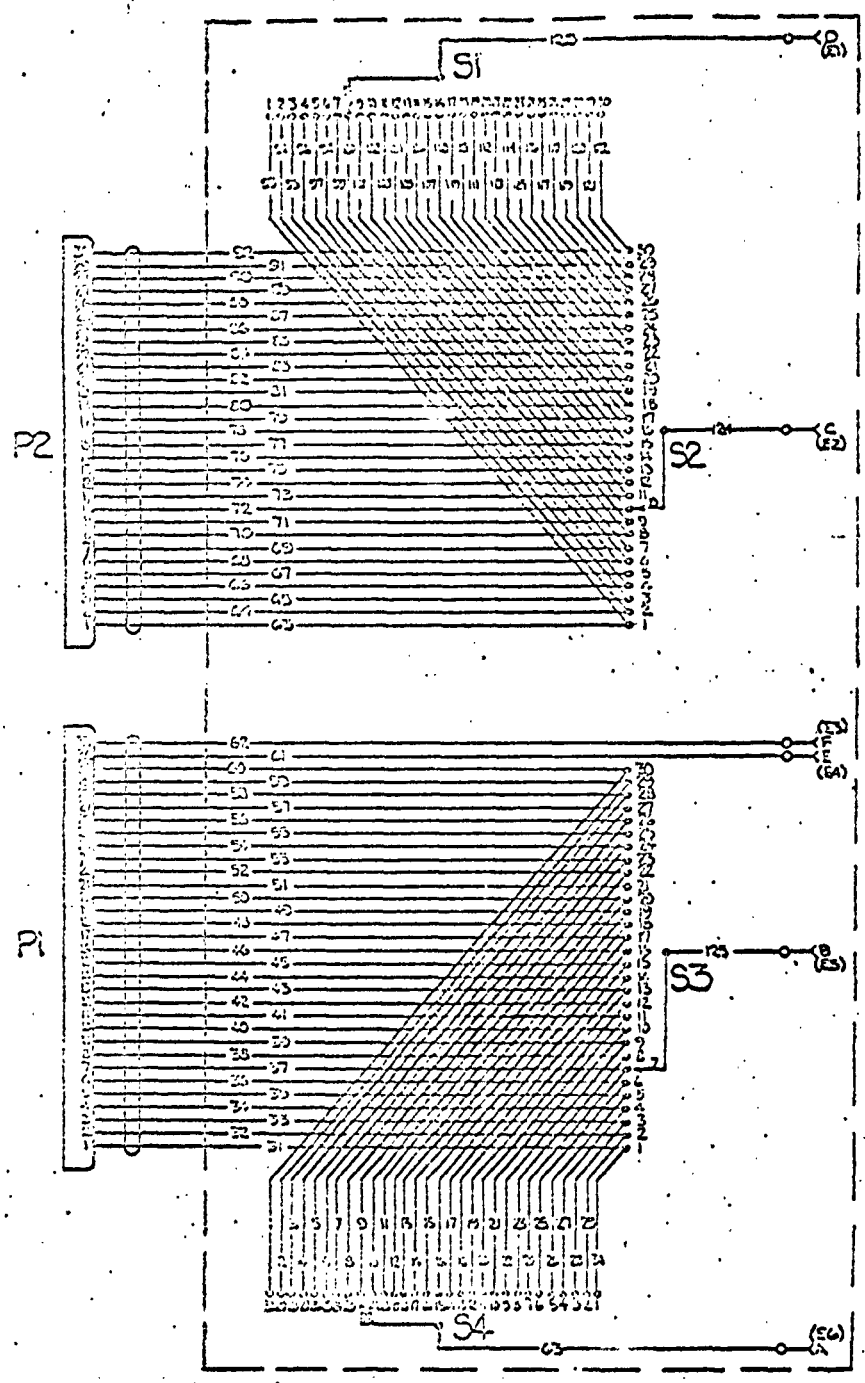


WIRING DIAGRAM
SCHEMATIC
LAST WIRE NO. 125

ACO 935
Page 3 of 3



1-11-63

124

# WS 133A

## ASSEMBLY & CHECKOUT EQUIPMENT REQUIREMENTS

ACO NUMBER 0565

APPROVAL DATE 1-23-62

REVISION _____ DATE _____

EQUIPMENT TITLE Fixture, Support, G&C Section
(Basic Noun First)

RESPONSIBLE DEPT. Engineering EQUIP. CLASSIFICATION ACO/MGE Pec.

DESIGN REQMTS DOCUMENT _____ DWG NO. _____

TO BE USED AT:

| BASE | MAFB | EAFB | VAFB | STP III | PLT 77 | | | |
|---|---|---|---|---|---|---|---|---|
| DOC | D2-7648 | D2-7648 | D2-7871 | D2-9942 | D2-11162 | | | |
| | X | | X | | X | | | |

NOTE: Use form U3-4071-1003 if additional sheets are required

PURPOSE & JUSTIFICATION

A requirement exists for support and alignment of the N10 G&C Section during functional acceptance and verification tests in G&C Test Area of CSA.

DESCRIPTION, REQUIREMENTS & RECOMMENDATIONS:

It is recommended that the Fixture, Support, G&C Section be provided to satisfy the above noted requirement. Fixture must be capable of supporting the combined weight of the N10 G&C Section (Fig. A 6201) and the attached Support Ring (Fig. A 617) in a manner allowing access for test cable attachment. A means is required to establish and maintain a level attitude within ± ½°. It is required that the G&C Section be located at a latitude known to ±15 arc secs. and to be oriented to a given azimuth within a 1° range.

This item is identical to Fig. A 565.

ORIGINATING GROUP SUPERVISOR: _____ TELEPHONE: _____

SHT 1 OF 1

| ENGINEERING DEPT. | BASE INSTALLATION DEPT. | MANUFACTURING DEPT. | FACILITIES DEPT. |
|---|---|---|---|
| | | | |

159

2-6340-0-1 6-1-62
REV.

WS 133A

# ASSEMBLY & CHECKOUT EQUIPMENT REQUIREMENTS

ACO NUMBER 0583

APPROVAL DATE 3-16-62

REVISION _____ DATE _____

EQUIPMENT TITLE Kit, Module Connector Alinement
(Basic Noun First)

RESPONSIBLE DEPT. Engineering EQUIP. CLASSIFICATION ACO/MSE-Peculiar

DESIGN REQMTS DOCUMENT _____ DWG NO. _____

TO BE USED AT:

| BASE | MAFB | EAFB | VAFB | STP III | PLT 77 | | | |
|---|---|---|---|---|---|---|---|---|
| DOC | D2-7648 | D2-7648 | D2-7871 | D2-9942 | D2-11162 | | | |
| | X | X | X | | X | | | |

NOTE: Use form [illegible] if additional sheets are required

PURPOSE & JUSTIFICATION

A requirement exists for a means to aline the module connectors within drawers of the C91P Programming Test Set (Figure A 624), C89P Guidance and Control Test Group (Figure A 622), C24P Missile Targeting Set (Figure A 603), and C53P Guidance and Control Coupler (Figure A 604). The module connectors in these equipments are securely fastened to the drawer chassis and are not free to position themselves with the module pins when a module is inserted. The tolerance allowable is .010 inches. To prevent damage to the module connector and to the module pins, the connectors must be alined prior to the installation of the module if misalinement is suspected, or if the module connector has been loosened, removed or replaced.

DESCRIPTION, REQUIREMENTS & RECOMMENDATIONS

It is recommended that a module connector alignment kit be used for the performance of this function. The kit will containe three (3) module connector alinement tools. Two (2) tools will be required for the C91P Programming Test Set for the two (2) different size modules, one (1) 5 inches b6 4 inches and one (1) 5 inches by 10 inches. One (1) tool will be required for the C89P Guidance and Control Test Group, C53P Guidance and Control Coupler, and the C24P Missile Targeting Set for the standard 5-1/2 X 6 inch board.

NOTE: This item is identical to Figure A 583.

ORIGINATING GROUP SUPERVISOR: O. A. Severide

TELEPHONE: 5-5022

SHT ____ OF ____

| ENGINEERING DEPT. | BASE INSTALLATION DEPT. | MANUFACTURING DEPT. | FACILITIES DEPT. |
|---|---|---|---|
| | | | |

2-6340-0-1 6-1-62
REV.

473

# WS 133A

## ASSEMBLY & CHECKOUT EQUIPMENT REQUIREMENTS

ACO NUMBER 0593

APPROVAL DATE

REVISION A DATE 2-23-62

EQUIPMENT TITLE Resistance Box, Decade
(Basic Noun First)

RESPONSIBLE DEPT. BID EQUIP. CLASSIFICATION ACO/MGE-SFC/OH

DESIGN REQMTS DOCUMENT None DWG NO. N. A.

TO BE USED AT:

| BASE | MAFB | EAFB | VAFB | STP III | PLT 77 | | | |
|---|---|---|---|---|---|---|---|---|
| DOC | D2-7648 | D2-7648 | D2-7871 | D2-9942 | D2-11162 | | | |
| | X | X | X | | X | | | |

PURPOSE & JUSTIFICATION

1. This item is required for testing of Figure A item 717, C21 Alignment Group Portable Test Set. This item is used to load input and output signals during testing to avoid having large stocks of individual preceision resistors.

2. This item is required for testing Figure A item 1214, Guidance Section Liquid Cooler at CSA, and 9278, Liquid Cooling Equipment, G&C Ground.

DESCRIPTION, REQUIREMENTS & RECOMMENDATIONS:

It is recommended that a TS-578 or equivalent be furnished to fill this requirement.

This item is intended to be equivalent to, and functionally interchangeable with Figure A 593, including those physical dimensions and features necessary for proper functioning and use.

ORIGINATING GROUP SUPERVISOR: Paul Lors

TELEPHONE: 5-3710

SHT 1 OF 1

| ENGINEERING DEPT. | BASE INSTALLATION DEPT. | MANUFACTURING DEPT. | FACILITIES DEPT. |
|---|---|---|---|
| | | | |

2-6340-0-1 6-1-62
REV.

HLH

# WS 133A
# ASSEMBLY & CHECKOUT EQUIPMENT REQUIREMENTS

ACO NUMBER 0599
APPROVAL DATE 12-19-61
REVISION _____ DATE _____

EQUIPMENT TITLE: Simulator, Load
(Basic Noun First)

RESPONSIBLE DEPT. Engineering EQUIP. CLASSIFICATION ACO/MGE-peculiar

DESIGN RQMTS DOCUMENT None DWG NO. N. A.

TO BE USED AT:

| BASE | MAFB | EAFB | VAFB | STP III | PLT 77 | | | |
|---|---|---|---|---|---|---|---|---|
| DOC | D2-7648 | D2-7648 | D2-7871 | D2-9942 | D2-11162 | | | |
| | X | X | X | | X | | | |

PURPOSE & JUSTIFICATION:

This item is required for pre-delivery testing and periodic testing of G&C portable DC Power Supply, C-95 Fig. A Item 667. It simulates the starting load of the G& C section to the Figure A 667 Power Supply during testing of the 667.

DESCRIPTION, REQUIREMENTS & RECOMMENDATIONS:

This item is identical to Figure A item 599.

It is recommended that a Rocketdyne Model 61032-Q-1 be furnished to fill this requirement.

Capabilities required: 2 Sec +.5-0 Sec Timing of 28 VDC power.

Load (25 watt) .128 ohms ±3%.

Load (250 watt) 2.9 ohms ±1%.

NOTE: Use form LO-4071-1000 if additional sheets are required

ORIGINATING GROUP SUPERVISOR: P. Long
TELEPHONE: 5-3310

SHT 1 OF 1

| ENGINEERING DEPT. | BASE INSTALLATION DEPT. | MANUFACTURING DEPT. |
|---|---|---|
| [signature] | [signature] | [signature] |

2-6340-0-1

REV. 2-1-62

# WS 133A

## ASSEMBLY & CHECKOUT EQUIPMENT REQUIREMENTS

ACO NUMBER 0608

APPROVAL DATE

REVISION DATE

EQUIPMENT TITLE Cover, Hoisting Sling (H6A)
(Basic Noun First)

RESPONSIBLE DEPT. BI-MM

EQUIP. CLASSIFICATION ACO/MGE-Peculiar

DESIGN REQMTS DOCUMENT None

DWG NO. 56704-305 (Autonetics)

TO BE USED AT:

| BASE | MAFB | EAFB | VAFB | STP III | PLT 77 | | | |
|---|---|---|---|---|---|---|---|---|
| DOC | D2-7648 | D2-7648 | D2-7871 | D2-9942 | D2-11162 | | | |
| | | | | | X | | | |

PURPOSE & JUSTIFICATION

A means is required to lift the G&C section on the H4A Handling Ring from the G&C section container and place on the Autonavigator Hand Truck in the CPA for G&C battery emplacement; and, when required, for G&C section test.

DESCRIPTION, REQUIREMENTS & RECOMMENDATIONS:

It is recommended that the Hoisting Sling and Cover (H6A) be provided to perform the above handling since it is designed to mate with the H4A Handling Ring and has a center attach ring on the top which will mate with the Portable Hoist (ACO 405).

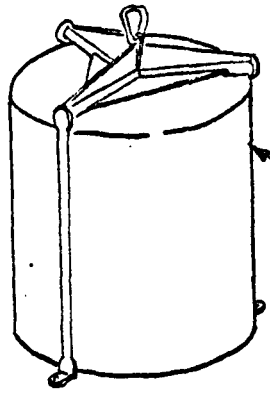

Autonavigator Sling and Cover (Type H6A)

This item is identical to Fig. A 608.

SHT 1 OF 1

ORIGINATING GROUP SUPERVISOR: O. A. Severide

TELEPHONE: 5-5022

| ENGINEERING DEPT. | BASE INSTALLATION DEPT. | MANUFACTURING DEPT. | FACILITIES DEPT. |
|---|---|---|---|
| | | | |

2-6340-0-1 REV. 6 1-62

WS 133A

# ASSEMBLY & CHECKOUT EQUIPMENT REQUIREMENTS

ACO NUMBER 0622
APPROVAL DATE 1-23-62
REVISION _____ DATE _____

EQUIPMENT TITLE: Test Group, Guidance & Control C89P
(Basic Noun First)

RESPONSIBLE DEPT. Engineering
EQUIP. CLASSIFICATION ACO/MGE REC
DESIGN RQMTS DOCUMENT _____
DWG NO. 64600-305 (Aut.)
TO BE USED AT:

| BASE | MAFB | EAFB | VAFB | STP III | PLT 77 | | | |
|---|---|---|---|---|---|---|---|---|
| DOC | D2-7648 | D2-7648 | D2-7871 | D2-9942 | D2-11162 | | | |
| | X | | X | | X | | | |

PURPOSE & JUSTIFICATION:

A requirement exists to perform functional acceptance and verification tests on spare N10 G&C Sections (Ref. Fig. A 6201) in the G&C Test Area of the CSA during assembly and checkout.

DESCRIPTION, REQUIREMENTS & RECOMMENDATIONS:

It is recommended that the Test Group, Guidance & Control, C89P be provided for use in conjuction with the C91P Programming Test Set (Ref. Fig. A 624). The C89P shall consist of the following component drawers: Computer Coupler, Remote Switching Analog Control, Servo Analyzer, Signal Conditioner, and Power Supply. The C89P shall also include (5) Loose Equipment Cables for interconnect of C89P with C91B.

This item is identical with Fig. A 622.

SHT 1 OF 1

| ENGINEERING DEPT. | BASE INSTALLATION DEPT. | MANUFACTURING DEPT. |
|---|---|---|
| [signature] | [signature] | [signature] |

ORIGINATING GROUP SUPERVISOR: J. K. Sherson
TELEPHONE: AT-4-5560

2-6340-0-1
REV. 6-1-62

WS 133A

# ASSEMBLY & CHECKOUT EQUIPMENT REQUIREMENTS

ACO NUMBER 0623
APPROVAL DATE 1-30-62
REVISION _____ DATE _____

EQUIPMENT TITLE: Test Group, Ground Electronics System C90P (Basic Noun First)

RESPONSIBLE DEPT. Manufacturing
EQUIP. CLASSIFICATION ACO/MGE/PEC
DESIGN RQMTS DOCUMENT _____
DWG NO. 7752-850001
TO BE USED AT:

| BASE | MAFB | EAFB | VAFB | STP III | PLT 77 | | | |
|---|---|---|---|---|---|---|---|---|
| DOC | D2-7648 | D2-7648 | D2-7871 | D2-9942 | D2-11162 | | | |
| | X | X | X | | X | | | |

PURPOSE & JUSTIFICATION:

A requirement exists at the CSA for an adapter to operate in conjunction with the C91P programming Test Set Fig A 624, to functionally test drawer assemblies and isolate malfunctions to a circuit card.

The Test Group will isolate malfunctions and calibration errors in a number of other test instruments and equipment componenets, and functional test the following Fig A items - 603, 622, 624, 695 and the G&C Coupler.

DESCRIPTION, REQUIREMENTS & RECOMMENDATIONS:

It is recommended that the Ground Electronics System Test Group (C90P) be provided to fulfill the requirements. The test group consists of a bench type console which when used in conjunction with Test Center C91P enables rapid checkout of the drawer assemblies.

The test group will include the necessary interconnecting cables and connectors.

This item is identical to Fig A 623.

NOTE: Use form LO-4071-1000 if additional sheets are required.

ORIGINATING GROUP SUPERVISOR: J. K. Sherson
TELEPHONE: AT-4-5860

SHT 1 OF 1

| ENGINEERING DEPT. | BASE INSTALLATION DEPT. | MANUFACTURING DEPT. |
|---|---|---|
| M. H. Barton | [signature] | A. E. [signature] |

2-6340-0-1
REV. 6-1-62

BOEING NO. D2-11162

WS 133A

# ASSEMBLY & CHECKOUT EQUIPMENT REQUIREMENTS

ACO NUMBER 0624
APPROVAL DATE 1-30-62
REVISION _____ DATE _____

EQUIPMENT TITLE: Programming Test Set C91P
(Basic Noun First)

RESPONSIBLE DEPT. Engineering
EQUIP. CLASSIFICATION ACO/MGE/PEC
DESIGN RQMTS DOCUMENT _____
DWG NO. 55062-107 (Autonetics)
TO BE USED AT:

| BASE | MAFB | EAFB | VAFB | STP III | PLT 77 | | | |
|---|---|---|---|---|---|---|---|---|
| DOC | D2-7648 | D2-7648 | D2-7871 | D2-9942 | D2-11162 | | | |
| | X | X | X | | X | | | |

PURPOSE & JUSTIFICATION:

A requirement exits to perform acceptance and verification tests on the following Fig A items 604, 622, 695, 717, 603, 623, 624, 4012, 3092, 3109, 1201, 1213, 1228, 1251, 1265, 4018, 6201 in the G&C Test Area, Boeing Drawer maintenance and test area, Autonetics Drawer maintenance and test area of the CSA during Functional Test.

DESCRIPTION, REQUIREMENTS & RECOMMENDATIONS:

It is recommended the programming test set C91P be provided, to fulfill the requirement for a semi-automatic checkout system capable of verification and fault isolation of electronic sub-assy's of Aero-space Ground Equipment. This equipment when used in conjunction with the proper adapters, should be capable of functionally checking the NS10 Inertial Navigation Set, assy's of the C53 Guidance and Control Coupler, S&M, SCN, C24, and the adapters required to perform the above tests. It should also incorporate programmed self test capability to identify failures to the drawer level assy.

The test set should be capable of programming a pre-determined sequence of tests so that testing may be done in a logical, efficient and repeatable manner.

This item is identical to Fig A 624.

NOTE: Use form LO-4071-1000 if additional sheets are required.

ORIGINATING GROUP SUPERVISOR: J. K. Sherson
TELEPHONE: AT-4-5860

SHT 1 OF 1

| ENGINEERING DEPT. | BASE INSTALLATION DEPT. | MANUFACTURING DEPT. |
|---|---|---|
| A. H. Burton | [illegible] | A. E. [illegible] |

2-6340-0-1
6-1-62
REV.

WS 133A

# ASSEMBLY & CHECKOUT EQUIPMENT REQUIREMENTS

ACO NUMBER 0667

APPROVAL DATE 1-16-62

REVISION _____ DATE _____

EQUIPMENT TITLE Power Supply, DC, Portable, C-95
(Basic Noun First)

RESPONSIBLE DEPT. Engineering

EQUIP. CLASSIFICATION ACO/MGE/Peculiar

DESIGN REQMTS DOCUMENT ----

DWG NO. 55063-107 (A/N)

TO BE USED AT:

| BASE | MAFB | EAFB. | VAFB | STP III | PLT 77 | | | |
|---|---|---|---|---|---|---|---|---|
| DOC | D2-7648 | D2-7648 | D2-7871 | D2-9942 | D2-11162 | | | |
| | X | X | X | X | X | | | |

NOTE: Use form U3-4071-1000 if additional sheets are required

PURPOSE & JUSTIFICATION

To provide starting power to the air-bearing gyros, blower, and frequency standard within the G&C section during startup of an emplaced missile or test of a G&C section.

DESCRIPTION, REQUIREMENTS & RECOMMENDATIONS:

A portable Battery Power Supply is recommended to satisfy this requirement. It will consist of a rechargeable battery pack, voltage divider and recharging circuitry. Two output voltages are provided.

1. 42 ± 1.5 VDC@ 40MA for a minimum period of 2 seconds to stabilize the G&C frequency standard.

2. 40-45 VDC @ 17 amps for a minimum period of 2 seconds to start and sustain operation of the gyros and fan.

Cables are provided, with this power supply, to interface with the C53P, (Figure A 604) or C89 (Figure A 622) and an external power source for recharging.

NOTE: This item shall be identical to Figure A 667.

ORIGINATING GROUP SUPERVISOR: R. Collins

TELEPHONE: _____

SHT 1 OF 1

| ENGINEERING DEPT. | BASE INSTALLATION DEPT. | MANUFACTURING DEPT. | FACILITIES DEPT. |
|---|---|---|---|
| | | | |

2-6340-0-1 6-1-62
REV.

# WS 133A
# ASSEMBLY & CHECKOUT EQUIPMENT REQUIREMENTS

ACO NUMBER 3009
APPROVAL DATE 1-23-62
REVISION _____ DATE _____

EQUIPMENT TITLE: Puller, Printed Circuit Card
(Basic Noun First)

RESPONSIBLE DEPT. Engineering
EQUIP. CLASSIFICATION ACO/MGE-Peculiar

DESIGN RQMTS DOCUMENT None
DWG NO. 25-27424

TO BE USED AT:

| BASE | MAFB | EAFB | VAFB | STP III | PLT 77 | | | |
|---|---|---|---|---|---|---|---|---|
| DOC | D2-7648 | D2-7648 | D2-7871 | D2-9942 | D2-11162 | | | |
| | X | X | X | | X | | | |

PURPOSE & JUSTIFICATION:

A requirement exists for means to remove and install Printed Circuit Assembly cards without damaging assemblies or subjecting personnel to physical injury. Used to remove printed circuit assemblies from their connectors when repairing drawers etc in the following Fig A items: 1201, 1218, 1284, 1289, 1243, 1296 and 4018.

Used in the CSA drawer maintenance area during A&CO task.

DESCRIPTION, REQUIREMENTS & RECOMMENDATIONS:

It is recommended that a hand tool be provided which will mate with the Printed Circuit Assembly Card to insure proper insertion and extraction without bending cards.

A force of 20 pounds may be required to remove cards from all items except Fig A 1201. Fig A 1201 will require a force of 95 pounds.

This item is identical to Fig A 3009.

NOTE: Use form LO-4071-1000 if additional sheets are required.

ORIGINATING GROUP SUPERVISOR: J. K. Sherson
TELEPHONE: AT-4-5860

SHT 1 OF 1

| ENGINEERING DEPT. | BASE INSTALLATION DEPT. | MANUFACTURING DEPT. |
|---|---|---|
| [signature] | [signature] | [signature] |

2-6340-0-1 6-1-62
REV.

184

# WS 133A
# ASSEMBLY & CHECKOUT EQUIPMENT REQUIREMENTS

ACO NUMBER 3035
APPROVAL DATE 12-12-61
REVISION _____ DATE _____

EQUIPMENT TITLE: Test Set, Control Circuitry Temperature
(Basic Noun First)

RESPONSIBLE DEPT. Engineering EQUIP. CLASSIFICATION ACO/MGE-peculiar

DESIGN RQMTS DOCUMENT None DWG NO. N. A.

TO BE USED AT:

| BASE | MAFB | EAFB | VAFB | STP III | PLT 77 | | | |
|---|---|---|---|---|---|---|---|---|
| DOC | D2-7648 | D2-7648 | D2-7871 | D2-9942 | D2-11162 | | | |
| | X | X | X | | | | | |

PURPOSE & JUSTIFICATION:

A requirement exists for a means to provide precise variable resistances to the G&C environmental control system control circuitry, during fault isolation testing, for the purpose of checking control bridge balance and alarm and NO-GO circuitry response. It must also be capable of receiving and indicating the error signal outputs (both in magnitude and polarity) from the control amplifiers of both controls so as to establish the accuracy of the amplifier.

DESCRIPTION, REQUIREMENTS & RECOMMENDATIONS:

It is recommended that a portable test set be designed which is capable of simulating input resistances into the control circuitry of the chiller unit and the G&C temperature control unit of such magnitudes as to permit evaluation of the bridge balance and alarm and NO-GO circuit response; amplifier condition; coolant level; temperature and flow. The test set shall include the following:

1. A flow meter capable of measuring flow from 3.5 pounds per minute to 20 pounds per minute.

2. A mercury thermometer calibrated in .20°F ± 1°F accuracy in the range 30°F to 50°F.

3. A dip stick to measure coolant level in lower storage tank.

This item is identical to Fig. A 3035.

SHT 1 OF 1

| ENGINEERING DEPT. | BASE INSTALLATION DEPT. | MANUFACTURING DEPT. |
|---|---|---|
| [signature] | [signature] | [signature] |

ORIGINATING GROUP SUPERVISOR: J. K. Sherson
TELEPHONE: AT 4-5860

NOTE: Use form LO-4071-1070 if additional sheets are required

2-6340-0-1

REV. 2-1-62 1/12/62

WS 133A

ASSEMBLY & CHECKOUT

EQUIPMENT REQUIREMENTS

ACO NUMBER 3059

APPROVAL DATE 11-14-61

REVISION _____ DATE _____

EQUIPMENT TITLE: Stop Watch
(Basic Noun First)

RESPONSIBLE DEPT. BID EQUIP. CLASSIFICATION ACO/MGE-SFC/OH

DESIGN RQMTS DOCUMENT None DWG NO. N.A.

TO BE USED AT:

| BASE | MAFB | EAFB | VAFB | STP III | PLT 77 | | | |
|---|---|---|---|---|---|---|---|---|
| DOC | D2-7648 | D2-7648 | D2-7871 | D2-9942 | D2-11162 | | | |
| | X | X | X | | | | | |

PURPOSE & JUSTIFICATION:

To determine the accuracy of the Running Time Meter on the Auxiliary Environmental Control Unit (Fig. A 4115).
To calibrate and check Recorder, Launch Events (ACO 372) at the CSA.

A general purpose timing tool.

DESCRIPTION, REQUIREMENTS & RECOMMENDATIONS:

The accuracy of the Running Time Meter must be maintained within ± 5% full scale. It is recommended that a Jaquet #300 stop watch capable of measuring one hour, ± 0.1% be provided.

This item is identical to Fig. A 3059.

SHT 1 OF 1

| ENGINEERING DEPT. | BASE INSTALLATION DEPT. | MANUFACTURING DEPT. |
|---|---|---|
| [signature] | [signature] | [signature] |

2-6340-0-1

REV. 2-1-62

NOTE: Use form U3-4071-1000 if additional sheets are required.

ORIGINATING GROUP SUPERVISOR: J. K. Sh[illegible]
TELEPHONE: [illegible]

483

WS 133A
ASSEMBLY & CHECKOUT
EQUIPMENT REQUIREMENTS

ACO. NUMBER 3076
APPROVAL DATE 8-21-61
REVISION A DATE 9-28-61

EQUIPMENT TITLE: Thermometer

RESPONSIBLE DEPT. BID EQUIP. CLASSIFICATION SFC/OH
DESIGN RQMTS DOCUMENT None DWG NO. None
TO BE USED AT:

| BASE | MAFB | EAFB | VAFB | STP III | PLT 77 | | | |
|---|---|---|---|---|---|---|---|---|
| DOC | D2-7648 | D2-7648 | D2-7871 | D2-9942 | D2-11162 | | | |
| | x | x | x | x | x | | | |

R

PURPOSE:

To check coolant water temperature of the cooling unit G&C compartment during testing.

DESCRIPTION:

This is identical to that specified by Figure "A" 3076.

SHT 1 OF 1

| ENGINEERING DEPT. | BASE INSTALLATION DEPT. | MANUFACTURING DEPT. |
|---|---|---|
| H. H. Burton | A. D. Munn 9/28/61 | A. E. Preiser |

Rev. 11-15-61
2-1-62

# WS 133A
# ASSEMBLY & CHECKOUT EQUIPMENT REQUIREMENTS

ACO NUMBER 3119
APPROVAL DATE
REVISION DATE

EQUIPMENT TITLE: Adapter, Spanner
(Basic Noun First)

RESPONSIBLE DEPT.
EQUIP. CLASSIFICATION ACO/MGE Pec.
DESIGN RQMTS DOCUMENT
DWG NO.
TO BE USED AT:

| BASE | MAFB | EAFB | VAFB | STP III | PLT 77 | | | |
|---|---|---|---|---|---|---|---|---|
| DOC | D2-7648 | D2-7648 | D2-7871 | D2-9942 | D2-11162 | | | |
| | X | X | X | | | | | |

PURPOSE & JUSTIFICATION:

To provide the necessary torque to the round, slotted umbilical nut and to prevent damage to the connector locking device when removing or replacing the umbilical cable connector on the G&C Section (Fig. A 6201) during testing in G&C Test Area of CSA or during removal or replacement of G&C Section at the Launch Facility.

DESCRIPTION, REQUIREMENTS & RECOMMENDATIONS:

It is recommended that a Spanner Adapter be provided to perform the above noted requirement. The adapter must be capable of applying 15 foot pounds of torque to the umbilical nut. The adapter will fit the umbilical nut and will have a centrally located ½" square socket that will accept a standard ½" square drive wrench and torque bar.

This item is identical to Fig. A 3119.

NOTE: Use form LO-4071-1000 if additional sheets are required

ORIGINATING GROUP SUPERVISOR: J. K. Sherson
TELEPHONE: At-4-5860

SHT 1 OF 1

| ENGINEERING DEPT. | BASE INSTALLATION DEPT. | MANUFACTURING DEPT. |
|---|---|---|
| [signature] | [signature] | |

2-6340-0-1
REV. 6-1-62

WS 133A

# ASSEMBLY & CHECKOUT EQUIPMENT REQUIREMENTS

ACO NUMBER 4001
APPROVAL DATE 8-1-61
REVISION A DATE 11-2-61

DWG NO.

EQUIPMENT TITLE: MULTIMETER
(Basic Noun First)

RESPONSIBLE DEPT. BID EQUIP. CLASSIFICATION SFC/OH
DESIGN RQMTS DOCUMENT NONE DWG NO. N. A.
TO BE USED AT:

| BASE | MAFB | EAFB | VAFB | STP III | PLT 77 | | | |
|---|---|---|---|---|---|---|---|---|
| DOC | D2-7648 | D2-7648 | D2-7871 | D2-9942 | D2-11162 | | | |
| | X | X | X | X | X | | | |

NOTE: Use form U3-4071-1000 if additional sheets are required.

## PURPOSE & JUSTIFICATION:

A general purpose electrical measurement instrument is required for use in the field and in the shops during assembly and checkout. The instrument is required to trace continuity and perform AC/DC voltage and current and resistance measurements where tolerances and impedance matching are not critical.

## DESCRIPTION, REQUIREMENTS & RECOMMENDATIONS:

The instrument selected should be a hand portable, battery powered and serviceable for continuous shop and field use.

The following models or their equivalents are suggested:

Triplett Model 630A
Simpson Model 260
AN/PSM-6

This item is identical to Figure A 4001.

ORIGINATING GROUP SUPERVISOR: Paul Jones
TELEPHONE: 5-3310

SHT 1 OF 1

| ENGINEERING DEPT. | BASE INSTALLATION DEPT. | MANUFACTURING DEPT. |
|---|---|---|
| | | |

2-6340-0-1
2-1-62
REV. 11-15-61

WS 133A

ASSEMBLY & CHECKOUT

EQUIPMENT REQUIREMENTS

ACO NUMBER 4004

APPROVAL DATE 8-1-61

REVISION A DATE 10-26-61

EQUIPMENT TITLE: Oscilloscope (Basic Noun First)

RESPONSIBLE DEPT. BID EQUIP. CLASSIFICATION SFC/OH

DESIGN RQMTS DOCUMENT None DWG NO. N.A.

TO BE USED AT:

| BASE | MAFB | EAFB | VAFB | STP III | PLT 77 | | | |
|---|---|---|---|---|---|---|---|---|
| DOC | D2-7648 | D2-7648 | D2-7871 | D2-9942 | D2-11162 | | | |
| | X | X | X | | X | | | |

PURPOSE & JUSTIFICATION:

To check the output wave from the adapter C91 Electronic Programming Test Center and Power Supply. To check for transients under no load, fall load and nominal load conditions of the power supply.

See D2-11162, Sec. C, para. C6.1, C8.2, C8.4, and C9.2

To provide a means to observe and measure voltage waveforms in both television camera and monitor. To measure frequency, power supply ripple, and use as a test instrument to display frequency curvers of video amplifiers, when used (see insert below)

DESCRIPTION, REQUIREMENTS & RECOMMENDATIONS:

This is identical to that specified by Fig. A 4004

(insert)

in conjunction with a video sweep generator.

To provide a means to observe audio distortion in HF/UHF Radio System at CSA.

SHT 1 OF 1

| ENGINEERING DEPT. | BASE INSTALLATION DEPT. | MANUFACTURING DEPT. |
|---|---|---|
| [signature] | [signature] | [signature] |

NOTE: Use form U3-4071-1000 if additional sheets are required.

ORIGINATING GROUP SUPERVISOR: L. Berger

TELEPHONE: 5-4281

2-6340-0-1

11-15-61

REV. 2-1-62

WS 133A

# ASSEMBLY & CHECKOUT EQUIPMENT REQUIREMENTS

ACO NUMBER 4047
APPROVAL DATE 1-23-62
REVISION _____ DATE _____

EQUIPMENT TITLE: Wrench, Safing Pin Installation and Removal
(Basic Noun First)

RESPONSIBLE DEPT. Engineering EQUIP. CLASSIFICATION ACO/MGE-Peculiar

DESIGN RQMTS DOCUMENT _____ DWG NO. _____

TO BE USED AT:

| BASE | MAFB | EAFB | VAFB | STP III | PLT 77 | | | |
|---|---|---|---|---|---|---|---|---|
| DOC | D2-7648 | D2-7648 | D2-7871 | D2-9942 | D2-11162 | | | |
| | - | X | X | | X | | | |

PURPOSE & JUSTIFICATION:

A means to provide a tool for installing safing pins in all safe and arm devices to assure that the missile cannot be inadvertently armed and will remain in a safe condition during ordnance devices functional test in the MAB.

DESCRIPTION, REQUIREMENTS & RECOMMENDATIONS:

The wrench will consist of a one-half inch diameter aluminum tube mounted in a pistol grip type stock. The other end will contain a one quarter inch square for inserting into the safing pin or into an extension of the same material and diameter as the tube. The tube extension will have a retainer for locking the [illegible] extension of the wrench. The S&A pin will be removable from the wrench or extension by a straight axial pull, a trigger mechanism will be operated in the pistol grip to release the extension from the basic wrench. A light source will be provided as an integral part of the wrench, to illuminate the S&A indicator. The wrench, including the extension, excepting the light and driver will be coated with an insulating material to prevent static arcing.

This item is identical to Fig. A 4047.

SHT 1 OF 1

| ENGINEERING DEPT. | BASE INSTALLATION DEPT. | MANUFACTURING DEPT. |
|---|---|---|
| [illegible] | [illegible] | [illegible] |

NOTE: Use form LB-4071-1000 if additional sheets are required.

ORIGINATING GROUP SUPERVISOR: J. Roquet
TELEPHONE: 5-4797

2-6340-0-1
6-1-62
REV.

WS 133A

ASSEMBLY & CHECKOUT EQUIPMENT REQUIREMENTS

ACO NUMBER 4127
APPROVAL DATE 11-2-61
REVISION _____ DATE _____

EQUIPMENT TITLE: POWER SUPPLY
(Basic Noun First)

RESPONSIBLE DEPT. BID EQUIP. CLASSIFICATION SFC/OH
DESIGN RQMTS DOCUMENT NONE DWG NO. N.A.
TO BE USED AT:

| BASE | MAFB | EAFB | VAFB | STP III | PLT 77 | | | |
|---|---|---|---|---|---|---|---|---|
| DOC | D2-7648 | D2-7648 | D2-7871 | D2-9942 | D2-11162 | | | |
| | X | X | X | | X | | | |

NOTE: Use form U3-4071-1000 if additional sheets are required.

PURPOSE & JUSTIFICATION:

A requirement exists at the CSA and at Plant 77 for a general purpose precision power supply which can be used as comparison for checking out power supply drawers or can be used to provide precision power during Functional Testing of disconnected components. A capability is needed in the range -35 to +35 VDC with a current capacity of 15 amperes and 18 millivolt regulation such as the following Figure A items, require this power supply during Functional Testing: 599,604,1201,1213,1228,1243,1289,1296,3013,3092,3109,4490,7721,7723.

DESCRIPTION, REQUIREMENTS & RECOMMENDATIONS:

It is recommended that a Dressen Barnes Model 62-121 or equivalent be provided.

Polarity Reversible
0.5 to 36 VDC
0-15 AMP
Reg 18 MV

This item is identical to Fig. A 4127.

ORIGINATING GROUP SUPERVISOR: Paul Long
TELEPHONE: 5-3310

SHT 1 OF 1

| ENGINEERING DEPT. | BASE INSTALLATION DEPT. | MANUFACTURING DEPT. |
|---|---|---|
| | | |

2-6340-0-1

REV. 2-1-62
11-15-61

WS 133A

ASSEMBLY & CHECKOUT

EQUIPMENT REQUIREMENTS

ACO NUMBER 4172

APPROVAL DATE 8/1/61

REVISION _____ DATE _____

EQUIPMENT TITLE: Oscilloscope, Plug-In Unit

RESPONSIBLE DEPT. BID

EQUIP. CLASSIFICATION SEC/OH

DESIGN RQMTS DOCUMENT _____

DWG NO. None

TO BE USED AT:

| BASE | MAFB | EAFB | VAFB | STP III | PLT 77 | | | |
|---|---|---|---|---|---|---|---|---|
| DOC | D2-7648 | D2-7648 | D2-7871 | D2-9942 | D2-11162 | | | |
| | | | | | X | | | |

PURPOSE: To be used in conjunction with the oscilloscope for checking the output waveform of the Adapter C91 Electronic Programming Test Center and Power Supply. To check for transients under no load, full load, and nominal load conditions of the power supply. See D2-11162 Section C, Paragraphs C6.1, C8.2, C8.4, and C9.2.

To provide a means for displaying voltage waveforms simultaneously on an oscilloscope for purposes of testing, calibrating, aligning and trouble shooting the Closed Circuit Television System.

DESCRIPTION:

This is identical to that specified by Fig. "A" 4172.

SHT 1 OF 1

| ENGINEERING DEPT. | BASE INSTALLATION DEPT. | MANUFACTURING DEPT. |
|---|---|---|
| C. K. [illegible] | R E Colling | [illegible] |

11-15-61
2-1-62

WS 133A

# ASSEMBLY & CHECKOUT EQUIPMENT REQUIREMENTS

ACO NUMBER 4175
APPROVAL DATE 1-23-62
REVISION _____ DATE _____

EQUIPMENT TITLE: Jack Set - Translating
(Basic Noun First)

RESPONSIBLE DEPT. Engineering EQUIP. CLASSIFICATION ACO/MGF-Peculiar

DESIGN RQMTS DOCUMENT _____ DWG NO. _____

TO BE USED AT:

| BASE | MAFB | EAFB | VAFB | STP III | PLT 77 | | | |
|---|---|---|---|---|---|---|---|---|
| DOC | D2-7648 | D2-7648 | D2-7871 | D2-9942 | D2-11162 | | | |
| | X | X | X | X | X | | | |

PURPOSE & JUSTIFICATION:

A means to provide accurate alignment, levelling, stablizing and supporting the Ballistic Missile Trailer and/or the Transporter Erector during the transfer operation of a missile or SSCBM without damaging the missile or SSCBM in the maintenance support area, Missile and Engine Storage Area and MAB.

DESCRIPTION, REQUIREMENTS & RECOMMENDATIONS:

The translating jack will consist of a jack (standard GFP item) with a translating pad (peculiar item). The translating jack will be capable of a vertical movement of 9 inches, lateral and forward and aft alignment movement of 6 inches, positive locking devices to maintain the desired settings. The translating pad will be approximately 36 inches square and 12 inches deep and will be castor mounted on four corners.

This item is identical to Fig. A 4175

SHT. 1 OF 1

ORIGINATING GROUP SUPERVISOR: J. Rocket
TELEPHONE: 5-1797

| ENGINEERING DEPT. | BASE INSTALLATION DEPT. | MANUFACTURING DEPT. |
|---|---|---|
| [illegible] | [illegible] | [illegible] |

2-6340-0-1
REV. 6-1-62

BOEING NO. D2-11162
APP. II PAGE 43a

obt

WS 133A
ASSEMBLY & CHECKOUT
EQUIPMENT REQUIREMENTS

ACO NUMBER 4190
APPROVAL DATE 9-12-61
REVISION _____ DATE _____

EQUIPMENT TITLE: METER, INSTALLATION FLOW RATE INDICATING

RESPONSIBLE DEPT. Base Installation Dept. EQUIP. CLASSIFICATION SFC/OH
DESIGN RQMTS DOCUMENT NONE DWG NO. NONE
TO BE USED AT:

| BASE | MAFB | EAFB | VAFB | STP III | PLT 77 | | | |
|---|---|---|---|---|---|---|---|---|
| DOC | D2-7648 | D2-7648 | D2-7871 | D2-9942 | D2-11162 | | | |
| | X | X | X | X | X | | | |

PURPOSE:

To determine if the cooling water flow into the G&C compartment is within design specifications.
This item to be used in conjunction with ACO-200 at the Launch Facility.

DESCRIPTION:

A float type, flow rate indicating meter with quick disconnect inlet and outlet fittings capable of reading water flow rates accurately from one to ten pounds per minute.

Both the hose and fittings as well as the meter can be obtained commercially since the plumbing for the cooling unit is of a standard size.

This item is identical to Figure A 4190.

SHT 1 OF 1

| ENGINEERING DEPT. | BASE INSTALLATION DEPT. | MANUFACTURING DEPT. |
|---|---|---|
| H. H. Barton | [signature] 9/12/61 | [signature] |

2-6340-0-1
11-15-61
2-1-62

WS 133A

# ASSEMBLY & CHECKOUT EQUIPMENT REQUIREMENTS

ACO NUMBER 4381
APPROVAL DATE 8-1-61
REVISION A DATE 11-7-61

EQUIPMENT TITLE: Ohmmeter
(Basic Noun First)

RESPONSIBLE DEPT. BID EQUIP. CLASSIFICATION SFC/OH
DESIGN RQMTS DOCUMENT None DWG NO. N.A.
TO BE USED AT:

| BASE | MAFB | EAFB | VAFB | STP III | PLT 77 | | | |
|---|---|---|---|---|---|---|---|---|
| DOC | D2-7648 | D2-7648 | D2-7871 | D2-9942 | D2-11162 | | | |
| | X | X | X | X | X | | | |

PURPOSE & JUSTIFICATION:

A requirement exists for an instrument to measure electrical bond resistance during assembly and checkout of Minuteman ground equipment.
Refer to Boeing Procedure 5117 for Electrical Bonding Procedure for all Minuteman items.

DESCRIPTION, REQUIREMENTS & RECOMMENDATIONS:

This is identical to that specified by Fig. A 4381.

It is recommended that an AVTRON T-207, Type W Bonding Meter be used. Refer to Boeing Procedure 5117 for equivalent item and limitations.

SHT 1 OF 1

| ENGINEERING DEPT. | BASE INSTALLATION DEPT. | MANUFACTURING DEPT. |
|---|---|---|
| [signature] | [signature] | [signature] |

NOTE: Use form U3-4071-1000 if additional sheets are required.

ORIGINATING GROUP SUPERVISOR: F. J. Searsy
TELEPHONE: AT 4-5360

2-6340-0-1

REV. 6-1-62

WS 133A

# ASSEMBLY & CHECKOUT EQUIPMENT REQUIREMENTS

ACO NUMBER 4425

APPROVAL DATE

REVISION DATE

EQUIPMENT TITLE: Flood Light, Electric
(Basic Noun First)

RESPONSIBLE DEPT. EQUIP. CLASSIFICATION

DESIGN RQMTS DOCUMENT DWG NO.

TO BE USED AT:

| BASE | MAFB | EAFB | VAFB | STP 111 | PLT 77 | | | |
|---|---|---|---|---|---|---|---|---|
| DOC | D2-7648 | D2-7648 | D2-7871 | D2-9942 | D2-11162 | | | |
| | X | X | X | | X | | | |

PURPOSE & JUSTIFICATION:

There is a need for a general area illumination while repairing faults in the SCN cable system. This means of illumination must be operable from 115 V. 60 cycle, single phase power and must be suitable for use in a non-controlled environment, i.e., wind, snow, rain, dust, etc. Positioning of the lighting to cover the general work area is necessary.

DESCRIPTION, REQUIREMENTS & RECOMMENDATIONS:

Four (4) portable lights, of 150 watts each and equipped with adjustable stands is recommended to be provided to satisfy the above requirements. The lights must withstand rough transportation handling and inclement weather. Each light will include an extension cord approximately 15 feet long.

This item is identical to Fig. A 4425.

NOTE: Use form L3-4071-1000 if additional sheets are required.

ORIGINATING GROUP SUPERVISOR:

TELEPHONE:

SHT 1 OF 1

| ENGINEERING DEPT. | BASE INSTALLATION DEPT. | MANUFACTURING DEPT. |
|---|---|---|
| | | |

2-6340-0-1

REV. 6-1-62

WS 133A

# ASSEMBLY & CHECKOUT EQUIPMENT REQUIREMENTS

ACO NUMBER 4448

APPROVAL DATE 4-3-62

REVISION _____ DATE _____

EQUIPMENT TITLE EXTENSION, MISSILE BASE ADAPTER RING
(Basic Noun First)

RESPONSIBLE DEPT. Engineering EQUIP. CLASSIFICATION ACO/AGE-Peculiar

DESIGN REQMTS DOCUMENT _____ DWG NO. NONE

TO BE USED AT:

| BASE | MAFB | EAFB | VAFB | STP III | PLT 77 | | | |
|---|---|---|---|---|---|---|---|---|
| DOC | D2-7648 | D2-7648 | D2-7871 | D2-9942 | D2-11162 | | | |
| | X | X | X | | N/A | | | |

NOTE: Use form U3-4271 if additional sheets are required

PURPOSE & JUSTIFICATION

A requirement exists to provide a fixture on the base adapter ring on the missile to provide a means of moving the missile between the SSCBM and the TE.

1. Reach to a point approximately 6 feet aft of base adapter ring.
2. Reach a point 2 inches lower than the bottom of the base adapter ring on the vertical centerline of the missile.
3. Mount solidly to the base adapter ring to resist a 5,000 lb load applied longitudinally to the missile.
4. Be capable of attaching the Ballistic Missile trailer winching cable.

DESCRIPTION, REQUIREMENTS & RECOMMENDATIONS:

It is recommended that a light weight, tubular framed, tripod type extension with the features called out in D2-6951 be utilized with the following features:

1. Consist of two A-Frame members, one section to be secured to the hoisting fittings located in the upper half of the base adapter ring and the lower section attached to the hoisting fittings located in the lower half of the base adapter.
2. Shall be assembled and installed by means of quick detach type pins.
3. Provide for a pull of 5,000 lbs in either direction, oriented longitudinally with the center line of the missile.

This item is identical to Fig. A 4448.

ORIGINATING GROUP SUPERVISOR: _____ TELEPHONE: _____

SHT 1 OF 1

| ENGINEERING DEPT. | BASE INSTALLATION DEPT. | MANUFACTURING DEPT. | FACILITIES DEPT. |
|---|---|---|---|
| | | | |

2-6340-0-1 6-1-62
REV.

# WS 133A

# ASSEMBLY & CHECKOUT EQUIPMENT REQUIREMENTS

ACO NUMBER 4461

APPROVAL DATE 2-13-62

REVISION A DATE 2-23-62

EQUIPMENT TITLE Ammeter, AC/DC
(Basic Noun First)

RESPONSIBLE DEPT. BI-MM EQUIP. CLASSIFICATION ACO/MGE/SFC/OH

DESIGN REQMTS DOCUMENT None DWG NO.

TO BE USED AT:

| BASE | MAFB | EAFB | VAFB | STP III | PLT 77 | | | |
|---|---|---|---|---|---|---|---|---|
| DOC | D2-7648 | D2-7648 | D2-7871 | D2-9942 | D2-11162 | | | |
| | X | X | X | X | X | | | |

NOTE: Use form U3-4071-1020 if additional sheets are required

PURPOSE & JUSTIFICATION

This item is required for pre-assembly and periodic testing of Figure A items 623, 1201, 4018, 4115, and 1214, and 9278.

DESCRIPTION, REQUIREMENTS & RECOMMENDATIONS:

An AC/DC ammeter having a dual range capability of measuring up to 20 AMPS AC and DC. A Weston Model 370 (Cat. Number 370-2903004) with ranges of 0-10 and 0-20 Amps AC and DC ± 0.25% (one quarter of one percent) or equivalent will satisfy this requirement.

This item is intended to be equivalent to, and functionally interchangeable with Figure A (MCRN) 4461 including those physical dimensions and features necessary for proper functioning and use.

1-26-62: A change request has been submitted to revise Figure A 4461 to show the same recommended equipment as noted above.

ORIGINATING GROUP SUPERVISOR: T. Muir
TELEPHONE: 5-3310

SHT 1 OF 1

| ENGINEERING DEPT. | BASE INSTALLATION DEPT. | MANUFACTURING DEPT. | FACILITIES DEPT. |
|---|---|---|---|
| | | | |

2-6340-0-1 6-1-62
REV.

WS 133A

# ASSEMBLY & CHECKOUT EQUIPMENT REQUIREMENTS

ACO NUMBER 4524
APPROVAL DATE
REVISION DATE

EQUIPMENT TITLE: Wrench, Portable, Electric
(Build Noun First)

RESPONSIBLE DEPT. BI-MM EQUIP. CLASSIFICATION SFC/OH

DESIGN RQMTS DOCUMENT None DWG NO. None

TO BE USED AT:

| BASE | MAFB | EAFB | VAFB | STP III | PLT 77 | | | |
|---|---|---|---|---|---|---|---|---|
| DOC | D2-7648 | D2-7648 | D2-7071 | D2-9942 | D2-11162 | | | |
| | | | | | X | | | |

PURPOSE & JUSTIFICATION:
A device is required which is capable of applying 600 ft-lb torque for rotating the actuator of the fifth wheel support to the extended and retracted positions on the T-E/SSCBM railcar.

DESCRIPTION, REQUIREMENTS & RECOMMENDATIONS:
It is recommended that a powered, non-impact, portable rotary tool be utilized similar to commercially available Thor EN-PB-75 Model 8770 115 V single phase which utilizes an adjustable overload clutch. The device should be light weight for ease of handling and be equipped with a 50 ft. flexible cord which meets industrial standards.

To satisfy greater torque capability than normal, the unit must include the following:

1. Gear Head Model TD-1000 (X-4 Corp.) FSN 5120-574-9318
2. Adapter-5854 (Proto Tools) FSN 5120-227-8103

ORIGINATING GROUP SUPERVISOR: O. A. Severide
TELEPHONE: 5-5072

SHT 1 OF 1

| ENGINEERING DEPT. | BASE INSTALLATION DEPT. | MANUFACTURING DEPT. |
|---|---|---|
| | | |

2-6340-0-1
REV. 6-1-62

WS 133A

# ASSEMBLY & CHECKOUT EQUIPMENT REQUIREMENTS

ACO NUMBER 4525

APPROVAL DATE

REVISION DATE

EQUIPMENT TITLE: Stop, Railcar Wheel
(Basic Noun First)

RESPONSIBLE DEPT. BI-MM EQUIP. CLASSIFICATION SEC/OH

DESIGN RQMTS DOCUMENT None DWG NO. None

TO BE USED AT:

| BASE | MAFB | EAFB | VAFB | STP III | PLT 77 | | | |
|---|---|---|---|---|---|---|---|---|
| DOC | D2-7648 | D2-7648 | D2-7871 | D2-9942 | D2-11162 | | | |
| | | | | | X | | | |

PURPOSE & JUSTIFICATION:
A requirement exists for a wheel stop to prevent the railcar from rolling, once positioned. This device must be readily visable and easily disengaged by operating personnel.

NOTE: Use Form L3-4671-1000 if additional space is required

DESCRIPTION, REQUIREMENTS & RECOMMENDATIONS:

It is recommended that a device similiar to a type six, Hinged type Wheel Stop, Part number 20177 as manufactured by C. M. Lovsted and Co. or approved equal be used.

ORIGINATING GROUP SUPERVISOR: O. A. Severide
TELEPHONE: 5-5022

SHT 1 OF 1

| ENGINEERING DEPT. | BASE INSTALLATION DEPT. | MANUFACTURING DEPT. |
|---|---|---|
| | | |

2-6340-0-1
REV. 6-1-62

1-66

# WS 133A
# ASSEMBLY & CHECKOUT EQUIPMENT REQUIREMENTS

ACO NUMBER 4535
APPROVAL DATE 1-23-62
REVISION _____ DATE _____

EQUIPMENT TITLE: Alignment Set, Missile Transfer
(Basic Noun First)

RESPONSIBLE DEPT. BI-MM
EQUIP. CLASSIFICATION ACO MGE - Peculiar
DESIGN RQMTS DOCUMENT None
DWG NO. 25-27486
TO BE USED AT:

| BASE | MAFB | EAFB | VAFB | STP III | PLT 77 | | | |
|---|---|---|---|---|---|---|---|---|
| DOC | D2-7648 | D2-7648 | D2-7871 | D2-9942 | D2-11162 | | | |
| | X | X | X | X | X | | | |

PURPOSE & JUSTIFICATION:

A requirement exists for aligning the rails of the SSCBM, the Transporter Erector and/or fixed rails to assure that the rails are in the same horizontal and vertical plane during roll transfer of the missile from each vehicle to fixed rails.

DESCRIPTION, REQUIREMENTS & RECOMMENDATIONS:

It is recommended that targets and an alignment scope plus other devices be provided to accomplish the aligning tasks. Mounting brackets and attachments are required to mount the targets and scope to the vehicles. The following equipment or equivalent is recommended to be used in the set.

(1) Alignment Telescope, Model 381-S (1 required)*
(2) Alignment Target, Model 395-60 (3 required)*
(3) Telescope Mount, Model 381-S-1 (1 required)*
(4) Light, Model 515B (1 required)*
(5) Brackets to support (1) through (4) above
(6) A device, such as a spirit level, to establish rail alignment in the roll mode.
(7) Suitable container(s) for all alignment equipment.

This item is identical to Figure A 4535 and replaces SFA 7779 and ACO 381.

*Brunson Instrument Co.

SHT 1 OF 1

| ENGINEERING DEPT. | BASE INSTALLATION DEPT. | MANUFACTURING DEPT. |
|---|---|---|
| [signature] | [signature] | [signature] |

ORIGINATING GROUP SUPERVISOR: O. A. Severide
TELEPHONE: 5-4797

NOTE: Use form LO-4071-1000 if additional sheets are required.

2-6340-0-1 6-1-62
REV.

WS 133A

# ASSEMBLY & CHECKOUT EQUIPMENT REQUIREMENTS

ACO NUMBER 9278
APPROVAL DATE 11-1-61
REVISION _____ DATE _____

EQUIPMENT TITLE: G&C Ground Cooling System Compartment
(Basic Noun First)

RESPONSIBLE DEPT. Engineering EQUIP. CLASSIFICATION ACO/MGE-peculiar
DESIGN RQMTS DOCUMENT None DWG NO. N.A.
TO BE USED /

| BASE | MAFB | EAFB | VAFB | STP III | PLT 77 | | | |
|---|---|---|---|---|---|---|---|---|
| DOC | D2-7648 | D2-7648 | D2-7871 | D2-9942 | D2-11162 | | | |
| | X | X | X | | X | | | |

NOTE: Use form U3-4071-1000 if additional sheets are required.

PURPOSE & JUSTIFICATION:

A requirement exists for a means of cooling the Guidance and Control section during functional test at the CSA, CPA and MAB.

DESCRIPTION, REQUIREMENTS & RECOMMENDATIONS:

A Cooling Unit which will consist of a chiller, electronic controls, a tank, pump, flow control valves, and temperature sensor identical to Fig. A 9278 be provided.

ORIGINATING GROUP SUPERVISOR: Paul Lon
TELEPHONE: 5-3310

SHT 1 OF 1

| ENGINEERING DEPT. | BASE INSTALLATION DEPT. | MANUFACTURING DEPT. |
|---|---|---|
| | | |

2-6340-0-1

REV. 6-1-62

WS 133A

# ASSEMBLY & CHECKOUT EQUIPMENT REQUIREMENTS

ACO NUMBER ACO-10701
APPROVAL DATE 11-16-61
REVISION _____ DATE _____

EQUIPMENT TITLE: RECORDER
(Basic Known First)

RESPONSIBLE DEPT. BID
EQUIP. CLASSIFICATION ACO/MGE-SFC/OH

DESIGN RQMTS DOCUMENT None
DWG NO. N.A.

TO BE USED AT:

| BASE | MAFB | EAFB | VAFB | STP III | PLT 77 | | | |
|---|---|---|---|---|---|---|---|---|
| DOC | D2-7648 | D2-7648 | D2-7871 | D2-9942 | D2-11162 | | | |
| | X | X | X | | X | | | |

PURPOSE & JUSTIFICATION:

This item is required to record input voltage and duration of pulse in testing of Fig. A 599 Load Simulator and to record output voltage and duration in testing of Fig. A 667, Portable DC Power Supply, C-95 used in checkout of C90/C91. The recorder must have a chart speed of at least 125 MM/SEC. Pulse amplitude, shape and duration are measured and recorded by the recorder. Pulse on Fig. A #667 is +39.5 to 45.5 VDC measured for 2 Sec +.5 -0 Sec. Pulse on Fig. A #599 is +28 VDC ± 1 VDC measured for 2 Sec +.5-0 Sec.

DESCRIPTION, REQUIREMENTS & RECOMMENDATIONS:

This item is identical to Figure A item 10701, which recommends a Brush Model RD-2321-00.

NOTE: Use form 10-4071-1000 if additional sheets are required

ORIGINATING GROUP SUPERVISOR: Paul Lonk
TELEPHONE: 5-2310

SHT 1 OF 1

| ENGINEERING DEPT. | BASE INSTALLATION DEPT. | MANUFACTURING DEPT. |
|---|---|---|
| [signature] | [signature] | [signature] |

2-6340-0-1

REV. 6-1-62 1/12/62

WS 133A

# ASSEMBLY & CHECKOUT EQUIPMENT REQUIREMENTS

ACO NUMBER 10,715

APPROVAL DATE 5-15-62

REVISION _____ DATE _____

EQUIPMENT TITLE Functional Test and Fault Isolation Kit for C89
(Basic Noun First)
Test Adapter Group

RESPONSIBLE DEPT. BI-MM EQUIP. CLASSIFICATION ACO/MGE-Peculiar

DESIGN REQMTS DOCUMENT _____ DWG NO. _____

TO BE USED AT:

| BASE | MAFB | EAFB | VAFB | STP III | PLT 77 | | | |
|---|---|---|---|---|---|---|---|---|
| DOC | D2-7648 | D2-7648 | D2-7871 | D2-9942 | D2-11162 | | | |
| | X | None | X | | X | | | |

NOTE: Use form U3-4671-1000 if additional sheets are required

PURPOSE & JUSTIFICATION

A requirement exists in the CSA and Maintenance Support Area for controlled tape programs for the C91 Fault Locator Programming Test Center (Figure A 624) to perform tests on the drawers of the C89, G&C System Test Adapter (Figure A 622).

DESCRIPTION, REQUIREMENTS & RECOMMENDATIONS:

It is recommended that special-purpose tape and patchboard sets be provided for this purpose.

1. The tapes shall be pre-programmed opaque mylar 1 ± .003 inch wide, .0026 inch thick. All data holes shall be .072 ±.003 inch in diameter and all timing holes. .046 ± .003 inch in diameter. These tapes must be compatible with the tape reader in the C91, Test Center. Data holes shall contain the required intelligence to adequately control the simulation of each drawer input and the evaluation of the drawer response.

2. The patchboards shall be made of a metal frame, a fibre board, patchcords. A metal cover with a storage case for the tape will be provided as part of the patchboard. Each patchboard shall have a keying arrangement to prevent erroneous installation. The patchboard shall provide a means of routing the simulated input signals and responses to the drawer under test.

NOTE: This item is identical to Figure A 10,715.

ORIGINATING GROUP SUPERVISOR: G. Barrett

TELEPHONE: 5-4252

SHT ___ OF ___

| ENGINEERING DEPT. | BASE INSTALLATION DEPT. | MANUFACTURING DEPT. | FACILITIES DEPT. |
|---|---|---|---|
| | | | |

2-6340-0-1 6-1-62

REV.

# WS 133A

# ASSEMBLY & CHECKOUT EQUIPMENT REQUIREMENTS

ACO NUMBER 10,716

APPROVAL DATE 5-15-62

REVISION _____ DATE _____

EQUIPMENT TITLE Functional Test & Fault Isolation Kit for C90 Test Adapter Group
(Basic Noun First)

RESPONSIBLE DEPT. BI-MM EQUIP. CLASSIFICATION ACO/MGE-Peculiar

DESIGN REQMTS DOCUMENT _____ DWG NO. _____

TO BE USED AT:

| BASE | MAFB | EAFB | VAFB | STP III | PLT 77 | | | |
|---|---|---|---|---|---|---|---|---|
| DOC | D2-7648 | D2-7648 | D2-7871 | D2-9942 | D2-11162 | | | |
| | X | X | X | | X | | | |

PURPOSE & JUSTIFICATION

A requirement exists in the CSA and Maintenance Support Area for controlled tape programs for the C91 Fault Locator Programming Test Center (Figure A 624) to perform tests on the drawers of the C90 Test Adapter Group (Figure A 623).

DESCRIPTION, REQUIREMENTS & RECOMMENDATIONS:

It is recommended that special-purpose tape and patchboard sets be provided for this purpose.

1. The tapes shall be pre-programmed opaque mylar 1 ± .003 inch wide, .0026 inch thick. All data holes shall be .072 ± .003 inch in diameter and all timing holes .046 ± .003 inch in diameter. These tapes must be compatible with the tape reader in the C91, Test Center. Data holes shall contain the required intelligence to adequately control the simulation of each drawer input and the evaluation of the drawer response.

2. The patchboards shall be made of a metal frame, a fibre board, patchcords. A metal cover with a storage case for the tape will be provided as part of the patchboard. Each patchboard shall have a keying arrangement to prevent erroneous installation. The patchboard shall provide a means of routing the simulated input signals and responses to the drawer under test.

NOTE: This item is identical to Figure A 10,716.

SHT ____ OF ____

| ENGINEERING DEPT. | BASE INSTALLATION DEPT. | MANUFACTURING DEPT. | FACILITIES DEPT. |
|---|---|---|---|
| | | | |

NOTE: Use form U3-4771-1000 if additional sheets are required

ORIGINATING GROUP SUPERVISOR G. Parrott TELEPHONE: 5-4252

2-6340-0-1 6-1-62
REV.

WS 133A

# ASSEMBLY & CHECKOUT EQUIPMENT REQUIREMENTS

ACO NUMBER 10,717

APPROVAL DATE 5-15-62

REVISION _____ DATE _____

EQUIPMENT TITLE Functional Test & Fault Isolation Kit for C91

(Basic Noun First) Programming Test Set

RESPONSIBLE DEPT. BI-MM EQUIP. CLASSIFICATION ACO/MGE-Peculiar

DESIGN REQMTS DOCUMENT _____ DWG NO. _____

TO BE USED AT:

| BASE | MAFB | EAFB | VAFB | STP III | PLT 77 | | | |
|---|---|---|---|---|---|---|---|---|
| DOC | D2-7648 | D2-7648 | D2-7871 | D2-9942 | D2-11162 | | | |
| | X | X | X | | X | | | |

NOTE: Use form U3-071-1000 if additional sheets are required

PURPOSE & JUSTIFICATION

A requirement exists in the CSA and Maintenance Support Area for controlled tape programs for the C91 Fault Locator Programming Test Center (Figure A 624) to perform tests in the drawers of another C91, Fault Locator, Programming Test Center (Figure A 624).

DESCRIPTION, REQUIREMENTS & RECOMMENDATIONS:

It is recommended that special-purpose tape and patchboard sets be provided for this purpose.

1. The tapes shall be pre-programmed opaque mylar 1 ± .003 inch wide, .0026 inch thick. All data holes shall be .072 ± .003 inch in diameter and all timing holes .046 ± .003 inch in diameter. These tapes must be compatible with [illegible] tape reader in the C91, Test Center. Data holes shall contain the [illegible] intelligence to adequately control the simulation of each drawer input and the evaluation of the drawer response.

2. The patchboards shall be made of a metal frame, a fibre board, patchcords. A metal cover with a storage case for the tape will be provided as part of the patchboard. Each patchboard shall have a keying arrangement to prevent erroneous installation. The patchboard shall provide a means of routing the simulated input signals and responses to the drawer under test.

NOTE: This item is identical to Figure A 10,717.

ORIGINATING GROUP SUPERVISOR: G. Parr

TELEPHONE: 5--252

SHT ____ OF ____

| ENGINEERING DEPT. | BASE INSTALLATION DEPT. | MANUFACTURING DEPT. | FACILITIES DEPT. |
|---|---|---|---|
| | | | |

2-6340-0-1 6-1-62

REV.

BOEING AIRPLANE COMPANY

NUMBER D2-11162 MODEL NO. WS-133A

TITLE FACTORY SUPPORT EQUIPMENT AND AIRBORNE COMPONENT MAINTENANCE ANALYSIS

PREPARED BY Plant 77 Requirements Unit

SUPERVISED BY [signature] 9/5/61

APPROVED BY [signature] 9/12/61

Approved by [signature] (DATE) 9-11-61

5-78200-5120-68145

CHARGE NUMBER

REVISED 11-15-61
8-31-61

SECTION TITLE PAGE

VOL. | NO. D2-11162

SEC. APP.III | PAGE 1

BAC 4131 B

2-7000

# ACTIVE-CHANGED PAGE

| ACTIVE | | | CHANGED | | | | | ACTIVE | | | CHANGED | | | | |
|---|---|---|---|---|---|---|---|---|---|---|---|---|---|---|---|
| SECTION | PAGE | DATE | SECTION | PAGE REVISED | PAGE ADDED | PAGE DELETED | DATE | SECTION | PAGE | DATE | SECTION | PAGE REVISED | PAGE ADDED | PAGE DELETED | DATE |
| APP III | 1 | 11-15-61 | APP III | COMPLETE | | | 11-15-61 | | | | | | | | |
| ↕ | 2 | 11-15-61 | ↕ | REVISION | | | ↕ | | | | | | | | |
| APP III | 3 | 11-15-61 | | | | 4 | | | | | | | | | |
| | | | APP III | | | 80 | 11-15-61 | | | | | | | | |

## APPENDIX III

### FACTORY SUPPORT EQUIPMENT AND AIRBORNE COMPONENT MAINTENANCE ANSLYSIS

endix presented an initial effort at maintenance analysis of the l FSE items and airborne end items deliverable at A/F Plant 77. ormation has been deleted from this section and may now be found following document:

-10885-3, Maintenance Analysis and Description - Depot Level Reparables- WS-133 and Weapons System - H&D.

# ACTIVE-CHANGED PAGE

| ACTIVE | | | CHANGED | | | | | ACTIVE | | | CHANGED | | | | |
|---|---|---|---|---|---|---|---|---|---|---|---|---|---|---|---|
| SECTION | PAGE | DATE | SECTION | PAGE REVISED | PAGE ADDED | PAGE DELETED | DATE | SECTION | PAGE | DATE | SECTION | PAGE REVISED | PAGE ADDED | PAGE DELETED | DATE |
| | A | 6-1-62 | — | B | B.1 | | 10-22-62 | | | | | B.1 | | | 6-14-63 |
| | B | 10-22-62 | | C | C.1 | | | | | | | C4 | | | |
| | B.1 | 6-14-63 | | | D | | | | | | B | SEE ACTIVE | | | |
| | C | 10-22-62 | B | SEE ACTIVE | | | | | | | D | CHANGE | | | |
| | C.1 | 10-22-62 | C | | | | | | | | E | PAGE | | | |
| | C.2 | 11-26-62 | D | CHANGE | | | | | | | APP I | OF EACH | | | |
| | C.3 | 1-11-63 | E | PAGES OF | | | | | | | APP II | SECTION | | | |
| | C.4 | 6-14-63 | APP I | EACH | | | | | | | | | | | |
| | D | 10-22-62 | | SECTION | | | | | | | | | | | |
| A | 1 THRU 12 | 11-16-63 | | | | | 10-22-62 | | | | | | | | 6-14-63 |
| B | 1 THRU 121 | 6-14-63 | | B.1 | C2 | | 11-26-62 | | | | | | | | |
| | | | | | C.3 | | | | | | | | | | |
| | | | A | SEE ACTIVE | | | | | | | | | | | |
| C | 1 THRU 54 | 4-15-63 | B | | | | | | | | | | | | |
| | | | D | CHANGE PAGES | | | | | | | | | | | |
| D | 1 THRU 53 | 6-14-63 | E | | | | | | | | | | | | |
| | | | APP I | OF EACH | | | | | | | | | | | |
| | | | | SECTION | | | 11-26-62 | | | | | | | | |
| E | 1 THRU 59 | 6-14-63 | | | | | | | | | | | | | |
| | | | | C.3 | | | 1-11-63 | | | | | | | | |
| APP. I | 1 THRU 123 | 6-14-63 | A | SEE ACTIVE | | | | | | | | | | | |
| | | 10-22-62 | B | CHANGE | | | | | | | | | | | |
| | | | C | PAGES | | | | | | | | | | | |
| APP. II | 1 THRU 53 | 6-14-63 | D | OF EACH | | | | | | | | | | | |
| | | | E | | | | | | | | | | | | |
| | | | APP I | | | | | | | | | | | | |
| | | | APP II | SECTION | | | 1-11-63 | | | | | | | | |
| | | | | B.1 | C.4 | | 4-15-63 | | | | | | | | |
| | | | B | SEE ACTIVE | | | | | | | | | | | |
| | | | C | CHANGE PAGE | | | | | | | | | | | |
| | | | D | OF EACH | | | | | | | | | | | |
| | | | APP I | SECTION | | | | | | | | | | | |
| | | | | | | | 4-15-63 | | | | | | | | |
| | | | B | C1 | | | | | | | | | | | |
| | | | D | C4 | | | | | | | | | | | |
| | | | E | | | | | | | | | | | | |
| | | | APP | | | | | | | | | | | | |

FROM: MS 45-60 TO: Antin DEPT. MS: #574

REVISED 6-14-63

U3 4288 1000 (WAS BAC 4131 C)

BOEING VOL. — NO. D2-11162

SEC. — PAGE B.1

## REVISIONS

| SECT | DESCRIPTION | PAGE | REASON |
|---|---|---|---|
| C | Revised identification for ACO 480 to ACO 4368. | 23,43, 52 | Document Updating |
| D | Revised drawing number callout. | 14,37 | |
| | The following pages were revised to agree with the text of Section C. | 17,17b, 35 | |
| D | Referenced document number in lieu of drawing number | 16,33 | |
| APP. I | The following pages were revised to update MRCN's. 53d, 53d-1, 53d-2, 53d-3, 53d-4, 53d-5, 53d-6, 70 4-15-63 | | Document Updating |
| B | Revised rocket motor storage callout | 8,28 | Document Updating |
| | Revised missile containment callout | 32,63 | |
| | Deleted transfer of motors in train | 42,43, 44 | |
| | Deleted reference to MRCN 7746 | 50,55, 59 | Document Updating |
| | Added ACO 4662 (Lead Electrical Assy) (Missile Bonding Test) | 62 | ECP 620 |
| | Added the requirement for MRCN 7794 | 64,71 | Document Up Updating |
| | The following pages were revised to be consistant with the text: | | |
| B | 90, 92, 93, 96, 97, 101, 102a, 103a | | |
| | The following pages were revised to be compatible with the text of Section B: | | |
| D | 16, 17a, 17b, 28, 37 | | |
| E | 20, 23, 23a | | |
| APP I | 73, 96a, 96b, 96c, 113, 115, 116, 117, 118, 121 | | |
| APP II | 3a | | Document Updating |
| APP I | Revised MRCN 7720 | 71,71a 72 | ECP 590 |
| APP II | Added ACO 4662 | 48d | ECP 620 |

U3 4287 3025 ORIG. 8/62 2-5142-3

REV SYM 6-14-63

# ACTIVE-CHANGED PAGE

| ACTIVE | | | CHANGED | | | | | ACTIVE | | | CHANGED | | | | |
|---|---|---|---|---|---|---|---|---|---|---|---|---|---|---|---|
| SECTION | PAGE | DATE | SECTION | PAGE REVISED | PAGE ADDED | PAGE DELETED | DATE | SECTION | PAGE | DATE | SECTION | PAGE REVISED | PAGE ADDED | PAGE DELETED | DATE |
| B | 1 | 11-15-61 | B | COMPLETE | | | 8-31-61 | B | 36 | 1-11-63 | B | 50 | | | 2-1-62 |
| | 2 | 6-14-63 | | REVISION | | | | | 37 | 10-22-62 | | 51 | | | |
| | 3 | 6-14-63 | | | | | | | 38 | 10-22-62 | | 52 | | | |
| | 3a | 9-14-62 | | | 96a | 7 | | | 39 | 10-22-62 | | 53 | | | |
| | 3b | 11-26-62 | | | | 77 | | | 40 | 6-1-62 | | 54 | | | |
| | 3c | 6-14-63 | | | | 115 | | | 41 | 10-22-62 | | 55 | | | |
| | | | B | | | 119 | 8-31-61 | | 42 | 6-14-63 | | 56 | | | |
| | 4 | 11-15-61 | B | COMPLETE | | | 11-15-61 | | 43 | 6-14-63 | | 57 | | | |
| | 5 | 2-1-62 | | REVISION | | | | | 44 | 6-14-63 | | 58 | | | |
| | 6 | 11-15-61 | | | | | | | 45 | 11-26-62 | | 59 | | | |
| | 7 | 1-11-63 | | | 7 | | | | 46 | 6-1-62 | | 61 | | | |
| | 8 | 6-14-63 | | | 77 | | | | 47 | 9-14-62 | | 62 | | | |
| | 9 | 11-26-62 | | | 115 | | | | 48 | 11-26-62 | | 64 | | | |
| | 10 | 11-26-62 | | | 119 | | | | 49 | 10-22-62 | | 65 | | | |
| | 11 | 2-1-62 | | | 120 | | | | 50 | 6-14-63 | | 66 | | | |
| | 12 | 11-15-61 | B | | 121 | | 11-15-61 | | 51 | 1-11-63 | | 67 | | | |
| | 13 | 9-14-62 | B | 2 | | | 1-12-62 | | 52 | 10-22-62 | | 69 | | | |
| | 14 | 2-1-62 | | 3 | | | | | 52a | 7-13-62 | | 70 | | | |
| | 15 | 11-26-62 | | 60 | | | | | 53 | 11-26-62 | | 71 | | | |
| | | | B | 103 | | | 1-12-62 | | 54 | 1-11-63 | | 73 | | | |
| | 16 | 11-15-61 | B | 2 | 52a | | 2-1-62 | | 55 | 6-14-63 | | 76 | | | |
| | 17 | | | 3 | | | | | 56 | DELETED | | 77 | | | |
| | 18 | | | 5 | | | | | 57 | DELETED | | 78 | | | |
| | 19 | 11-15-61 | | 11 | | | | | 58 | DELETED | | 80 | | | |
| | 20 | Deleted | | 13 | | | | | 59 | 6-14-63 | | 82 | | | |
| | 21 | 11-15-61 | | 14 | | | | | 60 | 8-17-62 | | 85 | | | |
| | 22 | 11-26-62 | | 15 | | | | | 61 | 1-11-63 | | 86 | | | |
| | 23 | 1-11-63 | | 24 | | | | | 62 | 6-14-63 | | 89 | | | |
| | 24 | 1-11-63 | | 27 | | | | | 62a | 1-11-63 | | 90 | | | |
| | 25 | 1-11-63 | | 28 | | | | | 63 | 6-14-63 | | 91 | | | |
| | 26 | 10-22-62 | | 29 | | | | | 64 | 6-14-63 | | 92 | | | |
| | 27 | 10-22-62 | | 30 | | | | | 65 | 6-1-62 | | 93 | | | |
| | 28 | 6-14-63 | | 31 | | | | | 66 | 8-17-62 | | 94 | | | |
| | 28a | 8-11-62 | | 32 | | | | | 67 | 8-17-62 | | 95 | | | |
| | 29 | 10-22-62 | | 33 | | | | | 68 | 1-11-63 | | 96 | | | |
| | 30 | 1-11-63 | | 34 | | | | | 69 | 10-22-62 | | 97 | | | |
| | 31 | 10-22-62 | | 36 | | | | | 70 | 2-1-62 | | 98 | | | |
| | 32 | 6-14-63 | | 37 | | | | | 71 | 6-14-63 | | 99 | | | |
| | 33 | 10-22-62 | | 38 | | | | | | | | 100 | | | |
| | 34 | 6-1-62 | | 39 | | | | | | | | 101 | | | |
| | 35 | 11-26-62 | | 40 | | | | | | | | 102 | | | |
| | | | | 41 | | | | | | | | 103 | | | |
| | | | | 42 | | | | | | | | 104 | | | |
| | | | | 45 | | | | | | | | 106 | | | |
| | | | | 46 | | | | | | | | 108 | | | |
| | | | | 47 | | | | | | | | 111 | | | |
| | | | | 48 | | | | | | | | 112 | | | |
| | | | | 49 | | | | | | | B | 114 | | | 2-1-62 |

# ACTIVE-CHANGED PAGE

| ACTIVE | | | CHANGED | | | | | ACTIVE | | | CHANGED | | | | |
|---|---|---|---|---|---|---|---|---|---|---|---|---|---|---|---|
| SECTION | PAGE | DATE | SECTION | PAGE REVISED | PAGE ADDED | PAGE DELETED | DATE | SECTION | PAGE | DATE | SECTION | PAGE REVISED | PAGE ADDED | PAGE DELETED | DATE |
| B | 72 | 9-14-62 | B | 115 | | | 2-1-62 | B | 113 | 6-1-62 | B | 59 | | | 6-1-62 |
| | 73 | 6-1-62 | | 116 | | | | | 114 | 2-1-62 | | 60 | | | |
| | 74 | 6-1-62 | | 118 | | | | | 115 | 2-1-62 | | 61 | | | |
| | 75 | 1-11-63 | | 119 | | | | | 116 | 2-1-62 | | 62 | | | |
| | 76 | 2-1-62 | | 120 | | | | | 117 | 11-15-61 | | 63 | | | |
| | 77 | DELETED | B | 121 | | | 2-1-62 | | 118 | 2-1-62 | | 64 | | | |
| | 78 | | | 2 | 102a | | 6-1-62 | | 119 | 2-1-62 | | 65 | | | |
| | 79 | | | 3 | | | | | 120 | 2-1-62 | | 66 | | | |
| | 80 | | | 8 | | | | B | 121 | 6-1-62 | | 67 | | | |
| | 81 | | | 9 | | | | | | | | 68 | | | |
| | 82 | | | 10 | | | | | | | | 69 | | | |
| | 83 | | | 13 | | | | | | | | 71 | | | |
| | 84 | | | 22 | | | | | | | | 72 | | | |
| | 85 | | | 23 | | | | | | | | 73 | | | |
| | 86 | DELETED | | 24 | | | | | | | | 74 | | | |
| | 87 | 11-26-62 | | 25 | | | | | | | | 75 | | | |
| | 88 | 11-26-62 | | 26 | | | | | | | | 77 | | | |
| | 89 | 11-26-62 | | 27 | | | | | | | | 78 | | | |
| | 90 | 6-14-63 | | 28 | | | | | | | | 80 | | | |
| | 91 | 11-26-62 | | 29 | | | | | | | | 81 | | | |
| | 92 | 6-14-63 | | 30 | | | | | | | | 82 | | | |
| | 93 | 6-14-63 | | 31 | | | | | | | | 84 | | | |
| | 94 | 11-26-62 | | 32 | | | | | | | | 86 | | | |
| | 95 | 11-26-62 | | 34 | | | | | | | | 87 | | | |
| | 96 | 6-14-63 | | 35 | | | | | | | | 88 | | | |
| | 97 | 6-14-63 | | 36 | | | | | | | | 89 | | | |
| | 98 | 11-26-62 | | 37 | | | | | | | | 92 | | | |
| | 99 | 1-11-63 | | 38 | | | | | | | | 94 | | | |
| | 100 | 1-11-63 | | 39 | | | | | | | | 95 | | | |
| | 101 | 6-14-63 | | 40 | | | | | | | | 96 | | | |
| | 102 | 11-26-62 | | 41 | | | | | | | | 97 | | | |
| | 102a | 6-14-63 | | 42 | | | | | | | | 98 | | | |
| | 103 | 1-11-63 | | 43 | | | | | | | | 99 | | | |
| | 103a | deleted | | 44 | | | | | | | | 100 | | | |
| | 104 | 10-22-62 | | 45 | | | | | | | | 101 | | | |
| | 105 | 11-15-61 | | 46 | | | | | | | | 102 | | | |
| | 106 | 10-22-62 | | 47 | | | | | | | | 103 | | | |
| | 107 | 6-1-62 | | 48 | | | | | | | | 104 | | | |
| | 108 | 6-1-62 | | 49 | | | | | | | | 106 | | | |
| | 109 | 6-1-62 | | 50 | | | | | | | | 107 | | | |
| | 110 | 11-15-61 | | 51 | | | | | | | | 108 | | | |
| | 111 | 10-22-62 | | 52 | | | | | | | | 109 | | | |
| B | 112 | 2-1-62 | B | 52a | | | 6-1-62 | | | | B | 113 | | | 6-1-62 |
| | | | | 53 | | | | | | | | 121 | | | |
| | | | | 55 | | | | | | | | | | | |
| | | | | 56 | | | | | | | | | | | |

REVISED 6-14-63

U3 4288 1000

# ACTIVE-CHANGED PAGE

| ACTIVE | | | CHANGED | | | | | ACTIVE | | | CHANGED | | | | |
|---|---|---|---|---|---|---|---|---|---|---|---|---|---|---|---|
| SECTION | PAGE | DATE | SECTION | PAGE REVISED | PAGE ADDED | PAGE DELETED | DATE | SECTION | PAGE | DATE | SECTION | PAGE REVISED | PAGE ADDED | PAGE DELETED | DATE |
| | | | B | 2 | 3C | | 1-11-63 | | | | | | | | |
| | | | | 3 | | | | | | | | | | | |
| | | | | 17 | | | | | | | | | | | |
| | | | | 23 | | | | | | | | | | | |
| | | | | 24 | | | | | | | | | | | |
| | | | | 25 | | | | | | | | | | | |
| | | | | 30 | | | | | | | | | | | |
| | | | | 32 | | | | | | | | | | | |
| | | | | 36 | | | | | | | | | | | |
| | | | | 51 | | | | | | | | | | | |
| | | | | 54 | | | | | | | | | | | |
| | | | | 59 | | | | | | | | | | | |
| | | | | 61 | | | | | | | | | | | |
| | | | | 62a | | | | | | | | | | | |
| | | | | 68 | | | | | | | | | | | |
| | | | | 75 | | | | | | | | | | | |
| | | | | 99 | | | | | | | | | | | |
| | | | | 100 | | | | | | | | | | | |
| | | | | 102a | | | | | | | | | | | |
| | | | | 103 | | | | | | | | | | | |
| | | | | 103a | | | | | | | | | | | |
| | | | B | | | | 1-11-63 | | | | | | | | |
| | | | B | 2 | | | 6-14-63 | | | | | | | | |
| | | | | 3 | | | | | | | | | | | |
| | | | | 3C | | | | | | | | | | | |
| | | | | 8 | | | | | | | | | | | |
| | | | | 28 | | | | | | | | | | | |
| | | | | 32 | | | | | | | | | | | |
| | | | | 42 | | | | | | | | | | | |
| | | | | 43 | | | | | | | | | | | |
| | | | | 44 | | | | | | | | | | | |
| | | | | 50 | | | | | | | | | | | |
| | | | | 55 | | | | | | | | | | | |
| | | | | 59 | | | | | | | | | | | |
| | | | | 62 | | | | | | | | | | | |
| | | | | 63 | | | | | | | | | | | |
| | | | | 64 | | | | | | | | | | | |
| | | | | 71 | | | | | | | | | | | |
| | | | | 90 | | | | | | | | | | | |
| | | | | 92 | | | | | | | | | | | |
| | | | | 93 | | | | | | | | | | | |
| | | | | 96 | | | | | | | | | | | |
| | | | | 97 | | | | | | | | | | | |
| | | | | 101 | | | | | | | | | | | |
| | | | | 102a | | | | | | | | | | | |
| | | | B | | | 102a | 6-14-63 | | | | | | | | |

See Revision Description page preceeding Document Table of Contents

SECTION B

GROUND RULES (Cont.)

3.

These devices will not be removed at A/F Plant 77 unless physical damage is incurred during rocket motor missile handling or assembly.

4. Storage Bldgs. will be utilized for storage of either Stage I, II and III Rocket Motors or missiles. R

5. Transport of rocket motors from storage bldgs. to the MAB will be by SSCBM or other approved vehicles. (See B4.4 for alternate method.)

6. The assembled missile will be transferred from the MAB Missile Joining Rails to a SSCBM for subsequent disposition.

7. All missile and rocket motor transfers will be accomplished by special handling crews, assigned to the Facilities and Services Unit, dispatched upon request to the Material Handling Dispatcher. These crews, will report to the designated area with the appropriate transfer equipment.

8. Assembly of missile components and sections will be predicated on interchangeability in accordance with the requirements of MIL-I-8500A as implemented by associate contractor adherence to Assembly and Interface Control Drawing tolerances.

9. The completed missile will be delivered to the Air Force with the following OGE/MGE items installed on the missile.

   a. Rocket Motor Carriages (received with rocket motors) (MGE 4078, 4120, and 4121)

   b. Adapter, Ring, Missile Support (OGE 1252)

   c. Clamp Set, Adapter Ring to Missile Skirt (MGE 4069)

   d. Cover, End-G&C Section (FSE 7600)

   e. Alarm Set, Missile Storage - Transit Status (MGE 4187)

| ASSEMBLY OR CHECKOUT FUNCTION AND TECHNICAL REQUIREMENTS | RECOMMENDED EQUIPMENT OR DOCUMENT |
|---|---|
| 2.2 TRANSPORT, HANDLE AND STORE ROCKET MOTORS | |
| Stage I, II and III motors shall be placed and stored in the Motor Storage Bldg. with nozzles pointed away from the door. | D2-12214 Rocket Motor Inspection Procedure, Storage and Safety, Stage II |
| Motor Transport, Handling and Storage Procedures are required and shall be in accordance with the respective motor manufacturer's procedures and Document D2-12872. The motors shall arrive at the motor transfer positions (in front of each Motor Storage Bldg.) aboard rocket motor trucks. | D2-11777 Stage III Transportation and Handling Procedures D2-12216 Handling, Operating & Maintenance ; M 56 Rocket Motor (Stage II) D2-12369 Transportation Handling & Storage M55 Rocket Motor (Stage I) |

| ASSEMBLY OR CHECKOUT FUNCTION AND TECHNICAL REQUIREMENTS | RECOMMENDED EQUIPMENT OR DOCUMENT |
|---|---|
| 2.2.3.1 INSTALL ROCKET MOTOR IMPALER<br>It is required that the Impaler be installed on the rails. The Rocket motor Impaler shall be positioned as specified in Document D2-13907. Safety requirements specified in D2-12872 shall be complied with. | Impaler, Missile/ Motor (FSE 7789) |
| 2.3 TRANSPORT, HANDLE AND STORE-ORDNANCE DEVICES<br>Transportation, handling and storage procedures shall be in accordance with Document D2-9133. Safety requirements specified in Document D2-12872 shall be complied with. | D2-9133 |
| 2.3.1 TRANSPORT, HANDLE AND STORE-NON-FUNCTIONAL TEST ITEMS<br>The Linear Charges shall be transported from their Receiving and Inspection Area to the storage area. Transportation and handling to MAB for installation is required immediately prior to B11.8. | Truck, Motor-Misc. Delivery (ACO 452)<br>Shelving, Storage (ACO 462) |
| 2.3.2 TRANSPORT TO FUNCTIONAL TEST AREA<br>The Detonator Assemblies (Stage Separation), spare Motor Ignition Safe and Arm, spare Third Stage Thrust Termination Arm - Disarm and Interstage Arm-Disarm devices require functional testing and shall be delivered to the Ordnance Test Area for functional testing, see B3.3.) | |

FUNCTION B2.3

| ASSEMBLY OR CHECKOUT FUNCTION AND TECHNICAL REQUIREMENTS | RECOMMENDED EQUIPMENT OR DOCUMENT |
|---|---|
| 4.2.1 PREPARE FOR TRANSFER TO SSCBM | |
| The requirement exists to transfer rocket motors from the Motor Storage Building to the SSCBM for transport to the MAB. Provisions shall be made to insure against exposure of the rocket motors to environment exceeding the specified limits. | Rails, Storage-Motor & Missile (FSE 7629)<br>D2-10907 (O&M)<br>Shelter, Missile & Motor, Environmental M/MSB (FSE 7687)<br>D2-10996 (O&M) |
| NOTE: Impaler shall be lowered prior to roll transfer of the motors as specified in D2-13907. | |
| Other equipment is required to provide the following: | |
| A. A means to receive, house, support, provide transfer and transport power, and provide environmental control to rocket motors (Stage I, II and III) | Shipping & Storage Container, Ballistic Missile (MGE 4095)<br>D2-13907<br>Trailer, Ballistic Missile (MGE 4129)<br>Tractor (MGE 4130)<br>Skis, SSCBM (MGE 4493)<br>Air Conditioner (MGE 4115) |
| B. A means to support and align the aft end of the Ballistic Missile Trailer in position for roll transfer. | Jack Set, Translating (ACO 4175) |
| C. A means to provide illumination for night transfer. | Lamp, Incandescent Portable Flood (ACO 4425)<br>Cable, Assembly, Power Electrical, Flood Lamps (ACO 449) |

FUNCTION B4.2.1

| ASSEMBLY OR CHECKOUT FUNCTION AND TECHNICAL REQUIREMENTS | RECOMMENDED EQUIPMENT OR DOCUMENT |
|---|---|
| 4.2.1 PREPARE FOR TRANSFER TO SSCBM (CONT) | |
| D. A means to connect the rail system in the storage building to the rail system in the SSCBM. This connection must be of adequate strength to support any stage rocket motor. | Rail Assembly, Bridge, Engine Transfer (FSE 7756) |
| E. A means to provide trailer electrical grounding during transfer operations. | Lead, Electrical Grounding (ACO 352) |
| F. A means to connect the Ballistic Missile Trailer winch cable to Stage I, Stage II, and Stage III Rocket Motor Carriages. | Control-Winch MAB-Storage Bunker (FSE 7688)<br>Bridle-Rocket Motor Stage I (FSE 7689) D2-10933 (O&M)<br>Bridle-Rocket Motor Stage III (FSE 7690) D2-10939 (O&M) D2-9555 (OPR) |
| 4.2.2 TRANSFER ROCKET MOTORS TO SSCBM | |
| Roll transfer the rocket motors from the storage bldg. into the SSCBM, using the Ballistic Missile Trailer winch for propulsion, then secure for transportation. All transfer equipment except the Ballistic Missile Trailer winch cable shall be removed and stowed or returned to dispatcher. | Tie-Down, Rocket Motor Carriage to SSCBM (part of SSCBM) |

| ASSEMBLY OR CHECKOUT FUNCTION AND TECHNICAL REQUIREMENTS | RECOMMENDED EQUIPMENT OR DOCUMENT |
|---|---|
| 4.2.3 TRANSPORT ROCKET MOTORS TO MAB | |
| 4.2.4 PREPARE FOR ROCKET MOTOR TRANSFER TO MAB | |
| Position SSCBM at MAB by leveling and aligning to the Missile Joining Rails and utilizing the transfer equipment previously described in B4.2.1. | Equipment required same as in B4.2.1 except stroage rails & Missile/Motor Bldg Shelter. |
| The Missile Joining Rails are required to support Rocket Motors on carriages in the MAB and to provide a means for roll transfer of rocket motors. These rails are positioned to match the transfer equipment and shall include a grounding cable for rocket motor transfer, a power winch and necessary sheaves, wheel blocks to prevent movement of motors and provisions for grounding rocket motor carriages and for receiving transfer bridge rails. | Rails, Missile Joining (FSE 7628) D2-10901 (O&M) |
| Provisions shall be made to insure against exposure of the rocket motors to environment exceeding the specified limits. | Shelter, Missile & Motor Transfer-Environmental-MAB (FSE 7682) D2-10993 (O&M) |
| 4.2.5 TRANSFER ROCKET MOTORS TO MAB | |
| Roll transfer the rocket motors from the SSCBM onto the MAB Missile Joining Rails using the MAB Rails winch for propulsion. After the rocket motors are positioned, the horizontal restraint rings shall be removed. Rocket Motor containment device shall be positioned as specified in Document D2-13907. | Sling-Horizontal Restraint Ring, Engine (FSE 7632) D2-11012 (O&M)<br>Hoist, Overhead, Rail Type (Facility)<br>Missile/Motor Impaler (FSE 7789) |
| | FUNCTION B4.2.3 |



2-6354-4-2

| ASSEMBLY OR CHECKOUT FUNCTION AND TECHNICAL REQUIREMENTS | RECOMMENDED EQUIPMENT OR DOCUMENT |
|---|---|
| 7.0 PRE-ASSEMBLE MISSILE LESS G&C SECTION | |
| The requirement exists to attain the configuration necessary to perform the Ordnance Safing and Arming Circuit Test per B8.0. Detailed assembly procedures shall be per Engineering Drawings and Documents. | |
| NOTE: Mechanical interface discrepancies will be isolated to the discrepant component utilizing the Fault Isolation Tool Set. | |
| 7.1 POSITION RACEWAY CABLES | |
| The Raceway Cables shall be hand-carried from their containers and manually placed loosely into position on their respective motors. The cables shall not be connected at this time. | Drawing 25-27524<br>Rails-Missile Joining(FSE 7628) D2-10901 (O&M)<br>Scaffolding-Missile Access (FSE 7630) D2-10903 (O&M) |
| 7.2 INSTALL HEAT SHIELDS | |
| The following items shall be installed per drawing:<br>A. Deflector Assembly - Base Heating, Stage I<br>B. Deflector Assembly - Base Heating, Stage II<br>C. Deflector Assembly - Base Heating, Stage III | Engineering Drawings:<br>25-25879<br>25-25880<br>25-25881 |
| 7.3 INSTALL STAGE I SKIRT | |
| The skirt shall be installed per Engineering Drawing through the point of finger tightening of the motor-to-skirt attaching bolts. | Engineering Drawing 25-27208<br>Dolly, Joining-Skirt to Engine (FSE 7709) D2-10931 (O&M) |
| Equipment to hoist, position, assemble and install the skirt shall be required. | Sling & Harness-Engine Skirt (FSE 7636) D2-10974 (O&M) |
| Remove the joining dolly from the missile joining rails | |



REVISE: 6-14-63

| ASSEMBLY OR CHECKOUT FUNCTION AND TECHNICAL REQUIREMENTS | RECOMMENDED EQUIPMENT OR DOCUMENT |
|---|---|
| 9.0 INSTALL G&C SECTION | |
| The G&C section must be positioned to allow connection of raceway cabling and finger tight installation of bolts. | |
| NOTE: Mechanical interface discrepancies will be isolated to the discrepant component utilizing the Fault Isolation Tool Set | |
| 9.1 PREPARE FOR INSTALLATION OF G&C SECTION | |
| Installation preparations include:: | |
| A. Removing the upper section of the G&C section container. | Hoist, Overhead Rail Type (Facility) |
| B. Lifting the G&C Section including the G&C End Cover, Support Ring, Window Protective Cover and Umbilical Dust Cover from the lower section of the container and placing on the Positioning Dolly. | Sling, Standard Factory-4 drop (ACO 454) Sling and Harness G&C Section (FSE 7634) D2-10990 (O&M) |
| C. Placing the positioning dolly on the Missile Joining rails, and removing the G&C section support ring. | Dolly, Positioning G&C Section (FSE 7707) D2-10935 (O&M) Drawing 25-27596 |
| NOTE: (1) The Window Protective Cover will not be removed, and the Umbilical Cover will be removed immediately prior to insertion of the G&C Umbilical Cable and reinstalled immediately after umbilical removal. | |
| 9.2 PERFORM INSTALLATION OF G&C SECTION | |
| Position the G&C section, connect the raceway cabling, remove the raceway cabling connection "T" handle (similiar to Autonetics part 200X-375-55) and install the interface bolts finger tight. Remove the positioning dolly. | |

| ASSEMBLY OR CHECKOUT FUNCTION AND TECHNICAL REQUIREMENTS | RECOMMENDED EQUIPMENT OR DOCUMENT |
|---|---|
| 11.0 Complete Missile Assembly | |
| Complete assembly of the missile per engineering drawings and documents. | |
| NOTE: Mechanical interface discrepancies will be isolated to the discrepant component utilizing the Fault Isolation Tool Set . | |
| 11.1 INSTALL SKIRT REMOVAL DETONATORS AND SAFE AND ARM DEVICES | |
| The skirt removal safe and arm devices and detonators shall be installed to the L.H. interstage panels. | Dwg. 25-27238 |
| 11.2 CLAMP AND SECURE CABLING | |
| All internal cabling shall be secured. | Dwg. 25-27524 |
| 11.3 INSTALL INTERSTAGE R.H. FORWARD AND L.H. PANELS | Harness, Missile-Interstage I-II R.H. Panel (FSE 7641) D2-10949 (O&M) Harness, Missile Interstage II-III Right Hand Panel (FSE 7730) D2-11074 (O&M) Harness, Missile Interstage II-III L.H. Panel (FSE 7731) D2-11072 (O&M) Harness, Missile Interstage I-II L.H. Panel (FSE 7642) D2-10994 (O&M) |
| The right hand forward panels of each interstage shall be installed; then the left hand panels with the skirt removal detonators shall be installed. | |
| NOTE: Prior to installation of R.H. forward panels, ensure that Stage II and Stage III nozzle covers are removed. | |
| 11.4 INSTALL ORDNANCE SAFETY-PIN LANYARDS AND STREAMERS | |
| The red streamers with lanyards shall be installed to indicate the presence of ordnance safety pins. (See D2-9133) | D2-9133 |
| 11.5 INSTALL AND TORQUE STRUCTURAL FASTENERS | Drawings 21-50150 25-27202 21-51750 25-27205 21-51725 25-27208 25-27596 |
| Torque bolts and check bolt installation. Detail Procedures will be contained on the Engineering Drawings | |

| ASSEMBLY OR CHECKOUT FUNCTION AND TECHNICAL REQUIREMENTS | RECOMMENDED EQUIPMENT OR DOCUMENT |
|---|---|
| 12.0 PERFORM MISSILE ACCEPTANCE & FUNCTIONAL TESTS | |
| Testing is required to verify that the final assembly operation has not affected system performance. This testing shall include verification of (1) all subsystems that could have been affected by the assembly operation, (2) all sub-systems which depend upon an interface relationship which is not completed until missile assembly, and (3) the battery and First Stage ignition squib circuit test. Detailed test procedures are required and shall be covered in Document D2-9520. | D2-9520 SM-80 Functional Test Procedures |
| 12.1 CONNECT TEST EQUIPMENT | |
| The Test Control Room, as shown in Figure 7-B and the Test Position, as shown in Figure 9-B are required. A no voltage check of the test umbilicals shall be accomplished prior to connection to the missile G&C section and skirt umbilical connectors. A Re-Entry Vehicle Dummy Load shall be connected to the G&C section. | Adapter, Spanner Wrench (ACO 3119)<br>Dummy Load, Re-Entry Vehicle (FSE 7722)<br>Test Set Assembly<br>Ordnance Circuit (FSE 7679)<br>D2-13445 |
| MISSILE TEST POSITION | |
| Console, Missile Checkout (FSE 7723) | Missile Test Positio (See left) |
| Liquid cooling equipment, Ground Guidance & Control (ACO 9278) | D2-10825-104 (O&M) |
| Power Supply, D.C. Portable C-95 (ACO 0667) | EM-2386 (O&M) |
| Power Supply Group, MAB (FSE 7717) | |
| Junction Box Auxiliary, MAB (FSE 7739) | |
| Junction Box, Test, MAB (FSE 7721) | |
| Lead, Electrical Assy. (Missile Bonding Test) (ACO 4662) | |

| ASSEMBLY OR CHECKOUT FUNCTION AND TECHNICAL REQUIREMENTS | RECOMMENDED EQUIPMENT OR DOCUMENT |
|---|---|
| 13.0 MISSILE HANDLING FOR SHIPMENT<br><br>The requirement exists for handling a completed missile by transferring, transporting, storing (as required) and loading for shipment at, or between, the various facilities at A/F Plant 77.<br><br>Detailed procedures for storing, transferring, transporting and environmental protection of the missile are required and shall be covered in Document D2-13907.<br><br>Operating procedures for the SSCBM, Ballistic Missile Trailer, Tractor, and the Air Conditioner shall be covered in Document D2-13907.<br><br>The completed missile shall be transferred, by SSCBM, from the MAB to the Missile Storage Bldgs, Missile Transient Storage Area or Airplane/Rail Loading Areas as required. All missile transfers will be accomplished by the motor and missile handling crew who will be dispatched through the material handling dispatcher.<br><br>Environmental protection of missiles during transfer operations under adverse weather conditions, is required in order to maintain missile environmental control within allowable tolerances.<br><br>NOTE: Rocket Motor Impaler shall be be lowered prior to missile loading for delivery. | D2-13907<br><br>FUNCTION B13.0 |

| ASSEMBLY OR CHECKOUT FUNCTION AND TECHNICAL REQUIREMENTS | RECOMMENDED EQUIPMENT OR DOCUMENT |
|---|---|
| B13.1 PREPARE FOR MISSILE TRANSFER ROLL FROM MAB | |
| Preparation for roll transfer involves preparing the transfer area, positioning the Ballistic Missile Trailer, removing Tractor, installing translating and alignment equipment, securing SSCBM to MAB Rails and providing for adverse weather conditions, as required. In addition, this function includes rigging and installing transfer equipment. (See Figure 17-B). The following is required: | D2-13907, Missile Handling and Transporting<br>Shelter, Missile and Motor Transfer-Environmental-MAB (FSE 7682)<br>D2-10993 (O&M) |
| A. A means to support the missile on the Rocket Motor Carriages and provide for missile roll transfer. These rails shall include a permanently installed electric winch, a grounding cable for missile transfer, snatch block for use with transfer cables, wheel blocks to prevent movement of missile, and provisions for grounding rocket motor carriages, for joining to SSCBM Rails and for mounting of alignment equipment. | Rails-Missile Joining (FSE 7628)<br>D2-10901 (O&M)<br>Spacer, Rail Ends, SSCBM, MAB & MSB (FSE 7794) |
| B. A means to provide electrical bonding between carriages during transfer is required. | |

| ASSEMBLY OR CHECKOUT FUNCTION AND TECHNICAL REQUIREMENTS | RECOMMENDED EQUIPMENT OR DOCUMENT |
|---|---|
| 13.6 PREPARE FOR MISSILE TRANSFER TO STORAGE | |
| Preparation for missile transfer to storage involves verifying the environmental condition in the Missile Storage Building, positioning Ballistic Missile Trailer, removing tractor, installing electrical grounding leads, translating jacks and alignment equipment, connecting the SSCBM (on trailer) to storage rails, rig transfer equipment, installing trailer support jacks, removing SSCBM Restraint Adapter, rocket motor carriage tie-downs and grounding jumpers, disconnecting the Alarm Set, if installed, from the SSCBM junction box and providing for adverse weather conditions, as required. | NOTE: See B13.1 and B13.2 for equipment. Same equipment will be used here except for rails, Missile Joining and the MAB Environmental Shelter<br>D2-13907<br>Shelter, Missile and Motor, Transfer, Environmental Missile Motor Storage Bldg. (FSE 7687) |
| A. Rails are required to support the missile on rocket motor carriages in the Missile Storage Building and provide the means for missile roll transfer. Rails shall include permanently installed electric winches, a grounding cable for missile transfer, snatch block for use with transfer cables, wheel blocks to prevent movement of missile and have provisions for grounding of rocket motor carriages, joining to SSCBM rails and mounting of alignment targets. | D2-10996 (O&M)<br>Rails, Storage-Engine and Missile (FSE 7629)<br>D2-10907 (O&M)<br>Spacer, Rail Ends, SSCBM, MAB, MSB (FSE 7794) |
| B. A means of recording temperature conditions in the Missile Storage Building is required. | Recorder, Temperature (Facilities) |
| A means of recording humidity in random Storage Bldgs. is required to indicate representative humidity. | Recorder, Humidity (Facilities) |
| | FUNCTION B13.6 |

b1

REVISED 6-14-63

## MISSILE ASSEMBLY & CHECKOUT EQUIPMENT

| IDENT. NO. | NOMENCLATURE | CLASS | LOCATION & FUNCTION NUMBER | | | | | |
|---|---|---|---|---|---|---|---|---|
| | | | CPA | MAB | ORDNANCE PROCESSING | MISSILE & MOTOR STORAGE | MISSILE TRANSFER AREA | MISC |
| 7689 | Bridle, Rocket Motor, Stage I | FSE | | | | B2.2,B4.2 | | |
| 7690 | Bridle, Rocket Motor, Stage III | FSE | | | | B4.2 | | |
| ~~7691~~ | ~~Positioning Set, Rocket Motor Carriage~~ | ~~FSE~~ | | | | ~~B4.2~~ | | |
| 7696 | Test Set and Adapter Cables - Raceway Cables | FSE | | B7.6 | | | | |
| 7701 | Adapter, Joining-NCU, Stage I | FSE | | B5.1 | | | | |
| 7702 | Adapter, Joining-Nozzle Control Unit, Stage II | FSE | | B5.1 | | | | |
| 7703 | Adapter, Joining-Nozzle Control Unit, Stage III | FSE | | B5.1 | | | | |
| 7707 | Dolly, Positioning-G&C Section | FSE | | B9.1 | | | | |
| 7708 | Dolly, Positioning-Final Assembly | FSE | | B5.1 | | | | |

02

REVISED 6-19-63

## MISSILE ASSEMBLY & CHECKOUT EQUIPMENT

| IDENT. NO. | NOMENCLATURE | CLASS | LOCATION & FUNCTION NUMBER | | | | | |
|---|---|---|---|---|---|---|---|---|
| | | | CPA | MAB | ORDNANCE PROCESSING | MISSILE & MOTOR STORAGE | MISSILE TRANSFER AREA | MISC |
| 7731 | Harness-L. H. Panel, Missile Inter-stage II-III | FSE | | B11.3,B7.4 | | | | |
| 7739 | Junction Box, Auxiliary, MAB | FSE | | ~~B10.1~~,B8.1, B6.1,B8.2, B12.1 | | | | |
| 7740 | Box, Test, Ordnance Cable | FSE | | B8.2 | | | | |
| 7742 NCU | Cable Assemblies, Interconnecting, Linkage Adjustment, CPA | FSE | B3.1 | | | | | |
| 7743 | Distribution Box, NCU Linkage Adjustment, CPA | FSE | B3.1 | | | | | |
| 7744 | Power Supply Group, NCU Linkage Adjustment, CPA | FSE | B3.1 | | | | | |
| ~~7745~~ | ~~Bridle, Carriage, 1st Stage (Rocket Motor Truck)~~ | ~~FSE~~ | | | | ~~B2.2,B4.2~~ | | |
| 7756 | Rail Assembly, Bridge-Engine Transfer | FSE | | | | B2.2,B4.2 | | |
| 7760 | Pulley Bracket Assembly, Trans-porter, II & III Stage | FSE | | | | B2.2 | | |
| 7750 | Charging Cable Alarm Set | FSE | | [illegible] | | B14.1, [illegible], B12.9 | | |
| ~~7746~~ | ~~[illegible]~~ | ~~FSE~~ | | | | | | |
| 7748 | Test Adapter Cable, Stage I NCU P70B | FSE | | B6.1 | | | | |

12

MISSILE ASSEMBLY & CHECKOUT EQUIPMENT

| IDENT. NO. | NOMENCLATURE | CLASS | LOCATION & FUNCTION NUMBER | | | | | |
|---|---|---|---|---|---|---|---|---|
| | | | CPA | MAB | ORDNANCE PROCESSING | MISSILE & MOTOR STORAGE | MISSILE TRANSFER AREA | MISC |
| 7787 | Alarm Set, Transit Status, First Stage Motor | FSE | | | | B2.2<br>B4.2 | | |
| 7788 | Alarm Set Transit Status Third Stage Motor | FSE | | | | B2.2<br>B4.2 | | |
| 7789 | Impaler, Missile/Motor | FSE | | B4.2.5<br>B4.4 | | B2.2<br>B4.2.1 | | |
| 10151 | Gage, NCU Alignment, Stage I | FSE | B3.1 | | | | | |
| 10153 | Gage, NCU Verification, Stage I | FSE | | B6.1 | | | | |
| 10155 | Gage, NCU Alignment, Stage II | FSE | B3.1 | | | | | |
| 10157 | Gage, NCU Verification, Stage II | FSE | | B6.1 | | | | |
| 10159 | Gage, NCU Alignment, Stage III | FSE | B3.1 | | | | | |
| 10161 | Gage, NCU Verification, Stage III | FSE | | B6.1 | | | | |
| 7793 | Bracket, Spacer Stage II NCU | FSE | B3.1 | | | | | |
| 7794 | Spacer, Rail Ends, SSCBM - MAB and MSB | FSE | | 13.1 | | 13.6 | | |

## MISSILE ASSEMBLY & CHECKOUT EQUIPMENT

| IDENT. NO. | NOMENCLATURE | CLASS | LOCATION & FUNCTION NUMBER | | | | | |
|---|---|---|---|---|---|---|---|---|
| | | | CPA | MAB | ORDNANCE PROCESSING | MISSILE & MOTOR STORAGE | MISSILE TRANSFER AREA | MISC |
| [illegible]101 | Semitrailer, Rocket Motor | FSE | | | | | | B1.1.1 B4.4, B2.1 B4.1 |
| ACO 0565 | Facility Test Fixture | ACO/OH | B3.1, B4.1 | | | | | |
| ACO 466 | Purging and Drying Kit | ACO/OH | | B12.3 | | | | |
| ACO 0608 | Hoisting Sling and Cover (H6A) | ACO/OH | B3.1, B4.1 | | | | | |
| ACO 0667 | Power Supply, D.C. Portable, C95 | ACO/OH | | ~~B6.1~~, B8.1, B8.2, ~~B10.1~~ B12.1 | | | | |
| ACO 9278 | Liquid Cooling Equipment, Ground Guidance and Control | ACO/OH | | ~~B6.1~~, B8.1, B8.2, ~~B10.1~~ B12.1 | | | | |
| ACO 3119 | Adapter, Spanner Wrench | ACO/OH | | B8.1, ~~B10.1~~, ~~B10.3~~, B12.3 B12.1 | | | | |
| ACO 4047 | Wrench, Safing Pin Inst. & Removal | ACO/OH | | | B3.3 | | | |
| ACO 4175 | Jack Set, Translating | ACO/OH | | B13.1, B13.2, ~~B16.1~~, ~~B16.2~~ | | B4.2, B13.6, B13.7 B13.9, B13.10, ~~B16.6~~, ~~B16.7~~, ~~B16.9~~, ~~B16.10~~ | | |
| [illegible] | Kit, [illegible] | [illegible] | | | | | | |
| ACO 4662 | Lead, Electrical Assy (Missile Bonding Test) | ACO/OH | | B12.1 | | | | |

## MISSILE ASSEMBLY & CHECKOUT EQUIPMENT

| IDENT. NO. | NOMENCLATURE | CLASS | LOCATION & FUNCTION NUMBER | | | | | |
|---|---|---|---|---|---|---|---|---|
| | | | CPA | MAB | ORDNANCE PROCESSING | MISSILE & MOTOR STORAGE | MISSILE TRANSFER AREA | MISC |
| ACO 352 | Lead, Electrical Grounding | SFC/OH | | B13.1<br>B13.2<br>~~B16.1~~<br>~~B16.2~~ | | B2.2,B4.2<br>B13.6,B13.7<br>B13.9,~~B16.6~~<br>~~B16.7,B16.9~~<br>~~B16.10~~ | | B13.8,<br>~~B16.8~~ |
| ACO 4425 | Lamp, Incandescent - Portable Flood | SFC/OH | | B13.1,B13.2<br>~~B16.1,B16.2~~ | | B2.2,B4.2<br>~~B16.7,B16.9~~<br>~~B16.10~~,B13.6<br>B13.7,~~B16.6~~<br>B13.9,B13.10 | | B13.8<br>~~B16.8~~ |
| ACO 4524 | Wrench, Portable Electric | SFC/OH | | | | | B13.5 | |
| ACO 4525 | Stop, Railcar Wheel | SFC/OH | | | | | B13.5 | |
| ACO 4535 | Alignment Set, Missile Transfer | ACO | | B13.1,<br>~~B16.1~~ | | B13.6,<br>B13.9<br>~~B16.6~~<br>~~B16.9~~ | | |
| ACO 449 | Cable Assembly - Power Electrical, Portable Flood Lamps | SFC/OH | | B13.1,~~B16.1~~<br>B13.2,~~B16.2~~ | | B13.6,<br>B13.7<br>B13.10,<br>B13.9,<br>B2.2,B4.2<br>B16.6,B16.7<br>B16.9,<br>B16.10 | | B13.8,<br>~~B16.8~~ |

SECTION B - REQUIRED DOCUMENTS (CONT)

| DOC. NO. | TITLE | SECTION |
|---|---|---|
| D2-10931 | Operation and Maintenance-Dolly, Joining-Skirt to Engine | B7.3 |
| D2-10933 | Operating and Maintenance-Bridle-Rocket Motor Stage I | B2.2, B4.2 |
| D2-10935 | Operation and Maintenance-Dolly, Positioning-G&C Section | B9.1 |
| D2-10937 | Operation and Maintenance-Adapter, Joining NCU Stage II (Model A NCU) | B5.1 |
| D2-10939 | Operating and Maintenance-Bridle-Rocket Motor, Stage III | B4.2 |
| [illegible] | [illegible] | [illegible] |
| [illegible] | [illegible] | [illegible] |
| D2-10945 | Operation and Maintenance - Adapter, Joining NCU Stage I (Model A NCU) | B5.1 |
| D2-10947 | Operation and Maintenance - Adapter, Joining NCU Stage III | B5.1 |
| D2-10949 | Operation and Maintenance-Harness-R.H. Panel Missile Interstage I-II | B7.4, B11.3 |
| D2-10964 | Operation and Maintenance - Sling - Adapter Ring, Missile Base | B5.1 |
| D2-10974 | Operating and Maintenance - Sling & Harness Engine Skirt | B7.3 |
| D2-10990 | Operation and Maintenance-Sling and Harness- G&C Section | B9.1 |
| D2-10994 | Operation and Maintenance - Harness-L.H. Panel, Missile Interstage I-II | B7.4, B11.3 |
| D2-11004 | Operation and Maintenance - Installation Kit - Linear Explosive | B11.8 |
| D2-11012 | Operation and Maintenance - Sling - Horizontal Restraint Ring, Engine Stage I, II & III | B4.2 |
| D2-11014 | Operation and Maintenance - Sling - Adapter Ring, Missile Base | B11.7 |

SECTION B - REQUIRED DOCUMENTS (Continued)

| DOC. NO. | TITLE | SECTION |
|---|---|---|
| D2-12216 | M56 Rocket Motor, Handling, Operating, and Maintenance Instructions | B2.2, B4.2 B5.1 |
| D2-12217 | M56 Rocket Motor Post Assembly Test | B3.3 |
| D2-12369 | Transportation, Handling and Storage Instructions M55 Rocket Motor | B1.2 and B2.2 B4.2 |
| D2-12401 | Operation and Maintenance - Console, Missile Checkout | ~~B10.2~~ B12.2 |
| D2-12789 | Missile Handling and Transporting | B13.1 |
| D2-12974 | Rocket Motor Semitrailer Operation and Safety Instructions (Stage I, II, III) | B4.4 |
| D2-12977 | Operation and Maintenance - Test Set, NCU Zero Electrical Alighment | B6.1 |
| D2-13445 | Ordnance Component and Subsystem Functional Testing of Operational Missiles, Plant 77 | B8.1, B8.2 B12.1, B3.1 |
| D2-13482 | Functional Test Procedure, Arm/Disarm Mechanism, 10-20436 for Plant 77 | B3.3 |
| D2-13483 | Functional Test Procedurds, Detonator Assembly 10-20451, for Plant 77 | B3.3 |
| D2-13732 | NCU Linkage Adjustment Procedures | B3.1 |
| D2-13764 | G&C Section Purging and Drying Procedures | B12.3 |
| D2-13907 | Transportation and Handling Procedures, Plant 77 | B2.1, B4.2 B4.1, B13.1, B13.5, B13.6 B13.7, B13.9 B13.10, ~~B16.1~~ ~~B16.2, B16.5~~ ~~B16.6, B16.7~~ ~~B16.9, B16.10~~ |
| D2-14116 | Operating Procedures and Maintenance Instructions for Raceway Cable Test Set and Adapter Cables-MAB | B7.6 |
| AA0304-072 | NCU Sealing Specification | B3.1 |
| EM-2084 | Utility Technical Manual - Operation and Service | B3.1, B5.1 |
| EM 2386 | Operation and Service Instructions, Battery Power Supply Model C95A. | ~~B10.1~~ B12.1 |

# ACTIVE-CHANGED PAGE

| ACTIVE | | | CHANGED | | | | | ACTIVE | | | CHANGED | | | | |
|---|---|---|---|---|---|---|---|---|---|---|---|---|---|---|---|
| SECTION | PAGE | DATE | SECTION | PAGE REVISED | PAGE ADDED | PAGE DELETED | DATE | SECTION | PAGE | DATE | SECTION | PAGE REVISED | PAGE ADDED | PAGE DELETED | DATE |
| D | 1 | 11-15-61 | COMPLETE REVISION | | | | | | | | D | 31 | | | 6-1-62 |
| | 2 | 6-14-63 | | | | 36 | 8-31-61 | | | | | 32 | | | |
| | 2a | 6-14-63 | | | | 37 | 8-31-61 | | | | | 33 | | | |
| | 3 | 11-15-61 | | | | 38 | 8-31-61 | | | | | 34 | | | |
| | 4 | 10-22-62 | COMPLETE REVISION | | | | | | | | | 35 | | | |
| | 5 | 2-1-62 | | | 36 | | 11-15-61 | | | | D | 36 | | | 6-1-62 |
| | 6 | 11-15-61 | D | 2 | | | 2-1-62 | | | | D | 2 | | | 7-13-62 |
| | 7 | 11-15-61 | | 4 | | | | | | | | 4 | | | |
| | 8 | 7-13-62 | | 5 | | | | | | | | 8 | | | |
| | 9 | 1-11-63 | | 8 | | | | | | | | 9 | | | |
| | 10 | 7-13-62 | | 9 | | | | | | | | 10 | | | |
| | 11 | 8-17-62 | | 10 | | | | | | | | 11 | | | |
| | 11a | 1-11-63 | | 11 | | | | | | | | 11a | | | |
| | 12 | 8-17-62 | | 12 | | | | | | | | 12 | | | |
| | 13 | 8-17-62 | | 13 | | | | | | | | 13 | | | |
| | 14 | 4-15-63 | | 14 | | | | | | | | 14 | | | |
| | 15 | 10-22-62 | | 15 | | | | | | | | 15 | | | |
| | 15a | 10-22-62 | | 16 | | | | | | | | 17a | | | |
| | 16 | 6-14-63 | | 17 | | | | | | | | 17b | | | |
| | 17 | 4-15-63 | | 18 | | | | | | | | 18 | | | |
| | 17a | 6-14-63 | | 23 | | | | | | | | 19 | | | |
| | 17b | 6-14-63 | | 27 | | | | | | | | 21 | | | |
| | 18 | 8-17-62 | | 28 | | | | | | | | 26 | | | |
| | 19 | 7-13-62 | | 29 | | | | | | | | 27 | | | |
| | 20 | 11-15-61 | | 30 | | | | | | | | 29 | | | |
| | 21 | 7-13-62 | | 31 | | | | | | | | 30 | | | |
| | 22 | 11-15-61 | | 32 | | | | | | | | 31 | | | |
| | 23 | 2-1-62 | | 33 | | | | | | | | 32 | | | |
| | 24 | 11-26-62 | | 34 | | | | | | | | 34 | | | |
| | 25 | 11-15-61 | | 35 | | | | | | | | 35 | | | |
| | 26 | 7-13-62 | D | 36 | | | 2-1-62 | | | | | 36 | | | |
| | 27 | 1-11-63 | D | 2 | 11a | | 6-1-62 | | | | D | 37 | | | 7-13-62 |
| | 28 | 6-14-63 | | 4 | | | | | | | D | 2 | | | 8-17-62 |
| | 29 | 10-22-62 | | 8 | 15a | | | | | | | 4 | | | |
| | 30 | 7-13-62 | | 9 | 17a | | | | | | | 11 | | | |
| | 31 | 8-17-62 | | 10 | | | | | | | | 12 | | | |
| | 32 | 10-22-62 | | 11 | 17b | | | | | | | 13 | | | |
| | 33 | 4-15-63 | | 12 | 37 | | | | | | | 14 | | | |
| | 34 | 1-11-63 | | 13 | | | | | | | | 15 | | | |
| | 35 | 4-15-63 | | 14 | | | | | | | | 15a | | | |
| | 36 | 10-22-62 | | 15 | | | | | | | | 16 | | | |
| | 37 | 6-14-63 | | 16 | | | | | | | | 17 | | | |
| | | | | 17 | | | | | | | | 17b | | | |
| | | | | 18 | | | | | | | | 18 | | | |
| | | | | 24 | | | | | | | | 24 | | | |
| | | | | 27 | | | | | | | | 27 | | | |
| | | | | 28 | | | | | | | | 29 | | | |
| | | | | 29 | | | | | | | | 31 | | | |
| | | | D | 30 | | | 6-1-62 | | | | | 35 | | | |
| | | | | | | | | | | | D | 36 | | | 8-17-62 |

# ACTIVE-CHANGED PAGE

| ACTIVE | | | CHANGED | | | | | ACTIVE | | | CHANGED | | | | |
|---|---|---|---|---|---|---|---|---|---|---|---|---|---|---|---|
| SECTION | PAGE | DATE | SECTION | PAGE REVISED | PAGE ADDED | PAGE DELETED | DATE | SECTION | PAGE | DATE | SECTION | PAGE REVISED | PAGE ADDED | PAGE DELETED | DATE |
| | | | D | 2 | 2a | | 9-14-62 | | | | D | 2 | | | 4-15-63 |
| | | | | 11a | | | | | | | | 2a | | | |
| | | | | 14 | | | | | | | | 14 | | | |
| | | | | 16 | | | | | | | | 16 | | | |
| | | | | 17 | | | | | | | | 17 | | | |
| | | | | 17a | | | | | | | | 17b | | | |
| | | | | 17b | | | | | | | | 33 | | | |
| | | | | 29 | | | | | | | | 35 | | | |
| | | | D | 32 | | | 9-14-62 | | | | | 37 | | | |
| | | | | | | | | | | | D | | | | 4-15-63 |
| | | | D | 2 | | | 10-22-62 | | | | D | 2 | | | 6-14-63 |
| | | | | 2a | | | | | | | | 2a | | | |
| | | | | 4 | | | | | | | | 16 | | | |
| | | | | 9 | | | | | | | | 17a | | | |
| | | | | 15 | | | | | | | | 17b | | | |
| | | | | 15a | | | | | | | | 28 | | | |
| | | | | 16 | | | | | | | | 37 | | | |
| | | | | 17 | | | | | | | D | | | | 6-14-63 |
| | | | | 17a | | | | | | | | | | | |
| | | | | 27 | | | | | | | | | | | |
| | | | | 28 | | | | | | | | | | | |
| | | | | 29 | | | | | | | | | | | |
| | | | | 32 | | | | | | | | | | | |
| | | | | 35 | | | | | | | | | | | |
| | | | | 36 | | | | | | | | | | | |
| | | | | 37 | | | | | | | | | | | |
| | | | D | | | | 10-22-62 | | | | | | | | |
| | | | D | 2 | | | 11-26-62 | | | | | | | | |
| | | | D | 2a | | | 11-26-62 | | | | | | | | |
| | | | D | 24 | | | 11-26-62 | | | | | | | | |
| | | | D | 2 | | | 1-11-63 | | | | | | | | |
| | | | | 2a | | | | | | | | | | | |
| | | | | 9 | | | | | | | | | | | |
| | | | | 11a | | | | | | | | | | | |
| | | | | 17 | | | | | | | | | | | |
| | | | | 17b | | | | | | | | | | | |
| | | | | 27 | | | | | | | | | | | |
| | | | | 34 | | | | | | | | | | | |
| | | | | 35 | | | | | | | | | | | |
| | | | D | | | | 1-11-63 | | | | | | | | |

See revision description page, preceding Document Table of Contents

REVISED 6-18-63



U3 4280 1000 (WAS BAC 4131 C)

| ASSEMBLY OR CHECKOUT FUNCTION AND TECHNICAL REQUIREMENTS | RECOMMENDED EQUIPMENT OR DOCUMENT |
|---|---|
| 1.1 PERFORM ON-SITE MAINTENANCE (CONT) | |
| C. 7. Hoist, Lever, (Come-Along) (ACO 450) | Mfr's Manual |
| 8. Puller, Printed Circuit Remover (ACO 3009) | |
| 9. Lead, Electrical Ground (ACO 352) | |
| 10. Reservoir (ACO 769) | Mfr's Manual |
| 11. Work Table, Electronic Test (ACO 456) | Mfr's Manual |
| 12. Jack, Leveling Support (ACO 415) | Mfr's Manual |
| 13. ~~Positioning Set, Carriage, Rocket Motor (FSE 7691)~~ | ~~D2-9555 25-32273~~ |
| 14. Fixture, Test - Ordnance Device (FSE 7678) | |
| 15. Adapter, Joining-Missile Interstage I-II (FSE 7613) | D2-10929 |
| 16. Adapter Flow (G&C) Umbilical (ACO 200) | |
| 17. Fixture, Support Umbilical Cabling, MAB (FSE 7619) | D2-10905 |
| 18. Simulators, Airborne Components, Missile Test (FSE 7695) | D2-13848 |
| 19. Scaffolding - Missile Access (FSE 7630) | D2-10903 |
| 20. Adapter, Joining NCU Stage I (FSE 7701) | D2-10945 D2-10960 |
| 21. Adapter, Joining NCU Stage II (FSE 7702) | D2-10937 D2-10964 |
| 22. Adapter, Joining NCU Stage III (FSE 7703) | D2-10947 |
| 23. Dolly, Positioning - G&C Section (FSE 7707) | D2-10935 |
| 24. Dolly, Positioning - Final Assembly (FSE 7708) | D2-10927 |
| 25. Joining Dolly - Skirt to Engine (FSE 7709) | D2-10931 |
| 26. Cable Assembly NCU Test (FSE 7719) | |
| 27. Cable Assembly Equip. Interconnecting MAB (FSE 7718) | |
| 28. Cable Assembly Umbilical MAB (FSE 7720) | |

FUNCTION D1.1

| ASSEMBLY OR CHECKOUT FUNCTION AND TECHNICAL REQUIREMENTS | RECOMMENDED EQUIPMENT OR DOCUMENT |
|---|---|
| 1.1 C. (Continued) | |
| 50. Microscope (ACO 315) | |
| 51. Alarm Set Charging Cable (FSE 7750) | |
| 52. Cable Assemblies, Power, C91-C90 Test Position (FSE 7736) | |
| 53. Junction Box, Auxiliary, MAB (FSE 7739) | |
| 54. Hose Assembly, Cooling G&C Section (FSE 7741) | |
| 55. Cable Assemblies, Interconnecting, NCU Linkage Adjustment, CPA (FSE 7742) | |
| 56. Distribution Box, NCU Linkage Adjustment, CPA (FSE 7743) | |
| 57. Test Adapter Cable, Stage I, NCU, Model P70B (FSE 7748) | |
| 58. Lead, Assy. Electrical/(Missile Bonding Test) (ACO 4662) | |
| 59. Set, Connector (ACO 267) | |
| 60. Manometer, Inclined (ACO 308) | |
| 61. Cable Assembly, Power Electrical, Portable Flood Lamps (ACO 449) | |
| 62. Container, Raceway Cables, Stage III (ACO 457) | |
| 63. Container, Raceway Cables, Stage II (ACO 458) | |
| 64. Container, Raceway Cables, Stage I (ACO 459) | |
| 65. Kit, Module Connection Alignment (ACO 0583) | |
| 66. G&C End Cover (FSE 7600) | D2-11081 (O&M) |
| 67. Stop Watch (ACO 3059) | |

FUNCTION D1.1

| ASSEMBLY OR CHECKOUT FUNCTION AND TECHNICAL REQUIREMENTS | RECOMMENDED EQUIPMENT OR DOCUMENT |
|---|---|
| 1.1 C. (Continued) | |
| 68. Adapter, Spanner Wrench (ACO 3119) | |
| 69. Wrench, Safing Pin Installation and Removal (ACO 4047) | |
| 70. Test Tool - Explosive Set Circuit Test Set (ACO 935) | Mfr's Manual |
| 71. Wrench Portable Electric (ACO 4524) | |
| 72. Self Test Unit (C91) (ACO ) | |
| 73. Decade Resistor (ACO 4368) | Mfr's Manual |
| 74. Decade Resistor (ACO 907) | Mfr's Manual |
| 75. Stop, Railcar Wheel (ACO 4525) | |
| 76. Impaler Missile/Motor (FSE 7789) | 63TOGD199 |
| 77. Chart, EIA, Resolution (Initial Retma Linearity Chart) (ACO 330) | |
| 78. Shelving Storage (ACO 462) | |

SECTION D - REQUIRED PROCEDURE DOCUMENTS

| Doc. No. | Title |
|---|---|
| D2-10903 | Operation and Maintenance - Scaffolding - Missile Access |
| D2-10905 | Operation and Maintenance-Fixture, Support Umbilical Cabling, MAB |
| D2-10907 | Operation and Maintenance-Rails & Storage, Engine and Missile |
| D2-10908 | Functional Acceptance - Rails, Storage-Engine and Missile |
| D2-10922 | Operation and Maintenance-Dolly, Joining Amplifier NCU, Stage III |
| D2-10925 | Operation and Maintenance-Control-Winch, MAB & Storage Bunker |
| D2-10926 | Functional Acceptance - Bridle Rocket Motor, Stage I |
| D2-10927 | Operation and Maintenance-Dolly, Positioning-Final Assembly |
| D2-10929 | Operation and Maintenance-Adapter, Joining-Interstage I-II |
| D2-10931 | Operation and Maintenance-Dolly, Joining-Skirt to Engine |
| D2-10933 | Operating and Maintenance-Bridle-Rocket Motor Stage I |
| D2-10934 | Functional Acceptance - Bridle Rocket Motor, Stage III |
| D2-10935 | Operation and Maintenance-Dolly, Positioning-G&C Section |
| D2-10937 | Operation and Maintenance - Adapter, Joining NCU Stage II |
| D2-10939 | Operating and Maintenance-Bridle - Rocket Motor, Stage III |
| D2-10945 | Operation and Maintenance-Adapter, Joining NCU Stage I |
| D2-10941 | Operation and Maintenance-Bridle, Carriage 1st Stage (Rocket Motor Truck) |

SECTION D - REQUIRED EQUIPMENT

The following items are required for equipment maintenance:

1. Test Group, Ground Electronic System, C-90 (ACO 0623)
2. Test Fixture, Drawer Tester, Missile Checkout Console (FSE 7781)
3. Puller, Printed Circuit Remover (ACO 3009)
4. Test Set, Programming, C-91 (ACO 0624)
5. Test Set Cooler, Liquid, Guidance Section (ACO 3035)
6. Kit, Functional Test and Fault Isolation for C89 Test Adapter (ACO 10715)
7. Kit, Functional Test and Fault Isolation for C90 Test Adapter (ACO 10716)
8. Kit, Functional Test and Fault Isolation for C91P Programmer - Fault Location Test Center (ACO 10717)
9. Kit, Module Connection Alignment (ACO 0583)
10. ~~[illegible]~~
11. Extender, Circuit Card, Universal (ACO 285)

SECTION D - REQUIRED DRAWINGS

| | |
|---|---|
| 25-28581 | Maintenance Procedures for Translating Jacks |
| 25-27632 | Functional Acceptance-Clamp Assembly-Missile Transfer |
| 25-27486 | Functional Acceptance-Alignment Set - Missile Transfer |
| ~~25-32273~~ | ~~Maintenance Procedures for Carriage Positioning Set~~ |
| ~~25-34559~~ | ~~Maintenance Information for Simulators~~ |
| 25-17299 | Rail Assembly - Bridge Motor Transfer |
| 25-29338 | Junction Box, Test MAB |
| 25-29553 | Shipping and Storage Container Ballistic Missile |
| 29-21442 | Ordnance Cable - Test Box |
| 29-26786 | Dummy Load Re-Entry Vehicle |
| 63TOGD199 | Impaler, Missile/Motor |

# ACTIVE-CHANGED PAGE

| ACTIVE | | | CHANGED | | | | | ACTIVE | | | CHANGED | | | | |
|---|---|---|---|---|---|---|---|---|---|---|---|---|---|---|---|
| SECTION | PAGE | DATE | SECTION | PAGE REVISED | PAGE ADDED | PAGE DELETED | DATE | SECTION | PAGE | DATE | SECTION | PAGE REVISED | PAGE ADDED | PAGE DELETED | DATE |
| E | 1 | 11-15-61 | E | COMPLETE | | | 8-31-61 | | | | E | 2 | 20a | | 6-1-62 |
| | 2 | 6-14-63 | | REVISION | | | | | | | | 4 | 20b | | |
| | 2a | 6-14-63 | | | | | | | | | | 4a | 23a | | |
| | 3 | 6-1-62 | | | | | | | | | | 10 | | | |
| | 4 | 6-1-62 | E | | 4a | | 3-31-61 | | | | | 11 | | | |
| | 4a | 6-1-62 | E | COMPLETE | | | 11-15-61 | | | | | 12 | | | |
| | 5 | 11-15-61 | | REVISION | | | | | | | | 13 | | | |
| | 6 | | | | | | | | | | | 15 | | | |
| | 7 | 11-15-61 | | | 14 | | | | | | | 16 | | | |
| | 8 | 9-19-62 | | | 15 | | | | | | | 17 | | | |
| | 9 | 11-15-61 | | | 16 | | | | | | | 18 | | | |
| | 10 | 6-1-62 | | | 17 | | | | | | | 19 | | | |
| | 11 | 6-1-62 | | | 18 | | | | | | | 20 | | | |
| | 12 | 10-22-62 | | | 19 | | | | | | | 21 | | | |
| | 13 | 6-1-62 | | | 20 | | | | | | | 22 | | | |
| | 14 | 2-1-62 | | | 21 | | | | | | | 23 | | | |
| | 15 | 1-11-63 | | | 22 | | | | | | | 24 | | | |
| | 16 | 6-1-62 | | | 23 | | | | | | | 25 | | | |
| | 17 | 9-19-62 | | | 24 | | | | | | | 26 | | | |
| | 18 | 9-19-62 | | | 25 | | | | | | | 28 | | | |
| | 19 | 10-22-62 | | | 26 | | | | | | E | 29 | | | 6-1-62 |
| | 20 | 6-14-63 | | | 27 | | | | | | E | 2 | | | 7-13-62 |
| | 20a | 1-11-63 | E | | 28 | | 11-15-61 | | | | | 15 | | | |
| | 20b | 10-22-62 | E | 2 | 29 | | 2-1-62 | | | | | 17 | | | |
| | 21 | 1-11-63 | | 3 | | | | | | | | 19 | | | |
| | 22 | 8-17-62 | | 10 | | | | | | | | 20 | | | |
| | 23 | 6-14-63 | | 11 | | | | | | | | 23 | | | |
| | 23a | 6-14-63 | | 12 | | | | | | | | 25 | | | |
| | 24 | 1-11-63 | | 13 | | | | | | | | 26 | | | |
| | 25 | 10-22-62 | | 14 | | | | | | | E | 28 | | | 7-13-62 |
| | 26 | 1-11-63 | | 15 | | | | | | | E | 2 | | | 8-17-62 |
| | 27 | 2-1-62 | | 16 | | | | | | | | 8 | | | |
| | 28 | 10-22-62 | | 17 | | | | | | | | 11 | | | |
| E | 29 | 6-1-62 | | 18 | | | | | | | | 20 | | | |
| | | | | 19 | | | | | | | | 20a | | | |
| | | | | 20 | | | | | | | | 22 | | | |
| | | | | 21 | | | | | | | | 23 | | | |
| | | | | 22 | | | | | | | | 23a | | | |
| | | | | 23 | | | | | | | | 24 | | | |
| | | | | 24 | | | | | | | | 25 | | | |
| | | | | 25 | | | | | | | | 26 | | | |
| | | | | 26 | | | | | | | | | | | |
| | | | | 27 | | | | | | | | | | | |
| | | | E | 28 | | | 2-1-62 | | | | | | | | |

SEC

# ACTIVE-CHANGED PAGE

| ACTIVE | | | CHANGED | | | | | ACTIVE | | | CHANGED | | | | |
|---|---|---|---|---|---|---|---|---|---|---|---|---|---|---|---|
| SECTION | PAGE | DATE | SECTION | PAGE REVISED | PAGE ADDED | PAGE DELETED | DATE | SECTION | PAGE | DATE | SECTION | PAGE REVISED | PAGE ADDED | PAGE DELETED | DATE |
| | | | E | 2 | | | 9-14-62 | | | | | | | | |
| | | | | | 2a | | | | | | | | | | |
| | | | | 8 | | | | | | | | | | | |
| | | | | 17 | | | | | | | | | | | |
| | | | | 18 | | | | | | | | | | | |
| | | | | 19 | | | | | | | | | | | |
| | | | | 23 | | | | | | | | | | | |
| | | | E | 24 | | | 9-14-62 | | | | | | | | |
| | | | E | 2 | | | 10-22-62 | | | | | | | | |
| | | | | 2a | | | | | | | | | | | |
| | | | | 12 | | | | | | | | | | | |
| | | | | 19 | | | | | | | | | | | |
| | | | | 20 | | | | | | | | | | | |
| | | | | 20b | | | | | | | | | | | |
| | | | | 23 | | | | | | | | | | | |
| | | | | 25 | | | | | | | | | | | |
| | | | | 26 | | | | | | | | | | | |
| | | | E | 28 | | | 10-22-62 | | | | | | | | |
| | | | E | 2 | | | 11-26-62 | | | | | | | | |
| | | | | 2a | | | | | | | | | | | |
| | | | | 20 | | | | | | | | | | | |
| | | | | 21 | | | | | | | | | | | |
| | | | E | 23a | | | 11-26-62 | | | | | | | | |
| | | | E | 2 | | | 1-11-63 | | | | | | | | |
| | | | | 2a | | | | | | | | | | | |
| | | | | 15 | | | | | | | | | | | |
| | | | | 20a | | | | | | | | | | | |
| | | | | 21 | | | | | | | | | | | |
| | | | | 23 | | | | | | | | | | | |
| | | | | 23a | | | | | | | | | | | |
| | | | | 24 | | | | | | | | | | | |
| | | | | 26 | | | | | | | | | | | |
| | | | E | | | | 1-11-63 | | | | | | | | |
| | | | E | 2 | | | 6-14-63 | | | | | | | | |
| | | | | 2a | | | | | | | | | | | |
| | | | | 20 | | | | | | | | | | | |
| | | | | 23 | | | | | | | | | | | |
| | | | | 23a | | | | | | | | | | | |
| | | | E | | | | 6-14-63 | | | | | | | | |

See revision description page, preceding Document Table of Contents

REVISED 6-14-63

U3 4288 1000 (WAS BAC 4131 C)

| ASSEMBLY OR CHECKOUT FUNCTION AND TECHNICAL REQUIREMENTS | RECOMMENDED EQUIPMENT OR DOCUMENT |
|---|---|
| 1.4.1.2 PERFORM ROCKET MOTOR REPAIR (Cont.) | |
| c. Repair minor cracks, crazes, or chips in the base external insulation on Stage I and Stage II. | Kit, Base-Insulation Repair, Stage II (FSE 30) |
| d. On Stage II and III Rocket Motors remove and replace damaged nozzle insulation zipper cover or boot. | Kit, Base-Insulation Repair, Stage I (FSE 133) D2-12368 |
| e. On Stage II motor only, remove and replace raceway retaining pins, bushings, or adapter keys. | Kit, Base-Insulation Repair, Stage III (FSE 236) D2-11775 |
| f. Should it be determined during normal inspection that a nozzle is stuck or extremely difficult to actuate, perform a nozzle deflection and torque test to determine acceptability of motor for assembly. | Indicator, Nozzle Deflection and Torque, Stage I (FSE 123) Indicator, Nozzle Deflection and Torque, Stage II (FSE 15) Tester, Nozzle Deflection and Torque, Stage III (FSE 202) D2-12365 (Stage I) D2-11772 (Stage III) D2-12208 (Stage II) |
| g. Straighten bent raceway brackets. | |
| NOTE: Should it become necessary to return a rocket motor to the Associate Contractor as a result of being subjected to excessive environment, insulation damage beyond A/F Plant 77 repair capability, or damage requiring Associate Contractor Repair; the horizontal restraint rings shall be replaced on the rocket motor prior to loading in the appropriate highway transporter for return delivery to the Associate Contractor Facility. | |
| Pulley Bracket Assembly (FSE 7760) | See Equipment List at left |
| Sling, Horizontal Restraint Ring, Motor Stage I, II, III (FSE 7632) | |
| Horizontal Restraint Motor, 2nd Stage (FSE 7764) | |
| Horizontal Restraint Motor, 1st Stage (FSE 7763) | |
| Horizontal Restraint Motor, 3rd Stage (FSE 7765) | D2-9555 |
| Bridle, Carriage 1st Stage Rocket Motor Truck (FSE 7745) | D2-10941 (O&M) |
| Winch Portable-Rocket Motor Transfer (FSE 7653)(Optional) | (Option 1) |

MISSILE ASSEMBLY & CHECKOUT EQUIPMENT

| IDENT. NO. | NOMENCLATURE | CLASS | LOCATION & FUNCTION NUMBER | | | | | |
|---|---|---|---|---|---|---|---|---|
| | | | CPA | MAB | ORDNANCE PROCESSING | MISSILE & Motor STORAGE | MISSILE TRANSFER AREA | MISC |
| P/N T416090 | Turnbuckle, YZCGable | FSE | | E1.4.1.2 | | | | |
| 30 | Repair Kit, Base External Insulation, Stage II | FSE | | E1.4.1.2 | | | | |
| 114 | Spreader Assy, Nozzle | FSE | | E1.4.1.2 | | | | |
| 201 | Kit, Installation & Removal, Ordnance Device (Stage III) | FSE | | E1.4.1.2 | | | | |
| Part of 0622 | Junction Box (CPA) NCU Test | ACO | E1.3.2.1 | | | | | |
| 7632 | Sling Horizontal Restraint Ring Motor, Stage I, II, III | FSE | | E1.4.1.2 | | | | |
| 7653 | Winch, Portable-Rocket Motor Transfer | FSE | | | | E1.4.1.2 | | |
| 7683 | Distribution Box, NCU Test, CPA | FSE | E1.3.2.1 | | | | | |
| 7695 | Simulators, Airborne Components, Missile Test | FSE | | E1.3.1 | | | | |
| 7715 | Adapter Cables, Test Set, Raceway Cables | FSE | E1.3.2.1 | | | | | |
| 7726 | Cable Assembly, Interconnecting, G&C Test Position | FSE | E1.3.2.1 | | | | | |
| 7727 | Cable Assembly, Interconnecting, NCU Test Position | FSE | E1.3.2.1 | | | | | |
| 7728 | Power Supply Group, G&C Test, CPA | FSE | E1.3.2.1 | | | | | |

MISSILE ASSEMBLY & CHECKOUT EQUIPMENT

| IDENT. NO. | NOMENCLATURE | CLASS | LOCATION & FUNCTION NUMBER | | | | | |
|---|---|---|---|---|---|---|---|---|
| | | | CPA | MAB | ORDNANCE PROCESSING | MISSILE & Motor STORAGE | MISSILE TRANSFER AREA | MISC |
| 7729 | Power Supply Group, NCU Test, CPA | FSE | E1.3.2.1 | | | | | |
| 7741 | Hose Assembly, Cooling, G&C Section | FSE | E1.3.2.1 | | | | | |
| 7745 | Bridle, Carriage 1st Stage (Rocket Motor Truck) | FSE | | | | E1.4.1.2 | | |
| 7748 | Test Adapter Stage I, Model P70B | FSE | | E1.3.2.1 | | | | |
| 7760 | Pulley Bracket Assy. | FSE | | | | E1.4.1.2 | | |
| 7763 | Horizontal Restraint-Motor, First Stage | FSE | | E1.4.1.2 | | | | |
| 7764 | Horizontal Restraint-Motor, 2nd Stage | FSE | | E1.4.1.2 | | | | |
| 7765 | Horizontal Restraint-Motor, 3rd Stage | FSE | | E1.4.1.2 | | | | |
| 10163 | Gage, Nozzle Alignment, Stage I | FSE | | E1.4.1.2 | | | | |
| 10165 | Gage, Nozzle Alignment, Stage II | FSE | | E1.4.1.2 | | | | |
| 10167 | Gage, Nozzle Alignment, Stage III | FSE | | E1.4.1.2 | | | | |
| 12009(A) 12010(B) | Program Tapes, NCU Test | FSE | E1.3.2.2 | | | | | |
| 12011(A) 12012(B) | Program Tapes, Accelerometer Test | FSE | E1.3.2.2 | | | | | |
| 12013 | Missile Checkout Console NS10 Tape Model A | FSE | E1.3.2.2 | | | | | |
| 12014 | Missile Checkout Cons.NS10 Tape,Mod.B | FSE | E1.3.2.2 | | | | | |

# ACTIVE-CHANGED PAGE

| ACTIVE | | | CHANGED | | | | | ACTIVE | | | CHANGED | | | | |
|---|---|---|---|---|---|---|---|---|---|---|---|---|---|---|---|
| SECTION | PAGE | DATE | SECTION | PAGE REVISED | PAGE ADDED | PAGE DELETED | DATE | SECTION | PAGE | DATE | SECTION | PAGE REVISED | PAGE ADDED | PAGE DELETED | DATE |
| APP I | 1 | 11-15-61 | APP I | COMPLETE | | | 11-15-61 | APP I | 43 | 11-15-61 | APP I | 53d | | | 7-13-62 |
| | 2 | 6-14-63 | | REVISION | | | | | 44 | 6-1-62 | | 53d-1 | | | |
| | 3 | 6-14-63 | | | 91 | 29a | | | 45 | 10-22-61 | | 53d-2 | | | |
| | 4 | 8-17-62 | | | | 37a | | | 46 | 10-22-62 | | 53d-3 | | | |
| | 5 | 11-15-61 | | | | 43a | | | 47 | 2-1-62 | | 53d-4 | | | |
| | 6 | 11-15-61 | | | | | | | 48 | 11-15-61 | | 53d-5 | | | |
| | 7 | 11-15-61 | APP I | | 109 | | 11-15-61 | | 49 | | | 53d-6 | | | |
| | 8 | DELETED | | | | | | | 50 | | APP I | | 53d-7 | | 7-13-62 |
| | 9 | DELETED | APP I | 2 | 53a | 109 | 2-1-62 | | 51 | | | 2 | | | 8-17-62 |
| | 10 | 11-15-61 | | 3 | 53b | | | | 52 | 11-15-61 | | 3 | | | |
| | 11 | 11-15-61 | | 12 | 53c | | | | 53 | 2-1-62 | | 4 | | | |
| | 12 | 8-17-62 | | 15 | 53d | | | | 53a | DELETED | | 12 | | | |
| | 13 | 8-17-62 | | 16 | 53e | | | | 53b | DELETED | | 13 | | | |
| | 14 | 11-15-61 | | 17 | 53f | | | | 53c | DELETED | | 53 | | | |
| | 15 | 2-1-62 | | 18 | 53g | | | | 53d | 4-15-63 | | 53 | | | |
| | 16 | 2-1-62 | | 25 | 96a | | | | 53d-1 | | | 6a | | | |
| | 17 | 2-1-62 | | 29 | 96b | | | | 53d-2 | | | 6 | | | |
| | 18 | 2-1-62 | | 31 | 96c | | | | 53d-3 | | | c | | | |
| | 19 | 11-15-61 | | 37 | | | | | 53d-4 | | | | 109 | | |
| | 20 | | | 43 | | | | | 53d-5 | | | | 110 | | |
| | 21 | | | 44 | | | | | 53d-6 | 4-15-63 | | | 111 | | |
| | 22 | | | 46 | | | | | 53d-7 | DELETED | APP I | | 112 | | 8-17-62 |
| | 23 | | | 47 | | | | | 53e | 1-11-63 | | 2 | | 8 | 9-14-62 |
| | 24 | 11-15-61 | | 64 | | | | | 53f | 1-11-63 | APP I | | | 9 | |
| | 25 | 2-1-62 | | 74 | | | | | 53g | DELETED | | 53d | | 53a | |
| | 26 | 11-15-61 | | 77 | | | | | 54 | 11-15-61 | | 53d-1 | | 53b | |
| | 27 | 2-1-62 | | 78 | | | | | 55 | | | 53d-2 | | 53c | |
| | 28 | 11-15-61 | | 80 | | | | | 56 | | | 53d-3 | | 58 | |
| | 29 | 2-1-62 | | 82 | | | | | 57 | 11-15-61 | | 53d-4 | | 59 | |
| | 30 | 11-15-61 | | 83 | | | | | 58 | 10-22-62 | | 53d-5 | | | |
| | 31 | 2-1-62 | | 84 | | | | | 59 | 10-22-62 | | 53d-6 | | | |
| | 32 | 11-15-61 | | 85 | | | | | 60 | 11-15-61 | APP I | | 53d-7 | | 9-14-62 |
| | 33 | 11-15-61 | | 86 | | | | | 61 | | APP I | 2 | | | 10-22-62 |
| | 34 | 6-1-62 | | 87 | | | | | 62 | | | 3 | | | |
| | 35 | 11-15-62 | APP I | 90 | | | 2-1-62 | | 63 | 11-15-61 | | 38 | | | |
| | 36 | 11-15-61 | | 93 | | | | | 64 | 2-1-62 | | 39 | | | |
| | 37 | 1-11-63 | | 94 | | | | | 65 | 11-15-61 | | 45 | | | |
| | 38 | 10-22-61 | | 107 | | | | | 66 | | | 46 | | | |
| | 39 | 10-22-62 | | 108 | | | | | 67 | | | | 58 | | |
| | 40 | 2-1-62 | APP I | 2 | 53d-1 | | 6-1-62 | | 68 | | | | 59 | | |
| | 41 | 11-15-61 | | 3 | 53d-2 | | | | 69 | 11-15-61 | | | 96a | | |
| | 42 | 11-15-61 | | 34 | 53d-3 | | | | 70 | 4-15-63 | | | 96b | | |
| | | | | 44 | 53d-4 | | | | 71 | 6-14-63 | | | 113 | | |
| | | | | 53 | 53d-5 | | | | 71a | 6-14-63 | | | 114 | | |
| | | | | 53d | 53d-6 | | | | | | | | 115 | | |
| | | | | 53e | 96d | | | | | | | | 116 | | |
| | | | | 53f | | | | | | | | | 117 | | |
| | | | | 96a | | | | | | | | | 118 | | 10-22-62 |
| | | | APP I | 96b | | | 6-1-62 | | | | | | | | |

▷ See revision description page, preceding Document Table of Contents

REVISED 6-14-63



U3 4288 1000 (WAS BAC 4131 C)

# ACTIVE-CHANGED PAGE

| ACTIVE | | | CHANGED | | | | | ACTIVE | | | CHANGED | | | | |
|---|---|---|---|---|---|---|---|---|---|---|---|---|---|---|---|
| | | | | PAGE | | | | | | | | PAGE | | | |
| SECTION | PAGE | DATE | SECTION | REVISED | ADDED | DELETED | DATE | SECTION | PAGE | DATE | SECTION | REVISED | ADDED | DELETED | DATE |
| APP I | 72 | 6-14-63 | APP I | 2 | | | 11-26-62 | APP I | 109 | 8-17-62 | | | | | |
| | 73 | 6-14-63 | | 3 | | 53g | | | 110 | 8-17-62 | | | | | |
| | 74 | 2-1-62 | | | 119 | | | | 111 | 8-17-62 | | | | | |
| | 75 | 11-15-61 | | | 120 | | | | 112 | 8-17-62 | | | | | |
| | 76 | 11-15-61 | APP I | | | | 11-26-62 | | 113 | 6-14-63 | | | | | |
| | 77 | 1-11-63 | APP I | 2 | | | 1-11-63 | | 114 | DELETED | | | | | |
| | 78 | 2-1-62 | | 3 | | | | | 115 | 6-14-63 | | | | | |
| | 79 | 11-15-61 | | 37 | | | | | 116 | 6-14-63 | | | | | |
| | 80 | 2-1-62 | | | | | | | 117 | 6-14-63 | | | | | |
| | 81 | 11-15-61 | | 53e | | | | APP I | 118 | 6-14-63 | | | | | |
| | 82 | 2-1-62 | | 53f | | | | | 119 | 11-26-62 | | | | | |
| | 83 | | | 77 | | | | | 120 | 11-26-62 | | | | | |
| | 84 | | | 113 | | | | | 121 | 6-14-63 | | | | | |
| | 85 | | APP I | 115 | | | 1-11-63 | | | | | | | | |
| | 86 | | | | | | | | | | | | | | |
| | 87 | 2-1-62 | APP I | 2 | | | 4-15-63 | | | | | | | | |
| | 88 | 11-15-61 | | 3 | | | | | | | | | | | |
| | 89 | 11-15-61 | | 53d | | | | | | | | | | | |
| | 90 | 2-1-62 | | 53d-1 | | | | | | | | | | | |
| | 91 | 11-15-61 | | 53d-2 | | | | | | | | | | | |
| | 92 | 11-15-61 | | 53d-3 | | | | | | | | | | | |
| | 93 | 2-1-62 | | 53d-4 | | | | | | | | | | | |
| | 94 | 2-1-62 | APP I | 53d-5 | | | 4-15-63 | | | | | | | | |
| | 95 | 11-15-61 | APP I | 2 | | | 6-14-63 | | | | | | | | |
| | 96 | 11-15-61 | | 3 | | | | | | | | | | | |
| | 96a | 6-14-63 | | | | | | | | | | | | | |
| | 96b | 6-14-63 | | | | | | | | | | | | | |
| | 96c | 6-14-63 | | 71 | | | | | | | | | | | |
| | 96d | 6-1-62 | | | 71a | | | | | | | | | | |
| | 96e | 10-22-62 | | 72 | | | | | | | | | | | |
| | 96f | 10-22-62 | | 73 | | | | | | | | | | | |
| | 97 | 11-15-61 | | | | | | | | | | | | | |
| | 98 | | | 96a | | | | | | | | | | | |
| | 99 | | | 96b | | | | | | | | | | | |
| | 100 | | | 96c | | | | | | | | | | | |
| | 101 | | | 113 | | | | | | | | | | | |
| | 102 | | | | | 114 | | | | | | | | | |
| | 103 | | | 115 | | | | | | | | | | | |
| | 104 | | | 116 | | | | | | | | | | | |
| | 105 | | | 117 | | | | | | | | | | | |
| | 106 | 11-15-61 | | 118 | | | | | | | | | | | |
| APP I | 107 | 2-1-62 | APP I | | | | 6-14-63 | | | | | | | | |
| | 108 | 2-1-62 | | | 121 | | | | | | | | | | |

See revision description page, preceding Document Table of Contents

REVISED 6-14-63

| TYPE OF LIST | DATE 3-15-61 |
|---|---|
| Model Designation and Name of End Item SM-80 WEAPON SYSTEM | Revision No. and Date B |

Contractor
BOEING

Contract No.
AF04(647)-580

Item No.
7720

Nomenclature
CABLE ASSEMBLIES, UMBILICAL, MAB

Quantity

Total On Order

Estimated Production Lead Time

List Number

Manufacturer's Part Number 26-12081-3 B

Specification No.

Specification Date

Description

FUNCTION

1. A requirement exists to provide electrical connection between the junction box and the Missile Skirt Connector and the G&C Section and coolant transmission between the Ground G&C Cooling Unit and the Missile G&C Section.
   (a) provide a straight thru adapter at the Skirt Umbilical Connector to shunt pins 34 and 38 B
   (b) Sections in D2-11162 requiring this capability are: B6.1, B8.1, B8.2 and B12.1

Sheet 1 of 3

Form 2-2052-100-14

DESCRIPTION

1. Cable assemblies provide connection of:

   (a) test "J" box to Missile Skirt Connector.

   (b) an Adapter which will mate with the Missile Skirt Umbilical Connector and the MAB Umbilical Cable Connector and shunt pins 34 and 38.

   (c) Ground Cooling Unit to the G&C Section.

Sheet 2 of 3

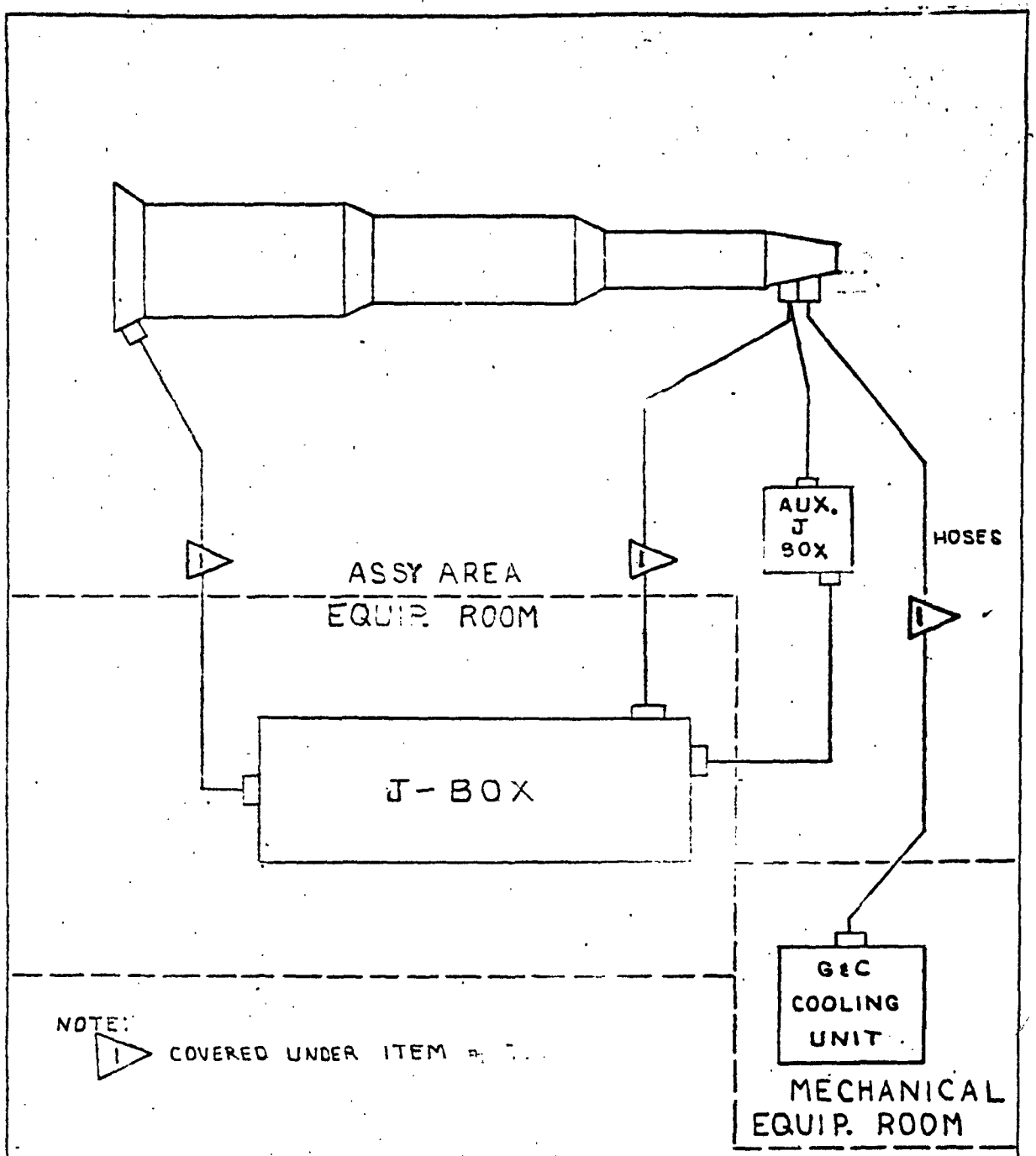


NOTE:
1 COVERED UNDER ITEM [illegible]

DIAGRAM SHOWING
UMBILICAL CABLE ASSEMBLIES
FSE 7720

Sheet 3 of 3

U3-4071-1000 (was BAC 1546-L-R3)

6-14-63

| TYPE OF LIST | DATE |
|---|---|
| FACTORY SUPPORT EQUIPMENT | 3-15-61 |
| Model Designation and Name of End Item. H&D SM-80 WEAPON SYSTEM | Revision No. and Date 8-4-61 |

Contractor
BOEING

Contract No.
AF04(647)-580

Item No.
7721

Nomenclature
Junction Box, Test, MAB

Quantity

Total On Order

Estimated Production Lead Time

List Number

Manufacturer's Part Number 25-27518

Specification No.

Specification Date

Description
Function

1. A requirement exists for a junction box between test equipment and missile components in the MAB.

2. Functions in D2-11162 requiring this capability are: B6.1, B8.1, B8.2, B10.1, B12.1

Description
The junction box provides a means for interconnecting the cable assemblies in the MAB. The design of the junction box is such that it is used specifically for the missile test area. The following cable assemblies are connected to the box; Equipment Interconnecting Cable Assemblies, MRCN 7718; NCU Test Cable Assembly, MRCN 7719; Umbilical Cable Assembly MRCN 7720.
For detail design requirements see document D2-10125.

Form 2-2052-100-14

DEPT. RESP. - Engineering

| ENGINEERING | BASE INSTALLATIONS | MANUFACTURING |
|---|---|---|
| | | |

R

6-14-63

698

| TYPE OF LIST | DATE |
|---|---|
| FACTORY SUPPORT EQUIPMENT | 12-12-61 |
| Model Designation and Name of End Item: H&D SM-80 WEAPON SYSTEM | Revision No. C and Date 7-6-62 |

Contractor
BOEING

Contract No.
AF04(647)-880

Item No.
7746

Nomenclature
SET, FAULT ISOLATION TOOLING

Quantity

Total On Order

Estimated Production Lead Time

List Number

Manufacturer's Part Number

Specification No.

Specification Date

CANCELLED

Description

Function

1. A requirement exists for a means to check both items of airborne equipment which interface during assembly or installation at Air Force Plant 77 to determine which does not meet the drawing requirements should a misfit occur during the missile assembly in the MAB. The means will be required to check only those interface dimensions which cannot be checked conveniently and accurately with conventional measuring devices and methods.

2. Functions in D2-11162 requiring this capability are: B7.0, B9.0, B11.0

Description - This set consists of a number of tools each of which will be used to check a particular interface of an item of airborne equipment.

Department Responsible: Engineering | Manufacturing: Basic Installations | Facilities | Manufacturing

Form 2-2052-100-14

Nomenclature: Set, Interchangeability-Replaceability Checking Fixture

Description: Continued

The list of interfaces to be checked by the tools are as follows:

Angular Accelerometer to Interstage II-III

Interstage II-III to Angular Accelerometer

First Stage Rocket Motor to Section 49 Skirt

First Stage Rocket Motor to Section 49 Skirt & Section 49 Skirt to First Stage Rocket Motor

First Stage Rocket Motor to Section 47 Interstage

First Stage Rocket Motor to Section 47 Interstage & Section 47 Interstage to First Stage Rocket Motor

Second Stage Rocket Motor to Section 47 Interstage

Second Stage Rocket Motor to Section 47 Interstage & Section 47 Interstage to Second Stage Rocket Motor

Second Stage Rocket Motor to Section 45 Interstage

Second Stage Rocket Motor to Section 45 Interstage & Section 45 Interstage to Second Stage Engine

Third Stage Rocket Motor to Section 45 Interstage

Third Stage Rocket Motor to Section 45 Interstage & Section 45 Interstage to Third Stage Rocket Motor

Third Stage Rocket Motor to Section 42 G&C

Third Stage Rocket Motor to Section 42 G&C & Section 42 G&C to Third Stage Rocket Motor

Heat Protection to NCU - First Stage & NCU to Heat Protection - First Stage

Heat Protection to NCU - Second Stage & NCU to Heat Protection - Second Stage

Heat Protection to NCU - Third Stage & NCU to Heat Protection - Third Stage

Interstage to frame to strut to heat deflector support Sec. 47

Interstage to frame to strut to heat deflector support Sec. 45

Guide G&C support structure to interstage Sec. 47

Guide G&C support structure to interstage Sec. 45

Required for Wing II only.

CANCELLED

FSE NO. 7746 Description (Continued)

NCU to First Stage Rocket Motor

First Stage Rocket Motor to NCU

NCU to Second Stage Rocket Motor

Second Stage Rocket Motor to NCU

NCU to Third Stage Rocket Motor

Third Stage Rocket Motor to NCU

Raceway Cap and Chute to Skirt

Skirt to Raceway Cap & Chute

Raceway Cap and Chute to Section 47 Aft

Section 47 Aft to Raceway Cap and Chute

Raceway Cap and Chute to Section 47 Fwd.

Section 47 Fwd. to Raceway Cap and Chute

Raceway Cap and Chute to Section 45 Aft

Section 45 Aft to Raceway Cap and Chute

Raceway Cap and Chute to Section 45 Fwd.

Section 45 Fwd. to Raceway Cap and Chute

Raceway Cap and Chute to 3rd Stage Rocket Motor

First Stage Engine to Raceway Cover

Raceway Cover to Second Stage Rocket Motor

Second Stage Rocket Motor to Raceway Cover

Raceway Cover to Third Stage Rocket Motor

Third Stage Rocket Motor to Raceway Cover

CANCELLED

For detailed description of the tools see Drawing 21-51991.

| TYPE OF LIST | DATE 9-18-62 |
|---|---|
| Model Designation and Name of End Item SM-80 WEAPON SYSTEM | Revision No. and Date A |
| Contractor | |
| Contract No. OOAMA | |
| Item No. 7789 | |
| Nomenclature IMPALER, MISSILE/MOTOR | |
| Quantity | |
| Total On Order | |
| Estimated Production Lead Time | |
| List Number | |
| Manufacturer's Part Number 63TOGD199 | |
| Specification No. | |
| Specification Date | |

Function

To provide containment of the missile or motors installed in Rocket Motor Carriages on the Missile Assembly Rails (MRCN 7628) in the Missile Assembly Building, or on the Missile/Motor Storage Rails (MRCN 7629) in the Missile/Motor Storage Building.

Description

The impaler consists of a motor puncturing device mounted on a frame which bolts to the rail support structure between the rails.

NOTE: This device is designed and built by OOAMA at Hill AFB, Ogden, Utah, and is provided to Plant 77 for their use.

Form 2-2052-100-14

| TYPE OF LIST | DATE |
|---|---|
| FACTORY SUPPORT EQUIPMENT | 9-18-62 |
| Model Designation and Name of End Item<br>H&D SM-80 WEAPON SYSTEM | Revision No. and Date A 9-18-62 |

Contractor
OOAMA

Contract No.

Item No.
7790

Nomenclature
Device - Restraint, 2nd Stage Rocket Motor

Quantity

Total On Order

Estimated Production Lead Time

List Number

Manufacturer's Part Number 62 K31128

Specification No.

Specification Date

CANCELLED

Description

Function:

1. A requirement exists for a means to restrain the 2nd stage rocket motor when located in its handling carriage on fixed rails.

2. The function in D2-11162 requiring this capability are: B2.2 B13.0

3. The functions in D2-11162-1 requiring this capability are: B2.2 B12.0

Description:

This device consists of a yoke which fits over the rocket motor and attaches to its carriage. Impaling knives are housed in containers

Form 2-2052-100-14

Department Responsible: Engineering, Basic Installations, Facilities, Manufacturing

REVISED

FACTORY SUPPORT EQUIPMENT

ITEM No. 7790

Nomenclature: Device - Restraint, 2nd Stage Rocket Motor

Description: (cont'd)

mounted on each side of the yoke and have cable lanyards which attach to the fixed rail support. Should the motor ignite, the forward thrust of the motor will cause the impalers to puncture the motor case and render the motor non-propulsive.

Note: This device is designed and built by OOAMA at Hill AFB, Ogden, Utah and is provided to Plant 77 for their use.

CANCELLED

| TYPE OF LIST | DATE |
|---|---|
| FACTORY SUPPORT EQUIPMENT | 9-18-62 |
| Model Designation and Name of End Item<br>H&D SM-80 WEAPON SYSTEM | Revision No. and Date |

Contractor

OOAMA

Contract No.

Item No.
7791

Nomenclature

Device - Restraint, 3rd Stage Rocket Motor

Quantity

Total On Order

Estimated Production Lead Time

List Number

Manufacturer's Part Number 62J 31129

Specification No.

Specification Date

CANCELLED

Description

Function:

1. A requirement exists for a means to restrain the 3rd stage rocket motor when located in its handling carriage on fixed rails.

2. The function in D2-11162 requiring this capability are: B2.2 B13.0

3. The functions in D2-11162-1 requiring this capability are: B2.2 B12.0

Description:

This device consists of a yoke which fits over the rocket motor and attaches to its carriage. Impaling knives are housed in containers

Form 2-2052-100-14

Department Responsible

Engineering

Basic Installations

Facilities

Manufacturing

REVISED

396



FACTORY SUPPORT EQUIPMENT

ITEM No. 7791

Nomenclature: Device - Restraint, 3rd Stage Rocket Motor

Description: (cont'd)

mounted on each side of the yoke and have cable lanyards which attach to the fixed rail support. Should the motor ignite, the forward thrust of the motor will cause the impalers to puncture the motor case and render the motor non-propulsive.

Note: This device is designed and built by OOAMA at Hill AFB, Ogden, Utah and is provided to Plant 77 for their use.

CANCELLED

| TYPE OF LIST | DATE |
|---|---|
| FACTORY SUPPORT EQUIPMENT | |
| Model Designation and Name of End Item: SM-80 WEAPON SYSTEM | Revision No. and Date: 3-1-3 |

**Contractor**

The Boeing Company

**Contract No.**

AF04(647)-580

**Item No.**

7794

**Nomenclature**

Spacer, Rail Ends, SSCBM, MAB and MSB

**Quantity**

**Total On Order**

**Estimated Production Lead Time**

**List Number**

**Manufacturer's Part Number** 29-29598

**Specification No.**

**Specification Date**

**Description**

Function:

1. Used to prevent deformation of rail end fittings of the SSCBM, MAB and MSB rails. They are to be used for every transfer, using the SSCBM, not requiring bridge rails.
2. Functions in D2-11162 requiring this capability are B4.2, B13.1, B13.2, B13.6 and B13.7.
3. Functions in D2-11162-1 requiring this capability are B4.2, B12.1, B12.2, B12.6 and B12.7.

Description:

A metal block to fit into the rail end fittings of the SSCBM, MAB and MSB.

Form 2-2052-100-14

Manufacturing | Facilities | Basic Installations | Responsible Engineering

REVISED 6-14-63

# ACTIVE-CHANGED PAGE

| ACTIVE SECTION | ACTIVE PAGE | ACTIVE DATE | CHANGED SECTION | CHANGED PAGE REVISED | CHANGED PAGE ADDED | CHANGED PAGE DELETED | CHANGED DATE |
|---|---|---|---|---|---|---|---|
| APP II | 1 | 11-15-61 | APP II | COMPLETE REVISION | | | 8-31-61 |
| | 2 | 6-14-63 | | | | | |
| | 3 | 2-1-62 | | | 36 | | |
| | 3a | 6-14-63 | | | 37 | | |
| | 3b | 6-1-62 | APP II | | 38 | | 8-31-61 |
| | 3c | | | | | | |
| | 3d | 6-1-62 | APP II | COMPLETE REVISION | | | 11-15-61 |
| | 4 | 2-1-62 | | | | | |
| | 5 | | | | 39 | | |
| | 6 | | | | | | |
| | 7 | | | | | | |
| | 8 | | | | | | |
| | 9 | | | | | | |
| | 10 | | APP II | | 61 | | 11-15-61 |
| | 11 | | | | | | |
| | 12 | | | | | | |
| | 13 | | APP II | 2 | | 60 | 2-1-62 |
| | 14 | | | 3 | | 61 | |
| | 15 | | | THRU | | | |
| | 16 | | | 49 | | | |
| | 17 | | | 51 | | | |
| | 18 | | | 52 | | | |
| | 19 | | | 54 | | | |
| | 20 | | | | | | |
| | 21 | | APP II | 56 | | | |
| | 22 | | | 57 | | | 2-1-62 |
| | 23 | | | | | | |
| | 24 | | APP II | 2 | 3a | 54 | 6-1-62 |
| | 25 | | | 31 | 3b | 55 | |
| | 26 | | | 32 | 3c | 56 | |
| | 27 | | | 33 | 3d | 57 | |
| | 28 | 2-1-62 | | 34 | 23a | 58 | |
| | 28a | 6-1-62 | | 35 | 31a | 59 | |
| | 29 | 2-1-62 | | 45 | 32a | | |
| | 30 | 2-1-62 | | 46 | 32b | | |
| | 31 | 6-1-62 | | 47 | 34a | | |
| | 31a | | | 48 | 34b | | |
| | 32 | | | 49 | 34c | | |
| | 32a | | | 50 | 34d | | |
| | 32b | | | 51 | 35a | | |
| | 33 | | | 52 | 35b | | |
| | 34 | | | 53 | 35c | | |
| | 34a | | | | 35d | | |
| | 34b | | | | 35e | | |
| | 34c | | | | 35f | | |
| | 34d | | | | 35g | | |
| | 35 | | | | 35h | | |
| | 35a | | | | 35i | | |
| | 35b | 6-1-62 | | | 35j | | 6-1-62 |
| | 35c | 8-17-62 | | | | | |
| | 35d | 8-17-62 | | | | | |
| | 35e | 6-1-62 | | | | | |
| APP II | 35f | 6-1-62 | | | | | |

| ACTIVE SECTION | ACTIVE PAGE | ACTIVE DATE | CHANGED SECTION | CHANGED PAGE REVISED | CHANGED PAGE ADDED | CHANGED PAGE DELETED | CHANGED DATE |
|---|---|---|---|---|---|---|---|
| APP II | 35f-1 | 1-11-63 | APP II | | 35k | | 6-1-62 |
| | 35g | 6-1-62 | | | 35l | | |
| | 35h | | | | 35m | | |
| | 35i | | | | 35n | | |
| | 35j | | | | 35o | | |
| | 35k | | | | 35p | | |
| | 35l | | | | 35q | | |
| | 35m | | | | 35r | | |
| | 35n | | | | 35s | | |
| | 35o | | | | 35t | | |
| | 35p | | | | 35u | | |
| | 35q | | | | 36a | | |
| | 35r | 6-1- | | | 36b | | |
| | 35r-1 | 8-17- | | | 36c | | |
| | 35r-2 | 9-14- | | | 36d | | |
| | 35r-3 | 9-14-62 | | | 36e | | |
| | 35r-4 | 1-11-63 | | | 36f | | |
| | 35r-5 | 1-11-63 | | | 36g | | |
| | 35r-6 | 1-11-63 | | | 39a | | |
| | 35r-7 | 1-11-63 | | | 41a | | |
| | 35s | 6-1-62 | | | 43a | | |
| | 35T | 6-1-62 | | | 43b | | |
| | 35u | 6-1-62 | | | 43c | | |
| | 36 | 2-1-62 | | | 43d | | |
| | 36a | 6-1-62 | | | 43e | | |
| | 36b | | | | 43f | | |
| | 36c | | APP II | | 43g | | 6-1-62 |
| | 36d | | | | | | |
| | 36e | | | | | | |
| | 36f | 6-1-62 | APP II | 2 | 35r-1 | | 7-13-62 |
| | 37 | 2-1-62 | | | | | |
| | 38 | 2-1-62 | APP II | 2 | | | 8-17-62 |
| | 39 | 2-1-62 | | 35c | | | |
| | 39a | 6-1-62 | APP II | 3-5d | 35r-2 | | 8-17-62 |
| | 40 | 2-1-62 | | 35r-1 | 35r-3 | | |
| | 41 | 2-1-62 | | | | | |
| | 41a | 6-1-62 | APP II | 2 | | | 9-14-62 |
| | 42 | 2-1-62 | | 35r-2 | | | |
| | 43 | 2-1-62 | APP II | 35r-3 | | | 9-14-62 |
| | 43a | 6-1-62 | | | | | |
| | 44 | 2-1-62 | APP II | 2 | 35f-1 | | 1-11-63 |
| | 45 | 6-1-62 | | | 35r-4 | | |
| | 46 | | | | 35r-5 | | |
| | 47 | | | | 35r-6 | | |
| | 48 | | | | 35r-7 | | |
| | 48a | | | | | | |
| | 48b | | | | | | |
| | 48c | 6-1-62 | APP II | | | | 1-11-63 |
| | 48d | 6-14-63 | | | | | |
| | 49 | 6-1-62 | APP II | 2 | | | 6-14-63 |
| | 50 | | | 3a | | | |
| | 51 | | | | | | |
| | 52 | 6-1-62 | APP II | | 48d | | 6-14-63 |
| | 53 | | | | | | |

See revision description page, preceding Document Table of Contents

REVISED 6-14-63

NOV 15 1961




03 4286 1000 (WAG) AD 4331 (2/61)

# WS 133A
# ASSEMBLY & CHECKOUT EQUIPMENT REQUIREMENTS

ACO NUMBER 253
APPROVAL DATE 4-13-62
REVISION _____ DATE _____

EQUIPMENT TITLE: Cable, Rocket Motor Bonding
(Basic Noun First)

RESPONSIBLE DEPT. BI-MM EQUIP. CLASSIFICATION SFC/OH
DESIGN RQMTS DOCUMENT None DWG NO. N. A
TO BE USED AT:

| BASE | MAFB | EAFB | VAFB | STP III | PLT 77 | | | |
|---|---|---|---|---|---|---|---|---|
| DOC | D2-7648 | D2-7648 | D2-7871 | D2-9942 | D2-11162 | | | |
| | | | | | X | | | |

PURPOSE & JUSTIFICATION:
A requirement exists to provide a means of electrically bonding the 1st, 2nd, and 3rd Stage Rocket Motor Carriages together to prevent an electrical potential difference between rocket motors when roll transferred in a train using Fig. A 7691.

DESCRIPTION, REQUIREMENTS & RECOMMENDATIONS:
It is recommended that an electrical bonding cable assembly with alligator clips be provided. The assembly shall consist of wire with a maximum resistance of 0.7 ohms per 1000 ft. at 20° C; this is equivalent to BMS 13-5D Type I, Class A, Size 8 wire.

(NOTE: This item may be fabricated locally from expendable materials. The item shall be fabricated per BAC process specifications.)

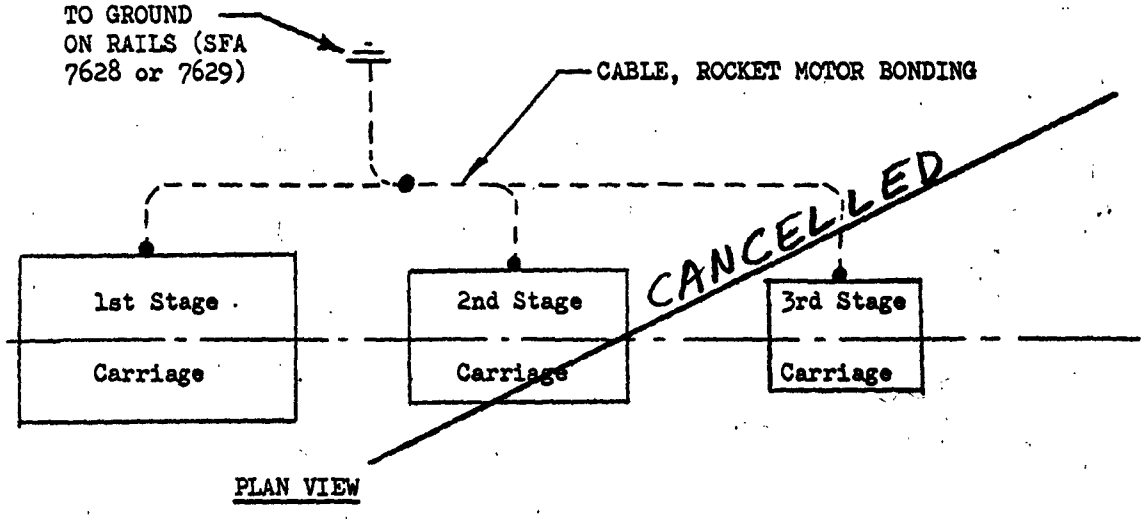


SHT. 1 OF 1

| ENGINEERING DEPT. | BASE INSTALLATION DEPT. | MANUFACTURING DEPT. |
|---|---|---|
| | | |

ORIGINATING GROUP SUPERVISOR: O. A. Severide
TELEPHONE: 5-5022

NOTE: Use form U3-4071-1000 if additional blocks are required.

2-6340-0-1 6-14-63
REV.

BOEING NO. D2-11162
App. II PAGE 3a

# WS 133A

## ASSEMBLY & CHECKOUT EQUIPMENT REQUIREMENTS

ACO NUMBER 4662

APPROVAL DATE 5-3-3

REVISION _____ DATE _____

EQUIPMENT TITLE Lead Assembly, Electrical
(Basic Noun First)

RESPONSIBLE DEPT. Engineering

EQUIP. CLASSIFICATION ACO/-MGE Peculiar

DESIGN REQMTS DOCUMENT _____

DWG NO. 29-30451

TO BE USED AT: This ACO Result of ECP 620

| BASE | MAFB | EAFB | VAFB | STP [illegible] | PLT 77 | | | |
|---|---|---|---|---|---|---|---|---|
| DOC | D2-7648 | D2-7648 | D2-7871 | D2-99[illegible]2 | D2-11162 | | | |
| | X | — | X | — | X | | | |

PURPOSE & JUSTIFICATION

To provide a means of connecting ACO 3007 (Test Set, Explosive Set Circuitry), in order to conduct static bonding tests immediately following assembly and emplacement of Wing I missiles.

DESCRIPTION, REQUIREMENTS & RECOMMENDATIONS:

This lead assembly must be capable of mating with J1 of 10-20994-11 (part of LMON 7679 or ACO 3007), with one lead capable of attachment to the bonding strap located on the first stage skirt, and another lead capable of electrical contact with the structure of the raceway caps and covers. These leads must have sufficient length to conduct an end-to-end electrical continuity test of a completely assembled missile.

This item is identical to Fig. A4062.

SHT 1 OF 1

| ENGINEERING DEPT. | BASE INSTALLATION DEPT. | MANUFACTURING DEPT. | FACILITIES DEPT. |
|---|---|---|---|
| | | | |

NOTE: Use form U3-4071-1000 if additional sheets are required.

ORIGINATING GROUP SUPERVISOR: _____ TELEPHONE: _____

2-6340-0-1 6-14-63
REV.