UNCLASSIFIED

AD 407 782

DEFENSE DOCUMENTATION CENTER

FOR

SCIENTIFIC AND TECHNICAL INFORMATION

CAMERON STATION, ALEXANDRIA, VIRGINIA

UNCLASSIFIED

NOTICE: When government or other drawings, specifications or other data are used for any purpose other than in connection with a definitely related government procurement operation, the U. S. Government thereby incurs no responsibility, nor any obligation whatsoever; and the fact that the Government may have formulated, furnished, or in any way supplied the said drawings, specifications, or other data is not to be regarded by implication or otherwise as in any manner licensing the holder or any other person or corporation, or conveying any rights or permission to manufacture, use or sell any patented invention that may in any way be related thereto.

63-4-2

407782

BOEING

CATALOGED BY DDC
AS AD No. 407782

DDC
RECEIVED
JUN 13 1963
TISIA B

SEATTLE, WASHINGTON

THE BOEING COMPANY

NUMBER T2-2548 Vol. 2

UNCLASSIFIED TITLE Engineering Development

Integration Test No. Two (EDIT-II-1) Report (II)

MODEL NO. WS-133A CONTRACT NO. AF 04(647)-289

ISSUE NO. 44 ISSUED TO Astia

CLASSIFIED TITLE
(STATE CLASSIFICATION)

5-78105-8640-68956
CHARGE NUMBER

SPECIAL LIMITATIONS ON ASTIA DISTRIBUTION

ASTIA may distribute this report to requesting agencies subject to their security agreement, approved fields of interest, and the following:

☒ UNLIMITED—To all agencies of the Department of Defense and their contractors.

☐ LIMITED—To U. S. Military organizations only.

This report may be distributed to nonmilitary agencies not approved above subject to Boeing approval of each request.

NOTE: the LIMITED category may be checked only because of actual or potential patent, proprietary, ethical, or similar implications.

PREPARED BY N. L. Noe / D. M. Viehouser 5/4/62
D. M. Viehouser

SUPERVISED BY E. G. Helling 5/14/62
E. G. Helling

APPROVED BY J. W. Hampton 5/14/62
J. W. Hampton

CLASS. & DISTR. APPROVED BY A. L. Bohn 5/21/62
A. L. Bohn

2-5142

DOCUMENT, TITLE PAGE U3 4287 9000 REV. 10/61

7/22/3

ACTIVE-CHANGED PAGE

ACTIVE			CHANGED					ACTIVE			CHANGED				
SECTION	PAGE	DATE	SECTION	PAGE REVISED	PAGE ADDED	PAGE DELETED	DATE	SECTION	PAGE	DATE	SECTION	PAGE REVISED	PAGE ADDED	PAGE DELETED	DATE
1	Original release 1 thru 46	5/7/62													
2	1 thru 25														
3	1 thru 4	5/7/62													
			1	1 2 3 4	3.1		2/22/63								
			4		1 thru 43		2/22/63								
			5		1 thru 34										
			6		1 thru 8		2/22/63								

TABLE OF CONTENTS

		Page
Section I		
1.0.0	Purpose and Scope	5
1.1.0	Equipment in Test	5
2.0.0	Summary	5
3.0.0	Report	6
4.0.0	Conclusion	46
Section II		
	Manufacturing & Inspection Record Test Log	
Section III		
	Photographs of Equipment	
Section IV		
1.0.0	Purpose	2
1.1.0	Equipment	2
2.0.0	Summary	2
3.0.0	Report	4
4.0.0	Conclusion	43

R

Section V

Manufacturing and Inspection Record
Test Log

Section VI

Photographs of Equipment

FIGURE INDEX

		Section	Page
Figure 3.1.1.2-1	Self-Test Connection	1	8
Table 3.1.3.2-1	Voltage Requirements	1	13
Figure 3.2.1.3-1	P/G Test Connection	1	21
Table 3.2.2.2-1	Voltage Requirements	1	24
Table 3.2.2.4-1	Voltage Requirements	1	25
Table 3.1.1.2-4	Self-Test Connection	4	5
Table 3.1.3.2-4	Voltage Requirements	4	11
Table 3.2.1.3-4	P/G Test Connection	4	19
Table 3.2.2.2-4	Voltage Requirements	4	22
Table 3.2.2.4-4	Voltage Requirements	4	23

1.0.0 PURPOSE AND SCOPE

1.0.1 The purpose of this volume is to present the test report for Engineering Development Integration Test - II on Block Change -1 equipment (EDIT II-1). The EDIT II-1 test was conducted in accordance with the Test Procedures Document D2-13308 Volume 2 and the EDIT Program Plan, D2-13307.

1.1.0 EQUIPMENT IN TEST

Programmer Group, Figure A 1201

Programmer Group Test Set (Portable) Figure A 3092

Relay Assembly, Dummy Decoder, Figure A 3113

400 Cycle Power Control Box (25-34035)

EDIT Power Supply Cable (Power supply to 400 cycle control box).

2.0.0 SUMMARY

2.0.1 A self test of the Programmer Group (P/G) Test Set was completed with one minor discrepancy noted. In the voltage checks of paragraph 3.1.3.2 -(3) at Selector Switch positions 15 and 18, voltages were found to be slightly out of tolerance. The purpose of these voltage checks was to verify continuity. The tolerances given are being changed to allow for diode voltage drops which were larger than anticipated.

Compatibility tests between the P/G and its Test Set resulted in No-Go's from approximately 15 cards. It was found that the phase supply voltage rise time of the P/G was operating near the lower limit of tolerance. The P/G model specifications state that rise time of the phase supply voltage should be measured in the range from 10 to 90 percent of the pulse magnitude of 12 volts. The P/G functional test was set up using this 10 to 90 percent range for phase supply voltage testing. When functionally tested, the P/G was found to be within tolerance. The P/G Test Set, however, was calibrated to measure rise time in the range from 3 to 10 volts (25 to 83.3 percent) of the pulse magnitude. In other words, the P/G Test Set measured the rise time of the phase supply voltage over a narrower range than was used in the P/G functional test. As a result, the phase supply voltage was slightly out of tolerance and the P/G Test Set initiated the No-Go's.

The P/G Test Set evaluators were recalibrated to measure the phase supply voltage rise time over a wider range. After recalibration the compatibility tests were repeated with acceptable results.

3.0.0 REPORT

3.0.1 The EDIT II-1 test was performed according to the Test Procedure Document D2-13308, Volume 2. These procedures and the recorded results are given in paragraph 3.1.0.0 through 3.3.8.3 which follow.

PROCEDURE	ACCEPTABLE DATA	RECORD DATA	COMMENTS
3.1.0.0 P/G TEST SET SELF-TEST PROCEDURES 3.1.1.0 Test Set-Up 3.1.1.1 The P/G Test Set must be isolated from all electronic equipment with the exception of the Test Set Power case. 3.1.1.2 Connect the regulated power supply suitcase to the Test Set electronic component and control suitcase as shown in Figure 3.1.1.2-1.			

Figure 3.1.1.2-1

Self-Test Connection

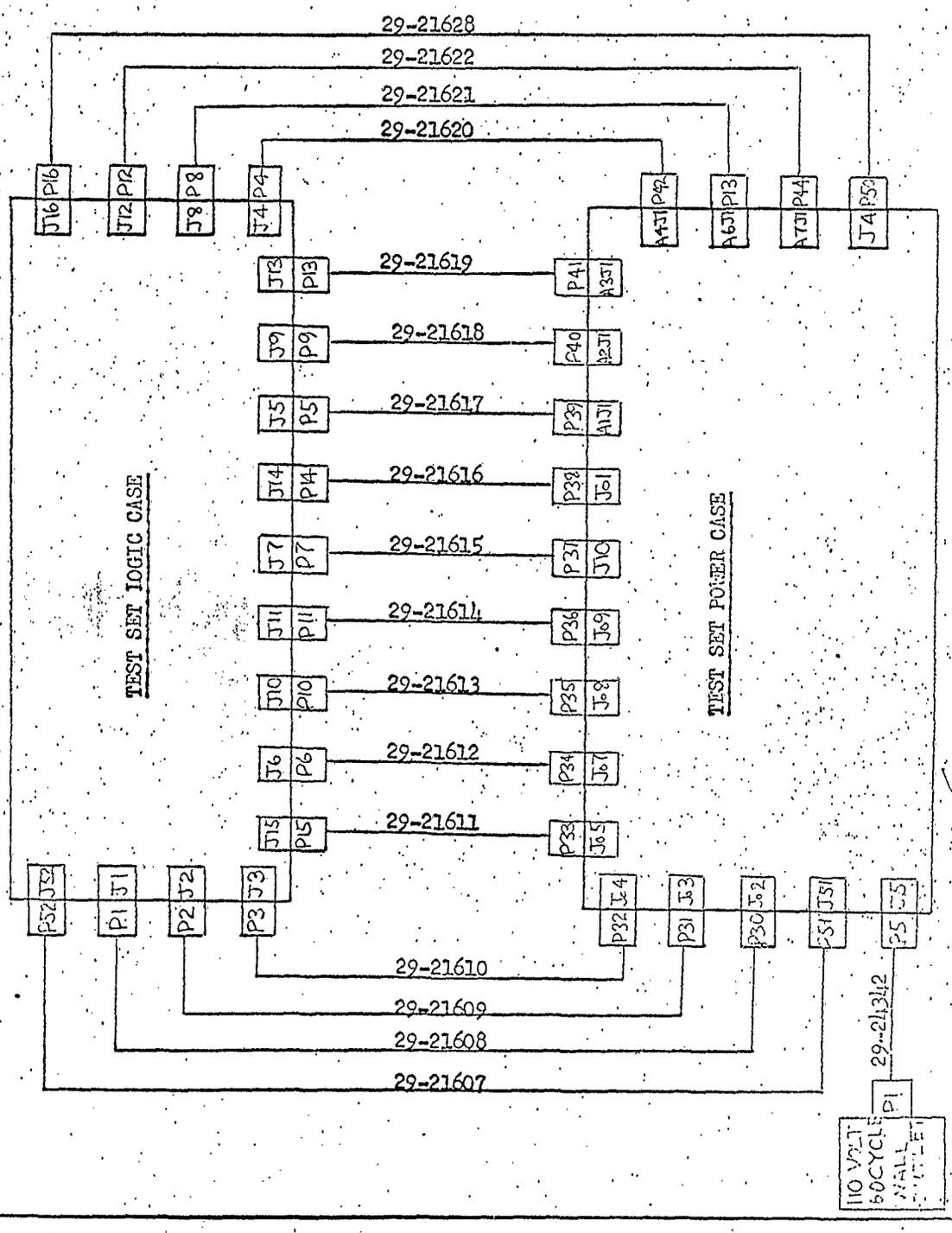

PROCEDURE	ACCEPTABLE DATA	RECORD DATA	COMMENTS
3.1.1.3 Connect power cable to 120 volt, 60 cps outlet.			
3.1.1.4 Press the TEST SET POWER ON switch on the Test Set. NOTE: The Test Set must be ON for 30 seconds before running any card tests.	TEST SET POWER ON lamp turns ON. The AFS ALARM and W/H ALARM lamps turn ON. The WARNING lamp starts flashing at 4 cps. These conditions exist until the 13th card.	OK OK OK	
3.1.1.5 Press the P/G POWER ON switch.	P/G POWER ON lamp ON.	OK	

PROCEDURE	ACCEPTABLE DATA	RECORD DATA	COMMENTS
3.1.2.0 Card Tests			
3.1.2.1 Insert selected punched cards in the Test Set CARD READER face up and beveled corner out. Push CARD READER HANDLE fully down to engage electrical contacts.			
3.1.2.2 Push START TEST button on the Test Set. NOTE: The START TEST switch must be held down until the START TEST lamp turns ON.	START TEST lamp ON.	OK	
3.1.2.3 When GO lamp illuminates and the TEST IN PROCESS lamp goes OFF, lift the card reader handle and remove card.	TEST IN PROCESS lamp OFF. GO or NO-GO lamp ON.	OK OK	

PROCEDURE	ACCEPTABLE DATA	RECORD DATA	COMMENTS
3.1.2.3 (Continued) NOTE: Additional instructions, when needed, are given for each card test.			
3.1.2.4 Record each test result in appropriate column allocated for each card or voltage test in this document.			
3.1.2.5 Repeat paragraphs 3.1.2.1 thru 3.1.2.4 for each succeeding test.			
3.1.3.0 Self-Test			
3.1.3.1 Select punched cards (25-30947-125 thru 25-30947-147) for self-test of the Test Set.			

PROCEDURE	ACCEPTABLE DATA	RECORD DATA	COMMENTS
3.1.3.2			
Follow paragraphs 3.1.2.1 thru 3.1.2.5 starting with card 25-30947-125.			
(1) Card 25-30947-125. After the GO lamp is ON, set the Range Switch at 3, and rotate the Selector Switch successively through the positions indicated in Table 3.1.3.2-1. Read the voltmeter at each position of the Selector Switch.	GO lamp ON. The voltmeter shall read 10 ± 0.5 volts at each setting of the Selector Switch.	OK See Table 3.1.3.2-1	
(2) Card 25-30947-126. Follow same procedure as number 1 above.	NO-GO lamp ON. The voltmeter shall read 10 ± 0.5 volts at each setting of the Selector Switch except at position 14 which reads 0 ± 0.5 volts.	OK See Table 3.1.3.2-1	

Table 3.1.3.2-1

Voltmeter Switching Requirements Self-Test Procedure

Selector Switch Position	Card-125 Accpt. Volts	Card-125 Volts Read	Card-126 Accpt. Volts	Card-126 Volts Read	Card-127 Accpt. Volts	Card-127 Volts Read	Card-128 Accpt. Volts	Card-128 Volts Read
1	10 ± 0.5 V	10.0 V	10 ± 0.5 V	10.0 V	10 ± 0.5 V	10.0 V	—	
2							—	
3							—	
4							—	
5							—	
6							—	
7							—	
8							10 ± 0.5 V	10.0 V
9							—	
10							10 ± 0.5 V	10.0 V
11								
12	10 ± 0.5 V	10.0 V						
13	—		10 ± 0.5 V	10.0 V	10 ± 0.5 V	10.0 V		
14	10 ± 0.5 V	10.0 V	0 ± 0.5 V	0.0 V	—			
15			10 ± 0.5 V	10.0 V	10 ± 0.5 V	-9.3 V		
16					—			
17	10 ± 0.5 V		10 ± 0.5 V	10.0 V	—			
18	10 ± 0.5 V	10.0 V	—		10 ± 0.5 V	-9.3 V		

PROCEDURE	ACCEPTABLE DATA	RECORD DATA	COMMENTS
(3) Card 25-30947-127. Follow same procedure as number 1 above.	GO lamp ON. The voltmeter shall read 10 ± 0.5 volts at each setting of the Selector Switch.	OK See Table 3.1.3.2-1.	At Selector switch position #15 & 18, 9.3 V were indicated on the voltmeter. The tolerances of voltages given will be changed since the purpose of these voltage checks is to verify continuity. The voltage drops across the diodes were of greater magnitude than originally anticipated.
(4) Card 25-30947-128. Follow same procedure as number 1 above.	NO-GO lamp ON. The voltmeter shall read 10 ± 0.5 volts at each setting of the Selector Switch.	OK See Table 3.1.3.2-1.	
(5) Card 25-30947-129. NOTE: This test requires 66 seconds for completion.	GO lamp ON.	OK	This card resulted in a GO but the test did not require 66 seconds. This was due to a mispunched card which checked the timer in the P/G. Using a new card, the test was repeated with acceptable results.

PROCEDURE	ACCEPTABLE DATA	RECORD DATA	COMMENTS
(6) Card 25-30947-130	GO lamp ON.	OK	
(7) Card 25-30947-131	NO-GO lamp ON.	OK	
(8) Card 25-30947-132	GO lamp ON.	OK	
(9) Card 25-30947-133	GO lamp ON.	OK	
(10) Card 25-30947-134	NO-GO lamp ON.	OK	
(11) Card 25-30947-135	GO lamp ON.	OK	
	The stepping switch will scan 4 times during test with an audible pause between scans.	OK	
Repeat test but this time push the P/G POWER OFF switch during first scan of stepping switch.	NO-GO lamp ON.	OK	

PROCEDURE	ACCEPTABLE DATA	RECORD DATA	COMMENTS
(12) Card 25-30947-136	GO lamp ON.	OK	
(13) Card 25-30947-137. Repeat test, but this time push the P/G POWER OFF switch during test.	GO lamp ON.	OK	
	NO-GO lamp ON.	OK	
	The W/H ALARM, AFS ALARM and WARNING lamps will turn OFF when the P/G POWER OFF switch is depressed. The lamps will turn back ON when switch is released.	OK	
(14) Card 25-30947-138.	GO lamp ON.	OK	
	The AFS ALARM lamp turns OFF during test.	OK	

PROCEDURE	ACCEPTABLE DATA	RECORD DATA	COMMENTS
(15) Card 25-30947-139. Initiate test and observe the START TEST, AFS SAFETY, W/H ALARM, and WARNING lamps.	The following events take place:		
	A. Shortly after pressing the START TEST switch:		
	(1) The AFS ALARM lamp turns OFF momentarily.	OK	
	(2) The START TEST lamp turns ON.	OK	
	B. After the START TEST lamp turns ON:		
	(1) The W/H ALARM turns OFF.	OK	
	(2) The WARNING lamp starts flashing at 25% duty cycle.	OK	

91

PROCEDURE	ACCEPTABLE DATA	RECORD DATA	COMMENTS
(15) (Continued)	C. When the W/H ALARM turns OFF, the AFS ALARM lamp starts flashing at 8 cps.	OK	
	D. When the stepping switch starts to scan, the W/H ALARM lamp turns ON, the AFS ALARM lamp goes back to steady ON state, and the WARNING lamp resumes flashing at 4 cps.	OK OK OK	
	GO lamp ON.	OK	
(16) Card 25-30947-140	NO-GO lamp ON.	OK	
(17) Card 25-30947-141	GO lamp ON.	OK	

PROCEDURE	ACCEPTABLE DATA	RECORD DATA	COMMENTS
(18) Card 25-30947-142	GO lamp ON.	OK	
(19) Card 25-30947-143	GO lamp ON.	OK	
(20) Card 25-30947-144	GO lamp ON	OK	
	The W/H ALARM, AFS ALARM and WARNING lamps will turn OFF when the card reader handle is operated UP.	OK	
	The START TEST lamp turns ON.	OK	
	When the stepping switch starts its scan, the lamps will turn back ON.	OK	
	AFS alarm OFF.	OK	
(21) Card 25-30947-145	GO lamp ON.	OK	
(22) Card 25-30947-146	GO lamp ON.	OK	
(23) Card 25-30947-147	GO lamp ON.	OK	

PROCEDURE	ACCEPTABLE DATA	RECORD DATA	COMMENTS
3.2.0.0 COMPATIBILITY TEST OF P/G WITH THE P/G TEST SET.			
3.2.1.0 Test Set-Up.			
3.2.1.1 The P/G must be isolated from all electronic equipment with the exception of its SOURCE POWER SUPPLY and associated P/G Test Set equipment.			
3.2.1.2 Apply cooling air to P/G (ref. 2.1.2)			
3.2.1.3 Make the cable connections shown in Figure 3.2.1.3-1.			

Figure 3.2.1.3-1

P/G Test Connection

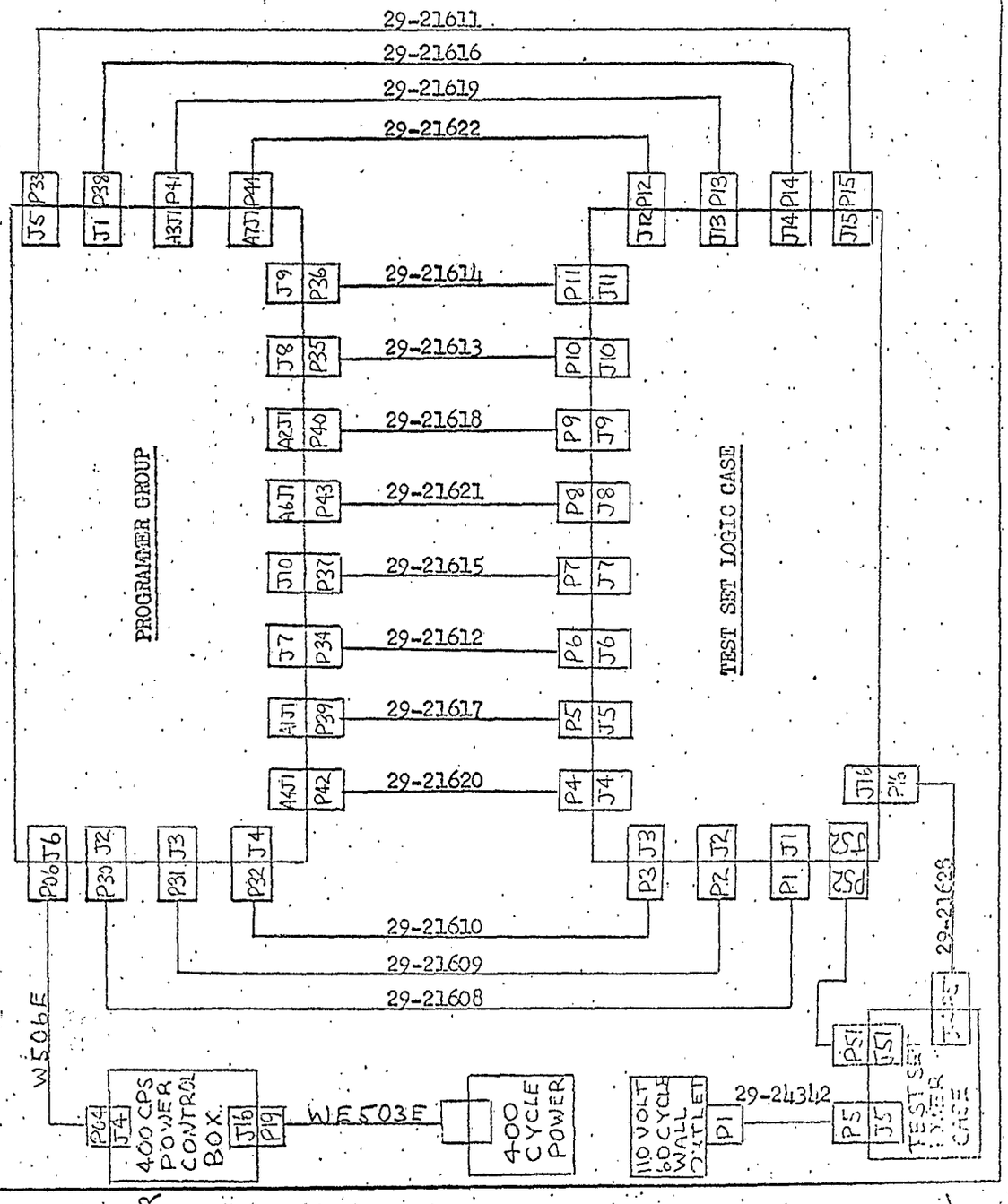

PROCEDURE	ACCEPTABLE DATA	RECORD DATA	COMMENTS
3.2.1.4 The Dummy Decoder is inserted into Launch Drawer No. 1 of the P/G.			
3.2.1.5 Press the TEST SET POWER ON switch. NOTE: The MONITOR POWER ON lamp on the P/G will have been ON continuously during preceding tests. It will remain ON until the main LF circuit breaker is tripped OFF to replace a faulty P/G drawer.	TEST SET POWER ON lamp ON.	OK	
3.2.1.6 Press the P/G POWER ON switch.	P/G POWER ON lamps ON.	OK	

PROCEDURE	ACCEPTABLE DATA	RECORD DATA	COMMENTS
3.2.1.4 The Dummy Decoder is inserted into Launch Drawer No. 1 of the P/G.			
3.2.1.5 Press the TEST SET POWER ON switch. NOTE: The MONITOR POWER ON lamp on the P/G will have been ON continuously during preceding tests. It will remain ON until the main LF circuit breaker is tripped OFF to replace a faulty P/G drawer.	TEST SET POWER ON lamp ON.	OK	
3.2.1.6 Press the P/G POWER ON switch.	P/G POWER ON lamps ON.	OK	

PROCEDURE	ACCEPTABLE DATA	RECORD DATA	COMMENTS
3.2.2.0 Voltage Level Check			
3.2.2.1 P/G. Monitor Power ON Only			
3.2.2.2 Measure the voltages at the Range and Selector positions on the Test Set as specified in Table 3.2.2.2-1. Record the results of each test on specified Table.	See Table 3.2.2.2-1.		
3.2.2.3 P/G Monitor and Test Power ON			
3.2.2.4 Measure the voltages at the Range and Selector positions on the Test Set as specified in Table 3.2.2.4-1. Record	See Table 3.2.2.4-1.		

SELECTOR	RANGE											
	+20 Volts DC						-20 V DC		+40 V DC		-40 V DC	
	1	1	2	2	3	3	4	4	5	5	6	6
	Accept Volts	Volts Read	Accept Volts	Volts Read	Accept Volts	Volts Read	Accept Volts	Volts Read	Accept Volts	Volts Read	Accept Volts	Volts Read
1	0 to 2	0	0 to 2	0	0 to 2	0	0 to 2	0	0 to 5	0	0 to 5	0
2	0 to 0.5	0					0 to 0.5	0	28 ± 1	27.8		
3	10 ± 0.5	10.3					10 ± 0.5	10.3	0 to 0.5	0		
4	0 to 0.5	0					0 to 0.5	0	28 ± 1	27.8		
5	10 ± 0.5	10.3					10 ± 0.5	10.3	0 to 0.5	0		
6	0 to 0.5	0					0 to 0.5	0	0 to 0.5	0		
7	10 ± 0.5	10.3					10 ± 0.5	10.3	28 ± 1	27.8		
8	0 to 0.5	0					0 to 0.5	0	0 to 0.5	0		
9	10 ± 0.5	10.3					10 ± 0.5	10.3	28 ± 1	27.8		
10	10 ± 0.5	10.3					0 to 0.5	0	0 to 0.5	0		
11	0 to 0.5	0					10 ± 0.5	10.3	28 ± 1	27.8		
12	11.5±0.5	11.4	0 to 2	0			17.5±2.5	18.3	28 ± 1	27.8		
13	17 ± 2	17.5					17.5±2.5	18.3	36 ± 3	35.0		
14	17 ± 2	17.5							36 ± 3	35.0		
15	17 ± 2	17.5										
16	17 ± 2	17.5										
17												
18					0 to 2	0						

TABLE 3.2.2.2-1

SELECTOR	RANGE: +20 Volts DC						-20 V DC		+40 V DC		-40 V DC	
	1	1	2	2	3	3	4	4	5	5	6	6
	Accept Volts	Volts Read	Accept Volts	Volts Read	Accept Volts	Volts Read	Accept Volts	Volts Read	Accept Volts	Volts Read	Accept Volts	Volts Read
1	10 ± 0.5	10.0	10 ±0.5	10.0	10. ±0.5	10.0	10 ±0.5	10.0	28 ± 1	28.5	30 ± 1	30.0
2												
3												
4												
5												
6												
7												
8												
9												
10												
11	10 ± 0.5	10.0					10 ± 0.5	10.0				
12	11.5±0.5	11.4	10. ±0.5	10.0			17.5±2.5	17.1	28 ± 1	28.5		
13	17 ± 2	17.1					17.5±2.5	17.1	36 ± 3	36.0		
14	17 ± 2								36± 3	36.0		
15	17 ± 2											
16	17 ± 2	17.1										
17												
18					10. ±0.5	10.0						

TABLE 3.2.2.4-1

PROCEDURE	ACCEPTABLE DATA	RECORD DATA	COMMENTS
(1) 25-31059-106			
NOTE: This Test shall be performed prior to any other test.	GO lamp ON	OK	
(2) 25-31059-107		OK	
(3) 25-31059-108		OK	
(4) 25-31059-109		OK	
(5) 25-31059-110	GO lamp ON.	OK	
3.2.4.0			
End to End Test			
3.2.4.1			
Select punched cards (25-26642-165 thru 25-26642-232) for End-to-End Test.			

PROCEDURE	ACCEPTABLE DATA	RECORD DATA	COMMENTS
3.2.2.4 (Continued) the results of each test on specified table.			
3.2.3.0 Phase Supply Voltage Test			
3.2.3.1 Select punched cards (25-31059-106 thru 25-31059-110) to check the phase supply voltage in each of the five drawers.			
3.2.3.2 Follow paragraphs 3.1.2.1 thru 3.1.2.5 of this volume starting with card 25-31059-106. NOTE: For more detail on function of these cards, see D2-12636 Volume I.			

PROCEDURE	ACCEPTABLE DATA	RECORD DATA	COMMENTS
3.2.4.2			
Follow paragraphs 3.1.2.1 thru 3.1.2.5 of this volume and additional instructions stated in the procedure for each card, starting with card 25-26642-165.			
NOTE: For more detail on function of these cards, see D2-12636 Volume II.			
(1) 25-26642-165	GO lamp ON	OK	
(2) 25-26642-166		OK	
(3) -168		OK	
(4) -169		OK	
(5) -170		OK	
(6) -171		OK	
(7) -172		OK	
(8) -173		OK	
(9) -174		OK	
(10) 25-26642-175	GO lamp ON.	OK	

PROCEDURE	ACCEPTABLE DATA	RECORD DATA	COMMENTS
3.2.4.2 (Continued)			
(11) 25-26642-176	GO lamp ON	OK	
(12) -177			
(13) -178			
(14) -179 OMIT			
(15) -180			
(16) -181			
(17) -182			
(18) -183			
(19) -184			
(20) -185			
(21) -186 OMIT			
(22) -187			
(23) -188			
(24) -1899			
(25) -190			
(26) -191			
(27) 25-26642-192 OMIT	GO lamp ON	OK	

PROCEDURE	ACCEPTABLE DATA	RECORD DATA	COMMENTS
3.2.4.2 (Continued)			
(28) 25-26642-193	GO lamp ON	OK	
(29) -194			
(30) -195			
(31) -196			
(32) -197			
(33) -198			
(34) -199			
(35) -200			
(36) -201			
(37) -202 OMIT			
(38) -203 OMIT			
(39) -204			
(40) -205			
(41) -206			
(42) -207			
(43) -208			
(44) 25-26642-209	GO lamp ON	OK	

PROCEDURE	ACCEPTABLE DATA	RECORD DATA	COMMENTS
(45) 25-26642-210	GO lamp ON	OK	
(46) -211			
(47) -212 OMIT			
(48) -213 OMIT			
(49) -214			
(50) -215			
(51) 25-26642 -216	GO lamp ON	OK	
3.2.4.3 Card 25-26642-216			
3.2.4.4 Select punched card 25-26642-216.			
3.2.4.5 Follow paragraph 3.2.1.			

PROCEDURE	ACCEPTABLE DATA	RECORD DATA	COMMENTS
3.2.4.6 Wait 40 ± 2 minutes and then push START TEST button.	NO-GO lamp ON.	OK	
3.2.4.7 Open and close the card reader and wait another 10 ± 2 minutes; then follow paragraphs 3.1.2.1 thru 3.1.2.4.	GO lamp ON.	OK	
3.2.4.8 Card 25-26642-217			
3.2.4.9 Select punched card 25-26642-217.			
3.2.4.10 Follow paragraph 3.1.2.1.			

PROCEDURE	ACCEPTABLE DATA	RECORD DATA	COMMENTS
3.2.4.11 Depress the SHUT DOWN LAUNCH FACILITY button on the P/G. CONTINUE TO HOLD BUTTON DOWN THROUGHOUT THIS CARD TEST. Release only after GO or NO-GO is received.			
3.2.4.12 Follow paragraphs 3.1.2.2 thru 3.1.2.4.	GO lamp ON.	OK	
3.2.4.13 Card 25-26642-218.			
3.2.4.14 Select punched card 25-26642-218.			
3.2.4.15 Follow paragraph 3.2.1.			

PROCEDURE	ACCEPTABLE DATA	RECORD DATA	COMMENTS
3.2.4.16 Depress the P/G POWER OFF switch on the BGS-74 to initiate shut down. KEEP DEPRESSED FOR DURATION OF TEST.			
3.2.4.17 Follow paragraphs 3.1.2.1 thru 3.1.2.4. NOTE: To start up after the foregoing test, depress P/G POWER ON switch.	GO lamp ON.	OK	
3.2.4.18 Select punched cards (25-26642-219 thru 25-26642-232).			
3.2.4.19 Follow paragraphs 3.1.2.1 thru 3.1.2.5 of this volume starting with card 25-26642-219.			

PROCEDURE	ACCEPTABLE DATA	RECORD DATA	COMMENTS
(1) 25-26642-219	GO lamp ON	OK	
(2) -220			
(3) -221			
(4) -222			
(5) -223			
(6) -224			
(7) -225			
(8) -226			
(9) -227			
(10) 25-26642-228			
(11) -229			
(12) -230			
(13) -231			
(14) 25-26642-232			
3.2.5.0 Timer Sequential Drawer Test	GO lamp ON	OK	
3.2.5.1 Select punched cards (25-26643-120 thru 25-26643-138)			

PROCEDURE	ACCEPTABLE DATA	RECORD DATA	COMMENTS
3.2.5.2 Follow paragraphs 3.1.2.1 thru 3.1.2.5 of this volume starting with card 25-26643-120. NOTE: For more detail on function of these cards, see D2-12636, Volume III.			
(1) 25-26643-120	GO lamp ON.	OK	
(2) -121			
(3) -122 OMIT			
(4) -123			
(5) -124			
(6) -125			
(7) -126			
(8) -127			
(9) -128			
(10) -129			
(11) 25-26643-130	GO lamp ON.	OK	

PROCEDURE	ACCEPTABLE DATA	RECORD DATA	COMMENTS
3.2.5.2 (Continued)			
(12) 25-26643-131	GO lamp ON.	OK	
(13) -132			
(14) -133			
(15) -134			
(16) -135			
(17) -136			
(18) -137			
(19) 25-26643-138	GO lamp ON.	OK	
3.2.6.0			
Programmer Launch Sequence Drawer Test			
3.2.6.2			
Select punched cards (25-26644-128 thru 25-26644-155)			
3.2.6.2			
Follow paragraphs 3.1.2.1 thru 3.1.2.5 of this volume starting with 25-26644-128.			

PROCEDURE	ACCEPTABLE DATA	RECORD DATA	COMMENTS
3.2.6.2 (Continued)			
NOTE: For more detail on function of these cards, see D2-12636 Vol. IV.			
(1) 25-26644-128	GO lamp ON.	OK	
(2) -129			
(3) -130			
(4) -131			
(5) -132			
(6) -133			
(7) -134			
(8) -135			
(9) -136			
(10) -137			
(11) -138			
(12) -139			
(13) -140			
(14) 25-26644-141	GO lamp ON.	OK	

PROCEDURE	ACCEPTABLE DATA	RECORD DATA	COMMENTS
3.2.6.2 (Continued)			
(15) 25-26644-142	GO lamp ON.	OK	
(16) -143			
(17) -144			
(18) -145			
(19) -146			
(20) -147			
(21) -148			
(22) -149			
(23) -150			
(24) -151			
(25) -152			
(26 -153			
(27) -154			
(28) 25-26644-155	GO lamp ON	OK	

PROCEDURE	ACCEPTABLE DATA	RECORD DATA	COMMENTS
3.2.7.0 Programmer Calibrator Test Drawer Test			
3.2.7.1 Select punched cards (25-26645-128 thru 25-26645-157)			
3.2.8.2 Follow paragraphs 3.1.2.1 thru 3.1.2.5 of this volume, starting with card 25-26645-128. NOTE: For more detail on function of these cards, see D2-12636, Volume V.			
(1) 25-26645-128	GO lamp ON	OK	
(2) -129			
(3) -130			
(4) -131			
(5) -132			
(6) 25-26645-133	GO lamp ON	OK	

PROCEDURE	ACCEPTABLE DATA	RECORD DATA	COMMENTS
3.2.7.2 (Continued)			
(7) 25-26645-134	GO lamp ON.	OK	
(8) -135			
(9) -136			
(10) -137			
(11) -138			
(12) -139			
(13) -140			
(14) -141			
(15) -142			
(16) -143			
(17) -144			
(18) -145			
(19) -146			
(20) -147			
(21) -148			
(22) 25-26645-149	GO lamp ON.	OK	

PROCEDURE	ACCEPTABLE DATA	RECORD DATA	COMMENTS
3.2.7.2 (Continued)			
(23) 25-26645-150	GO lamp ON.	OK	
(24) -151			
(25) -152			
(26) -153			
(27) -154			
(28) -155			
(29) -156			
(30) 25-26645-157			
3.2.8.0	GO lamp ON.	OK	
Monitor Launcher Missile Status Drawer Test			
3.2.8.1			
Select punched cards (25-26646-137 thru 25-26646-172)			
3.2.8.2			
Follow paragraphs 3.1.2.1 thru 3.1.2.5 of this volume, starting with card 25-26646-137.			

PROCEDURE	ACCEPTABLE DATA	RECORD DATA	COMMENTS
3.2.8.2 (Continued)			
(1) 25-26646-137	GO lamp ON	OK	
(2) -138 OMIT			
(3) -139			
(4) -140			
(5) -141			
(6) -142			
(7) -143			
(8) -144			
(9) -145			
(10) -146			
(11) -147 OMIT			
(12) -148			
(13) -149 OMIT			
(14) -150			
(15) -151 OMIT			
(16) -152 OMIT			
(17) 25-26646-153	GO lamp ON.	OK	

PROCEDURE	ACCEPTABLE DATA	RECORD DATA	COMMENTS
3.2.8.2 (Continued)			
(18) 25-26646-154	GO lamp ON.	OK	
(19) -155			
(20) -156			
(21) -157			
(22) -158			
(23) -159			
(24) -160			
(25) -161 OMIT			
(26) -162			
(27) -163			
(28) -164			
(29) -165			
(30) -166			
(31) -167			
(32) -168			
(33) -169			
(34) 25-26646-170	GO lamp ON	OK	

PROCEDURE	ACCEPTABLE DATA	RECORD DATA	COMMENTS
3.2.8.2 (Continued)			
(35) 25-26646-170	GO lamp ON.	OK	
(36) 25-26646 -171	GO lamp ON.	OK	
(37) 25-26646-172	GO lamp ON.	OK	
3.3.8.3			
Test Complete.			

4.0.0 CONCLUSION

4.0.1 The EDIT II-1 tests demonstrated that the Programmer Group and Programmer Group Test Set are physically, functionally, and electrically compatible. The problems noted in the summary of this report, while not serious, have been corrected.

THE BOEING COMPANY

NUMBER T2-2548 MODEL NO. WS-133A

TITLE Engineering Development Integration Test No. Two (EDIT II-1) - Test Log

2-5142

PREPARED BY	N. L. Noe	5/4/62
	D.M. Viehouser	5/4/62
SUPERVISED BY	E.G. Helling	5/14/62
APPROVED BY	J.W. Hampton	5/14/62
RELIABILITY APPROVAL		(DATE)

SECTION TITLE PAGE U3 4288 0000 REV. 2/61

AF 04(748)-289
CONTRACT NO.

5-78105-8640-68956
CHARGE NUMBER

1.0.0 MANUFACTURING & INSPECTION RECORD - TEST LOG

1.0.1 The M&IR Test Log shows the test results recorded during EDIT II-1. The compatibility of the P/G and P/G Test Set was satisfactorily demonstrated on 30 March 1962, with representatives of BSD/STL attending the demonstration. Boeing Quality Control verification was not required for the Test Log.

TEST NUMBER	UNIT SERIAL NUMBER	TEST PLANNING BY	TEST PLANNING DATE	MANUFACTURING AND INSPECTION RECORD TEST LOG	PAGE	OF
EDIT II-1 D2-13308 Vol. 2	P/G 0000001 P/G Test Set 002			PAGE SER. NO.	1	23

TEST ITEM MODEL NO.	SER. NO.	WORK ORDER NO.	AUTHORITY	PLANNING BUDGET VERIFICATION	DATE
WS 133A		78105	EWA 08-956		3-10-62

TIME	CONDITION NO.	WORK ITEM NO.		REF E. R. SER. NO.	OPERATION COMPLETION SHOP	INSP.	ENGR.
			The purpose of this Test is to determine and demonstrate the compatible operation of the BC-1 Programmer Group, Fig. A 1201 and the Programmer Group Test Set, Fig. A 3092. This Test is to be conducted in accordance with D2-13308 Vol. 2.				3
		Vol. 2 Sec. 2 M2-2548 Page 3					

PAGE OF	JOB NUMBER	PART NUMBER	NOMENCLATURE	LEAD INSP. STAMP	LEAD INSP. DATE	INSP. REG. STAMP	INSP. REG. DATE	CUS.
	61347	25-22036-70 25-29278-2	Programmer Group (P/G) P/G Test Set					

2h

TEST NUMBER	UNIT SERIAL NUMBER	TEST PLANNING BY	TEST PLANNING DATE	MANUFACTURING AND INSPECTION RECORD TEST LOG	PAGE OF
EDIT II-1 D2-13308 Vol. 2	P/G 0000001 P/G Test Set 002			PAGE SER. NO.	2 2

MODEL NO.	TEST ITEM SER. NO.	WORK ORDER NO.	AUTHORITY	PLANNING BUDGET VERIFICATION	DATE
WS 133A		78105	EWA 08-956		3-10-6

TIME	CONDITION NO.	WORK ITEM NO.		REF E. R. SER. NO.	OPERATION COMPLETION SHOP	INSP.	ENGR.
			Self-Test utilizing cables for pre-Testing Only.				
1000			3.1.3.0 Self-Test Completed OK				DM
			Self-Test utilizing cables intended for EDIT II-1 but not bought-off by Quality Control.				
1100			3.1.3.0 Self-Test (NOT Completed)				DM
		Vol. 2 Sec. 2	Note: Trouble; wire continuity and workmanship of cables incorrect.				
		T2-2548 Page 4					

PAGE OF	JOB NUMBER	PART NUMBER	NOMENCLATURE	LEAD INSP. STAMP	LEAD INSP. DATE	INSP. REG. STAMP	INSP. REG. DATE	CUS.
	61347	25-22036-70	Programmer Group (P/G)					
		25-29278-2	P/G Test Set					

U3 4400 5605 ORIG. 6/60

61

TEST NUMBER	UNIT SERIAL NUMBER	TEST PLANNING BY	TEST PLANNING DATE	MANUFACTURING AND INSPECTION RECORD TEST LOG	PAGE OF
EDIT II-1 D2-13308 Vol. 2	P/G 0000001 P/G Test Set 002			PAGE SER. NO.	2

MODEL NO.	TEST ITEM SER. NO.	WORK ORDER NO.	AUTHORITY	PLANNING BUDGET VERIFICATION	DATE
WS 133A		78105	EWA 08-956		3-13-

TIME	CONDITION NO.	WORK ITEM NO.		REF E. R. SER. NO.	OPERATION COMPLETION SHOP	INSP.	ENGR.
			Self-Test Utilizing EDIT II-1 cables bought-off by Quality Control.				
1400			3.1.3.0 Self-Test (completed) OK				DM
		Vol. 2 Sec. 2					
		D2-2548 Page 5					

PAGE OF	JOB NUMBER	PART NUMBER	NOMENCLATURE	LEAD INSP. STAMP	LEAD INSP. DATE	INSP. REG. STAMP	INSP. REG. DATE	CUS.
	61347	25-22036-70	Programmer Group (P/G)					
		25-29278-2	P/G Test Set					

U3 4400 5605 ORIG. 6/60

TEST NUMBER	UNIT SERIAL NUMBER	TEST PLANNING BY	TEST PLANNING DATE	MANUFACTURING AND INSPECTION RECORD TEST LOG	PAGE OF
EDIT II-1 D2-13308 Vol.2	P/G 0000001 P/G Test Set 002			PAGE SER. NO.	4 OF 2

TEST ITEM MODEL NO.	SER. NO.	WORK ORDER NO.	AUTHORITY	PLANNING BUDGET VERIFICATION	DATE
WS 133 A		78105	EWA 08-956		3-13-6

TIME	CONDITION NO.	WORK ITEM NO.		REF E.R. SER. NO.	OPERATION COMPLETION SHOP	INSP.	ENGR.
			Compatibility Test between Fig A 1201 and Fig. A 3092. Time on elapsed Time meter, 0673.0 Hrs.				DMM
1500			3.2.2.0 Voltage Level Checks				
			3.2.2.1 P/G Monitor Power On Only (Completed) Ok				DMM
1515			3.2.2.3 P/G Monitor and Test Set Power On (completed) Ok				DMM
1530		Vol. 2 Sec. 2	3.2.3.0 Phase Supply Voltage Tests (Completed)				DMM
		T2-2548 Page 6	Note: Cards -106 and -107 were mispunched and resulted in No-Go's.				

PAGE OF	JOB NUMBER	PART NUMBER	NOMENCLATURE	LEAD INSP. STAMP	LEAD INSP. DATE	INSP. REG. STAMP	INSP. REG. DATE	CUS.
	61347	25-22036-70	Programmer Group (P/G)					
		25-29278-2	P/G Test Set					

U3 4400 5605 ORIG. 6/60

19

TEST NUMBER	UNIT SERIAL NUMBER	TEST PLANNING BY	TEST PLANNING DATE	MANUFACTURING AND INSPECTION RECORD	PAGE	OF
EDIT II-1 D2-13308 Vol.2	P/G 0000001 P/G Test Set 002			TEST LOG PAGE SER. NO.	5	2

MODEL NO.	SER. NO.	WORK ORDER NO.	AUTHORITY	PLANNING BUDGET VERIFICATION	DATE
WS 133 A		78105	EWA 08-956		3-13-6

TIME	CONDITION NO.	WORK ITEM NO.		REF E. R. SER. NO.	OPERATION COMPLETION SHOP	INSP.	ENGR.
1630			3.2.4.0 End-To-End Test (Completed)				JDM
			Note: Cards -218 and -228 resulted in No-Go's.				
		Vol. 2 Seq. 2 M2-2548 Page 7					

PAGE OF	JOB NUMBER	PART NUMBER	NOMENCLATURE	LEAD INSP. STAMP	LEAD INSP. DATE	INSP. REG. STAMP	INSP. REG. DATE	CUS.
	61347	25-22036-70	Programmer Group (P/G)					
	U3 4400 5605 ORIG. 6/60	25-29278-20	P/G Test Set					

TEST NUMBER	UNIT SERIAL NUMBER	TEST PLANNING BY	TEST PLANNING DATE	MANUFACTURING AND INSPECTION RECORD TEST LOG	PAGE OF
EDIT II-1 D2-13308 Vol. 2	P/G 0000001 P/G Test Set 002			PAGE SER. NO.	6 2

TEST ITEM MODEL NO.	SER. NO.	WORK ORDER NO.	AUTHORITY	PLANNING BUDGET VERIFICATION	DATE
WS 133A		78105	EWA 08-956		3-14-6

TIME	CONDITION NO.	WORK ITEM NO.		REF E. R. SER. NO.	OPERATION COMPLETION SHOP	INSP.	ENGR.
0800			3.2.5.0 Launch Drawer No. 1 Test (Completed) Note: Cards -120, -121, -126, -127, -128 and -137 resulted in No-Go's.				JDM
0830			3.2.6.0 Launch Drawer No. 2 Test (Completed) Note: Card -155 resulted in No-Go.				JDM
		Vol. 2 Sec. 2 T2-2546 Page 8					

PAGE OF	JOB NUMBER	PART NUMBER	NOMENCLATURE	LEAD INSP. STAMP	LEAD INSP. DATE	INSP. REG. STAMP	INSP. REG. DATE	CUS.
	61347	25-22036-70 25-29278-2	Programmer Group (P/G) P/G Test Set					

U3 4400 5605 ORIG. 6/60

69

TEST NUMBER	UNIT SERIAL NUMBER	TEST PLANNING BY	TEST PLANNING DATE	MANUFACTURING AND INSPECTION RECORD TEST LOG	PAGE	OF
EDIT D-1 D2-13308 Vol.2	P/G 0000001 P/G Test Set 002			PAGE SER. NO.	7	2

TEST ITEM MODEL NO.	SER. NO.	WORK ORDER NO.	AUTHORITY	PLANNING BUDGET VERIFICATION	DATE
WS 133A		78105	EWA 08-956		3-14-

TIME	CONDITION NO.	WORK ITEM NO.		REF E.R. SER. NO.	OPERATION COMPLETION SHOP	INSP.	ENGR.
0900			3.2.7.0 Sequence Drawer Test (Completed) Note: Cards -151, -152, -153, -154, -155 and -156 resulted in No-Go's.				DMM
0930			3.2.8.0 Monitor-Launcher, Missile Status Test (Completed) Note: Cards -150, -154, -165 and -166 resulted in No-Go's.				DMM

Vol. 2 Sec. 2 T2-2548 Page 9

PAGE	OF	JOB NUMBER	PART NUMBER	NOMENCLATURE	LEAD INSP. STAMP	LEAD INSP. DATE	INSP. REG. STAMP	INSP. REG. DATE	CUS.
		61347	25-22036-70	Programmer Group (P/G)					
			25-29278-2	P/G Test Set					

U3 4400 5605 ORIG. 6/60

49

TEST NUMBER	UNIT SERIAL NUMBER	TEST PLANNING BY	TEST PLANNING DATE	MANUFACTURING AND INSPECTION RECORD TEST LOG	PAGE	OF
EDIT II-1 D2-133C.8 Vol. 2	P/G 000C001 P/G Test Set C02			PAGE SER. NO.		2

MODEL NO.	TEST ITEM SER. NO.	WORK ORDER NO.	AUTHORITY	PLANNING BUDGET VERIFICATION	DATE
WS 133A		78105	EWA 08-956		3/15/6

TIME	CONDITION NO.	WORK ITEM NO.		REF E. R. SER. NO.	OPERATION COMPLETION SHOP	INSP.	ENGR.
0830			Start-up at 0681.0 Hrs. on elapsed time meter.				DM
0845			Re-ran all No-Go cards to verify fault Note: Checked ϕ_1 and ϕ_2 with scope, Both P/G phase supply voltage rise times were close to lower limit (5μ-secs)				DM
0945		Vol. 2 Sec. 2 TR2-2548 Page 10	Re-ran cards indicating No-Go's with P/G Test Set rise time evaluator inhibited. Note: Cards -106 and -107 phase supply; -218 End-to-End; -155 Launch Drawer #2; and -152, -154, -156 Sequencer Drawer resulted in No-Go's.				DM

PAGE OF	JOB NUMBER		PART NUMBER	NOMENCLATURE	LEAD INSP. STAMP	LEAD INSP. DATE	INSP. REG. STAMP	INSP. REG. DATE	CUS.
	61347	TC	25-22036-70 25-29278-2	Programmer Group (P/G) P/G Test Set					

U3 4400 5605 ORIG. 6/60

99

TEST NUMBER	UNIT SERIAL NUMBER	TEST PLANNING BY	TEST PLANNING DATE	MANUFACTURING AND INSPECTION RECORD	PAGE	OF
EDIT II-1 D2-13308 Vol.2	P/G 0000001 P/G Test Set 002			TEST LOG PAGE SER. NO.	9	2

TEST ITEM MODEL NO.	SER. NO.	WORK ORDER NO.	AUTHORITY	PLANNING BUDGET VERIFICATION	DATE
WS 133 A		78105	EWA 08-956		3/16/

TIME	CONDITION NO.	WORK ITEM NO.		REF E. R. SER. NO.	OPERATION COMPLETION SHOP	INSP.	ENGR.
1400			Start-Up at 0684.9 Hrs. on elapsed Time meter.				DM
1410			Ran tests on all No-Go Cards to determine faults.				DM
1645			Shut-down at 0687.5 Hrs. on elapsed Time Meter.				DM
		Vol. 2 Sec. 2					
		D2-2548 Page 11					

PAGE OF	JOB NUMBER		PART NUMBER	NOMENCLATURE	LEAD INSP. STAMP	LEAD INSP. DATE	INSP. REG. STAMP	INSP. REG. DATE	CUS.
	61347 U3 4400 5605 ORIG. 6/60	TC	25-22036-70 25-29278-2	Programmer Group (P/G) P/G Test Set					

9C

TEST NUMBER	UNIT SERIAL NUMBER	TEST PLANNING BY	TEST PLANNING DATE	MANUFACTURING AND INSPECTION RECORD TEST LOG	PAGE OF
EDIT II-1 D2-13308 Vol.2	P/G 0000001 P/G Test Set 002			PAGE SER. NO.	1 2

MODEL NO.	TEST ITEM SER. NO.	WORK ORDER NO.	AUTHORITY	PLANNING BUDGET VERIFICATION	DATE
WS 133A		78105	EWA 08-956		3/17/6

TIME	CONDITION NO.	WORK ITEM NO.		REF E.R. SER. NO.	OPERATION COMPLETION SHOP	INSP.	ENGR.
1400			Recalibration of P/G Test Set	E31434			DM
			Note: Resetting of Evaluator D				
			in P/G Test set for wider				
			tolerances of P/G Phase Supply				
			rise Time, pulse width and				
			repitition rate. acceptance.				
1825			Completed Recalibration OK.				DM
		Vol. 2 Sec. 2 T2-2548 Page 12					

PAGE OF	JOB NUMBER		PART NUMBER	NOMENCLATURE	LEAD INSP. STAMP	LEAD INSP. DATE	INSP. REG. STAMP	INSP. REG. DATE	CUS
	61347	TC	25-22036-70 25-29278-2	Programmer Group (P/G) P/G Test Set					

U3 4400 5605 ORIG. 6/60

19-

TEST NUMBER	UNIT SERIAL NUMBER	TEST PLANNING BY	TEST PLANNING DATE	MANUFACTURING AND INSPECTION RECORD TEST LOG	PAGE	OF
EDIT II-1 D2-13308 Vol.2	P/G000000001 P/G Test Set 002			PAGE SER. NO.	1	2

MODEL NO.	SER. NO.	WORK ORDER NO.	AUTHORITY	PLANNING BUDGET VERIFICATION	DATE
WS 133A		78105	EWA 08-956		3/19/

TIME	CONDITION NO.	WORK ITEM NO.		REF E. R. SER. NO.	OPERATION COMPLETION SHOP	INSP.	ENGR.
0000			Start-up at 0687.5 Hrs. on elapsed time meter				Dm
1010			3.2.2.3 A Phase Supply Voltage Test (Completed) OK (page 4) Note: Cards -106 and -107 were re-programmed.				Dm
1100			3.2.4.0 A End-to-End Tests (page 5) (Completed) OK. Note: Card-218 war re-programmed and card-228 was corrected by re-calibration of P/G Test Set. (page 10)				Dm
		Vol. 2 Sec. 2 T2-2548 Page 13					

PAGE	OF	JOB NUMBER		PART NUMBER	NOMENCLATURE	LEAD INSP. STAMP	LEAD INSP. DATE	INSP. REG. STAMP	INSP. REG. DATE	CUS.
		61347 U3 4400 5605 ORIG. 6/60	TC	25-22036-70 25-29278-2	Programmer Group (P/G) P/G Test Set					

86

TEST NUMBER	UNIT SERIAL NUMBER	TEST PLANNING BY	TEST PLANNING DATE	MANUFACTURING AND INSPECTION RECORD TEST LOG	PAGE OF
EDIT II-1 D2-13308 Vol. 2	P/G 0000001 P/G Test Set 002			PAGE SER. NO.	2

MODEL NO.	SER. NO.	WORK ORDER NO.	AUTHORITY	PLANNING BUDGET VERIFICATION	DATE
WS 133 A		78105	EWA 08-956		3-19-6

TIME	CONDITION NO.	WORK ITEM NO.		REF E. R. SER. NO.	OPERATION COMPLETION SHOP	INSP.	ENGR.
1130			3.2.5.0A Timer Sequential Drawer Test page 6 (Completed) OK				DM
			Note: Formerly Launch Drawer No. 1 Test.				
			Note: Cards -120, -121, -126, -127, -128 and -137 resulted in Go's. Trouble was Φ voltage tests which have been re calibrated. page 10.				
1145			3.2.6.0A Programmer Launch Sequence Drawer Test page 6 (Completed) Ok.				DM
		Vol. 2 Sec. 2 M2-2548 Page 14	Note: Formerly Launch Drawer No. 2 Test.				
			Note: Card -155 was re-programmed at resulted in a Go.				

PAGE OF	JOB NUMBER	PART NUMBER	NOMENCLATURE	LEAD INSP. STAMP	LEAD INSP. DATE	INSP. REG. STAMP	INSP. REG. DATE	CUS.
	61347	25-22036-70 25-29278-2	Programmer Group (P/G) P/G Test Set					

U3 4400 5605 ORIG. 5/60

65

TEST NUMBER	UNIT SERIAL NUMBER	TEST PLANNI. BY	TEST PLANNI. DATE	MANUFACTURING AND INSPECTION RECORD TEST LOG	PAGE	OF
EDIT II-1 D2-13308 Vol 2	P/G 0000001 P/G Test Set 002			PAGE SER. NO.	1	2

TEST ITEM MODEL NO.	SER. NO.	WORK ORDER NO.	AUTHORITY	PLANNING BUDGET VERIFICATION	DATE
WS 133A		78105	EWA 08-956		3/19/

TIME	CONDITION NO.	WORK ITEM NO.		REF E. R. SER. NO.	OPERATION COMPLETION SHOP	INSP.	ENGR.
1200			3.2.7.0A Programmer Calibrator Test Drawer Test (page 7) (Completed) OK				DM
			Note: Formerly Sequence Drawer Test				
			Note: Cards resulting in No-Go's were changed To Go's by re-calibration of The P/G Test Set (page 10)				
1230		Vol. 2 Sec. 2 T2-2548 Page 15	3.2.8.0A Monitor Launcher Missile Status Drawer Test. (page 7) (Completed) OK				DM
			Note: Formerly Monitor Drawer Test.				
			Note: Cards resulting in No-Go's were change To Go's by re-calibration (page 10)				

PAGE	OF	JOB NUMBER	PART NUMBER	NOMENCLATURE	LEAD INSP. STAMP	LEAD INSP. DATE	INSP. REG. STAMP	INSP. REG. DATE	CUS.
		61347	25-22036-70	Programmer Group (P/G)					
			25-29278-2	P/G Test Set					

U3 4400 5605 ORIG. 6/60

09

TC. NUMBER	UNIT SERIAL NUMBER	TEST PLANNING BY	TEST PLANNING DATE	MANUFACTURING AND INSPECTION RECORD TEST LOG	PAGE	OF
EDIT II-1 D2-13308 Vol. 2	P/G 0000001 P/G Test Set 002			PAGE SER. NO.		2

TEST ITEM MODEL NO.	SER. NO.	WORK ORDER NO.	AUTHORITY	PLANNING BUDGET VERIFICATION	DATE
WS 133A		78105	EWA 08-956		3/20

TIME	CONDITION NO.	WORK ITEM NO.		REF E. R. SER. NO.	OPERATION COMPLETION SHOP	INSP.	ENGR.
1100			3.2.2.0 A Voltage Level Check (page 4) (Completed) OK				JDm
1105			3.2.3.0 B (Completed) OK				JDm
1120			3.2.4.0 B (Completed) OK				JDm
1130			3.2.5.0 B (Completed) OK				JDm
1140			3.2.6.0 B (Completed) OK				JDm
1200			3.2.7.0 B (Completed) OK				JDm
1220			3.2.8.0 B (Completed) OK				JDm

Vol. 2 Sec. 2 T2-2548 Page 16

PAGE OF	JOB NUMBER	PART NUMBER	NOMENCLATURE	LEAD INSP. STAMP	LEAD INSP. DATE	INSP. REG. STAMP	INSP. REG. DATE	CUS.
	61347	25-22036-70	Programmer Group P/G					
		25-29278-2	P/G Test set					

U3 4400 5605 ORIG. 6/60

19

T. NUMBER	UNIT SERIAL NUMBER	TEST PLANNING BY	TEST PLANNING DATE	MANUFACTURING AND INSPECTION RECORD TEST LOG	PAGE	OF
EDIT II-1 D2-13308 Vol. 2	P/G 0000001 P/G Test Set 002			PAGE SER. NO.	1	2

TEST ITEM MODEL NO.	SER. NO.	WORK ORDER NO.	AUTHORITY	PLANNING BUDGET VERIFICATION	DATE
WS 133A		78105	EWA 08-956		3-20-6

TIME	CONDITION NO.	WORK ITEM NO.		REF E. R. SER. NO.	OPERATION COMPLETION SHOP	INSP.	ENGR.
1300			3.2.3.0 C (Completed) OK				JM
1330			3.2.4.0 C (Completed) OK				JM
1345			3.2.5.0 C (Completed) OK				JM
1400			3.2.6.0 C (Completed) OK				JM
1415			3.2.7.0 C (Completed) OK				JM
1430			3.2.8.0 C (Completed) OK				JM
1500		Vol. 2 Sec. 2	3.2.3.0 D (Completed) OK				JM
1515		T2-2548 Page 17	3.2.4.0 D (Completed) OK				JM
1530			3.2.5.0 D (Completed) OK				JM

PAGE OF	JOB NUMBER	PART NUMBER	NOMENCLATURE	LEAD INSP. STAMP	LEAD INSP. DATE	INSP. REG. STAMP	INSP. REG. DATE	CUS.
	61347	25-22036-70 25-29278-2	Programmer Group (P/G) P/G Test Set					

U3 4400 5605 ORIG. 6/60

29 -

TEST NUMBER	UNIT SERIAL NUMBER	TEST PLANNING BY	TEST PLANNING DATE	MANUFACTURING AND INSPECTION RECORD TEST LOG	PAGE	OF
EDIT II-1 D2-13308 Vol.2	P/G 0000001 P/G Test Set 002			PAGE SER. NO.	1	2

TEST ITEM MODEL NO.	TEST ITEM SER. NO.	WORK ORDER NO.	AUTHORITY	PLANNING BUDGET VERIFICATION	DATE
WS 133A		78105	EWA 08-956		3/20

TIME	CONDITION NO.	WORK ITEM NO.		REF E. R. SER. NO.	OPERATION COMPLETION SHOP	INSP.	ENGR.
1545			3.2.6.0D Completed OK				DM
1600			3.2.7.0D Completed OK				DM
1630			3.2.8.0D Completed OK				DM
		Vol. 2 Sec. 2 D2-2548 Page 18					

PAGE OF	JOB NUMBER	PART NUMBER	NOMENCLATURE	LEAD INSP. STAMP	LEAD INSP. DATE	INSP. REG. STAMP	INSP. REG. DATE	CUS.
	61347	25-22036-70	Programmer Group (P/G)					
		25-29278-2	P/G Test Set					

US 4400 5605 ORIG. 6/60

E9 -

TEST NUMBER	UNIT SERIAL NUMBER	TEST PLANNING BY	TEST PLANNING DATE	MANUFACTURING AND INSPECTION RECORD TEST LOG	PAGE OF
EDIT II-1 D2-13308 Vol 2	P/G 0000001 P/G Test Set 002			PAGE SER. NO.	1 / 2

MODEL NO.	TEST ITEM SER. NO.	WORK ORDER NO.	AUTHORITY	PLANNING BUDGET VERIFICATION	DATE
WS 133 A		78105	EWA 08-956		3/21/

TIME	CONDITION NO.	WORK ITEM NO.		REF E. R. SER. NO.	OPERATION COMPLETION SHOP.	INSP.	ENGR.
0800			3.2.3.0 E (Completed) OK				JDM
0815			3.2.4.0 E (Completed) OK				JDM
0830			3.2.5.0 E (Completed) OK				JDM
0900			3.2.6.0 E (Completed) OK				JDM
0915			3.2.7.0 E (Completed) OK				JDM
1000			3.2.8.0 E (Completed) OK				JDM
1100		Vol. 2 Sec. 2	3.2.3.0 F (Completed) OK				JDM
1115		M2-2548 Page 19	3.2.4.0 F (completed) OK				JDM
1130			3.2.5.0 F (completed) OK				JDM

PAGE OF	JOB NUMBER	PART NUMBER	NOMENCLATURE	LEAD INSP. STAMP	LEAD INSP. DATE	INSP. REG. STAMP	INSP. REG. DATE	CUS.
	61347	25-22036-70 25-29278-2	Programmer Group (P/G) P/G Test Set					

U3 4400 5605 ORIG. G/GO

19-

TEST NUMBER	UNIT SERIAL NUMBER	TEST PLANNING BY	TEST PLANNING DATE	MANUFACTURING AND INSPECTION RECORD TEST LOG	PAGE	OF
EDIT II-1 D2-13305 Vol.2	P/G 0000001 P/G Test Set 002			PAGE SER. NO.	1	2

MODEL NO.	TEST ITEM SER. NO.	WORK ORDER NO.	AUTHORITY	PLANNING BUDGET VERIFICATION	DATE
WS 133A		78105	EWA 08-956		3/21/6

TIME	CONDITION NO.	WORK ITEM NO.		REF E.R. SER. NO.	OPERATION COMPLETION SHOP	INSP.	ENGR.
1200			3.2.6.0 F (Completed) OK				DM
1215			3.2.7.0 F (Completed) OK				DM
1300			3.2.8.0 F (Completed) OK				DM
		Vol. 2 Sec. 2 T2-2548 Page 20					

PAGE	OF	JOB NUMBER	PART NUMBER	NOMENCLATURE	LEAD INSP. STAMP	LEAD INSP. DATE	INSP. REG. STAMP	INSP. REG. DATE	CUS.
		61347	25-22036-70	Programmer Group (P/G)					
			25-29278-2	P/G Test Set					

U3 4400 5605 ORIG. 6/60

G9

TEST NUMBER	UNIT SERIAL NUMBER	TEST PLANNING BY	TEST PLANNING DATE	MANUFACTURING AND INSPECTION RECORD	PAGE	OF
EDIT II-1 D2-13306 Vol. 2	P/G 0000001 P/G Test Set 002	---		TEST LOG PAGE SER. NO.	1	2

MODEL NO.	TEST ITEM SER. NO.	WORK ORDER NO.	AUTHORITY	PLANNING BUDGET VERIFICATION	DATE
WS 133A		78105	EWA 08-956		3/22/

TIME	CONDITION NO.	WORK ITEM NO.		REF E. R. SER. NO.	OPERATION COMPLETION SHOP	INSP.	ENGR.
0800			3.2.2.0 B (Completed) OK				JDM
0830			3.2.3.0 G (Completed) OK				JDM
0900			3.2.4.0 G (Completed) OK				JDM
0915			3.2.5.0 G (Completed) OK				JDM
0930			3.2.6.0 G (Completed) OK				JDM
0945			3.2.7.0 G (Completed) OK				JDM
1000		Vol. 2 Sec. 2	3.2.8.0 G (Completed) OK				JDM
1100		D2-2548 Page 21	3.2.3.0 H (Completed) OK				JDM
1130			3.2.4.0 H (Completed) OK				JDM

PAGE OF	JOB NUMBER	PART NUMBER	NOMENCLATURE	LEAD INSP. STAMP	LEAD INSP. DATE	INSP. REG. STAMP	INSP. REG. DATE	CUS.
	61347 U3 4400 5605 ORIG. 6/60.	25-22036-70 25-29278-2	Programmer Group (P/G) P/G Test Set					

99-

TEST NUMBER	UNIT SERIAL NUMBER	TEST PLANNING BY	TEST PLANNING DATE	MANUFACTURING AND INSPECTION RECORD	PAGE OF
EDIT II-1 D2-133C8 Vol.2	P/G0000001 P/G Test Set 002			TEST LOG PAGE SER. NO.	2 OF 2

MODEL NO.	TEST ITEM SER. NO.	WORK ORDER NO.	AUTHORITY	PLANNING BUDGET VERIFICATION	DATE
WS 133A		78105	EWA 08-956		3/22/

TIME	CONDITION NO.	WORK ITEM NO.		REF E. R. SER. NO.	OPERATION COMPLETION SHOP	INSP.	ENGR.
1200			3.2.5.0 H (Completed) OK				DM
1215			3.2.6.0 H (Completed) OK				DM
1230			3.2.7.0 H (Completed) OK				DM
1300			3.2.8.0 H (Completed) OK				DM
1330			3.2.3.0 I (Completed) OK				DM
1345			3.2.4.0 I (Completed) OK				DM
1400		Vol. 2 Sec. 2	3.2.5.0 I (Completed) OK				DM
1415		M2-2548 Page 22	3.2.6.0 I (Completed) OK				DM
1430			3.2.7.0 I (Completed) OK				DM

PAGE OF	JOB NUMBER	PART NUMBER	NOMENCLATURE	LEAD INSP. STAMP	LEAD INSP. DATE	INSP. REG. STAMP	INSP. REG. DATE	CUS.
	61347	25-22036-70 25-29278-2	Programmer Group (P/G) P/G Test Set					

U3 4400 5605 ORIG. 6/60

TEST NUMBER	UNIT SERIAL NUMBER	TEST PLANNING BY	TEST PLANNING DATE	MANUFACTURING AND INSPECTION RECORD	PAGE	OF
EDIT II-1 D2-13308 Vol.2	P/G 0000001 P/G Test Set 002			TEST LOG PAGE SER. NO.	2	2

MODEL NO.	TEST ITEM SER. NO.	WORK ORDER NO.	AUTHORITY	PLANNING BUDGET VERIFICATION	DATE
WS 133A		78105	EWA 08-956		3/22/

TIME	CONDITION NO.	WORK ITEM NO.		REF E. R. SER. NO.	OPERATION COMPLETION SHOP	INSP.	ENGR.
1500			3.2.8.0 I (Completed) OK				DM
1530			3.2.3.0 J (Completed) OK				DM
1545			3.2.4.0 J (Completed) OK				DM
1600			3.2.5.0 J (Completed) OK				DM
1630			3.2.6.0 J (Completed) OK				DM
1645			3.2.7.0 J (Completed) OK				DM
1700		Vol. 2 Sec. 2	3.2.8.0 J (Completed) OK				DM
		T2-2546 Page 22					

PAGE OF	JOB NUMBER	PART NUMBER	NOMENCLATURE	LEAD INSP. STAMP	LEAD INSP. DATE	INSP. REG. STAMP	INSP. REG. DATE	CUS.
	61347	25-22036-70	Programmer Group (P/G)					
	U3 4400 5605 ORIG. 6/60	25-29278-2	P/G Test Set					

82

TEST NUMBER	UNIT SERIAL NUMBER	TEST PLANNING BY	TEST PLANNING DATE	MANUFACTURING AND INSPECTION RECORD TEST LOG	PAGE OF
EDIT II-1 D2-13368 Vol 2	P/G 0000001 P/G Test Set 002			PAGE SER. NO.	2 / 2

MODEL NO.	TEST ITEM SER. NO.	WORK ORDER NO.	AUTHORITY	PLANNING BUDGET VERIFICATION	DATE
WS 133A		78105	EWA 08-956		3/24

TIME	CONDITION NO.	WORK ITEM NO.		REF E. R. SER. NO.	OPERATION COMPLETION SHOP	INSP.	ENGR.
1200			3.2.3.0 K (Completed) OK				JM
1230			3.2.4.0 K. (Completed) OK				JM
1300			3.2.5.0 K (Completed) OK				JM
1345			3.2.6.0 K (Completed) OK				JM
1400			3.2.7.0 K (Completed) OK				JM
1500			3.2.8.0 K (Completed) OK				JM
		Vol. 2 Sec. 2					
		T2-2548 Page 24					

PAGE OF	JOB NUMBER	PART NUMBER	NOMENCLATURE	LEAD INSP. STAMP	LEAD INSP. DATE	INSP. REG. STAMP	INSP. REG. DATE	CUS.
	61347	25-22036-70	Programmer Group (P/G)					
		25-29278-2	P/G Test Set					

U3 4400 5605 ORIG. 6/60

69

T. NUMBER	UNIT SERIAL NUMBER	TEST PLANNI BY	TEST PLANNI DATE	MANUFACTURING AND INSPECTION RECORD	PAGE OF
EDIT II-1 D2-13308 Vol.2	P/G 0000001 P/G TEST SET 002			TEST LOG PAGE SER. NO.	2 OF 2

TEST ITEM MODEL NO.	TEST ITEM SER. NO.	WORK ORDER NO.	AUTHORITY	PLANNING BUDGET VERIFICATION	DATE
WS 133A		78 105	EWA 08-956		3-30-62

TIME	CONDITION NO.	WORK ITEM NO.		REF E. R. SER. NO.	OPERATION COMPLETION SHOP	INSP.	ENGR.
			3-30-62				
			THE UNDERSIGNED WERE IN				
			ATTENDANCE AT THE EDIT II-1				
			DEMONSTRATION.				
			Alfred Lanoff STL				
			Paul L. Williams STL				
			Eli Bernard J. Barnard				
		Vol. 2 Sec. 2 TR2-2548 Page 25	Final Shut-down of EDIT II-1				DM
			Sytem at 705.9 Hrs. on				
			elapsed time meter.				

PAGE OF	JOB NUMBER	PART NUMBER	NOMENCLATURE	LEAD INSP. STAMP	LEAD INSP. DATE	INSP. REG. STAMP	INSP. REG. DATE	CUS.
	61347	25-22036-70 25-29278-2	PROGRAMMER GROUP (P/G) P/G TEST SET					

U3 4400 5605 ORIG. 6/60

THE BOEING COMPANY

NUMBER T2-2548 MODEL NO. WS-133A

TITLE Engineering Development Integration Test No. Two (EDIT II-1) - Photographs

PREPARED BY	N. L. Noe	5/4/62
	D.H. Viehouser	5/4/62
SUPERVISED BY	E.G. Helling	5/14/62
APPROVED BY	J.W. Hampton	5/14/62
RELIABILITY APPROVAL		(DATE)

AF 04(647)-289 CONTRACT NO.

5-78105-8640-68956 CHARGE NUMBER

2-5142

SECTION TITLE PAGE U3 4288 0000 REV. 2/61

70

1.0.0 PHOTOGRAPHS

1.0.1 The photographs which follow show the P/G and P/G Test Set. Photograph two shows the Test Set connected to the P/G. The Test Set is in two parts, the power supply for the Test Set being a separate unit. The power supply, shown in photograph two, to the left of the P/G and P/G Test Set, is also used in the P/G Test Set - self-test.

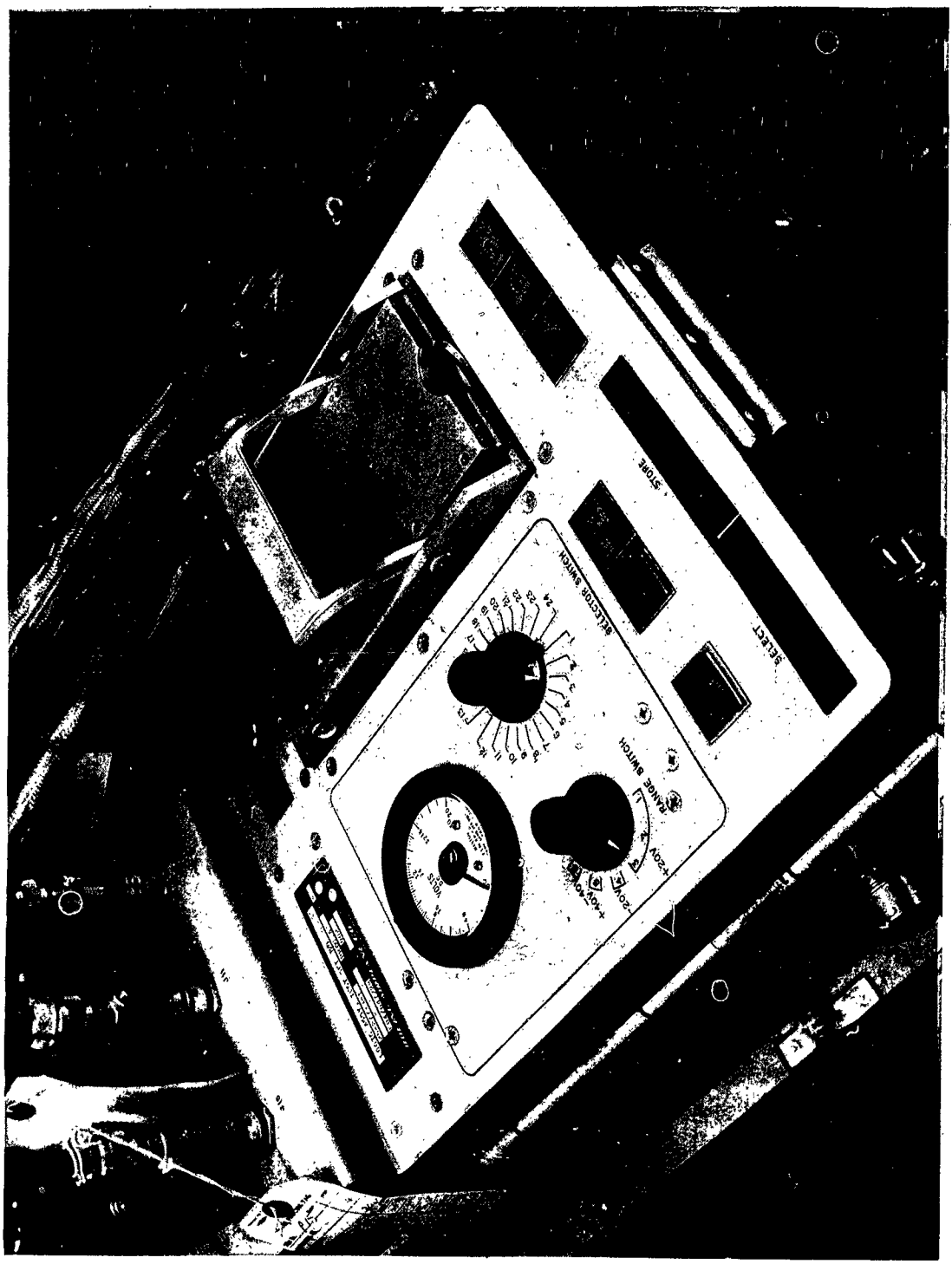

PROGRAMMER GROUP TEST SET (PORTABLE) FIG. A 3092

AN ENGINEER DESIGN EDIT INTERGRATION 2A106466
EDIT TEST EQUIPMENT - 4-3-62

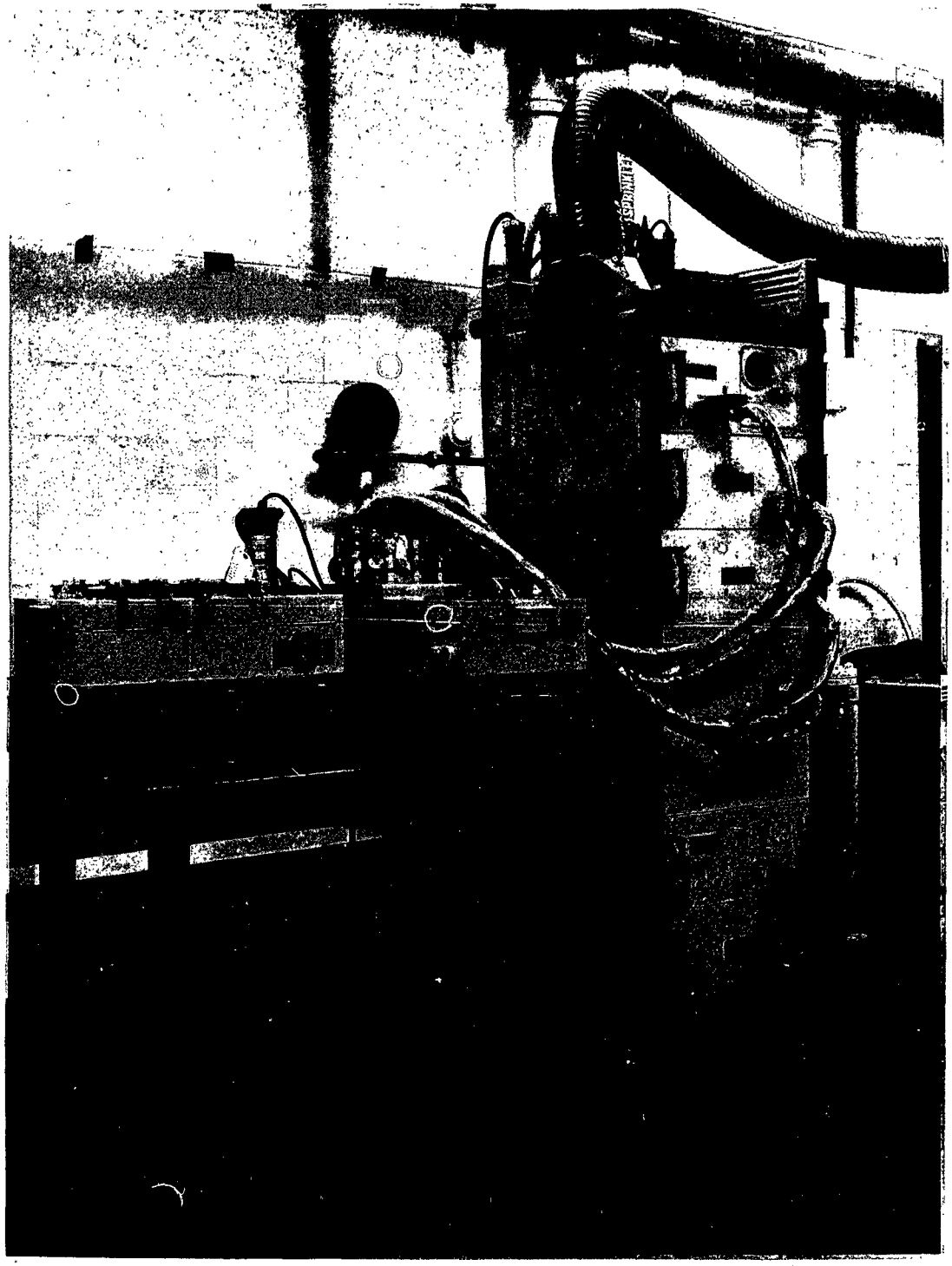

PROGRAMMER GROUP TEST SET & PROGRAMMER GROUP

MINUTEMA ZER DESIGN EDIT INTERGRATION 2A106468
TEST - ED.., ST EQUIPMENT - 4-3-62

73

REVISED _____

U3 4288 2000

THE BOEING COMPANY

NUMBER T2-2548 MODEL NO. WS133A

TITLE Engineering Development Integration

Test No. Two-B (EDIT II-1B) Report

PREPARED BY	D. W. Gladish	2/14/63
SUPERVISED BY	E. G. Helling	3/12/3
APPROVED BY	R. B. Edgar	3/13/3
RELIABILITY APPROVAL		(DATE)

AF 04(647)-289
CONTRACT NO.

5-78105-8640-68956
CHARGE NUMBER

2/22/3

2-5142
SECTION TITLE PAGE U3 4288 0000 REV. 2/61

1.0 PURPOSE

This section presents the test report of the Engineering Development Integration Test number two on Block Change -1 equipment of Operational Configuration -- EDIT II-1B. The test was conducted in accordance with the Test Procedures Document D2-13308, Volume 2, and the EDIT Program Plan D2-13307.

1.1 EQUIPMENT IN TEST

Programmer Group, Fig. A 1201, Ser. No. 0000034

Programmer Group Test Set, Fig. A 3092, Ser. No. 0003

Dummy Decoder Relay Assembly, Fig. A 3113, Ser. No. 0002

Power Supply, Fig. A 4523, Ser. No. 0000001

2.0 SUMMARY

2.1 The Self-Test of the Programmer Group (P/G) Test Set was completed in accordance with paragraph 3.1.0. The tolerances were increased for the voltage check of paragraph 3.1.3.2 (3) at Selector Switch 15 and 18 to allow for diode voltage drops.

Compatibility tests between the P/G and the P/G Test Set had continuous erratic NO-GO's on different cards. Majority of the times the first check would be a NO-GO and additional test gave GO's by opening and closing the Card Reader. All equipment was checked for configuration and functional tests. The Programmer Group had to be functional tested in the -89 configuration, and the P/G Test Set had calibration certification. Erratic NO-GO's

continued after these tests were completed. These conditions were more prevalent on the End-to-End tests than on individual drawer tests. Additional checks were made on the P/G Test Set and it was found that the trouble was in the Card Reader Assembly. A new assembly that passed functional test was installed in the P/G Test Set. The End to End test was performed and all was GO. The complete EDIT II-1 test was performed with all tests GO. The following day we ran through the End-to-End test (60 cards) eight times to obtain performance data on the new Card Reader Assembly. There were three NO-GO's during this test.

No formal demonstration was held for this test by direction of BSD/STL representative. The EDIT II-1 test in March 1962 demonstrated to the customer and BSD/STL that the equipment is compatible.

3.0 REPORT

3.0.1 The EDIT II-1B test was performed according to the Test Procedure Document D2-13308, Volume 2. These procedures and the recorded results are given in paragraph 3.1.0.0 through 3.3.8.3 which follow.

PROCEDURE	ACCEPTABLE DATA	RECORD DATA	COMMENTS
3.1.0.0 P/G TEST SET SELF-TEST PROCEDURES 3.1.1.0 Test Set-Up 3.1.1.1 The P/G Test Set must be isolated from all electronic equipment with the exception of the Test Set Power case. 3.1.1.2 Connect the Fig. A 4523 Distribution Box, and P/G Test Set, as shown in Figure 3.1.1.2-4.		OK	

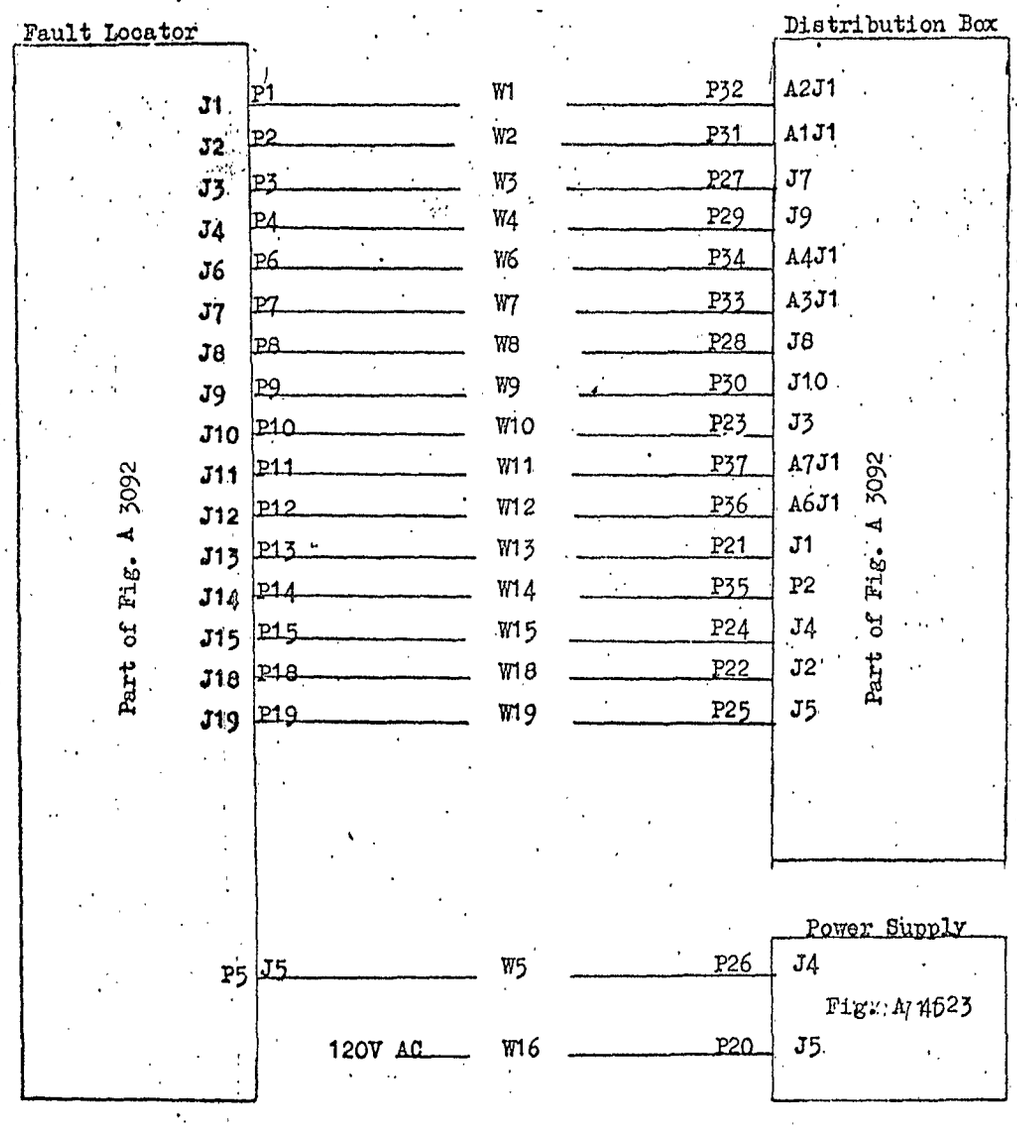

Self-Test of P/G Test Set Connection

Figure 3.1.1.2-4

PROCEDURE	ACCEPTABLE DATA	RECORD DATA	COMMENTS
3.1.1.3 Connect power cable to 120 volt, 60 cps outlet.			
3.1.1.4 Press the TEST SET POWER ON switch on the Test Set. NOTE: The Test Set must be ON for 30 seconds before running any card tests.	TEST SET POWER ON lamp turns ON. The AFS ALARM and W/H ALARM lamps turn ON. The WARNING lamp starts flashing at 4 cps. These conditions exist until the 13th card.	OK OK OK	
3.1.1.5 Press the P/G POWER ON switch.	P/G POWER ON lamp ON.	OK	

PROCEDURE	ACCEPTABLE DATA	RECORD DATA	COMMENTS
3.1.2.0 CARD TESTS 3.1.2.1 Remove program cards from the card container as required by the procedures and insert in UNTESTED CARDS slot of Test Set. 3.1.2.2 Insert selected punched cards, as called out by this procedure; in the Test Set CARD READER face up and beveled corner out. Pull CARD READER HANDLE fully back to engage electrical contacts.			

PROCEDURE	ACCEPTABLE DATA	RECORD DATA	COMMENTS
3.1.2.3			
Push START TEST button on the Test Set.	START TEST lamp ON.	OK	
NOTE: The START TEST switch must be held down until the START TEST lamp turns ON.			
3.1.2.4			
GO or NO-GO lamp will illuminate and the	TEST IN PROCESS lamp OFF.	OK	
TEST IN PROCESS lamp will go OFF.	GO or NO-GO lamp ON.	OK	
NOTE: Additional instructions, when needed, are given for each card test.			
3.1.2.5			
Record each test result in appropriate column allocated for each card or voltage test in this document.			

PROCEDURE	ACCEPTABLE DATA	RECORD DATA	COMMENTS
3.1.2.6 Push card reader handle, remove card and place it in the TESTED CARD slot.			
3.1.2.7 Repeat paragraphs 3.1.2.1 thru 3.1.2.6 for each succeeding test.			
3.1.3.0 SELF-TEST 3.1.3.1 Select punched cards (25-30947-125 thru 25-30947-147) for self-test of the Test Set.			

PROCEDURE	ACCEPTABLE DATA	RECORD DATA	COMMENTS
3.1.3.2 Follow paragraphs 3.1.2.1 thru 3.1.2.7 starting with card 25-30947-125.			
(1) Card 25-30947-125. After the GO lamp is ON, set the Range Switch at 3, and rotate the Selector Switch successively through the positions indicated in Table 3.1.3.2-4. Read the voltmeter at each position of the Selector Switch.	GO lamp ON. The voltmeter shall read 10 ± 0.5 volts at each setting of the Selector Switch.	OK See Table 3.1.3.2-4	
(2) Card 25-30947-126. Follow same procedure as number 1 above.	NO-GO lamp ON. The voltmeter shall read 10 ± 0.5 volts at each setting of the Selector Switch except at position 14 which read 0 ± 0.5 volts.	OK See Table 3.1.3.2-4	

Table 3.1.3.2-4

Voltmeter Switching Requirements Self-Test Procedure

Selector Switch Position	Card-125 Accept. Volts	Card-125 Volts Read	Card-126 Accpt. Volts	Card-126 Volts Read	Card-127 Accpt. Volts	Card-127 Volts Read	Card-128 Accpt. Volts	Card-128 Volts Read
1	10 ± 0.5V	10.0V	10 ± 0.5V	10.0V	10 ± 0.5V	10.0V	—	
2	↕	↕	↕	↕	↕	↕	—	
3							—	
4							—	
5							—	
6							—	
7							—	
8							10 ± 0.5 V	10.0V
9							—	
10							10 ± 0.5 V	10.0V
11								
12	10 ± 0.5 V	10.0V						
13	—		10 ± 0.5 V	10.0V	10 ± 0.5 V	10.0V		
14	10 ± 0.5 V	10.0V	0 ± 0.5 V	0.0V	—			
15	↕	↕	10 ± 0.5 V	10.0V	10 + 0.5 V - 1.1	−9.35V		
16			↕	↕				
17	10 ± 0.5 V		10 ± 0.5 V	10.0V	—			
18	10 ± 0.5 V	10.0V	—		10 + 0.5 V - 1.1	−9.35V		

R

R

REVISED 2/22/63
BOEING VOL 2 NO. T2-2548
SEC 4 PAGE 11

PROCEDURE	ACCEPTABLE DATA	RECORD DATA	COMMENTS
3.1.3.2 (Continued)			
(3) Card 25-30947-127. Follow same procedure as number (1) above.	GO lamp ON. The voltmeter shall read 10 ± 0.5 volts on selector switch positions 1 thru 13. Position 15 & 18 shall read $10^{+0.5}_{-1.1}$V	OK See Table 3.1.3.2-4	
(4) Card 25-30947-128. Follow same procedure as number (1) above.	NO-GO lamp ON. The voltmeter shall read 10 ± 0.5 volts at each setting of the Selector Switch.	OK OK See Table 3.1.3.2-4	
(5) Card 25-30947-129. NOTE: This test requires 66 seconds for completion.	GO lamp ON	OK	
(6) Card 25-30947-130	GO lamp ON.	OK	

PROCEDURE	ACCEPTABLE DATA	RECORD DATA	COMMENTS
3.1.3.2 (Continued)			
(7) Card 25-30947-131	NO-GO lamp ON.	OK	
(8) Card 25-30947-132	GO lamp ON.	OK	
(9) Card 25-30947-133	GO lamp ON.	OK	
(10) Card 25-30947-134	NO-GO lamp ON.	OK	
(11) Card 25-30947-135	GO lamp ON.	OK	
	The stepping switch will scan 4 times during test with an audible pause between scans.	OK	
Repeat test but this time push the P/G POWER OFF switch during first scan of stepping switch.	NO-GO lamp ON.	OK	

PROCEDURE	ACCEPTABLE DATA	RECORD DATA	COMMENTS
3.1.3.2 (Continued)			
(12) Card 25-30947-136	GO lamp ON.	OK	
(13) Card 25-30947-137.	GO lamp ON.	OK	
Repeat test, but this time push the P/G POWER OFF switch during test.	NO-GO lamp ON. The W/H ALARM, AFS ALARM and WARNING lamps will turn OFF when the P/G POWER OFF switch is depressed. The lamps will turn back ON when switch is released.	OK OK	
(14) Card 25-30947-138.	GO lamp ON. The AFS ALARM lamp turns OFF during test.	OK	

PROCEDURE	ACCEPTABLE DATA	RECORD DATA	COMMENTS
3.1.3.2 (Continued)			
(15) Card 25-30947-139. Initiate test and observe the START TEST, AFS SAFETY, W/H ALARM, and WARNING lamps.	The following events take place:		
	A. Shortly after pressing the START TEST switch:		
	(1) The AFS ALARM lamp turns OFF momentarily.	OK	
	(2) The START TEST lamp turns ON.	OK	
	B. After the START TEST lamps turns ON:		
	(1) The W/H ALARM turns OFF.	OK	
	(2) The WARNING lamp starts flashing at 25% duty cycle.	OK	

PROCEDURE	ACCEPTABLE DATA	RECORD DATA	COMMENTS
3.1.3.2 (Continued			
(15) (Continued)	C. When the W/H ALARM turns OFF, the AFS ALARM lamp starts flashing at 8 cps.	OK	
	D. When the stepping switch starts to scan, the W/H ALARM lamp turns ON, the AFS ALARM lamp goes back to steady ON state, and the WARNING lamp resumes flashing at 4 cps.	OK OK OK	
	GO lamp ON.	OK	
(16) Card 25-30947-140	NO-GO lamp ON.	OK	
(17) Card 25-30947-141	GO lamp ON.	OK	

PROCEDURE	ACCEPTABLE DATA	RECORD DATA	COMMENTS
(18) Card 25-30947-142	GO lamp ON.	OK	
(19) Card 25-30947-143	GO lamp ON.	OK	
(20) Card 25-30947-144	GO lamp ON.	OK	
	The W/H ALARM, AFS ALARM and WARNING lamps will turn OFF when the card reader handle is operated UP.	OK	
	The START TEST lamp turns ON.	OK	
	When the stepping switch starts its scan, the lamps will turn back ON.	OK	
	AFS alarm OFF.	OK	
(21) Card 25-30947-145	GO lamp ON.	OK	
(22) Card 25-30947-146		OK	
(23) Card 25-30947-147	GO lamp ON.	OK	

PROCEDURE	ACCEPTABLE DATA	RECORD DATA	COMMENTS
3.2.0.0 COMPATIBILITY TEST OF P/G WITH THE P/G TEST SET. 3.2.1.0 Test Set-Up. 3.2.1.1 The P/G must be isolated from all electronic equipment with the exception of its SOURCE POWER SUPPLY and associated P/G Test Set equipment. 3.2.1.2 Apply cooling air to P/G (Ref. 2.1.2). 3.2.1.3 Make the cable connections shown in Figure 3.2.1.3-4.			

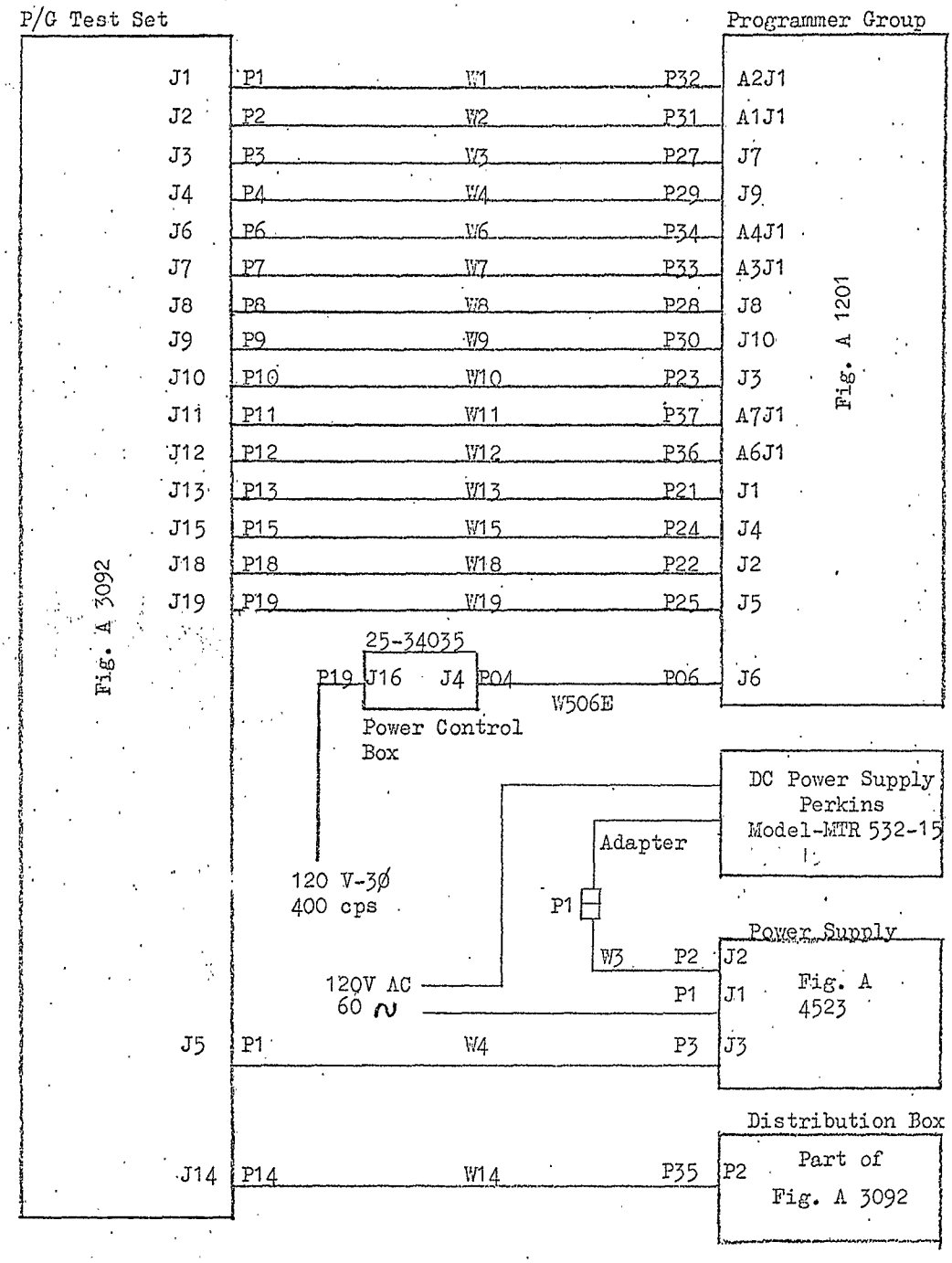

Compatibility Test of P/G with P/G Test Set

Figure 3.2.1.3-4

U3 4288 2000 REV. 8/62

2-5142-2

REV SYM 3/22/63

PROCEDURE	ACCEPTABLE DATA	RECORD DATA	COMMENTS
3.2.1.4 The Dummy Decoder is inserted into Launch Drawer No. 1 of the P/G.			
3.2.1.5 Press the TEST SET POWER ON switch. NOTE: The MONITOR POWER ON lamp on the P/G will have been ON continuously during preceding tests. It will remain On until the main LF circuit breaker is tripped OFF to replace a faulty P/G drawer.	TEST SET POWER ON lamp ON.	OK	

PROCEDURE	ACCEPTABLE DATA	RECORD DATA	COMMENTS
3.2.2.0 VOLTAGE LEVEL CHECK			
3.2.2.1 P/G Monitor Power ON Only			
3.2.2.2 Measure the voltages at the Range and Selector positions on the Test Set as specified in Table 3.2.2.2-4. Record the results of each test on specified Table.	See Table 3.2.2.2-4.		
3.2.2.3 Press the P/G POWER ON switch.	P/G POWER ON lamps ON.	OK	
3.2.2.4 Measure the voltages at the Range and Selector positions on the Test Set as specified in Table 3.2.2.4-4. Record the results of each test on specified table.	See Table 3.2.2.4-4.		

SELECTOR	RANGE											
	+ 20 Volts DC						-20 V DC		+ 40 VDC		- 40 VDC	
	1	1	2	2	3	3	4	4	5	5	6	6
	Accept Volts	Volts Read	Accept Volts	Volts Read	Accept Volts	Volts Read	Accept Volts	Volts Read	Accept Volts	Volts Read	Accept Volts	Volts Read
1	0 to 2	0	0 to 2	0	0 to 2	0	0 to 2	0	0 to 5	0.8	0 to 5	0.5
2	0 to 0.5	0.25					0 to 0.5	0	28 ± 1	28		
3	10 ± 0.5	10.0					10 ± 0.5	10.1	0 to 0.5	0		
4	0 to 0.5	0.25					0 to 0.5	0	28 ± 1	28		
5	10 ± 0.5	10.0					10 ± 0.5	10.0	0 to 0.5	0		
6	0 to 0.5	0					0 to 0.5	0	0 to 0.5	0		
7	10 ± 0.5	10.1					10 ± 0.5	10.3	28 ± 1	28.5		
8	0 to 0.5	0					0 to 0.5	0	0 to 0.5	0		
9	10 ± 0.5	10.0					10 ± 0.5	10.0	28 ± 1	27.5		
10	10 ± 0.5	10.0					0 to 0.5	0	0 to 0.5	0		
11	0 to 0.5	0					10 ± 0.5	10.2	28 ± 1	28.1		
12	11.5±0.5	11.7	0 to 2	0			17.5±2.5	17.5	28 ± 1	28.0		
13	17 ± 2	17.5					17.5±2.5	17.7	36 ± 3	35.0		
14	17 ± 2	17.5							36 ± 3	35.1		
15	17 ± 2	17.5										
16	17 ± 2	17.5										
17												
18					0 to 2	0						

Table 3.2.2.2-4 P/G Monitor Power ON Voltage Check

SELECTOR	RANGE: + 20 Volts DC						-20 VDC		+ 40 VDC		- 40 VDC	
	1	1	2	2	3	3	4	4	5	5	6	6
	Accept Volts	Volts Read	Accept Volts	Volts Read	Accept Volts	Volts Read	Accept Volts	Volts Read	Accept Volts	Volts Read	Accept Volts	Volts Read
1	10 ± 0.5	10.0	10.5±0.5	10.4	10.5±0.5	10.5	10.5±0.5	10.6	28 ± 1	28.0	30 ± 1	30.0
2												
3												
4												
5												
6												
7												
8												
9												
10												
11	10 ± 0.5	10.0					10 ± 0.5	10.6				
12	11.5±0.5	11.5	10.5±0.5	10.4			17.5±2.5	18.0	28 ± 1	28.0		
13	17 ± 2	17.0					17.5±2.5	18.0	36 ± 3	36.0		
14	17 ± 2	17.0							36 ± 3	36.0		
15	17 ± 2	17.0										
16	17 ± 2	17.0										
17												
18												

Table 3.2.2.4-4 P/G Monitor and Test Power ON Voltage Check

PROCEDURE	ACCEPTABLE DATA	RECORD DATA	COMMENTS
3.2.3.0 PHASE SUPPLY VOLTAGE TEST			
3.2.3.1 Select punched cards (25-31059-106 thru 25-31059-110) to check the phase supply voltage in each of the five drawers.			
3.2.3.2 Follow paragraphs 3.1.2.1 thru 3.1.2.7 of this volume starting with card 25-31059-106. NOTE: For more detail on function of these cards, see D2-12636, Volume I.			
(1) 25-31059-106 NOTE: This test shall be performed prior to any other test.	GO lamp ON	OK	

PROCEDURE	ACCEPTABLE DATA	RECORD DATA	COMMENTS
(2) 25-31059-107	GO lamp ON	OK	
(3) 25-31059-108		OK	
(4) 25-31059-109		OK	
(5) 25-31059-110	GO lamp ON	OK	
3.2.4.0			
<u>END TO END TEST</u>			
3.2.4.1			
Select punched cards (25-26642-165 thru 25-26642-232) for End-to-End Test.			

PROCEDURE	ACCEPTABLE DATA	RECORD DATA	COMMENTS
3.2.4.2			
Follow paragraphs 3.1.2.1 thru 3.1.2.7 of this volume and additional instructions stated in the procedure for each card, starting with card 25-26642-165.			
NOTE: For more detail on function of these cards, see D2-12636, Volume II.			
(1) 25-26642-165	GO lamp ON	OK	
(2) 25-26642-166		OK	
(3) -168		OK	
(4) -169		OK	
(5) -170		OK	
(6) -171		OK	
(7) -172		OK	
(8) -173		OK	
(9) -174		OK	
(10) 25-26642-175	GO lamp ON	OK	

PROCEDURE	ACCEPTABLE DATA	RECORD DATA	COMMENTS
3.2.4.2 (Continued)			
(11) 25-26642-176	GO lamp ON.	OK	
(12) -177			
(13) -178			
(14) -180			
(15) -181			
(16) -182			
(17) -183			
(18) -184			
(19) -185			
(20) -187			
(21) -188			
(22) -189			
(23) -190			
(24) -191			
(25) -193			
(26) 25-26642-194	GO lamp ON.	OK	

PROCEDURE	ACCEPTABLE DATA	RECORD DATA	COMMENTS
3.2.4.2 (Continued)			
(27) 25-26642-195	GO lamp ON.	OK	
(28) -196			
(29) -197			
(30) -198			
(31) -199			
(32) -200			
(33) -201			
(34) -204			
(35) -205			
(36) -206			
(37) -207			
(38) -208			
(39) -209			
(40) -210			
(41) -211			
(42) -214			
(43) 25-26642-215	GO lamp ON.	OK	

PROCEDURE	ACCEPTABLE DATA	RECORD DATA	COMMENTS
3.2.4.3 Card 25-26642-216			
3.2.4.4 Select punched card 25-26642-216			
3.2.4.5 Follow paragraph 3.1.2.2			
3.2.4.6 Wait 40 ± 2 minutes and then push START TEST button.	NO-GO lamp ON.	OK	
3.2.4.7 Open and close the card reader and wait another 10 ± 2 minutes; then push TEST START button.	GO lamp ON.	OK	

PROCEDURE	ACCEPTABLE DATA	RECORD DATA	COMMENTS
3.2.4.8 Card 25-26642-217			
3.2.4.9 Select punched card 25-26642-217.			
3.2.4.10 Follow paragraph 3.1.2.2.			
3.2.4.11 Depress the SHUT DOWN LAUNCH FACILITY button on the P/G. CONTINUE TO HOLD BUTTON DOWN THROUGHOUT THIS CARD TEST. Release only after GO or NO-GO is received.			
3.2.4.12 Press Test Start Switch Follow paragraphs 3.1.2.3 thru 3.1.2.6.	GO lamp ON.	OK	

PROCEDURE	ACCEPTABLE DATA	RECORD DATA	COMMENTS
3.2.4.13 Card 25-26642-218.			
3.2.4.14 Select punched card 25-26642-218.			
3.2.4.15 Follow paragraph 3.1.2.2.			
3.2.4.16 Depress the P/G POWER OFF switch of the Test Set to initiate shut down. KEEP DEPRESSED FOR DURATION OF TEST.			

PROCEDURE	ACCEPTABLE DATA	RECORD DATA	COMMENTS
3.2.4.17			
Follow paragraphs 3.1.2.3 thru 3.1.2.6.	GO lamp ON.	OK	
NOTE: To start up after the foregoing test, depress P/G POWER ON switch.			
3.2.4.18			
Select punched cards (25-26642-219 thru 25-26642-232).			
3.2.4.19			
Follow paragraphs 3.1.2.1 thru 3.1.2.7 of this volume starting with card 25-26642-219.			
(1) 25-26642-219	GO lamp ON.	OK	
(2) -220			
(3) -221			
(4) -222			
(5) 25-26642-223	GO lamp ON.	OK	

PROCEDURE	ACCEPTABLE DATA	RECORD DATA	COMMENTS
(6) 25-26642-224	GO lamp ON.	OK	
(7) -225			
(8) -226			
(9) -227			
(10) -228			
(11) -229			
(12) -230			
(13) -231			
(14) 25-26642-232	GO lamp ON.	OK	
3.2.5.0			
TIMER SEQUENTIAL DRAWER TEST			
3.2.5.1			
Select punched cards (25-26643-120 thru 25-26643-138).			

PROCEDURE	ACCEPTABLE DATA	RECORD DATA	COMMENTS
3.2.5.2 Follow paragraphs 3.1.2.1 thru 3.1.2.7 of this volume starting with card 25-26643-120. NOTE: For more detail on function of these cards, see D2-12636, Vol. III.			
(1) 25-26643-120	GO lamp ON.	OK	
(2) -121			
(3) -123			
(4) -124			
(5) -139			
(6) -126			
(7) -127			
(8) -128			
(9) -129			
(10) -130			
(11) 25-26643-131	GO lamp ON.	OK	

R

PROCEDURE	ACCEPTABLE DATA	RECORD DATA	COMMENTS
3.2.5.2 (Continued)			
(12) 25-26643-132	GO lamp ON.	OK	
(13) -133			
(14) -134			
(15) -135			
(16) -136			
(17) -137			
(18) 25-26643-138	GO lamp ON.	OK	
3.2.6.0			
PROGRAMMER LAUNCH SEQUENCE DRAWER TEST			
3.2.6.1			
Select punched cards (25-26644-128 thru 25-26644-164.)			
3.2.6.2			
Follow paragraphs 3.1.2.1 thru 3.1.2.7 of this volume starting with 25-26644-128.			

PROCEDURE	ACCEPTABLE DATA	RECORD DATA	COMMENTS
3.2.6.2 (Continued)			
NOTE: For more detail on function of these cards, see D2-12636, Vol. IV.			
(1) 25-26644-128	GO lamp ON.	OK	
(2) -129			
(3) -130			
(4) -131			
(5) -132			
(6) -133			
(7) -134			
(8) -135			
(9) -136			
(10) -137			
(11) -139			
(12) -140			
(13) -142			
(14) 25-26644-143	GO lamp ON.	OK	

PROCEDURE	ACCEPTABLE DATA	RECORD DATA	COMMENTS
3.2.6.2 (Continued)			
(15) 25-26644-145	GO lamp ON.	OK	
(16) -156			
(17) -157			
(18) -158			
(19) -159			
(20) -160			
(21) -161			
(22) -162			
(23) -163			
(24) 25-26644-164	GO lamp ON.	OK	
3.2.7.0			
PROGRAMMER CALIBRATOR TEST DRAWER TEST			
3.2.7.1			
Select punched cards (25-26645-128 thru 25-26645-157).			

PROCEDURE	ACCEPTABLE DATA	RECORD DATA	COMMENTS
3.2.7.2 Follow paragraphs 3.1.2.1 thru 3.1.2.7 of this volume, starting with card 25-26645-128. NOTE: For more detail on function of these cards, see D2-12636, Vol. V. (1) 25-26645-128 (2) -129 (3) -130 (4) -131 (5) -132 (6) -133 (7) -134 (8) -135 (9) -136 (10) -137 (11) 25-26645-138	GO lamp ON ↕ GO lamp ON	↓ OK	

PROCEDURE	ACCEPTABLE DATA	RECORD DATA	COMMENTS
3.2.7.2 (Continued)			
(12) 25-26645-139	GO lamp ON.	OK	
(13) -140			
(14) -141			
(15) -142			
(16) -143			
(17) -144			
(18) -145			
(19) -146			
(20) -147			
(21) -148			
(22) -149			
(23) -150			
(24) -151			
(25) -152			
(26) 25-26645-153	GO lamp ON.	OK	

PROCEDURE	ACCEPTABLE DATA	RECORD DATA	COMMENTS
3.2.7.2 (Continued)			
(27) 25-26645-154	GO lamp ON.	OK	
(28) -155			
(29) -156			
(30) 25-26645-157	GO lamp ON.	OK	
3.2.8.0			
MONITOR LAUNCHER MISSILE STATUS DRAWER TEST			
3.2.8.1			
Select punched cards (25-26646-137 thru 25-26646-172.)			
3.2.8.2			
Follow paragraphs 3.1.2.1 thru 3.1.2.7 of this volume, starting with card 25-26646-137.			

PROCEDURE	ACCEPTABLE DATA	RECORD DATA	COMMENTS
3.2.8.2 (Continued)			
(1) 25-26646-137	GO lamp ON.	OK	
(2) -139			
(3) -140			
(4) -141			
(5) -142			
(6) -143			
(7) -144			
(8) -145			
(9) -146			
(10) -148			
(11) -150			
(12) -153			
(13) -154			
(14) -155			
(15) -156			
(16) -157			
(17) 25-26646-158	GO lamp ON.	OK	

PROCEDURE	ACCEPTABLE DATA	RECORD DATA	COMMENTS
3.2.8.2 (Continued)			
(18) 25-26646-159	GO lamp ON.	OK	
(19) -160			
(20) -162			
(21) -163			
(22) -164			
(23) -165			
(24) -166			
(25) -167			
(26) -168			
(27) -169			
(28) -170			
(29) -171			
(30) 25-26646-172	GO lamp ON.	OK	
3.3.8.3			
Test complete.			

4.0 CONCLUSION

4.1 The EDIT II-1B test demonstrated that the operational configuration of the Programmer Group, P/G Test Set, Power Supply and Dummy Decoder Relay Assembly are physically, functionally, and electrically compatible. The problem discovered with the Card Reader Assembly in the P/G Test Set is being worked by the design group and packaging group. There are three areas of investigation: (1) Determine performance of the Test Sets delivered to operational sites. (2) Investigate materials and processes used on the Card Reader Assembly. (3) Evaluate the possibility of redesigning the Card Reader Assembly.

THE BOEING COMPANY

NUMBER T2-2548 MODEL NO. VS133A

TITLE Engineering Development Integration

Test No. Two B (EDIT II-1B) Test Log

2-5142

PREPARED BY	D. W. Gladish	2/14/63
SUPERVISED BY	E. G. Helling	3/12/3
APPROVED BY	R. B. Edgar	3/13/3
RELIABILITY APPROVAL		(DATE)

SECTION TITLE PAGE U3 4238 0000 REV. 2/61

AF 04(647)-289
CONTRACT NO.

5-78105-8640-68956
CHARGE NUMBER

2/22/3

1.0 MANUFACTURING & INSPECTION RECORD - TEST LOG

The following M&IR Test Log shows the test results recorded during EDIT II-1B. This EDIT Test was completed on January 17, 1963. Boeing Quality Control verification was not required for the Test Log.

TEST NUMBER	UNIT SERIAL NUMBER	TEST PLANNING BY	TEST PLANNING DATE	MANUFACTURING AND INSPECTION RECORD	PAGE OF
EDIT II-1B D2-13308 VOL. 2	SEE BELOW			TEST LOG PAGE SER. NO.	

MODEL NO.	TEST ITEM SER. NO.	WORK ORDER NO.	AUTHORITY	PLANNING BUDGET VERIFICATION	DATE
WS 133 A		78105	EWA 8956		12/11/6

TIME	CONDITION NO.	WORK ITEM NO.		REF E. R. SER. NO.	OPERATION COMPLETION SHOP	INSP.	ENGR.
			This Test is performed to demonstrate compatibility of Operational Equipment: Programmer Group, Fig. A-1201; Programmer Group Test Set, Fig. A-3092; Dummy Decoder Relay Assembly, Fig. A-3113; Power Supply, Fig. A-4523.				
			The procedures for this Test are in document D2-13308, Volume 2, Section 2.				
			Equipment:				
		M2-2548, Vol. 2 Sec. 5 Page 3	P/G 25-22036-89 Unit 0000034				
			P/G Test Set 25-26725-1 Unit 0003				
			Dummy Decoder Relay Assy 25-26839-12 Unit 0002				
			Power Supply 25-29137-1 Unit 0000001				
			DC Power Supply, Model-TP-15, BAC #521647				
			DC Power Supply, Model-TP-15, USAF #36041, P.F.C. #6492				
			400~ Pwr Control Box 25-34035				

PAGE OF	JOB NUMBER	PART NUMBER	NOMENCLATURE	LEAD INSP. STAMP	LEAD INSP. DATE	INSP. REG. STAMP	INSP. REG. DATE	CUS
1	61347	See Above	COMPATIBILITY TEST					

U3 4400 5605 ORIG. 6/60

TEST NUMBER	UNIT SERIAL NUMBER	TEST PLANNING BY	TEST PLANNING DATE	MANUFACTURING AND INSPECTION RECORD	PAGE	OF
EDIT II-1B D2-13308 Vol. 2				TEST LOG PAGE SER. NO.	2	3

MODEL NO.	TEST ITEM SER. NO.	WORK ORDER NO.	AUTHORITY	PLANNING BUDGET VERIFICATION	DATE
WS-133A		78105	EWA 8956		12/11/6

TIME	CONDITION NO.	WORK ITEM NO.		REF E. R. SER. NO.	OPERATION COMPLETION SHOP	INSP.	ENGR.
0800			Connected EDIT II-1B equipment per Fig. 3.1.1.2-1 in D2-13308, Vol. 2, Sec. 2				[illegible]
		2/02/3					
1100			Performed Self-Test on P/G Test Set				[illegible]
1245			Connected equipment per Fig. 3.2.1.3-1 in D2-13308, Vol. 2, Sec. 2				
			Elapsed Time Meter Reading 0065.6				
			Started Voltage Level Test				[illegible]
1330		T2-2548, Vol. 2 Sec. 5 Page 4	Started End to End Test on cards 25-26642-165 thru -232				
			NO-GO's registered on three cards first time followed by GO's on three sucessive repeats				[illegible]

PAGE	JOB NUMBER	PART NUMBER	NOMENCLATURE	LEAD INSP. STAMP	LEAD INSP. DATE	INSP. REG. STAMP	INSP. REG. DATE	CUS.
2 OF	61347		COMPATIBILITY TEST					

U3 4400 5605 ORIG. 6/60

TEST NUMBER	UNIT SERIAL NUMBER	TEST PLANNING BY	TEST PLANNING DATE	MANUFACTURING AND INSPECTION RECORD TEST LOG	PAGE OF
EDIT II-1B D2-13308 Vol. 2				PAGE SER. NO.	3

MODEL NO.	TEST ITEM SER. NO.	WORK ORDER NO.	AUTHORITY	PLANNING BUDGET VERIFICATION	DATE
WS-133A		78105	EWA 8956		12/11/6

TIME	CONDITION NO.	WORK ITEM NO.		REF E. R. SER. NO.	OPERATION COMPLETION SHOP	INSP.	ENGR.
1415			Started Time Sequential Drawer Test				
			25-26643-120 thru -138				
		2/22/3	All GO's				DW
			Programmer Launch Sequence Drawer Test				
			One NO-GO; three repeats were GO				DW
			Programmer Calibrator Test Drawer Test				
		T2-2548, Vol. 2 Sec. 5 Page 5	Two NO-GO's, three repeats on each card were GO				DW

PAGE OF	JOB NUMBER	PART NUMBER	NOMENCLATURE	LEAD INSP. STAMP	LEAD INSP. DATE	INSP. REG. STAMP	INSP. REG. DATE	CUS.
3	61347		COMPATIBILITY TEST					

U3 4400 5605 ORIG. 6/60

2.2.1

TEST NUMBER	UNIT SERIAL NUMBER	TEST PLANNING BY	TEST PLANNING DATE	MANUFACTURING AND INSPECTION RECORD TEST LOG	PAGE OF
EDIT II-1B D2-13308 Vol. 2				PAGE SER. NO.	3.

TEST ITEM MODEL NO.	SER. NO.	WORK ORDER NO.	AUTHORITY	PLANNING BUDGET VERIFICATION	DATE
WS-133A		78105	EWA 8956		12/12/6

TIME	CONDITION NO.	WORK ITEM NO.		REF E. R. SER. NO.	OPERATION COMPLETION SHOP	INSP.	ENGR.
2830			Started Programmer Calibrator Test Drawer				
			Test 25-26646-137 thru -172				
		2/22/3	Card 25-26646-137 gave NO-GO				
			two repeats gave GO				
1000			D2-13308, Vol. 2, Sec. 2				
			TP 3.2.4				
			NO-GO's that should have been Go.				
		T2-2549, Vol. 2 Sec. 5 Page 6	Cards 25-26642-166				
			-171				
			-189				
			-193				
			-218				
			TP 3.2.5				
1130			Cards 25-26643-120 thru -138				
			All GO				

PAGE 4 OF	JOB NUMBER	PART NUMBER	NOMENCLATURE	LEAD INSP. STAMP	LEAD INSP. DATE	INSP. REG. STAMP	INSP. REG. DATE	CUS.
	61347 U3 4400 5605 ORIG. 6/60		COMPATIBILITY TEST					

TEST NUMBER	UNIT SERIAL NUMBER	TEST PLANNING BY	TEST PLANNING DATE	MANUFACTURING AND INSPECTION RECORD TEST LOG	PAGE OF
EDIT II-1B D2-13308 VOL. 2	—			PAGE SER. NO.	3

TEST ITEM MODEL NO.	SER. NO.	WORK ORDER NO.	AUTHORITY	PLANNING BUDGET VERIFICATION	DATE
V/S133A		78105	EWA 8956		12/12/6

TIME	CONDITION NO.	WORK ITEM NO.		REF E.R. SER. NO.	OPERATION COMPLETION SHOP	INSP.	ENGR.
1300			TP 3.2.6				
			Cards 25-26644-128 thru-164				
		2/22/3	All - GO				DW
1400			TP 3.2.7				
			Cards 25-26645-128 thru -157				
			Card 25-26645-134 Gave NO-GO				DW
1445		M2-2543, Vol. 2 Sec. 5 Page 7	TP 3.2.8				
			Cards 25-26646-137 thru-172				
			All - GO				DW
1515			Repeat TP 3.2.4				
			Cards 25-26642-169				
			-171 NO-GO				
			-173				
			-195				
			-232				DW

PAGE OF	JOB NUMBER	PART NUMBER	NOMENCLATURE	LEAD INSP. STAMP	LEAD INSP. DATE	INSP. REG. STAMP	INSP. REG. DATE	CUS.
5	61347		COMPATIBILITY TEST					

U3 4400 S605 ORIG. 6/60

TEST NUMBER	UNIT SERIAL NUMBER	TEST PLANNING BY	TEST PLANNING DATE	MANUFACTURING AND INSPECTION RECORD TEST LOG PAGE SER. NO.	PAGE OF
EDIT II-1B D2-13308 VOL. 2					6 3.

TEST ITEM MODEL NO.	SER. NO.	WORK ORDER NO.	AUTHORITY	PLANNING BUDGET VERIFICATION	DATE
WS133A		78105	EWA 8956		12/12/

TIME	CONDITION NO.	WORK ITEM NO.		REF E. R. SER. NO.	OPERATION COMPLETION SHOP	INSP.	ENGR.
600			TP's 3.2.5, 3.2.6, 3.2.7, & 3.2.8				
			All card tests in these paragraphs				
		2/22/3	gave GO's				[illegible]
		T2-2548, Vol. 2 Sec. 5 Page 8					

PAGE OF	JOB NUMBER	PART NUMBER	NOMENCLATURE	LEAD INSP. STAMP	LEAD INSP. DATE	INSP. REG. STAMP	INSP. REG. DATE	CUS.
6	61347		COMPATIBILITY TEST					

U3 4400 5605 ORIG. 6/60

TEST NUMBER	UNIT SERIAL NUMBER	TEST PLANNING BY	TEST PLANNING DATE	MANUFACTURING AND INSPECTION RECORD TEST LOG PAGE SER. NO.	PAGE OF
EDIT II-1B D2-13308 VOL. 2					6 3.

TEST ITEM MODEL NO.	SER. NO.	WORK ORDER NO.	AUTHORITY	PLANNING BUDGET VERIFICATION	DATE
WS133A		78105	EWA 8956		12/12/

TIME	CONDITION NO.	WORK ITEM NO.		REF E. R. SER. NO.	OPERATION COMPLETION SHOP	INSP.	ENGR.
600			TP's 3.2.5, 3.2.6, 3.2.7, & 3.2.8				
			All card tests in these paragraphs				
		2/22/3	gave GO's				DWC
		T2-2548, Vol. 2 Sec. 5 Page 8					

PAGE OF	JOB NUMBER		PART NUMBER	NOMENCLATURE	LEAD INSP. STAMP	LEAD INSP. DATE	INSP. REG. STAMP	INSP. REG. DATE	CUS.
6	61347			COMPATIBILITY TEST					

U3 4400 5605 ORIG. 6/60

TEST NUMBER	UNIT SERIAL NUMBER	TEST PLANNING BY	TEST PLANNING DATE	MANUFACTURING AND INSPECTION RECORD TEST LOG	PAGE OF
EDIT II-1B D2-13308 Vol. 2	—			PAGE SER. NO.	

MODEL NO.	TEST ITEM SER. NO.	WORK ORDER NO.	AUTHORITY	PLANNING BUDGET VERIFICATION	DATE
WS 133A		78105	EWA 8956		12/13

TIME	CONDITION NO.	WORK ITEM NO.		REF E. R. SER. NO.	OPERATION COMPLETION SHOP	INSP.	ENGR.
0800			TP 3.2.4				
			NO-GO cards 25-26642-219				DW
		2/20/3					
			TP 3.2.5 All Cards GO				DW
			TP 3.2.6 All Cards GO				DW
			TP 3.2.7 All Cards GO				DW
		T2-2548, Vol. 2 Sec. 5 Page 9	TP 3.2.8 All Cards GO				DW
			Repeat TP's 3.2.4 thru 3.2.8				
			NO-GO's TP 3.2.4 25-26642-177				
			-206				
			-209				DW

PAGE 7 OF	JOB NUMBER	PART NUMBER	NOMENCLATURE	LEAD INSP. STAMP	LEAD INSP. DATE	INSP. REG. STAMP	INSP. REG. DATE	CUS
	61347		COMPATIBILITY TEST					

U3 4400 5505 ORIG. 6/60

TEST NUMBER	UNIT SERIAL NUMBER	TEST PLANNING BY	TEST PLANNING DATE	MANUFACTURING AND INSPECTION RECORD TEST LOG	PAGE OF
EDIT II-1B D2-13308 Vol. 2	—			PAGE SER. NO.	

MODEL NO.	TEST ITEM SER. NO.	WORK ORDER NO.	AUTHORITY	PLANNING BUDGET VERIFICATION	DATE
1/S133A		78105	EWA 8956		12/13/

TIME	CONDITION NO.	WORK ITEM NO.		REF E. R. SER. NO.	OPERATION COMPLETION SEC.	INSP.	ENGR
1100			TP 3.2.5 All Cards GO				DW
		2/32/3	TP 3.2.6				
			Card 25-26644-156 -- NO-GO				DW
			TP 3.2.7 All Cards -- GO				DW
			TP 3.2.8 All Cards -- GO				DW
		D2-2548, Vol. 2 Sec. 5 Page 10	Repeat Tests				
			TP 3.2.4 NO-GO Cards 25-26642-184				
			-189				
			-195				
			-196				
			-211				
			-232				DW

PAGE OF	JOB NUMBER	PART NUMBER	NOMENCLATURE	LEAD INSP. STAMP	LEAD INSP. DATE	INSP. REG. STAMP	INSP. REG. DATE	CL
8	61347	—	COMPATIBILITY TEST					

U3 4400 5605 ORIG. 6/60

TEST NUMBER	UNIT SERIAL NUMBER	TEST PLANNING BY	TEST PLANNING DATE	MANUFACTURING AND INSPECTION RECORD TEST LOG	PAGE OF
EDIT II-1B D2-13308 Vol. 2	—			PAGE SER. NO.	

MODEL NO.	TEST ITEM SER. NO.	WORK ORDER NO.	AUTHORITY	PLANNING BUDGET VERIFICATION	DATE
WS133A		78105	EWA 8956		12/13

TIME	CONDITION NO.	WORK ITEM NO.		REF E. R. SER. NO.	OPERATION COMPLETION SHOP	INSP.	ENGR
			TP 3.2.5 NO-GO Card 25-26643-123				DW
		2/22/13	TP 3.2.6 All Cards -- GO				DW
1420			Ray Miller from P/G Test Set design removed bottom cover from Test Set and took out Phase Supply Evaluator cards A-7, A-8, & A-9. This was done to correct NO-GO signals on GO cards. Results -- NO-GO on cards 25-26642-168				
			-171				
			-177				DW
1535			Shut-down all equipment and replaced Fig. A 4523 with ACO 711 Power Supply, Serial No. 0001, Part No. 25-26826-6				
			Results -- NO-GO cards on 25-26642-174				DW

T2-2548, Vol. 2 Sec. 5 Page 11

PAGE OF	JOB NUMBER	PART NUMBER	NOMENCLATURE	LEAD INSP. STAMP	LEAD INSP. DATE	INSP. REG. STAMP	INSP. REG. DATE	CU
9	61347	—	COMPATIBILITY TEST					

U3 4400 5605 ORIG. 6/60

[illegible] EDIT ID 1B D2-13308 Vol. 2	UNIT SERIAL NUMBER —	TEST PLANNING BY / DATE	MANUFACTURING AND INSPECTION RECORD TEST LOG PAGE SER. NO.		PAGE 1 OF 3	
MODEL NO. WS133A	TEST ITEM SER. NO.	WORK ORDER NO. 78105	AUTHORITY EWA 8956	PLANNING BUDGET VERIFICATION	DATE 12/13/6[illegible]	

[illegible]	CONDITION NO.	WORK ITEM NO.		REF E.R. SER. NO.	OPERATION COMPLETION SHOP	INSP.	ENGR.
1610			Brought in the Test Adapter-Programmer Group				
			Test Set, ACO 729, Part No. 25-33642-6				
		2/22/3	Ser. No. 0000005				
			Type 545A Oscilloscope				
			25-26642-177 Card run with ACO 729				
			and scope tied into system				[illegible]
		T2-2548, Vol. 2 Sec. 5 Page 12					

PAGE OF	JOB NUMBER		PART NUMBER	NOMENCLATURE	LEAD INSP. STAMP	DATE	INSP. REG. STAMP	DATE	CUS.
	61347		—	COMPATIBILITY TEST					

U3 4400 5605 ORIG. 6/60

[illegible] JS-1B D2-13303 VOL. 2	UNIT SERIAL NUMBER —	TEST PLANNING BY / DATE	**MANUFACTURING AND INSPECTION RECORD** TEST LOG PAGE SER. NO.	PAGE OF
TEST ITEM MODEL NO. WS133A SER. NO.	WORK ORDER NO. 78105	AUTHORITY EWA 8956	PLANNING BUDGET VERIFICATION	DATE 12/14

TIME	CONDITION NO.	WORK ITEM NO.		REF E. R. SER. NO.	OPERATION COMPLETION SHOP	INSP.	ENGR.
2000			Card 25-26642-177 Gives a NO-GO				
			quite often. Analysis with Test Adapter				
		2/10/9	Programmer Group Test Set and oscilloscope				
			it was determined that the K-1 signal				
			from the Fig. A 1201 had zero (0) volts				
			instead of the required 28 volts.				
			Investigation revealed that the Programmer				
			Group had not been Functional Tested				
			since it had been modified from -87				
		T2-2548, Vol. 2 Sec. 5 Page 13	to -89 configuration. A Functional Test				
			is required.				DW

PAGE	JOB NUMBER		PART NUMBER	NOMENCLATURE	LEAD INSP. STAMP	LEAD INSP. DATE	INSP. REG. STAMP	INSP. REG. DATE	GU.
10 OF	61347 U3 4400 5605 ORIG. 6/60		—	COMPATIBILITY TEST					

TEST NUMBER	UNIT SERIAL NUMBER	TEST PLANNING BY	TEST PLANNING DATE	MANUFACTURING AND INSPECTION RECORD TEST LOG	PAGE SER. NO.	PAGE OF
EDIT II-1B 02-13308 Vol. 2	—					

TEST ITEM MODEL NO.	SER. NO.	WORK ORDER NO.	AUTHORITY	PLANNING BUDGET VERIFICATION	DATE
WS133A		78105	EWA 8956		12/14

TIME	CONDITION NO.	WORK ITEM NO.		REF E. R. SER. NO.	OPERATION COMPLETION SHOP	INSP.	ENGR
1420		2/22/3	Arrangements were made with Mfg. to borrow one of their BTS 155A Test Set. Continued testing and NO-GO's appeared at random.				DW
1500			Test Set, Fig. A 3092 serial No. 0004, was brought into the EDIT Lab and connected in place of serial No. 0003. End to End Test cards were run 25-26642-165 thru -232 All Cards -- GO				DW
1620		T2-2548, Vol.2 Sec. 5 Page 14	Second run with same cards -165 to -195 All cards -- GO				

PAGE OF	JOB NUMBER	PART NUMBER	NOMENCLATURE	LEAD INSP. STAMP	LEAD INSP. DATE	INSP. REG. STAMP	INSP. REG. DATE	CL
11	61347	—	COMPATIBILITY TEST					

U3 4400 5605 ORIG. 6/60

EDIT E-1B D2-13303 Vol. 2	UNIT SERIAL NUMBER —	TEST PLANNING BY / DATE	**MANUFACTURING AND INSPECTION RECORD** TEST LOG	PAGE SER. NO.	PAGE OF
TEST ITEM MODEL NO. WS133A	SER. NO.	WORK ORDER NO. 78105	AUTHORITY EWA 8956	PLANNING BUDGET VERIFICATION	DATE 12/17/

TIME	CONDITION NO.	WORK ITEM NO.		REF E. R. SER. NO.	OPERATION COMPLETION SHOP	INSP.	ENGR
0000			Disconnected P/G Test Set ser. No. 0004 and returned to EDL/ET				
			Connected Test Set, ser. No. 0003, and continued test compatibility.				[illegible]
		2/22/3	Review of M & IR paper on Fig. A 3092, ser. No. 0003, revealed it had not had calibration certified since August '62. This certification is required every 60 days so this had to be done				[illegible]
1415		T2-2548, Vol. 2 Sec. 5 Page 15	Calibration certification begun on Fig. A 3092.				[illegible]
1600			BTS 155A received in EDIT LAB No Cables.				
1615			Arrangements confirmed to pick-up Cables during Second shift				[illegible]

PAGE	JOB NUMBER	PART NUMBER	NOMENCLATURE	LEAD INSP. STAMP	LEAD INSP. DATE	INSP. REG. STAMP	INSP. REG. DATE	CU.
12 OF	61347	—	COMPATIBILITY TEST					

U3 4400 5605 ORIG. 6/60

TEST NUMBER	UNIT SERIAL NUMBER	TEST PLANNING BY	TEST PLANNING DATE	MANUFACTURING AND INSPECTION RECORD TEST LOG	PAGE SER. NO.	PAGE OF
[illegible] D2-13368 Vol.2	—					

TEST ITEM MODEL NO.	SER. NO.	WORK ORDER NO.	AUTHORITY	PLANNING BUDGET VERIFICATION	DATE
[illegible]		78105	EWA 8956		12/18/

TIME	CONDITION NO.	WORK ITEM NO.		REF E. R. SER. NO.	OPERATION COMPLETION SHOP	INSP.	ENGR
1000			Calibration completed on P/G Test Set				
1200			0003 –				[illegible]
		2/22/3	(1) The D evaluator Interpulse Level was below the −1.75 ± .05 volt DC at jack INPUT				[illegible]
			(2) Calibration of Pulse Generators Card A15 – there was 113 microsecond pulse at jack M1 OUTPUT instead of 110 ± 2 μsec.				[illegible]
		T2-2548, Vol.2 Sec. 5 Page 16	(3) Calibration of Inhibit Amplifiers Card A16 – voltage at jack Φ1 OUTPUT was 20 volt DC instead of 17 ± .5 volt DC				[illegible]
			Card A16 – voltage at jack Φ2 OUTPUT was 20 volt DC instead of 17 ± .5 volt DC				[illegible]

PAGE OF	JOB NUMBER		PART NUMBER	NOMENCLATURE	LEAD INSP. STAMP	LEAD INSP. DATE	INSP. REG. STAMP	INSP. REG. DATE	CL
13	61347		—	COMPATIBILITY TEST					

U3 4400 5605 ORIG. 6/60

ESTT II-1B
D2-13308 Vol. 2

UNIT SERIAL NUMBER: —

TEST PLANNING BY / DATE

MANUFACTURING AND INSPECTION RECORD
TEST LOG

PAGE SER. NO.

PAGE 1 OF 3

TEST ITEM: MODEL NO. WS133A SER. NO.

WORK ORDER NO. 78105

AUTHORITY EWA 8956

PLANNING BUDGET VERIFICATION

DATE 12/[illegible]

ITEM	CONDITION NO.	WORK ITEM NO.		REF E. R. SER. NO.	OPERATION COMPLETION SHOP	INSP.	ENGR.
100			Procured Break-Out Box for Drawer				
			A3 Jack J1 (Dwg. # 25-22039) from				
		2/22/2	Manufacturing at B-70 bldg.				DWC
			Continued procuring equipment for				
			1201 F/T				DWC

T2-2548, Vol. 2
Sec. 5 Page 17

PAGE 14 OF

JOB NUMBER 61347

U3 4400 5605 ORIG. 6/60

PART NUMBER —

NOMENCLATURE COMPATIBILITY TEST

LEAD INSP. STAMP / DATE

INSP. REG. STAMP / DATE

CUS.

TEST NUMBER	UNIT SERIAL NUMBER	TEST PLANNING BY	TEST PLANNING DATE	MANUFACTURING AND INSPECTION RECORD TEST LOG PAGE SER. NO.	PAGE OF
EDIT II-1B D2-13308 VOL. 2	—				1 3

TEST ITEM MODEL NO.	SER. NO.	WORK ORDER NO.	AUTHORITY	PLANNING BUDGET VERIFICATION	DATE
WS133A		78105	EWA 8956		12/19

TIME	CONDITION NO.	WORK ITEM NO.		REF E. R. SER. NO.	OPERATION COMPLETION SHOP	INSP.	ENGR.
1000		2/22/3	Worked out problem with QC and Liaison Engineering to use Ellison Inclined Draft Gage in-place-of Honeywell Manometer 704X352 as called out in D2-7817, Vol. 3, Sec. 2, TP 5.1.4 This condition was corrected with a Type 2 ER				DWS
			Procurred a Perkins Power Supply, Model MTR 532-15 as called out in doc. D2-7817, Vol. 3, Sec. 2, TP 5.2.4				DWS
1030		T2-2548, Vol. 2 Sec. 5 Page 18	Q.C. certification required on P/S-into lab				
1410			Pwr. Supply returned from lab				
1530			1201 - Pwr A-6 -- Switch S2 -- NO-GO Reset found to be malfunctioning - to be replaced				DWS

PAGE OF	JOB NUMBER		PART NUMBER	NOMENCLATURE	LEAD INSP. STAMP	LEAD INSP. DATE	INSP. REG. STAMP	INSP. REG. DATE	CUS.
15	61347		—	COMPATIBILITY TEST					

U3 4400 5605 ORIG. 6/60

EDIT II-1B D2-13368 Vol. 2	UNIT SERIAL NUMBER —	TEST PLANNING BY / DATE	**MANUFACTURING AND INSPECTION RECORD** TEST LOG PAGE SER. NO.	PAGE 1 OF 3	
TEST ITEM MODEL NO. VS133A	SER. NO.	WORK ORDER NO. 78105	AUTHORITY EWA8956	PLANNING BUDGET VERIFICATION	DATE 12/2

TIME	CONDITION NO.	WORK ITEM NO.		REF E. R. SER. NO.	OPERATION COMPLETION SHOP	INSP.	ENGR.
1800		2/23/3	Perkins Pwr. Supply regulation was certified with 5% between 0-40 volts d.c. Document D2-7817, Vol. 3, Sec. 2, ¶ 5.2.4 requires 1% regulation stability.				[illegible]
			An ER type 4B was written to correct this particular case.				[illegible]
			Problem has arrisen as to test equipment to be used in EDL bldg. 9.120 at Developmental Center				[illegible]
		T2-2548, Vol. 2 Sec. 5 Page 19					
1330			Trip to warehouse 55 to pick up replacement switch for 1201 dwr A-6 S2-switch				[illegible]

PAGE 10 OF	JOB NUMBER 61347	PART NUMBER —	NOMENCLATURE COMPATIBILITY TEST	LEAD INSP. STAMP	DATE	INSP. REG. STAMP	DATE	CUS

U3 4400 5605 ORIG. 6/60

TEST NUMBER	UNIT SERIAL NUMBER	TEST PLANNING BY	TEST PLANNING DATE	MANUFACTURING AND INSPECTION RECORD TEST LOG	PAGE SER. NO.	PAGE OF
[illegible] D2-13308 V1.2	—					

TEST ITEM MODEL NO.	SER. NO.	WORK ORDER NO.	AUTHORITY	PLANNING BUDGET VERIFICATION	DATE
WS133A		78105	EWA 8956		12/2

TIME	CONDITION NO.	WORK ITEM NO.		REF E. R. SER. NO.	OPERATION COMPLETION SHOP	INSP.	EN
1533			Problems in BTS 155A OR Fig. A 1201				
			have been discovered by technician				[illegible]
		2122/3					
		T2-2540, Vol. 2 Sec. 5 Page 20					

PAGE OF	JOB NUMBER		PART NUMBER	NOMENCLATURE	LEAD INSP. STAMP	LEAD INSP. DATE	INSP. REG. STAMP	INSP. REG. DATE
17	61347		—	COMPATIBILITY TEST				

U3 4400 5605 ORIG. 6/60

TEST NO.	UNIT SERIAL NUMBER	TEST PLANNING BY	TEST PLANNING DATE	MANUFACTURING AND INSPECTION RECORD TEST LOG	PAGE SER. NO.	PAGE OF
EDIT II-1B D2-13308 V.1.2	—					

TEST ITEM MODEL NO.	SER. NO.	WORK ORDER NO.	AUTHORITY	PLANNING BUDGET VERIFICATION	DATE
WS[illegible]-A		78105	EWA8956		12/2

TIME	CONDITION NO.	WORK ITEM NO.		REF E. R. SER. NO.	OPERATION COMPLETION SHOP	INSP.	EN
0800			Technician to replace switch S-2 in 1201 drawer A-6				[illegible]
1030		2/02/3	Switch S-2 replaced and potential trouble in BTS 155A or Fig A 1201 has been cleared up.				[illegible]
1100			Dry Run Functional test begun				
1430			PP 10.7.162 - G7 indicator does not lite D2-7817, V-3, S-2				[illegible]
1530		T2-2548, Vol. 2 Sec. 5 Page 21	Cable W-4 -- Connector P04-Pin #1 indicated an intermiten connection but futher investigation revealed a broken connection. This trouble was ~~[illegible]~~ corrected and G7 indicator ~~did not~~ does lite.				[illegible]

PAGE	JOB NUMBER	PART NUMBER	NOMENCLATURE	LEAD INSP. STAMP	LEAD INSP. DATE	INSP. REG. STAMP	INSP. REG. DATE
1 OF	61347	—	COMPATIBILITY TEST				

U3 4400 5605 ORIG. 6/60

TEST NUMBER: EDIT II-1B D2-13308 Vol. 2	UNIT SERIAL NUMBER: —	TEST PLANNING BY / DATE	MANUFACTURING AND INSPECTION RECORD TEST LOG	PAGE SER. NO.	PAGE OF
TEST ITEM MODEL NO.: [illegible] SER. NO.	WORK ORDER NO.: 78105	AUTHORITY: EWA 8956	PLANNING BUDGET VERIFICATION		DATE: 12/2

TIME	CONDITION NO.	WORK ITEM NO.		REF E. R. SER. NO.	OPERATION COMPLETION SHOP	INSP.	EN
0800			Functional test started on P/G Fig. A 1201				
			TP 9.0 to TP 10.10.3-1 of doc. D2-7817, [illegible]		[illegible]	[illegible]	[illegible]
1245		2/22/2	BTS 155A continues to blow fuses when power is applied				[illegible]
1330			Checked Schematic and removed rectifier cards in Power Drawer (A-6)				
			Fuse blew with power applied. This indicated the trouble was either the main transf., diodes, or condenser				
		T2-2548, Vol. 2 Sec. 5 Page 22	All connections removed from transf for check — Okay; added condenser to circuit and everything checks OK — trouble ~~[illegible]~~ is in one of the diodes.				[illegible]
1400			A Resistance checking revealed the defective diode to be CR145				[illegible]

PAGE	JOB NUMBER		PART NUMBER	NOMENCLATURE	LEAD INSP. STAMP	LEAD INSP. DATE	INSP. REG. STAMP	INSP. REG. DATE
19 OF	61347		—	COMPATIBILITY TEST				

U3 4400 5605 ORIG. 6/60

TEST NUMBER	UNIT SERIAL NUMBER	TEST PLANNING BY	TEST PLANNING DATE	MANUFACTURING AND INSPECTION RECORD TEST LOG	PAGE SER. NO.	PAGE OF
EDIT II-1B D2-13309 Vol. 2	—					

TEST ITEM MODEL NO.	SER. NO.	WORK ORDER NO.	AUTHORITY	PLANNING BUDGET VERIFICATION	DATE
WS133A		78105	EWA8956		12/[illegible]

TIME	CONDITION NO.	WORK ITEM NO.		REF E. R. SER. NO.	OPERATION COMPLETION SHOP	INSP.	EN
1500			Diode replaced and installed in Power Drawer (A-6)				
			of BTS 155A — Defective diode was				
		2/22/3	CR145				[illegible]
1600			Ready to check out BTS 155A before				
			continuing the F/T on 1201				[illegible]
			Voltage readings ~~recorded~~ on BTS155A				
			recorded to verify validity of repair.				[illegible]
		T2-2548, Vol. 2 Sec. 5 Page 23					

PAGE OF	JOB NUMBER	PART NUMBER	NOMENCLATURE	LEAD INSP. STAMP	LEAD INSP. DATE	INSP. REG. STAMP	INSP. REG. DATE
20	61347	—	COMPATIBILITY TEST				

U3 4400 5605 ORIG. 6/60

TE[illegible]	UNIT SERIAL NUMBER	TEST PLANNING BY	TEST PLANNING DATE	MANUFACTURING AND INSPECTION RECORD TEST LOG	PAGE OF
E[illegible]-1B D2-13363 Vol. 2	—			PAGE SER. NO.	

MODEL NO.	TEST ITEM SER. NO.	WORK ORDER NO.	AUTHORITY	PLANNING BUDGET VERIFICATION	DATE
W5133A		78105	EWA8956		12/2[illegible]

TIME	CONDITION NO.	WORK ITEM NO.		REF E. R. SER. NO.	OPERATION COMPLETION SHOP	INSP.	FN
0800			Voltage readings on BTS 155A were compared wit document values and ~~[illegible]~~ all readings were within tolerances.				
0830		2/22/2	Functional testing continued on 1201 at TP 10.10 in doc. D2-7017, Vol. 3, Sec. 2				
1400			Functional test complete through TP 10.16.39				
			Completion the formal planning paper was required during the remainder of the day.				
		T2-2543, Vol. 2 Sec. 5 Para 24					

PAGE	JOB NUMBER	PART NUMBER	NOMENCLATURE	LEAD INSP. STAMP	LEAD INSP. DATE	INSP. REG. STAMP	INSP. REG. DATE
21 OF	61347	—	COMPATIBILITY TEST				

U3 4400 5605 ORIG. 6/60

TEST NUMBER	UNIT SERIAL NUMBER	TEST PLANNING BY	TEST PLANNING DATE	MANUFACTURING AND INSPECTION RECORD TEST LOG	PAGE SER. NO.	PAGE OF
EDIT II-1B D2-13308 Vol. 2	—					

TEST ITEM MODEL NO.	SER. NO.	WORK ORDER NO.	AUTHORITY	PLANNING BUDGET VERIFICATION	DATE
WS133A		78105	EWA 8956		12/

TIME	CONDITION NO.	WORK ITEM NO.		REF E. R. SER. NO.	OPERATION COMPLETION SHOP		EN
0800			Prepare BTS 155A to be shipped back to factory - also cabling and other equip.				[illegible]
0900		2/22/3	Connect Fig "A"'s 1201, 3113, 3092 & 4523 as shown on Fig 3.2.1.3-1 of document D2-13308, Volume 2, Section 2 for EDIT II-1B program				[illegible]
9000			Run self-check on P/G Test Set OK				[illegible]
		T2-2548, Vol. 2 Sec. 5 Page 25	Voltage checks - OK				[illegible]
1300			Trouble on End to End Card test				[illegible]
			Ray Miller - MGE Design Group Connected Test Adapter - P/G test Set - AC0721 & scope				[illegible]

PAGE OF	JOB NUMBER		PART NUMBER	NOMENCLATURE	LEAD INSP. STAMP	LEAD INSP. DATE	INSP. REG. STAMP	INSP. REG. DATE
25	61347		—	COMPATIBILITY TEST				

U3 4400 5605 ORIG. 6/60

D2-13[illegible] Vol. 2	UNIT SERIAL NUMBER —	TEST PLANNING BY / DATE	**MANUFACTURING AND INSPECTION RECORD** TEST LOG PAGE SER. NO.	PAGE OF
MODEL NO. [illegible]	TEST ITEM SER. NO.	WORK ORDER NO. 78105	AUTHORITY EWA 8956	PLANNING BUDGET VERIFICATION	DATE 12/3

TIME	[illegible]	WORK ITEM NO.		REF E. R. SER. NO.	OPERATION COMPLETION SHOP.	INSP.	EN
[illegible]			In checking it was found that the Card Reader was causing faults. Thus assy was removed and arrangements were made with shop 2-3634 at the MPC Bldg. to checkout this Card Reader.				[illegible]

F2-2548, Vol. 2
Sec. 5 Page 26

PAGE OF	JOB NUMBER		PART NUMBER	NOMENCLATURE	LEAD INSP. STAMP	LEAD INSP. DATE	INSP. REG. STAMP	INSP. REG. DATE
	61347		—	COMPATIBILITY TEST				

U3 4400 5605 ORIG. 6/60

TEST NUMBER	UNIT SERIAL NUMBER	TEST PLANNING BY	TEST PLANNING DATE	MANUFACTURING AND INSPECTION RECORD TEST LOG	PAGE SER. NO.	PAGE OF
EDIT II-1B D2-13308 Vol. 2	—					

TEST ITEM MODEL NO.	SER. NO.	WORK ORDER NO.	AUTHORITY	PLANNING BUDGET VERIFICATION	DATE
WS133A		78105	EWA 8956		1-2-

TIME	CONDITION NO.	WORK ITEM NO.		REF E. R. SER. NO.	OPERATION COMPLETION SHOP	INSP.	ENG
0800			Traveled to MPC and checked the Card Reader Assy. Found that contacts checked OK with res. max. of 2 ohms but not at 0.5 ohms as original spec. called out. This test was done on DITMCO unit. Checkout on FCO showed CR40 diode to be bad. CR50 showed bad but recheck was OK. CR40 was replaced. The card stop was cleaned out and adjusted as the card holes did not center over the Reader to [illegible]. This was corrected.				[illegible]
1500			Checked assy again on FCO and DITMCO - all GO				[illegible]

2/22/3

T2-2543, Vol. 2 Sec. 5 Page 27

PAGE OF	JOB NUMBER		PART NUMBER	NOMENCLATURE	LEAD INSP. STAMP	LEAD INSP. DATE	INSP. REG. STAMP	INSP. REG. DATE
24	61347		—	COMPATIBILITY TEST				

U3 4400 5605 ORIG. 6/60

UNIT SERIAL NUMBER	TEST PLANNING BY	TEST PLANNING DATE	MANUFACTURING AND INSPECTION RECORD TEST LOG	PAGE OF
—			PAGE SER. NO.	

MODEL NO.	ITEM SER. NO.	WORK ORDER NO.	AUTHORITY	PLANNING BUDGET VERIFICATION	DATE
		79105	EWA 8956		1-3-

TIME		ITEM		REF E. R. SER. NO.	OPERATION COMPLETION SHOP	INSP.	SN
0800			Connected Card Reader Assy to P/G test Setup to #3092. Connected Test Set in EDIT system. Made self test on Test Set. - GO Tables & Checks - all GO.				
			EDIT Compatibility End to End Test.				

Card No.	1st	2nd	3rd	4th	5th	6th	7th	8th
	-185	-197	-169	-172	-178	ALL GO's	-177	ALL GO's
of NO-GO's	-200	-198	-174	-185	-201		-187	
		-200	-180					
		-201						
		-204						
		-214						
		-219						
		-220						
		-222						
		-223						
		-229						

T2-2548, Vol. 2 Sec. 5 Page 28

PAGE OF	JOB NUMBER	PART NUMBER	NOMENCLATURE	LEAD INSP. STAMP	LEAD INSP. DATE	INSP. REG. STAMP	INSP. REG. DATE
	61347	—	COMPATIBILITY TEST				

U3 4400 5605 ORIG. 6/60

UNIT SERIAL NUMBER	TEST PLANNING BY	TEST PLANNING DATE	MANUFACTURING AND INSPECTION RECORD TEST LOG	PAGE SER. NO.	PAGE OF

MODEL	TEST ITEM	WORK ORDER NO.	AUTHORITY	PLANNING BUDGET VERIFICATION	DATE
		78105	EWA 8956		1-9-

		ITEM NO.		REF E. R. SER. NO.	OPERATION COMPLETION SHOP	INSP.	EN
			Continued performing End to End compatibility testing. Made 10 cycles with the following results. NO-GO cards				
			1st 2nd 3rd 4th 5th 6th				
		2/22/3	-170 All-GO All-GO All-GO All-GO All GO				
			7th 8th 9th 10th				
			-185 All-GO -198 -204				
			-197 -221 -209				
1600			-232 -231				

T2-2548, Vol. 2
Sec. 5 Pa[illegible] 29

PAGE OF	JOB NUMBER	PART NUMBER	NOMENCLATURE	LEAD INSP. STAMP	LEAD INSP. DATE	INSP. REG. STAMP	INSP. REG. DATE
	61347	—	COMPATIBILITY TEST				

U3 4400 5605 ORIG. 6/60

TEST NUMBER	UNIT SERIAL NUMBER	TEST PLANNING BY	TEST PLANNING DATE	MANUFACTURING AND INSPECTION RECORD TEST LOG	PAGE OF
EDIT II-1B D2-13308 Vol. 2	—			PAGE SER. NO.	

MODEL NO.	TEST ITEM SER. NO.	WORK ORDER NO.	AUTHORITY	PLANNING BUDGET VERIFICATION	DATE
W5133A		78105	EWA 8956		1-10

TIME	CONDITION NO.	WORK ITEM NO.		REF E. R. SER. NO.	OPERATION COMPLETION SHOP	INSP.	EN
0800			End to End Testing				
			NO-GO's				
			1st / 2nd / 3rd / 4th				
			-175 / -165 / -168 / -181				
		8/22/3	-178 / -172 / -179 / -224				
			-185 / -176 / -192 / -225				
			-187 / -198 / -226				
			-207				
			-221				
			-232				
			5th / 6th / 7th				
		T2-2548 Vol. 2 Sec. 5 Page 30	-176 / -183 / -215				
			-179 / -191				
1600			-194				

PAGE OF	JOB NUMBER	PART NUMBER	NOMENCLATURE	LEAD INSP. STAMP	LEAD INSP. DATE	INSP. REG. STAMP	INSP. REG. DATE
	61347	—	COMPATIBILITY TEST				

U3 4400 5605 ORIG. 6/60

TEST PROCEDURE	UNIT SERIAL NUMBER	TEST PLANNING BY	TEST PLANNING DATE	MANUFACTURING AND INSPECTION RECORD — TEST LOG	PAGE OF
EDIT II-1E D2-13303 Vol. 2	—			PAGE SER. NO.	

MODEL NO.	TEST ITEM SER. NO.	WORK ORDER NO.	AUTHORITY	PLANNING BUDGET VERIFICATION	DATE
WS133A		78105	EWA8956		1-11-

TIME	OPERATION NO.	WORK ITEM NO.		REF E. R. SER. NO.	OPERATION COMPLETION SHOP	INSP.	EN
0800			End to End Testing: NO GO's				
			1st / 2nd / 3rd / 4th / 5th				
			-165 / All-GO's / -191 / -185 / -166				
		1/22/3	-187 / -206 / -187 / -175				
			-220 / -196 / -176				
			-225 / -198 / -190				
			-193				
			-217				
			6th				
			-225				
1600		T2-2548, Vol. 2 Sec. 5 Page 31	-226				

PAGE OF	JOB NUMBER		PART NUMBER	NOMENCLATURE	LEAD INSP. STAMP	LEAD INSP. DATE	INSP. REG. STAMP	INSP. REG. DATE
	61347		—	COMPATIBILITY TEST				

U3 4400 5605 ORIG. 6/60

3/11

TEST NUMBER	UNIT SERIAL NUMBER	TEST PLANNING BY	TEST PLANNING DATE	MANUFACTURING AND INSPECTION RECORD TEST LOG	PAGE OF
FDIT II-1B D2-13308 Vol. 2	—			PAGE SER. NO.	

MODEL NO.	TEST ITEM SER. NO.	WORK ORDER NO.	AUTHORITY	PLANNING BUDGET VERIFICATION	DATE
WS133A		78105	EWA 8956		1-1

TIME	CONDITION NO.	WORK ITEM NO.		REF E. R. SER. NO.	OPERATION COMPLETION SHOP	INSP.	ENG
0800		1-	Continued End to End testing with the following NO-GO's				
			-168 -189 -204 -220				
			-173 -190 -205 -222				
		2/22/3	-180 -193 -206 -225				
			-181 -194 -214 -226				
			-185 -195 -215 -228				
			-188 -201 -219 -232				Du
		2-	Timer Sequential test - All GO				Du
		3-	P/G Launch Sequence Test - NO-GO's				
			-132, -133, -136, -140, -145, -157				Du
	T2-2548, Vol. 2 Sec. 5 Page 32	4-	Programmer Calibration Test - All GO				Du
		5-	Monitor Launcher Missile Status Test -				
			NO GO's --: -141, -155, -156, -160				Du

PAGE OF	JOB NUMBER	PART NUMBER	NOMENCLATURE	LEAD INSP. STAMP	LEAD INSP. DATE	INSP. REG. STAMP	INSP. REG. DATE	CL
	61347	—	COMPATIBILITY TEST					

U3 4400 S605 ORIG. 6/60

6hL.

TEST NUMBER	UNIT SERIAL NUMBER	TEST PLANNING BY	TEST PLANNING DATE	MANUFACTURING AND INSPECTION RECORD TEST LOG	PAGE OF
EDIT II-1B D2-13308 Vol. 2	—			PAGE SER. NO.	

TEST ITEM MODEL NO.	SER. NO.	WORK ORDER NO.	AUTHORITY	PLANNING BUDGET VERIFICATION	DATE
WS133A		78105	EWA 8956		1-16-

TIME	CONDITION NO.	WORK ITEM NO.		REF E. R. SER. NO.	OPERATION COMPLETION SHOP	INSP.	ENG
0800			Installed new Card Reader Assy,				
			ser. # 0000021, in P/G Test Set.				
			Connected all equip. for EDIT II-1B				
			test. Proceeded with EDIT II-1B Test				
			TP 3.2.1.5 — Completed				[illegible]
			3.2.1.6 — Completed				[illegible]
			3.2.2.0 — Completed				[illegible]
			3.2.3.0 — Completed				[illegible]
			3.2.4.0 — Completed				[illegible]
			3.2.5.0 — Completed				[illegible]
			3.2.6.0 — Completed				[illegible]
			3.2.7.0 — Completed				[illegible]
			3.2.8.0 — Completed				[illegible]
1600			3.2.8.3 — Test Complete — OK				[illegible]

T2-2548, Vol. 2 Sec. 5 Page 33

PAGE OF	JOB NUMBER		PART NUMBER	NOMENCLATURE	LEAD INSP. STAMP	LEAD INSP. DATE	INSP. REG. STAMP	INSP. REG. DATE	CU
	61347		—	COMPATIBILITY TEST					

U3 4400 5605 ORIG. 6/60

[illegible]	UNIT SERIAL NUMBER	TEST PLANNING BY	TEST PLANNING DATE	MANUFACTURING AND INSPECTION RECORD TEST LOG PAGE SER. NO.	PAGE OF
[illegible] II-1B [illegible]	—				

TEST ITEM MODEL NO.	SER. NO.	WORK ORDER NO.	AUTHORITY	PLANNING BUDGET VERIFICATION	DATE
WS133A		78105	EWA 8956		1-17-

TIME	CONDITION NO.	WORK ITEM NO.		REF E. R. SER. NO.	OPERATION COMPLETION SHOP	INSP.	ENG
0800			Perform End to End test to obtain performance data on Card Reader Assy. (60 cards)				
			1st cycle: All cards GO; 2nd: -174 -181 NO-GO; 3rd: All Cards GO; 4th: All cards GO				
		2/22/3					[illegible]
			5th: -199 NO-GO; 6th: All cards GO; 7th: All cards GO; 8th: All cards GO				[illegible]
		T2-2548, Vol. 2 Sec. 5 Page 34					
			Final shut-down of equipment in EDIT II-1B Test. Elapsed Time Meter reading -- 0169.7 Total hours 141.3 hours				[illegible]

PAGE OF	JOB NUMBER		PART NUMBER	NOMENCLATURE	LEAD INSP. STAMP	LEAD INSP. DATE	INSP. REG. STAMP	INSP. REG. DATE	CU
	61347		—	COMPATIBILITY TEST					

U3 4400 5605 ORIG. 6/60

THE BOEING COMPANY

NUMBER T2-2548 MODEL NO. WS133A

TITLE Engineering Development Integration

Test No. Two-B (EDIT II-1B) Photographs

PREPARED BY	D. W. Gladish	3/14/63
SUPERVISED BY	E. G. Helling	3/12/3
APPROVED BY	R. B. Edgar	3/13/3
RELIABILITY APPROVAL		(DATE)

AF 04(647)-289
CONTRACT NO.

5-78105-8640-68956
CHARGE NUMBER

2/22/3

1.0 PHOTOGRAPHS

The following photographs show equipment used in the EDIT test. The first photograph shows all the equipment connected as shown in Figure 3.2.1.3-1.

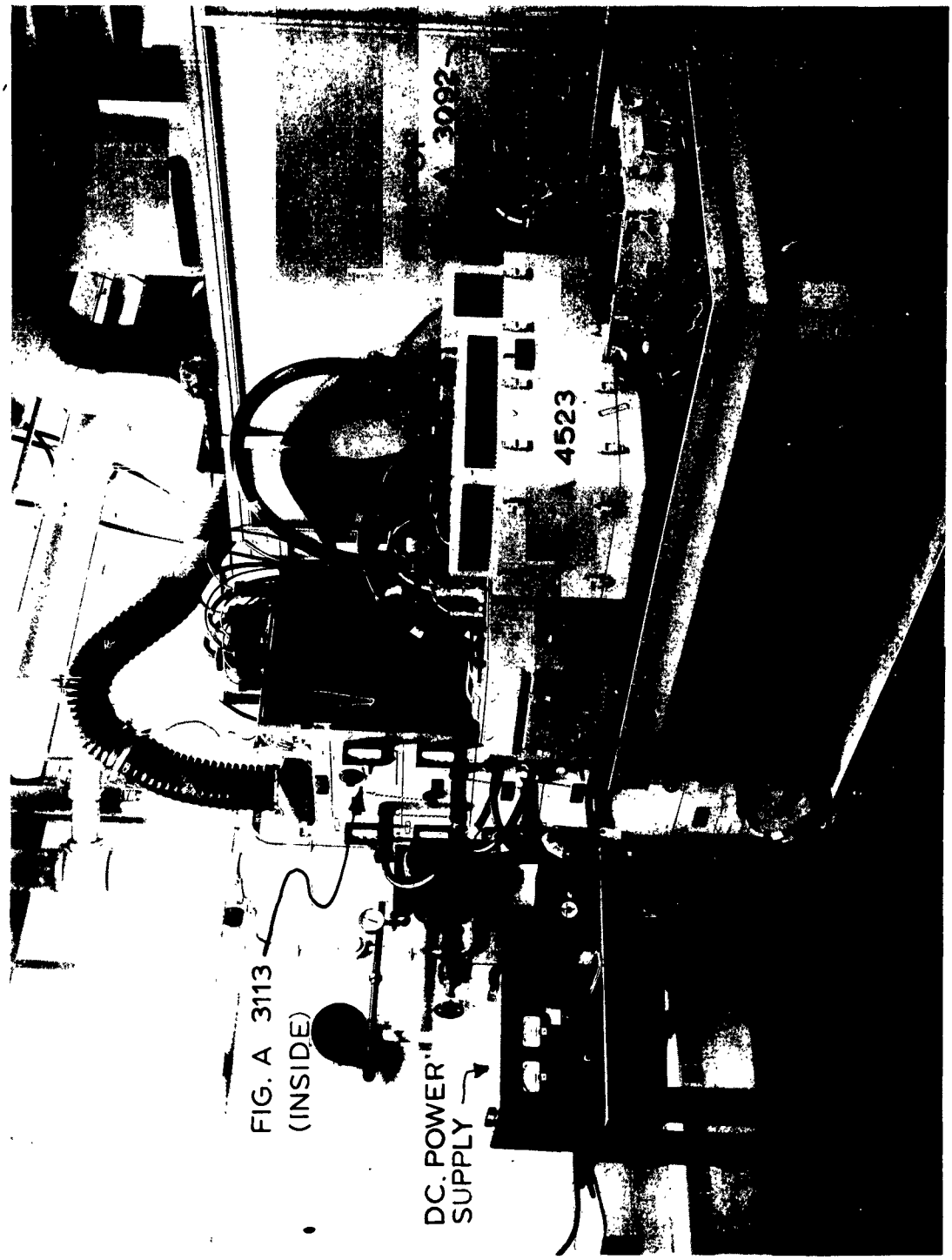

2A131245
MS- PROGRAMMER GROUP CARD READER
AND ADAPTER - EDIT TEST 1-17-63

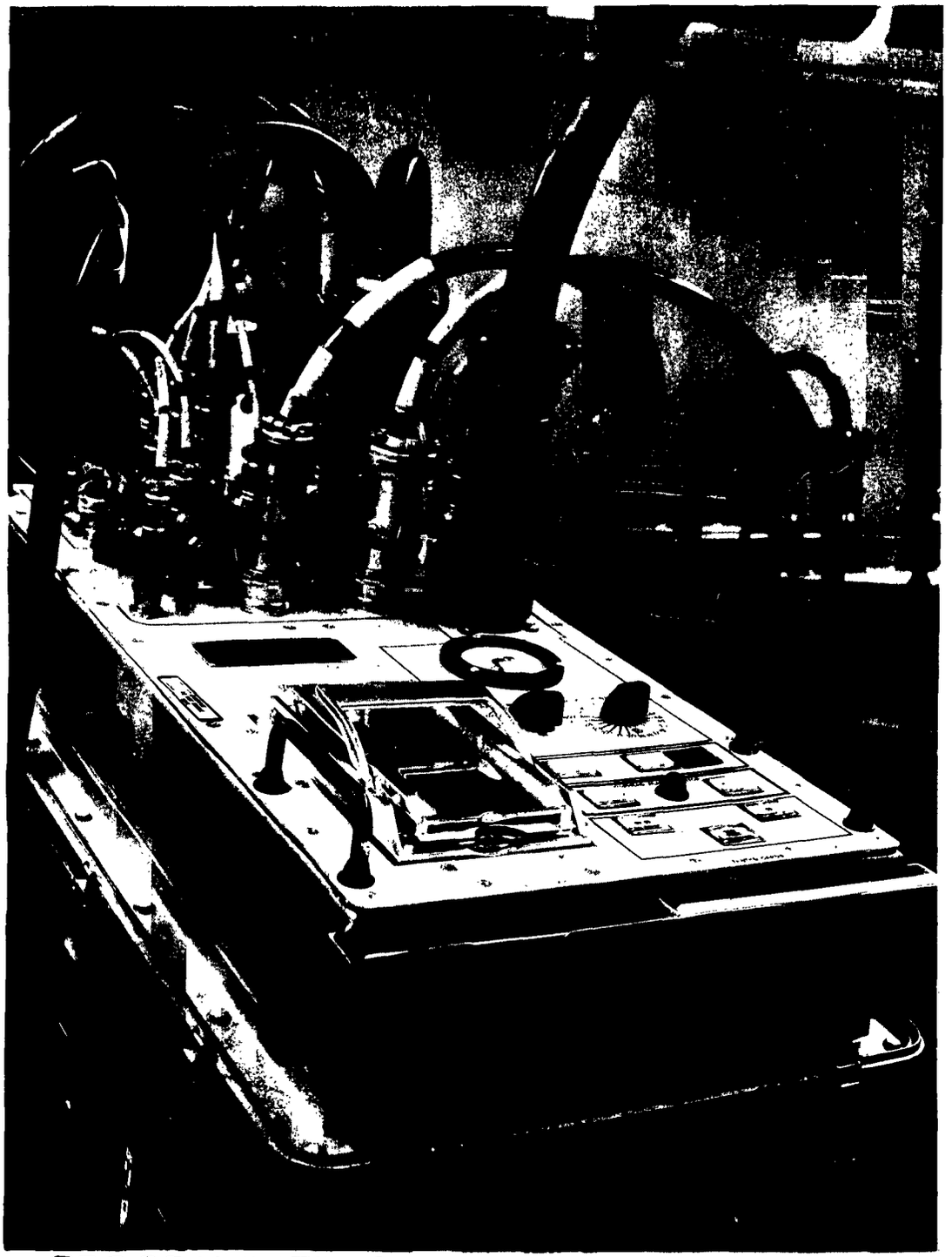

PROGRAMMER GROUP TEST SET
FIG. A 3092

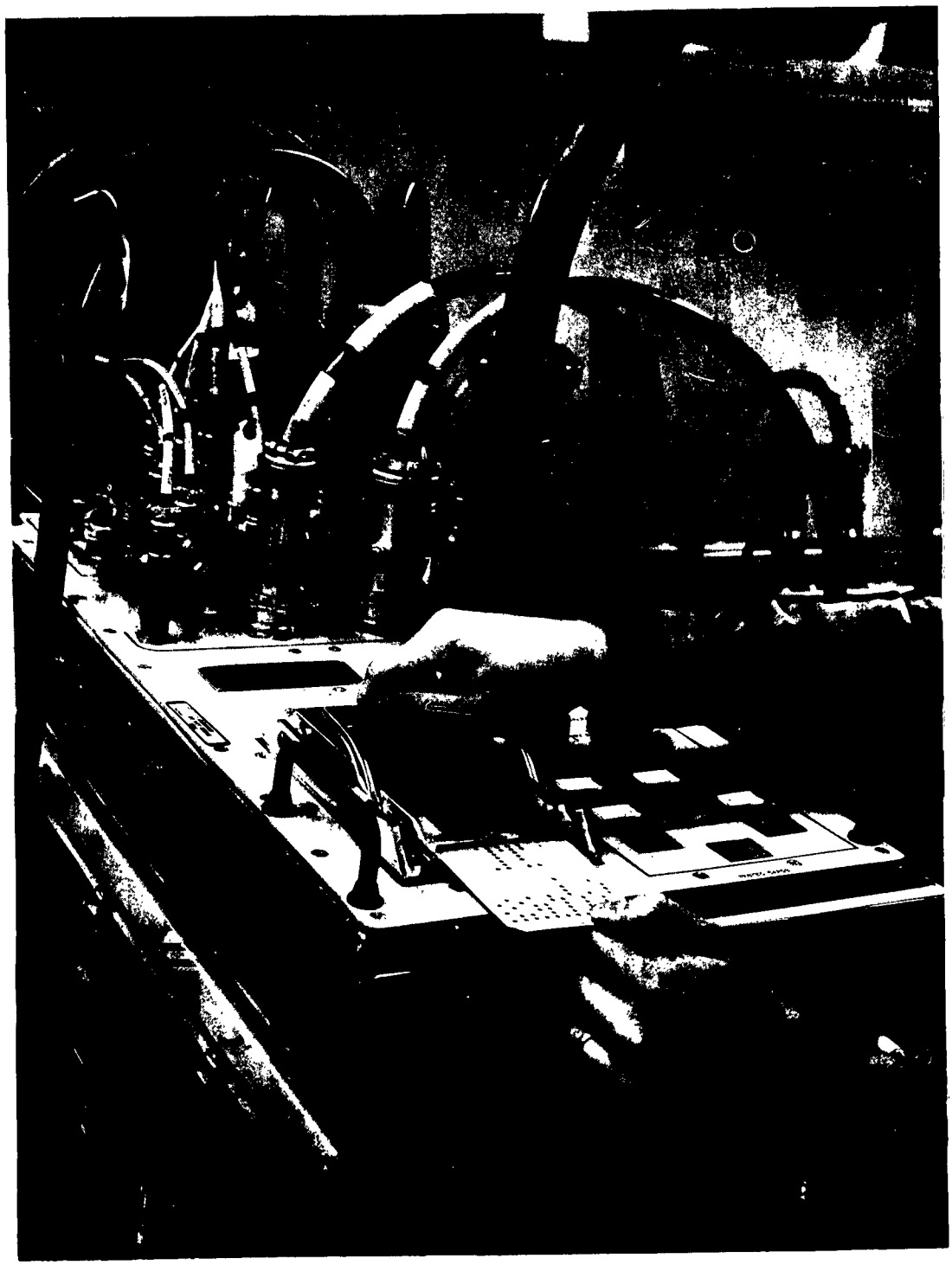

REMOVING CARD FROM CARD READER

FIG. A 3092

M- PROGRAMMER GROUP CARD READER AND ADAPTER - BOIT TEST 1-17-63 2A131244

DISTRIBUTION BOX— PART OF
FIG. A 3092

REVISED 2/22/63
U3 4288 2000
BOEING | VOL. 2 | NO T2-2548
SEC. 6 | PAGE 6

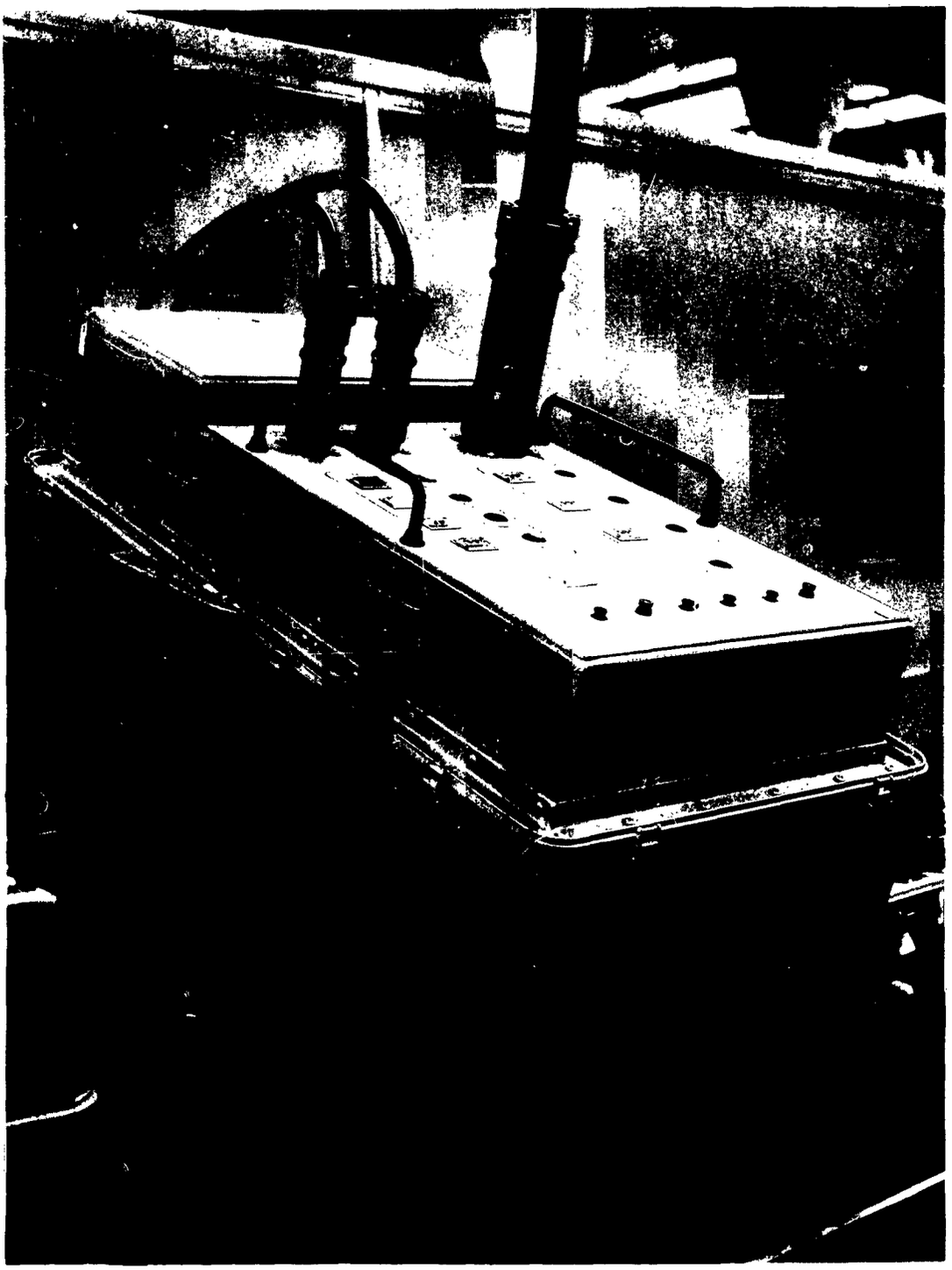

POWER SUPPLY — FIG. A 4523

REVISED 2/22/63
U3 4288 2000
BOEING | VOL. 2 | NO T 2-2548
SEC. 6 | PAGE 7

DUMMY DECODER RELAY ASSEMBLY—
FIG. A 3113