UNCLASSIFIED

AD 405 750

DEFENSE DOCUMENTATION CENTER

FOR

SCIENTIFIC AND TECHNICAL INFORMATION

CAMERON STATION, ALEXANDRIA, VIRGINIA

UNCLASSIFIED

NOTICE: When government or other drawings, specifications or other data are used for any purpose other than in connection with a definitely related government procurement operation, the U. S. Government thereby incurs no responsibility, nor any obligation whatsoever; and the fact that the Government may have formulated, furnished, or in any way supplied the said drawings, specifications, or other data is not to be regarded by implication or otherwise as in any manner licensing the holder or any other person or corporation, or conveying any rights or permission to manufacture, use or sell any patented invention that may in any way be related thereto.

405 750

405750

CR 3-5

NATIONAL SCIENTIFIC LABORATORIES, INC.

Electronics - Research - Development

200 MASSACHUSETTS AVENUE, N. W.

WASHINGTON 6, D. C.

DDC

JUN 7 1963

TISIA D

Copy No. 7

FINAL REPORT

July 1, 1961 to March 15, 1963

MONITORING SET, TELEPHONE AN/GTA-13 (XE-2)

Service Test Model

Contract No. DA36-039-sc-88911

DA Project No. 3B21-09-001

U. S. Army Electronics Research and Development Laboratory

Ft. Monmouth, New Jersey

Submitted to: U. S. Army Electronics Research and Development Laboratory
Communications Department
Ft. Monmouth, New Jersey
Attn: Messrs. Gordon W. Bartle and John L. Faherty, Switching Branch, Data Processing Division

Submitted by: National Scientific Laboratories, Inc.
2010 Massachusetts Avenue, N. W.
Washington 6, D. C.

Report prepared by:

Francis E. Stimson
Project Engineer

Approved by:

W. C. Green
Vice President
Engineering

TABLE OF CONTENTS

	Page
1. PURPOSE	1
2. ABSTRACT	3
3. REPORTS AND CONFERENCES	4
3.1 Reports	4
3.1.1 First Monthly Progress Summary	4
3.1.2 Second Monthly Progress Summary	4
3.1.3 Third Monthly Progress Summary	4
3.1.4 Fourth Monthly Progress Summary	4
3.1.5 Fifth Monthly Progress Summary	4
3.1.6 Special Report No. 1	4
3.1.7 Sixth Monthly Progress Summary	4
3.1.8 Seventh Monthly Progress Summary	4
3.1.9 Eighth Monthly Progress Summary	4
3.1.10 Ninth Monthly Progress Summary	5
3.1.11 Tenth Monthly Progress Summary	5
3.1.12 Eleventh Monthly Progress Summary	5
3.1.13 Certificate of Compliance	5
3.1.14 Preliminary Engineering Report, Monitor Set, Telephone, AN/GTA-13(XE-1), Engineering Test Model	5
3.1.15 Interim Report	5
3.1.16 Twelfth Monthly Progress Summary	5
3.1.17 Thirteenth Monthly Progress Summary	5
3.1.18 Fourteenth Monthly Progress Summary	5
3.1.19 Fifteenth Monthly Progress Summary	5
3.1.20 Sixteenth Monthly Progress Summary	5
3.1.21 Seventeenth Monthly Progress Summary	5
3.1.22 Eighteenth Monthly Progress Summary	6
3.1.23 Nineteenth Monthly Progress Summary	6
3.1.24 Certificate of Compliance	6
3.1.25 Final Report	6
3.2 Conferences	6
3.2.1 July 20, 1961	6
3.2.2 August 29, 1961	6
3.2.3 October 4, 1961	7
3.2.4 November 13, 1961	7
3.2.5 November 29, 1961	8
3.2.6 February 5, 1962	8
3.2.7 April 9, 1962	9
3.2.8 May 31, 1962	9
3.2.9 June 15, 1962	10
3.2.10 August 8, 1962	10
3.2.11 September 21, 1962	11

TABLE OF CONTENTS (Cont.)

Page

3.2.12 November 6, 1962 11
3.2.13 November 20, 1962 12
3.2.14 January 15, 1963 12
3.2.15 March 15, 1963 12
4. FACTUAL DATA 14
4.1 General System Considerations 14
4.2 Component Selection and Reliability 16
4.2.1 General 16
4.2.2 Transistors 17
4.2.3 Diodes 18
4.2.4 Resistors 19
4.2.5 Capacitors 19
4.2.6 Miscellaneous 20
4.2.7 Results of the Reliability Study 20
4.3 Circuit Description. General 21
4.4 Component Numbering System 21
4.4.1 Monitor Unit 21
4.4.2 Dialed Number Indicator (DNI) 22
4.5 Controls, Indicators, and Connectors 22
4.6 Primary Circuit Functions, Monitor Unit 22
4.6.1 DC Recovery 22
4.6.2 Line Selector Circuits 23
4.6.3 Voice Frequency Monitoring 23
4.6.4 Warning Tone 23
4.6.5 Recorder Control 23
4.6.6 Earphone Amplifier 24
4.7 Primary Circuit Functions, DNI 24
4.7.1 Counter Driver 24
4.7.2 Digit Counter 24
4.7.3 Counter 24
4.7.4 Matrix Card and Indicator Drivers 25
4.7.5 Reset 25
4.8 Block Diagram, Monitor Unit, Figure 1 25
4.8.1 DC Recovery 25
4.8.2 Line Selection 26
4.8.3 Audible Alarm 28
4.8.4 Voice Frequency Monitoring 29
4.8.5 Warning Tone 29
4.8.6 Recorder Control 30
4.8.7 Power Supply 32
4.9 Block Diagram, DNI, Figure 2 32
4.9.1 Counter Driver 32
4.9.2 Digit Counter 33
4.9.3 Dial Pulse Counter 33

TABLE OF CONTENTS (Cont.)

Page

4.9.4 Indicator..... 34
4.9.5 Feedback Driver..... 34
4.9.6 Reset..... 35
4.9.7 Power Supply..... 35
4.10 Detailed Schematic Analysis..... 35
4.10.1 DC Recovery..... 35
4.10.1.1 Initial Methods..... 35
4.10.1.2 Final DC Recovery Input Circuits, Figures 3, 4 and 5..... 37
4.10.1.3 DC Recovery, Card 400, Figure 5..... 39
4.10.1.4 Modification, Card 400, Figure 5..... 42
4.10.2 Line Selection, Card 600, Figure 6..... 43
4.10.3 Dial Pulse Gating, Card 600, Figure 6..... 45
4.10.4 Audible Alarm, Card 700, Figure 7..... 46
4.10.5 Warning Tone Generator, Card 500, Figure 8.. 47
4.10.5.1 Final Circuit..... 47
4.10.5.2 Modification of Engineering Test Model Design..... 49
4.10.6 Compressor Amplifier, Card 300, Figure 9.... 49
4.10.6.1 Final Circuit..... 49
4.10.6.2 Modifications of Engineering Test Model Design..... 51
4.10.7 Warning Tone Coupling, Card 300, Figure 9... 52
4.10.8 Relay Control, Card 600, Figure 6..... 53
4.10.9 Power Supply, Figure 10..... 55
4.10.10 Regulator Amplifier, Card 800, Figure 11.... 56
4.10.11 Earphone Amplifier, Card 800, Figure 11..... 57
4.10.12 Counter Driver, Card 400, DNI, Figure 12.... 57
4.10.13 Digit Counter, Card 300, DNI, Figure 13..... 58
4.10.14 Counter, Card 100, DNI, Figure 14..... 59
4.10.15 Matrix and Indicator Tube Drivers, Card 200, DNI, Figure 15..... 60
4.10.16 DNI Reset, Card 400, DNI, Figure 12..... 60
4.10.17 Power Supply, DNI Chassis, Figure 16..... 61
4.11 Mechanical Design..... 62
4.11.1 General..... 62
4.11.2 Monitor Unit, Engineering Test Model Mechanical Design..... 63
4.11.3 Monitor Unit, Service Test Model Mechanical Design..... 65
4.11.4 Dialed Number Indicator, Engineering Test Model, Mechanical Design..... 67
4.11.5 Dialed Number Indicator, Service Test Model, Mechanical Design..... 67

TABLE OF CONTENTS (Cont.)

Page

4.11.6 Printed Circuit Cards..... 68
4.12 Electrical Performance Data..... 69
4.12.1 General..... 69
4.12.2 DC Recovery..... 69
4.12.2.1 INPUT MODE SWITCH Position 1 (Ringdown Line)..... 69
4.12.2.2 INPUT MODE SWITCH Position 2 (24 v Line)..... 70
4.12.2.3 INPUT MODE SWITCH Position 3 (48 v Line)..... 70
4.12.2.4 INPUT MODE SWITCH Position 4 (60 v Line)..... 70
4.12.2.5 Limits of Operation..... 70
4.12.3 Dialed Number Indicator..... 70
4.12.4 Recorder Control..... 71
4.12.5 Supervisory Signal (Ringdown Mode)..... 71
4.12.6 Warning Tone..... 72
4.12.6.1 Engineering Test Model..... 72
4.12.6.2 Service Test Model..... 72
4.12.7 Compressor Amplifier..... 73
4.12.7.1 Compression..... 73
4.12.7.2 Frequency Response, Engineering Test Model..... 74
4.12.7.3 Frequency Response, Service Test Model..... 74
4.12.8 Crosstalk Coupling Attenuation, Engineering Test Model..... 74
4.12.9 Crosstalk Coupling Attenuation, Service Test Model..... 75
4.12.10 Harmonic Distortion..... 75
4.12.11 Noise Level..... 75
4.12.12 Line Loading..... 76
4.12.13 Longitudinal Balance..... 76
4.12.14 Regulated 15 Volt Power Supply..... 77
4.12.15 Unregulated 24 Volt Power Supply..... 77
4.12.16 Radio Interference Measurements..... 78
4.12.16.1 Test Setup and Equipment Used..... 78
4.12.16.2 Radiated Interference..... 79
4.12.16.3 Conducted Interference..... 79
4.12.16.4 Chopper Signal Level..... 80
4.12.16.5 Power Line Conducted Susceptibility... 80
5. OVER-ALL CONCLUSIONS..... 81

TABLE OF CONTENTS (Cont.)

Page

6. RECOMMENDATIONS..... 82
7. IDENTIFICATION OF KEY TECHNICAL PERSONNEL..... 83
   7.1 Man-hour Contribution of Key Personnel..... 83
   7.2 Resumes..... 83
Table I: Controls, Indicators, and Connectors:
   Monitor Unit..... 84
Table II: Controls, Indicators, and Connectors: DNI..... 88
Appendix I; Resumes of Key Personnel
   Stimson, Francis E.
   Halchak, Joseph
   Mondin, P. J.
   Adams, Robert L.
   Stalder, Ernest W.
   Callender, William L.

LIST OF ILLUSTRATIONS

Figure

1 Monitor Unit, Block Diagram
2 Dialed Number Indicator, Block Diagram
3 Monitor Unit, Main Chassis, Schematic Diagram
4 Input Circuit, 24 Volt Line, Simplified Diagram
5 DC Recovery, Card 400, Schematic Diagram
6 Relay Control, Card 600, Schematic Diagram
7 Audible Alarm, Card 700, Schematic Diagram
8 Warning Tone, Card 500, Schematic Diagram
9 Compressor Amplifier, Card 300, Schematic Diagram
10 Monitor Unit, Power Supply, Schematic Diagram
11 Regulator Amplifier, Card 800, Schematic Diagram
12 Counter Driver, Card 400, DNI, Schematic Diagram
13 Digit Counter, Card 300, DNI, Schematic Diagram
14 Counter, Card 100, DNI, Schematic Diagram
15 Matrix, Card 200, DNI, Schematic Diagram
16 DNI Chassis, Schematic Diagram
17 Monitor Unit
18 Dialed Number Indicator
19 Location of Pluckout Parts, Test Points, and Adjustment Points, Monitor Unit
20 Location of Pluckout Parts, Dialed Number Indicator
21 Test Assembly for Simulating CB or Dial Telephone Line
22 Compressor Amplifier Frequency Response
23 Test Setup for Measuring Longitudinal Balance
24 Radiated Interference
25 Conducted Interference

1. PURPOSE

The purpose of Contract DA36-039-SC-88911 is the design and construction of engineering and service test models of the Monitoring Set, Telephone AN/GTA-13, in accordance with the requirements set forth in SCL-4284. The AN/GTA-13 is a 15 channel monitoring device for use on all types of voice frequency land lines. The service test model of the AN/GTA-13 consists of a device having two major components: the Monitor, Audio Frequency TA-500/GTA-13, herein called the Monitor Unit; and the Indicator, Digital Display ID-1120/GTA-13, herein called the Dialed Number Indicator (DNI). Project activity was divided into four major phases:

Phase 1:		System planning in general block diagram form to establish the operational features needed and to establish compatibility with existing telephone systems.
Phase 2,	Part A:	Translation of the general block diagram into tentative circuit design.
	Part B:	Reliability study based on the tentative circuit design.
Phase 3,	Part A:	Breadboard testing of the circuit design.
	Part B:	Mechanical packaging design.
	Part C:	Construction of engineering test models.
Phase 4:		Construction of service test models.

This final report covers all four phases of work done during the period July 1, 1961, to delivery of the service test models on March 15, 1963.

2. ABSTRACT

Design of the two service test models of the Monitoring Set, Telephone AN/GTA-13 (XE-2) was based on the engineering test models which underwent performance tests and evaluation at USAERDL, Fort Monmouth, New Jersey. Few changes in the original design were necessary.

The AN/GTA-13 monitors any voice frequency land line by means of a two wire connection to a standard switchboard. As many as fifteen lines may be monitored simultaneously. Provision is made for automatic tape recorder control, and a seven digit dialed number can be recorded and displayed. Electrical circuits are transistorized. A battery or ac power source may be used. A reliability study made on the tentative breadboard design resulted in a predicted reliability which more than meets specifications.

Details of basic system requirements, the reliability study, circuit design and development, and mechanical design features are described and discussed in the following report. Typical electrical performance data also are included.

3. REPORTS AND CONFERENCES

3.1 Reports

The following items indicate the title, date, and author of each report supplied under the subject contract.

3.1.1 First Monthly Progress Summary, August 3, 1961, Francis E. Stimson.

3.1.2 Second Monthly Progress Summary, September 5, 1961, Francis E. Stimson.

3.1.3 Third Monthly Progress Summary, October 3, 1961, Francis E. Stimson.

3.1.4 Fourth Monthly Progress Summary, November 2, 1961, Francis E. Stimson.

3.1.5 Fifth Monthly Progress Summary, December 6, 1961, Francis E. Stimson.

3.1.6 Special Report No. 1, "Reliability Study for Multi-line Monitor Set", December 19, 1961, Ernest W. Stalder.

3.1.7 Sixth Monthly Progress Summary, January 3, 1962, Francis E. Stimson.

3.1.8 Seventh Monthly Progress Summary, February 14, 1962, Francis E. Stimson.

3.1.9 Eighth Monthly Progress Summary, March 9, 1962, Francis E. Stimson.

3.1.10 Ninth Monthly Progress Summary, April 9, 1962, Francis E. Stimson.

3.1.11 Tenth Monthly Progress Summary, May 9, 1962, Francis E. Stimson.

3.1.12 Eleventh Monthly Progress Summary, June 3, 1962, Francis E. Stimson.

3.1.13 Certificate of Compliance, June 14, 1962, Francis E. Stimson.

3.1.14 Preliminary Engineering Report, Monitor Set, Telephone, AN/GTA-13(XE-1), Engineering Test Model, June 21, 1962, Francis E. Stimson.

3.1.15 Interim Report, July 1, 1961 to June 15, 1962, submitted July 13, 1962, Francis E. Stimson.

3.1.16 Twelfth Monthly Progress Summary, August 8, 1962, Francis E. Stimson.

3.1.17 Thirteenth Monthly Progress Summary, September 7, 1962, Francis E. Stimson.

3.1.18 Fourteenth Monthly Progress Summary, October 8, 1962, Francis E. Stimson.

3.1.19 Fifteenth Monthly Progress Summary, November 9, 1962, Francis E. Stimson.

3.1.20 Sixteenth Monthly Progress Summary, December 11, 1962, Francis E. Stimson.

3.1.21 Seventeenth Monthly Progress Summary, January 11, 1963, Francis E. Stimson.

3.1.22 Eighteenth Monthly Progress Summary, February 11, 1963, Francis E. Stimson.

3.1.23 Nineteenth Monthly Progress Summary, March 8, 1963, Francis E. Stimson.

3.1.24 Certificate of Compliance, March 14, 1963, Francis E. Stimson.

3.1.25 Final Report, July 1, 1961 to March 15, 1963, submitted March 29, 1963, Francis E. Stimson.

3.2 Conferences

The following is a list of conferences, held during the period July 1, 1961, to March 15, 1963, and concerning the development of the Monitoring Set, Telephone, AN/GTA-13 engineering and service test models.

3.2.1 July 20, 1961, at USAERDL, Fort Monmouth, New Jersey: In attendance were Messrs. J. F. Faughnan and B. J. Lemieux of USAERDL, and Messrs. W. C. Green, F. E. Stimson, and P. J. Mondin of NSL. Basic system details such as operational features, controls, and proposed methods of approach to the design problems were discussed.

3.2.2 August 29, 1961, at NSL, Washington, D. C.: In attendance were Messrs. Nathan Diesenhaus and Vernon Gale of USASCSA, Messrs. J. F. Faughnan and B. J. Lemieux of USAERDL, and Messrs. W. C. Green

and F. E. Stimson of NSL. The purpose of the conference was to review progress in general. The proposed method of telephone line dc recovery was of particular interest.

3.2.3 October 4, 1961, at USAERDL, Fort Monmouth, New Jersey: In attendance were Messrs. J. F. Faughnan, Henry Martinez, Henry Lipschitz, and David Clark of USAERDL, and Messrs. W. C. Green, F. E. Stimson, E. W. Stalder, and P. J. Mondin of NSL. The conference covered two major areas. The first concerned reliability prediction and the scope of the required reliability study. The second subject discussed was that of mechanical packaging. Basic designs that had met requirements successfully were reviewed, and proposed methods of approach for the AN/GTA-13 (XE-1) were discussed.

3.2.4 November 13, 1961, at USAERDL, Fort Monmouth, New Jersey: In attendance were Messrs. J. F. Faughnan and Hyman Schwartz of USAERDL, Mr. Vernon Gale of USASCSA, and Messrs. W. C. Green and F. E. Stimson of NSL. A proposed amendment to the contract, Amendment No. 1, was discussed with particular emphasis placed on the inclusion of NAG-1A/TSEC specification requirements. Clarification of

certain parts of the specification as applied to the AN/GTA-13(XE-1) was necessary. The amendment also proposed making the Dialed Number Indicator a separate unit. NSL concluded that this would present no technical problems. NSL agreed to make additional tests of the proposed design with reference to the requirements of NAG-1A/TSEC.

3.2.5 November 29, 1961, at NSL, Washington, D. C.: In attendance were Mr. J. F. Faughnan of USAERDL, Mr. Nathan Diesenhaus of USASCSA, and Messrs. W. C. Green and F. E. Stimson of NSL. There was further discussion of the implications of proposed contract Amendment No. 1. Mr. Faughnan indicated that there was a possibility that the waterproofing requirement for the AN/GTA-13(XE-1) would be deleted or changed. The effects of the proposed changes on the design to date, and progress in general were discussed. It was concluded by NSL that the proposed changes would mean some increase in funds and contract time.

3.2.6 February 5, 1962, at NSL, Washington, D. C.: In attendance were Mr. J. F. Faughnan of USAERDL, Mr. Nathan Diesenhaus of USASCSA, and Messrs. W. C. Green and F. E. Stimson of NSL. The conference

was held for the purpose of reviewing progress in general. Messrs. Faughnan and Diesenhaus were shown an operating breadboard representing two channels of the Monitor Unit. Noise level tests were made on the amplifier circuits using a noise meter that Mr. Faughnan had brought with him. Some recordings were made of the signal output of the compressor amplifier on a tape recorder also supplied by Mr. Faughnan.

3.2.7 April 9, 1962, at USAERDL, Fort Monmouth, New Jersey: In attendance were Messrs. J. F. Faughnan and Henry Martinez of USAERDL, and Messrs. F. E. Stimson and Joseph Halchak of NSL. The mechanical design of the AN/GTA-13(XE-1) was reviewed and discussed with particular emphasis on several transit case designs submitted by manufacturers in response to an NSL bid request. It was concluded that the 50G transmitted shock limitation, originally required by NSL, could not be achieved given the case volume specified in SCL-4284. A compromise with regard to transmitted shock vs. case volume would have to be made.

3.2.8 May 31, 1962, at NSL, Washington, D. C.: In attendance were Messrs. J. F. Faughnan, Henry Martinez, Daniel Laton, and David Treppel of USAERDL, and

Mr. F. E. Stimson of NSL. Package and transit case design for the final equipment were discussed. The visitors were shown the engineering test models of the AN/GTA-13, which essentially were completed except for the transit case and shock mounting systems. Details relating to maintenance and spare parts were discussed with Mr. Laton, whose primary concern is the logistics aspect of the AN/GTA-13(XE-1). The instruction manual requirements were discussed with Mr. Treppel of the Publications Agency.

3.2.9 June 15, 1962, at USAERDL, Fort Monmouth, New Jersey: In attendance were Messrs. C. A. O'Malley and J. F. Faughnan of USAERDL, and Messrs. F. E. Stimson and J. H. Halchak of NSL. The purpose of the conference was to deliver and demonstrate the AN/GTA-13 engineering test models.

3.2.10 August 8, 1962, at USAERDL, Fort Monmouth, New Jersey: In attendance were Mr. J. F. Faughnan of USAERDL, and Mr. F. E. Stimson of NSL. Preliminary test results of the acceptance tests on the AN/GTA-13 engineering test models were discussed. The engineering test models were delivered to USAERDL on June 15, 1962.

3.2.11 September 21, 1962, at USAERDL, Fort Monmouth, New Jersey: In attendance were Mr. J. F. Faughnan of USAERDL, and Messrs. W. C. Green and F. E. Stimson of NSL. Acceptance test results, deficiencies noted and recommendations made concerning the engineering test models were discussed. Few changes in the engineering test model design were indicated. The most important of these changes concerned the frequency response and crosstalk characteristics of the compressor amplifier and the mechanical mounting system used in the transit cases. It was determined that the recommended changes could be made.

3.2.12 November 6, 1962, at NSL, Washington, D. C.: In attendance were Messrs. Adams, Moyer, Lloyd, Goodman, Damaszek, Barden, Massey, Ritter, Doodie, and Parrish of ASA; Lt. Harmon of NSA; Mr. Bryant of the Office of Naval Intelligence; Lt. Kane of the Naval Security Group; and Messrs. Green and Stimson of NSL. The conference was held at the request of USAERDL in order to demonstrate the purpose and capabilities of the AN/GTA-13 to the above representatives of the several interested government agencies. A lecture on the basic theory of operation and a practical demonstration of the AN/GTA-13 in use was given by Mr. Stimson.

3.2.13 November 20, 1962, at NSL, Washington, D. C.: In attendance were Mr. David Treppel of USAEMSA, Mr. J. F. Faughnan of USAERDL, Mr. Jack Adams of ASA, and Messrs. W. C. Green and F. E. Stimson of NSL. General contract progress was reviewed and the performance of the modified compressor amplifier circuit was demonstrated. Content and other requirements for the AN/GTA-13(XE-2) instruction manual were discussed with Mr. Treppel.

3.2.14 January 15, 1963, at NSL, Washington, D. C.: In attendance were Mr. J. F. Faughnan of USAERDL and Mr. F. E. Stimson of NSL. The purpose of the conference was to review progress on the contract. The probability of a delay caused by late delivery of Elco Corporation connectors was discussed and Mr. Faughnan volunteered the assistance of the USAERDL component section in obtaining the connectors.

3.2.15 March 15, 1963, at USAERDL, Fort Monmouth, New Jersey: In attendance were Messrs. J. F. Faughnan and C. A. O'Malley of USAERDL, Mr. David Treppel of USAEMSA, and Messrs. F. E. Stimson and J. H. Halchak of NSL. The primary purpose of the trip was delivery of the AN/GTA-13 service test models to USAERDL. Changes made by USAEMSA in the instruction manual

illustrations were discussed and it was mutually agreed that certain changes were not required for acceptance of the illustrations.

4. FACTUAL DATA

4.1 General System Considerations

The AN/GTA-13 was designed to monitor a subscriber telephone line by means of a two wire connection to the line at a switchboard main frame.

Voice frequency (VF) monitoring on any telephone system is accomplished by bridging the line with an amplifier of relatively high input impedance so as not to load the line appreciably. The VF signal appearing on a line may range from -30 dbm to +10 dbm. A compressor amplifier is incorporated into the AN/GTA-13 to keep the output signal range within approximately -15 dbm to +4 dbm. This signal level range is compatible with any recorder that may be used.

In addition to VF signals, the AN/GTA-13 must detect the dc condition of a common battery, manual or automatic line in order to operate a supervisory line indicator lamp and to record dialing information.

A study of the various domestic and foreign systems in use showed that line battery voltages of 24, 48, and 60 volts are normally used. The dc recovery circuits of the AN/GTA-13 were designed with these systems in mind. The AN/GTA-13 will operate satisfactorily on line voltages between 24 and 60 volts if the telephone line resistance does not approach the limiting value for satisfactory switchboard operation. The reasons for this are discussed further in paragraph 4.10.1.2.

Due to the many types of systems with which the AN/GTA-13 must be compatible, the dc recovery circuits were designed to operate on either polarity of line battery voltage without reference to earth ground.

The fifteen AN/GTA-13 channels operate independently, and any combination of line types may be monitored by proper switching of the dc recovery circuits.

A recorder control feature in each channel operates a relay when the VF signal on a line exceeds -30 dbm. The relay contacts can be used for automatic control of a recorder. The control relay remains energized for approximately 30 seconds after a line signal ceases. During operation on a ringdown line, there is no dc supervisory signal present. In this mode of operation, the AN/GTA-13 line indicator lamp is operated by a VF line signal. The recorder control circuits are utilized for this purpose; therefore, the line indicator lamp operates under the same conditions and for the same interval as the recorder control relay.

A ringing signal will operate the line indicator lamp; and therefore, will indicate the initiation of a call on ringdown lines. The termination of a call on ringdown lines normally is indicated by a ringoff signal; but due to the random timing and sequence of ringing signals, the AN/GTA-13 is unable to use this information. Supervisory indication on ringdown lines assumes that a call has been terminated if no signal appears on the line for 30 seconds.

4.2 Component Selection and Reliability

A reliability study was conducted on a tentative circuit design for the AN/GTA-13. The resulting report containing a detailed account of this study, in accordance with MIL-STD-441, Phase I, was submitted to USASRDL on December 19, 1961. As the reliability study progressed, component operating conditions were reviewed and modified where necessary to achieve the highest reliability factor consistent with space and cost requirements.

4.2.1 General

The reliability study was based mainly on the prediction of catastrophic failures, those failures resulting from complete failure of a component due to shorts, open circuits, voltage breakdown, etc. It is difficult, if not impossible, to assign a failure rate figure to a component which causes equipment failure due to small parameter change because, in this case, failure is too dependent upon the circuit design. It must be assumed that the designer has used the component in a circuit which can tolerate the expected parameter change. Since transistor parameters are particularly sensitive to temperature changes, a temperature test is an excellent check on circuit operation with varying circuit parameters. The breadboarded circuits, on which the reliability study was based, were tested at temperatures from -25°F to +158°F and were found to operate satisfactorily. For these reasons, the failure mode was assumed to be one of catastrophic failures

of the components.

The maximum ambient temperature specified for use of the Monitor Set is 125°F. The maximum temperature inside the set will not exceed 140°F. For the purpose of providing conservative circuit design and reliability data, failure rates for the components of the AN/GTA-13 were obtained assuming a maximum environmental temperature of 158°F.

4.2.2 Transistors

Transistor failure rates are dependent primarily on the total power dissipation. The method of calculating power dissipation in the transistors varied with the application being considered. Where the dissipation rate was not constant, worst case conditions were used for reliability analysis.

Germanium transistors were used in the AN/GTA-13 except for special applications which required high power or low leakage transistors. Silicon transistors were used in high power portions of the power supply and in timing circuits where leakage currents have a detrimental effect. Silicon transistors also were used in the Nixie tube number indicator circuits where a relatively high voltage, low leakage transistor is required.

All transistors were selected from the preferred types listed in SCL-6200. The majority of the switching circuits utilized PNP type 2N404 and NPN type 2N388 transistors. These two transistor types are used widely and are inexpensive and reliable. The audio

frequency circuits utilized PNP type 2N466 and 2N526 transistors. Where low power silicon transistors were required, types PNP 2N327A and NPN 2N696 were used.

For power supply applications, types 2N1489, 2N1483, and 2N1183B transistors were used.

4.2.3 Diodes

Assuming that inverse voltage and forward current ratings are not exceeded, the power dissipated by a semiconductor diode determines the failure rate. Worst case conditions were used in calculating the power level for the reliability analysis.

All semiconductor diodes used in the AN/GTA-13 were selected from the preferred types listed in SCL-6200.

The reliability study was performed with IN198 germanium diodes for most low power applications. Later in the development phase, it was decided to use IN457 silicon diodes in all low power applications. This decision was prompted by the need for silicon diodes in some applications. The IN457 diode is a widely used type and costs less than the IN198.

Several types of the 400 mw, IN600 and IN700 series of Zener diodes were used. One watt Zener diodes IN3040B and IN3014 were used for certain power supply applications. Silicon rectifiers IN250B and IN540 were used in the power supplies.

4.2.4 Resistors

The majority of the resistors used in the AN/GTA-13 are 1/4 watt, carbon composition, MIL-R-11C resistors. Metal film resistors type RN65B were used in the warning tone timing circuits. Resistors conforming to MIL-R-18546C were used in a few power supply applications.

4.2.5 Capacitors

Depending on value, voltage rating required, and size considerations, capacitors of various dielectrics were used. The types used and the applicable specifications covering those types are as follows:

1)	Mica capacitors	MIL-C-5
2)	Paper capacitors	MIL-C-25
3)	Tantalum capacitors	MIL-C-26655A

A power supply filter capacitor conforming to specification MIL-C-62, which covers values to 1000 μf, could not be obtained. However, the capacitor used is a high reliability computer type 32D, manufactured by Sprague Electric, and should meet or exceed the necessary requirements.

Due to space limitations, tantalum capacitors were used in most applications that required capacitances greater than can be obtained in small mica capacitors.

In the past, these have had typically higher failure rates than mica or paper capacitors. However, due to the recent missile

reliability program, manufacturers are producing more reliable tantalum capacitors. The tantalum capacitors used in the AN/GTA-13 have predicted failure rates of from 0.005 to 0.01 percent per 1000 hours, indicating a high level of reliability for this type of capacitor.

4.2.6 Miscellaneous

The transformers, relays, switches, connectors, lamp holders, and other components were selected to conform to applicable specifications.

4.2.7 Results of the Reliability Study

The reliability requirement for the AN/GTA-13 is described by a required mean-time-between-failure (MTBF) of 700 hours, and a 90 percent probability of survival for 72 hours. Since the failure rate is assumed to be constant, these two factors essentially specify the same requirement. That is, the reliability R is defined as:

$$R = e^{-t/m}$$

where m = MTBF

if $m = 700$ hours, and $R = 0.90$, then

$$0.90 = e^{-t/700}$$

thus, $t = 73.5$ hours

Reliability analysis of the AN/GTA-13 resulted in the prediction of an overall failure rate of 92.9 percent per 1000 hours, which corresponds to an MTBF of 1075 hours. This means that there

is a 90 percent probability of survival for 113 hours.

4.3 Circuit Description. General

The AN/GTA-13 originally was required to be a single unit with provision for monitoring as many as five lines simultaneously with the Dialed Number Indicator. Amendment No. 3 to SCL-4284, dated 4 December 1961, made the Dialed Number Indicator a separate equipment capable of monitoring fifteen lines simultaneously.

The circuits used in the service test models of the AN/GTA-13 are described in the following text. Few changes in the engineering test model design were necessary. Where changes were made, the changes and reasons for the changes are given.

The basic functions provided by the set are given in paragraphs 4.6 and 4.7. Paragraphs 4.8 and 4.9, in conjunction with figures 1 and 2, give a block diagram analysis of stage-by-stage signal flow. A detailed schematic analysis is given in paragraph 4.10.

4.4 Component Numbering System

The component numbering system used in the AN/GTA-13 is as follows:

4.4.1 Monitor Unit

0-299 -- chassis mounted components
300-399 -- card 300, compressor amplifier
400-499 -- card 400, dc recovery
500-599 -- card 500, warning tone
600-699 -- card 600, relay control

700-799 -- card 700, audible alarm
800-899 -- card 800, regulator and earphone amplifiers

4.4.2 Dialed Number Indicator (DNI)

0-99 -- chassis mounted components
100-199 -- card 100, counter
200-299 -- card 200, matrix and indicator drivers
300-399 -- card 300, digit counter
400-499 -- card 400, counter driver

4.5 Controls, Indicators, and Connectors

The controls, indicators, and connectors of the AN/GTA-13 are listed in Tables I and II with a brief description of the funtion of each item.

4.6 Primary Circuit Functions, Monitor Unit

4.6.1 DC Recovery

The dc recovery circuits consist of input mode switching and card 400 circuits, which together perform the following functions:

1) Detect the dc condition of a CB telephone line using 24, 48, or 60 volt battery of either polarity without relying upon earth ground as a reference.
2) Translate the dc conditions of the line into a supervisory signal to drive a LINE indicator lamp.
3) Regenerate line dial pulse information for recording and presentation by the DNI unit.
4) Provide a drive pulse which operates the audible alarm

circuit when a call is initiated on the monitored line.

4.6.2 Line Selector Circuits

These circuits are located on card 600 and provide selection of the line whose dial pulse information is to be recorded and displayed by the DNI.

4.6.3 Voice Frequency Monitoring

The compressor amplifier (card 300) input bridges the monitored line and provides the following functions:

1) Keeps output signal level to tape recorder between -15 and +4 dbm with an input level between -30 and +10 dbm.
2) Supplies a source of the monitored signal to the earphones.
3) Supplies a source of the monitored signal for operating the recorder control circuits.
4) Provides a path for injection of the warning tone into the monitored line.

4.6.4 Warning Tone

A standard 1,400 cps warning tone is generated by card 500 and is fed to each card 300 for injection into the monitored line.

4.6.5 Recorder Control

The recorder control relay circuits on card 600 detect a line signal greater than -30 dbm and operate a relay whose contacts are used for automatic control of a tape recorder.

4.6.6 Earphone Amplifier

An earphone signal amplifier on card 800 in conjunction with a 15 position switch, allows the operator to select one of the 15 channels for earphone monitoring.

4.7 Primary Circuit Functions, DNI

4.7.1 Counter Driver

The counter driver card 400 receives dial pulse information from the Monitor Unit and presents reshaped pulses to the counter circuits. Card 400 also recognizes the pause between digits of a telephone number and operates the digit counter card 300.

4.7.2 Digit Counter

The digit counter card 300 receives a pulse from card 400 (above) after each digit of a dialed telephone number. As the digits are counted by card 300, its output, which corresponds to the digit being dialed, is used to shift the dial pulses into the counter (card 100), i. e., the first digit into the first counter, the second digit into the second counter, etc.

4.7.3 Counter

There are seven counter cards 100, each of which counts the pulses in one digit of a seven digit telephone number. Each counter is a four stage binary type using flip-flops.

4.7.4 Matrix Card and Indicator Drivers

The output of each counter card 100 drives a matrix card 200, which translates the binary count into decimal form. The matrix output lights one of ten digits in a Nixie B-4032 indicator tube.

4.7.5 Reset

The reset driver is located on card 400 and supplies a signal which resets the counters in the DNI and the line selector circuits in the Monitor Unit.

4.8 Block Diagram, Monitor Unit, Figure 1

4.8.1 DC Recovery

The primary functions of the dc recovery circuits are to monitor and translate the dc condition of a telephone line into a supervisory lamp drive signal, and to reconstruct the dial pulse information for use by the DNI. The dc component of the line input signal is fed to a chopper Q403, Q404 through the input mode selector circuits. The four position INPUT MODE SWITCH and associated voltage dividers enable the chopper to accommodate 24, 48, or 60 volt telephone lines. In the first position the INPUT MODE SWITCH disables the dc recovery input circuits when monitoring ringdown lines which carry no dc supervisory signals. The chopper, driven by 8 kc oscillator Q401, Q402 samples a dc voltage when the monitored telephone is off hook. Dialing impulses cause a similar shift in dc voltage. The low level, on hook, 8 kc

chopper output is amplified by Q405 and Q406. Complementary emitter followers Q407 and Q408 furnish a low impedance drive signal to rectifier CR403. CR403 rectifies the 8 kc signal providing either a dc voltage representing on hook line condition or no voltage representing off hook line condition. The first trigger circuit Q409, Q410 operates upon the dc shift and reshapes the signal for use by the dial pulse gating system. In the ringdown mode, a connection through the INPUT MODE SWITCH holds the first trigger circuit in its on hook condition causing the line indicator lamp to remain OFF unless voice operated by the recorder control circuits (paragraph 4.8.6). Composite supervisory and dial pulse information appears at the output of the first trigger circuit and is fed to the second trigger circuit, however, only the supervisory information operates the second trigger if gate Q411 is energized. Gate Q411 introduces an RC time constant in the input to the second trigger circuit which keeps dial pulses from operating the trigger. The second trigger circuit operates a line indicator lamp through lamp driver transistor Q414, providing a visual off hook indication.

4.8.2 Line Selection

Since the AN/GTA-13 monitors up to 15 lines simultaneously for dialing information, a line selection system is used. This system selects the first supervisory signal (off hook) that appears on any line and rejects dialing information on all other

lines until manually reset. There is a line selector flip-flop Q608, Q609 for each of the 15 lines. Assume that all 15 flip-flops have been reset manually and each is ready to accept a supervisory signal from its respective line via the second trigger circuit Q412, Q413 and supervisory gate CR408, CR606. Dial pulse AND gate CR409, CR608 is held closed by its input from the line selector flip-flop. When a supervisory signal (off hook) appears on any line, the corresponding line selector flip-flop changes state and the output from transistor Q609 opens the dial pulse AND gate which allows any subsequent dial pulses on the selected line to pass through the gate. The outputs of all dial pulse AND gates are connected through OR gate diodes CR609 to an emitter follower Q701, common to all channels. The output of Q701 is the dial pulse information which drives the DNI. The output of the triggered line selector flip-flop transistor Q608 connects through OR gate diode CR610, and gate driver Q706, and closes all supervisory AND gates. With all supervisory AND gates closed, the occurrence of a supervisory signal on any other line cannot trigger the corresponding line selector flip-flop. Therefore, the dial pulse AND gates for all lines except the selected line remain closed and cannot pass dial pulse information. The above condition remains until the triggered line selector flip-flop is manually reset by a pulse from the DNI RESET switch. When reset, the line selector flip-flop closes the dial pulse gate and opens all supervisory gates. The occurrence of a supervisory signal on any line will

then pass through the corresponding supervisory gate and trigger its line selector flip-flop. Any combination of lines may be disabled by operating the appropriate DIALED NUMBER INDICATOR switches to OFF. This holds the corresponding line selector flip-flop in the reset condition. As described above, gate Q411 when energized, keeps the dial pulses from reaching the line indicator lamp. Gate Q411 is energized by the line selector flip-flop in its reset mode, however, when the line selector flip-flop is triggered, transistor Q411 is de-energized allowing dial pulses to reach the line indicator lamp causing it to blink. A blinking indicator lamp shows which of the fifteen lines is being recorded by the DNI.

4.8.3 Audible Alarm

An alarm is provided which gives an audible indication of the occurrence of a supervisory signal on any line. The output of lamp driver Q414 triggers alarm control flip-flop Q702, Q703 through delayed AND gate CR407. Delayed AND gate CR407 closes after the first supervisory pulse occurs in order to keep subsequent dial pulses from re-triggering the alarm control flip-flop should it be reset before dialing is completed. When triggered, the alarm control flip-flop energizes alarm oscillator Q704 which feeds alarm amplifier Q705. Amplifier Q705 drives the loudspeaker. The alarm is stopped by operating the ALARM RESET switch to RESET.

4.8.4 Voice Frequency Monitoring

The voice frequency component of a line input signal is fed to first amplifier Q302 whose output feeds a compressor network containing variable resistance diodes CR303 and CR304. The output of the compressor network feeds second amplifier Q303 whose output is fed back to the compressor network as a dc current supplied by compressor feedback amplifier Q308 and bridge rectifiers CR305 through CR308. This compressor loop serves to keep the signal level at the output of second amplifier Q303 relatively constant with a wide variation in input signal levels. Output amplifier Q304 supplies a 600 ohm VF output signal for recording purposes. A portion of the signal from the output amplifier of each channel is fed to a 15 position rotary switch. The rotary switch is used to select the line whose signal feeds the earphone volume control. The VF signal at the volume control is amplified by earphone output amplifier Q804 which drives the operator's earphones.

4.8.5 Warning Tone

The warning tone consists of a 200 msec burst of a 1400 cps signal every 15 seconds. The 200 msec oscillator gate pulse is generated by a free-running multivibrator using transistors Q502 and Q503. Emitter followers Q501, Q504, and Q505 are used as current amplifiers to minimize loading effects on the multivibrator RC time constants. The oscillator gate pulse turns on the 1400 cps warning tone oscillator Q507, Q515 by means of emitter

follower Q506 and Gate Q511. Emitter followers Q508, Q509, and Q510 provide a low impedance source of warning tone signal which is distributed to the warning tone amplifier/gate Q305, of each channel. The warning tone amplifier/gate and emitter followers Q306 and Q307 apply the warning tone signal to the monitored line through the line input connection. The warning tone is passed by amplifier/gate Q305 only when the line is in use as determined by the presence of a gate signal from lamp driver Q414. The warning tone may be manually disabled by operating the WARNING TONE switch to OFF. A small amount of warning tone signal also is fed to the compressor feedback amplifier Q308. This reduces the gain of the VF compressor amplifier so that the warning tone level at the output to tape recorder is at the same level as that applied to the monitored line.

4.8.6 Recorder Control

A relay controlled by line VF signals provides automatic control of a recorder. The relay operates when a line signal exceeding -30 dbm is detected, and once operated, holds for approximately 30 seconds after line signals cease. A VF signal is taken from first amplifier Q302 by emitter follower Q301 and is amplified by relay signal amplifier Q601. Trigger circuit Q602, Q603 operates when its input signal exceeds the level produced by a line signal of -30 dbm. The trigger circuit is used to produce a square wave signal of constant output regardless of input level

once the triggering threshold is exceeded. The output of the trigger circuit charges a capacitor in the input circuit of timing circuit Q605, Q606 through emitter follower Q605. Upon receipt of a charging signal, timing circuit Q605, Q606 changes state and energizes the recorder control relay through relay reiver Q607. Any time a line signal exceeds -30 dbm, the capacitor in the timing circuit is recharged, thus starting a full 30 second timing interval. If the line signal ceases for 30 seconds, the timing circuit returns to its original state, de-energizing the recorder control relay. The relay contacts are made available through a radio interference filter. A RECORDER CONTROL switch is provided for disabling the automatic recorder control. A connection from the output of relay driver Q607 to the input of the dc recovery second trigger circuit Q412, Q413 is made through the INPUT MODE SWITCH in the ringdown mode position. This puts the line indicator lamp under the control of the relay circuits which then operate the lamp in the presence of line VF signals. This is necessary in ringdown operation because there is no line dc to provide direct supervision. The warning tone, when fed to the monitored line, appears as a signal greater than -30 dbm and will operate the relay control circuits. Since, in the ringdown mode, the warning tone gate signal is supplied by lamp driver Q414, and the lamp driver operates on a command from the relay driver Q607, the warning tone would not allow the relay control to de-energize.

To avoid this, an 800 msec gate pulse renders trigger circuit Q602, Q603 inoperative each time a warning tone burst is due to appear. This pulse is supplied by pulse amplifier Q514 and is generated by one-shot multivibrator Q512, Q513. The one-shot multivibrator is triggered by the leading edge of each 200 msec warning tone oscillator gate pulse from multivibrator Q502, Q503.

4.8.7 Power Supply

The unregulated +24 v dc power for the Monitor Set may be derived either from a transformer, rectifier system supplied by 115 or 230 v ac, 60 cps or directly from a 24 v dc battery or vehicular supply. The +24 v dc is reduced by series regulator Q1 to a regulated +15 v dc. Error signal feedback for regulation is provided by differential amplifier Q802, Q803, amplifier Q801, and regulator driver Q2.

4.9 Block Diagram, DNI, Figure 2

4.9.1 Counter Driver

The dial pulses from the Monitor Unit enter trigger circuit Q401, Q402 where they are re-shaped and fed to emitter follower Q403. An output of emitter follower Q403 feeds one input of each of the seven counter AND gates CR101. The other output of Q403 operates delayed trigger Q404, Q405. The output of the delayed trigger changes state upon receipt of a series of dial pulses representing one digit of a telephone number. The time constant

of the trigger circuit is such that it cannot return to its original state between dial pulses but does return during the pause between dialed digits.

4.9.2 Digit Counter

The trailing edge of the delayed trigger pulse, therefore, represents the end of each digit of a number and is fed to a digit counter through AND gate CR325. Assume that gate CR325 is open and can pass the pulse. The pulses representing the end of each digit are counted by a three stage binary counter using bistable flip-flops, Q301 through Q306. The digit counter flip-flops feed six input lines of a diode matrix CR301 through CR324. The matrix translates the binary count to decimal form and energizes matrix output lines 1 through 7 in turn as the seven digits of a telephone number are dialed.

4.9.3 Dial Pulse Counter

Each of the seven matrix output lines is used as the enabling input to an AND gate CR101 which feeds the seven, four stage dialed number counters. As described above, the other input to each gate CR101 is the dial pulse line from Q403. The digit counter and associated matrix, therefore, routes the first digit dial pulses to the first counter, the second digit to the second counter, etc., until the seventh and last digit has been dialed. At this time, the eighth matrix line closes gate CR325 to keep any further pulses from changing the number already displayed by

the DNI. Assume that line one of the digit counter matrix is energized and AND gate CR101 of the first counter is open, awaiting receipt of the first digit of a telephone number. When the first digit is dialed (assume the number 5), the pulses are counted by a four flip-flop binary counter, Q101 through Q108.

4.9.4 Indicator

The count in binary form is fed to an eight input diode matrix CR201 through CR235. The matrix translates the count to decimal form and energizes the 5th line of ten output lines. The energized 5th line lights the corresponding numeral in a 0-9 indicator tube through a driver transistor Q205. At the end of the first digit, the digit counter closes AND gate CR101 for the first counter and opens AND gate CR101 for the second counter. The second through the seventh digit are counted and displayed in the same manner as described for the first digit.

4.9.5 Feedback Driver

Feedback driver Q109 in each counter is used to keep the counters from counting past 10. Certain counts greater than 10 would result in two or more indicator numerals being lighted should extraneous pulses enter the Monitor Unit due to a defective telephone dial, or a bad connection, etc.

4.9.6 Reset

The stored count in the digit counter and the seven dial pulse counters is removed by a 350 msec reset pulse generated by reset multivibrator Q406, Q407. The multivibrator is manually triggered by operating the RESET pushbutton. The reset pulse returns each flip-flop to its zero state through a reset diode connected to the proper collector of each flip-flop. The RESET switch is a two pole switch. The second pole provides a pulse which resets the line selector flip-flops in the Monitor Unit.

4.9.7 Power Supply

Power for the transistor circuits comes from the Monitor Unit +24 v dc and regulated +15 v dc supplies. The number indicator tubes require +180 v dc which is supplied by a transistor dc to dc converter Q1, Q2 powered by +24 v dc. The oscillator output is transformed to a higher voltage, rectified by CR1 through CR4 and fed to the indicator tubes as +180 v dc.

4.10 Detailed Schematic Analysis

4.10.1 DC Recovery

4.10.1.1 Initial Methods

One of the originally proposed methods is operated on a line voltage change detected by a high resistance, parallel line connection. When a line is not in use, the voltage at the point of connection of the main frame reaches battery voltage minus some small voltage loss in the switchboard resistance due to subscriber

line leakage current. In the off-hook condition, line current in the subscriber circuit produces a voltage decrease at the point of connection. The voltage drops to less than half the nominal battery voltage.

A fraction of this voltage change is supplied by a load isolating resistance pad fed the input of a dc amplifier. A relay was energized by the dc amplifier and provided a supervisory signal source. The relay isolated the monitored line potentials from ground and from the monitor circuits. The dc amplifier was powered by its own transistorized power converter, thus affording complete dc isolation of the dc recovery circuits. This method was not adopted for the following reasons:

1) At least one-half watt of power for each detector would be required.
2) Stability of dc amplifier and power converter would be a problem.
3) Relay reliability is inherently poor.
4) High level signals produced by the power converter oscillator would be difficult to isolate from the line.

Consideration was given to using a sensitive relay, operated directly in parallel with the line. Several circuits were tried but were unsuccessful. A relay sensitive enough to not load the line excessively is by nature a large delicately adjusted unit with high-inductance coils. The size and fragility of such a device is reason enough to prohibit its use. It became obvious

also that an ultra-sensitive relay had operate and release times of 50 to 100 msec, and therefore, could not follow dial pulses.

Dial pulsing could be detected by other means, but the supervisory function would depend upon a relay. Mechanical limitations of the relay caused both of these ideas to be rejected.

Another method, utilizing transformer ac coupling to the line, was breadboarded. In this system, the telephone line voltage transitions were used to operate a bi-stable circuit. Although this circuit was made relatively insensitive to random line transients of short duration, a transient of long duration, such as would be caused by lightning or even a ringing signal on the line, occasionally would leave the supervisory lamp in the wrong condition. This system also was rejected.

4.10.1.2 Final DC Recovery Input Circuits, Figures 3, 4 and 5

The dc recovery method used utilizes a transistorized low level chopper, which samples a small portion of the telephone line voltage. A simplified diagram of the chopper input circuits is shown in figure 4. The component values in figure 4 are those which are in the circuit when the INPUT MODE switch is set for 24 volt line monitoring.

When the line is in the on-hook condition (telephone handset on hook) the voltage at the line connection is approximately 24 volts. Current through the resistor-Zener diode combination results in a voltage drop of approximately 150 mv across R403.

This is the voltage which is sampled by the chopper. When the line is in the off-hook condition, the voltage at the line connection drops to less than 12 volts. Since a 12 volt Zener diode is in the series circuit, all of the voltage appears across the Zener diode, and the voltage across R403 drops to zero. Therefore, the chopper samples a voltage which is either 150 mv or zero, for telephone circuits with subscriber lines of varying lengths.

A study of several types of switchboards has shown that the maximum loop resistance that can be tolerated does not exceed the central office resistance. The assumption of equal loop and central office resistance therefore was taken as the worst case condition under which the Monitor Unit will be required to operate. It can be seen that, in a 24 volt system, if the loop and central office resistance is equal (representing a long line), off-hook voltage at the point of monitor connection will be 12 volts, and zero volts will be presented to the chopper.

Two Zener diodes (CR88 and CR91), connected in opposite polarities, are used in the circuit so that the dc recovery circuit will operate on either line battery polarity. The preceding discussion was based on 24 volt operation. In 48 and 60 volt systems, the voltage across sampling resistor R403 is maintained at the zero and 150 mv levels by switching to appropriate series resistors and Zener diodes. This is done by the INPUT MODE switch (figure 3).

It should be pointed out that the Monitor Unit will operate on line battery voltages between the normal 24, 48, and 60 volts

if the subscriber line resistance does not approach the limit. On foreign systems, for instance, if the battery voltage is 24 to 40 volts, the 24 volt INPUT MODE switch position should be used. For 40 to 55 volt systems, the 48 volt position should be used. For systems 55 volts or higher, the 60 volt position should be used.

Capacitors C31 and C32 (figures 3 and 4) are used to keep the 8 kc chopper signal from being fed back into the monitored line.

4.10.1.3 DC Recovery, Card 400, Figure 5

The chopper and the remainder of the dc recovery circuits are located on card 400. As was described in paragraph 4.10.1.2, the on-hook voltage appears across resistor R403 as approximately 150 mv. This voltage is sampled at an 8 kc rate by chopper transistors Q403 and Q404. The chopper transistors receive their square wave base drive signal through transformer T401 from a free running multivibrator (transistors Q401 and Q402) which operates at a nominal 8 kc rate. The chopped 150 mv is transformed to a chassis reference through transformer T402. Since transistors Q403 and Q404 operate at a low level and receive adequate base drive current, the chopper operates equally well on either polarity of the dc line voltage which appears across resistor R403.

The 8 kc signal appearing at the secondary of transformer T402 is amplified by a highly stabilized amplifier made up of

transistors Q405, Q406, Q407, and Q408. This ac signal then is rectified by diode CR403 and filtered by capacitor C407 to remove most of the 8 kc component. The dc voltage thus obtained furnishes current to the base of transistor Q409. Transistors Q409 and Q410 make up a trigger circuit whose output corresponds to the telephone line dc condition. When the 8 kc signal is present (on-hook condition), the emitter of transistor Q410 is near +15 volts. When the 8 kc signal is not present (off-hook condition), the base of transistor Q409 receives no drive current, and the emitter of transistor Q410 is near ground. The signal through diode CR409 at pin 400-21 (card 400, pin 21) is therefore a reconstruction of the supervisory and dial pulses which appear on the monitored line. The signal at this point is not used for supervisory purposes, however. The filtering action of resistor R420 and capacitor C407 keep transients, which are considerably shorter than dial pulses, from operating the circuit.

The voltage appearing at the emitter of transistor Q410 is coupled through diode CR404, resistor R425, and resistor R431 to the base of transistor Q412. Transistors Q412 and Q413 combine to form another trigger circuit. The output of transistor Q413 drives a supervisory lamp (LINE indicator lamp, figure 3) through driver transistor Q414.

Transistor Q411 and associated circuits keep the LINE indicator lamp I16 from blinking on and off during dialing impulses, unless the channel being analyzed is the one being recorded by

the DNI. Assume for the moment that the channel under discussion is not being recorded. The voltage at pin 400-12 is near zero, thereby supplying base current to transistor Q411 through diode CR405 and resistor R427. The collector to emitter junction of transistor Q411 then can provide a low impedance path for capacitor C408 to the +15 volt line. In the off-hook condition, the emitter of transistor Q410 is near zero volts, therefore capacitor C408 changes to almost 15 volts through diode CR404 and resistor R425. During a series of dial pulses, the voltage at transistor Q410 emitter switches toward +15 volts in a series of pulses. During the series of pulses, the time constant of capacitor C408 and resistor R431 through the base of transistor Q412 is sufficiently long to keep transistor Q412 saturated between pulses. The LINE indicator lamp therefore remains on during dial pulses. If the channel under discussion is to record dial pulses, then the voltage at pin 400-13 is near +12 volts and transistor Q411 is turned off. Capacitor C408 no longer has a low impedance return through transistor Q411, and the dial pulses couple through transistors Q412, Q413, and Q414 causing the LINE indicator lamp to blink at dial pulse rate.

Gating diode CR407 furnishes a negative going pulse from the collector of transistor Q414 to audible alarm card 700 (paragraph 4.10.4) each time the LINE indicator lamp indicates that a line has been picked up. The RC network in the emitter circuit of transistor Q414 disables the gate after one pulse, so that dial

pulses will not re-trigger the alarm after it has been reset manually.

In the ringdown mode of operation, 24 v dc power is removed from the chopper oscillator transistors Q401 and Q402 by the INPUT MODE switch S64 (figure 3). The INPUT MODE switch also connects the base of transistor Q409 to zero volts through pin 400-14 and resistor R439 to keep the LINE indicator lamp off unless it is operated by the relay control circuit (paragraph 4.10.8). In this mode of operation, the LINE indicator lamp is operated by a negative going signal derived from relay control card 600 through the INPUT MODE switch and pin 400-15.

The dial and supervisory output signals used for dialed number recording appear at pins 400-21 and 400-20, respectively.

4.10.1.4 Modification, Card 400, Figure 5

Tests made on the service test model of the dc recovery cards revealed borderline operation of the line selector flip-flop transistors Q608 and Q609 (paragraph 4.10.2), when triggered by the supervisory output signal. This signal is generated by trigger circuit transistors Q412 and Q413 (paragraph 4.10.1.3). It was discovered that, although the supervisory pulse had sufficient final amplitude, the leading edge rise time was slowed considerably by the loading reflected to the supervisory signal (emitter of Q413) by the initial low resistance of the supervisory lamp. A 1.5 k ohm resistor, R429, was added between the emitter of

Q413 and the base of Q414 to help isolate the trigger circuit from lamp loading.

4.10.2 Line Selection, Card 600, Figure 6.

Since the AN/GTA-13 monitors up to 15 lines simultaneously for dialing information, a line selection system is used. This system selects the first supervisory signal (off-hook) that appears on any line and rejects dialing information on any other line until manually reset. The line selector circuits are physically located on card 600.

A bistable multivibrator (flip-flop) for each of the 15 lines, transistor Q608 and Q609, provides the basic logic element for line selection. Assume that all 15 flip-flops have been reset manually and that they await a supervisory signal from any line. In the reset condition, the collector of flip-flop transistor Q608 is at 12 volts; the collector of transistor Q609 is at 2 volts. The collectors of all the 15 Q608 transistors are connected, through OR gate diodes CR610 and pin 600-11, to the base of emitter follower Q706 through pin 700-1 (card 700, figure 7). The emitter follower Q706 through pin 700-4 is connected in turn to all AND gate diodes CR606 through pin 600-10. In the on-hook condition, all cards 600 have near zero volts at pin 600-5 because of the connection to the supervisory signal output (pin 400-20). When a supervisory signal (off-hook) is received on any line, the signal at pin 600-5 switches toward +15 volts. This positive transition

couples through capacitor C605 and changes the selector flip-flop associated with that line to the SET condition. The transistor Q608 collector of that flip-flop is now at 2 volts. The voltage at the junction of resistors R621 and diodes CR606 of all channels is shifted to 2.5 volts by the coupling through all the CR606 diodes, transistor Q706, and diode CR610 to the collector of transistor Q608 of the SET flip-flop. Since this action causes the junction of diode CR606 and resistor R621 of all cards to be held at 2.5 volts, the occurrence of another supervisory signal on any line cannot cause a positive going pulse to operate the associated flip-flop. The collector of transistor Q609 of the SET flip-flop is now at 12 volts, and through its connection through pins 600-13 and 400-13 to Q411, allows the associated LINE indicator lamp to blink during dialing (paragraph 4.10.1.3).

Any combination of the 15 channels may be monitored simultaneously by operating the Monitor Unit DIALED NUMBER INDICATOR switches to the appropriate position (figure 3). These switches in the OFF position hold the selector flip-flop transistors Q608 and Q609 of the disabled channels in the reset condition through pin 600-8.

The selector flip-flops are reset manually by momentarily pulling the collector of each flip-flop transistor Q608 toward 15 volts. This is done by a positive going signal which originates in the DNI (paragraph 4.10.16) and is received through pin 600-11 and OR gate diodes CR610.

4.10.3 Dial Pulse Gating, Card 600, Figure 6.

Since only the selector flip-flop (transistors Q608 and Q609) associated with the channel to be recorded on the DNI is operated at any given time, its transistor Q609 collector signal is used as one input (diodes CR608) to a series of 15 AND gates. The other input to each AND gate (pin 600-7) is the dial pulse information derived from its corresponding dc recovery card (400-21, paragraph 4.10.1.3). The output of all 15 AND gates (diodes CR608 and CR409) are combined in a 15 input OR gate made up of 15 diodes CR609.

When all line selector flip-flops are in the reset condition, the collector (transistor Q609) maintains the junction of diode CR608 and resistor R631 at 2 volts. When a supervisory signal is received on any line, the corresponding selector flip-flop is triggered to the set condition, as previously explained (paragraph 4.10.2). The collector (Q609) of the triggered flip-flop goes to 12 volts, thus disconnecting gate diode CR608 and allowing any dial pulse information on that channel through pin 600-7 to appear across resistor R631.

The dial pulse information on the selected channel couples through diode CR609 to the base of transistor Q701 (figure 7), an emitter follower used to provide a low impedance source for the dial pulses. From this point, the dial pulses reach the DNI chassis through pin 700-10, J3 and the DNI interconnecting cable.

4.10.4 Audible Alarm, Card 700, Figure 7

The alarm consists basically of a flip-flop, blocking oscillator, and power amplifier, which drive a standard telephone earpiece TA-235.

A flip-flop, transistors Q702 and Q703, is used to gate the blocking oscillator transistor Q704 on and off. In the reset condition (alarm off), the collector of transistor Q703 is at 11.5 volts. From the junction of a voltage divider, resistors R715 and R716, diode CR702 biases the base of blocking oscillator transistor Q704 sufficiently positive so that it will not operate. When the flip-flop receives an input pulse from any card 400, pin 400-17 through 700-14, it is triggered to the SET condition. This trigger pulse appears upon operation of any LINE indicator lamp, as described in paragraph 4.10.1.3. In the SET condition, transistor Q703 collector is at 2.8 volts. The junction of resistors R715 and R716 is now sufficiently negative with respect to the base circuit of transistor Q704 that diode CR702 disconnects and the blocking oscillator operates. The output of the oscillator drives a power amplifier stage transistor Q705 which, in turn, drives the TA-235 transducer LS1 (figure 3).

The alarm is reset manually by operating switch S3 (figure 3) which pulls the collector of transistor Q702 toward zero volts through pin 700-15, and thus resets the gating flip-flop to its original condition.

4.10.5 Warning Tone Generator, Card 500, Figure 8

4.10.5.1 Final Circuit

The warning tone generator is used to generate a 200 msec burst of a 1,400 cps signal every 15 seconds. The timing is done by a free-running multivibrator whose two halves have unequal operating times. One half consists of transistors Q501 and Q502, and the other half consists of transistors Q503, Q504, and Q505. The half which generates the 15 second interval uses capacitors C501, C502, and resistor R501 as the time determining elements. Because of the necessarily high resistance of resistor R501, transistor Q501 is used as a current amplifier in the base circuit of transistor Q502. Q501 is a silicon transistor in order to minimize the effects of transistor leakage currents on the time constant of the RC network.

The half of the multivibrator which generates the 200 msec interval uses resistor R504 and capacitor C503 as the timing RC. Transistors Q504 and Q505 provide the current necessary to charge two parallel, 39 μf capacitors C501 and C502 during the short 200 msec interval during which transistor Q503 is saturated. The gating signal output is taken from the collector of transistor Q502 and feeds emitter follower transistor Q506, which is used to avoid timing errors due to loading. The gating signal consists of a 200 msec, +15 volt pulse every 15 seconds.

The 1,400 cycle signal is generated by a phase shift oscillator (transistors Q507 and Q515) which is gated on for 200 msec

every 15 seconds by the signal described in paragraph 4.10.5.1. During the 15 second interval, the oscillator does not have sufficient gain to operate because of degeneration due to its unbypassed emitter resistor R512. When the 200 msec gating pulse occurs, transistor Q506 emitter goes to +15 volts and allows 6 volt Zener diode CR502 to disconnect, thus causing transistor Q511 base current to be supplied through resistor R519. Transistor Q511 saturates, due to the supplied base current, and provides a current path to the +15 volt line for emitter bypass capacitor C507. The oscillator runs for 200 msec, at which time the gating pulse is removed and the emitter of transistor Q506 goes to near zero volts. The base of transistor Q511 follows to +6 volts because of the Zener diode voltage drop; transistor Q511 is turned off and no longer supports capacitor C507 current. The oscillator stops until another 200 msec gating signal appears.

Potentiometer R511 permits adjustment of the warning tone output level. Emitter followers Q508, Q509, and Q510 provide a low impedance warning tone signal source common to all channels through pin 500-23, and minimize loading of the phase shift oscillator.

Each time the 200 msec gate pulse appears, a monostable multivibrator (transistors Q512, Q513) is triggered by a positive pulse from transistor Q502 and operates for approximately 800 msec, as determined by capacitor C510 and resistor R522. This signal is inverted and made into a low impedance, negative going 800 msec

pulse by current amplifier transistor Q514 at pin 500-22. This pulse is used as a gating signal in card 600 to keep the warning tone burst from triggering the relay control (paragraph 4.10.8).

4.10.5.2 Modification of Engineering Test Model Design

The original design incorporated a single transistor , Q507, in the phase shift oscillator. Low temperature tests revealed that some production transistors 2N466 did not have sufficient gain to operate properly in the phase shift oscillator. The result was slow starting of the oscillator, which, in turn, abnormally shortened the 200 msec warning tone. The problem was solved by the addition of emitter follower Q515 in the oscillator feedback loop to assure sufficient current gain for proper operation of the oscillator under all conditions.

4.10.6 Compressor Amplifier, Card 300, Figure 9

4.10.6.1 Final Circuit

The primary of input transformer T301 bridges the monitored line (pins 300-3 and 300-4), and the secondary feeds amplifier transistor stage Q302. The transformer has a 6.7 to 1 impedance ratio. The secondary load is determined mainly by resistors R304 and R306 in parallel (1.4 k ohm) which, when reflected into the primary, presents approximately 9 k ohm load to the monitored line. The diodes CR301 and CR302 serve to protect transistor Q302 from high voltage transients that may appear on the line. One output from transistor Q302 feeds emitter follower transistor Q301 through

resistor R303. The output signal from transistor Q301 (pin 300-9) is used to drive the relay control circuits (paragraph 4.10.8).

The other output of transistor Q302 through capacitor C304 drives the gain controlling elements of the compressor, resistor R311, and diodes CR303 and CR304. Resistor R311, diodes CR303 and CR304 form a voltage divider whose resistance ratio is varied by changing the current (hence, the resistance) through the diode pair. The diode pair is in series to the dc control current and in parallel to the VF signal being controlled, because of bypass capacitors C305 and C306. The controlled signal is taken from the voltage divider network through capacitor C307 and fed into amplifier stage transistor Q303. The stage used to provide control current for diodes CR303 and CR304 takes its input signal from the collector load circuit of transistor Q303. The signal is amplified by transistor Q308, which drives transformer T303. The output of transformer T303 is rectified by diodes CR305 through CR308, and filtered by capacitors C317 and C318. The resulting dc is fed to diodes CR303 and CR304 as control current. It can be seen that if the VF signal at the collector of transistor Q303 increases, there is more current through the control diodes, lowering their resistance in the voltage divider so as to offset partially any change in signal level.

The compressed signal which appears at the collector of transistor Q303 is coupled to a power output stage transistor Q304 through potentiometer R319, which provides a manual gain

control. The output stage transistor Q304 and transformer T302 provide a nominal 600 ohm output signal to a front panel jack 19 (figure 3) for recording purposes. The system maintains a -15 dbm to +4 dbm amplifier output signal with a -30 dbm to +10 dbm input signal.

The R-L-C networks in the emitter circuit of transistor Q304 provide a sharp cutoff frequency response above 3,300 cps. Resistors R324 and R325 form an isolation pad whose output (pin 300-23) goes to an earphone LINE SELECTOR switch S4 (figure 3).

4.10.6.2 Modifications of Engineering Test Model Design

The first modification was made to improve the crosstalk attenuation between channels. The crosstalk attenuation was increased to more than 60 db by changing inductor L301, an open pie wound inductor, to a shielded toroid type. The spacing of the plug-in cards is necessarily small, and the open inductors produced too much inductive coupling between cards for satisfactory crosstalk attenuation.

The frequency response was originally within ±1 db, from 500 cps to 3,300 cps, with a 0 dbm input signal. At low signal levels, however, the response below 1 kc dropped too rapidly. In order to extend the low frequency response at low levels, the value of input coupling capacitor C301 was increased from 0.02 μf to 0.22 μf. The feedback control provided by transistor Q308 was made more uniform toward the low frequency limit of operation

by increasing the stage regeneration. This was accomplished by adjusting the values of resistors R327 and R328 to provide increased collector to base feedback.

The warning tone level which appears at the output of the compressor amplifier was reduced from approximately 0 dbm to -10 dbm. This was done by adding resistor R344 between the output of warning tone emitter followers Q306 and Q307 and the base circuit of the feedback amplifier Q308. This reduces the warning tone output level by introducing the warning tone signal to the compressor feedback circuits which cause the amplifier gain to be reduced during the 200 msec warning tone output.

4.10.7 Warning Tone Coupling, Card 300, Figure 9

The warning tone signal which appears at card 500, pin 23, is connected to all compressor amplifier cards 300, pin 10. Since the warning tone circuits are a source of crosstalk coupling, considerable isolation between warning tone coupling circuits is necessary. The isolation is provided by series resistor R342, amplifier transistor Q305, and complementary emitter follower transistors Q306 and Q307. Amplifier transistor Q305 also serves as a gate for the warning tone. The warning tone is disabled manually by operating the WARNING TONE switch S34 (figure 3) to OFF, thereby shorting the collector signal of Q305 to the +15 volt line.

Since it is undesirable to have a warning tone applied to a

monitored line when the line is not in use, the tone is gated off automatically by a signal from the supervisory circuits, card 400, pin 16. When a line is not in use, the signal at pin 400-16, and therefore a pin 300-6, is near zero volts. This pulls the emitter of transistor Q305 negative with respect to its base through resistor R341, Zener diode CR309. In this condition, transistor Q305 is turned off and cannot pass the warning tone signal. When the supervisory signal (pin 400-16) is at 10 volts (line in use), the 6 volt Zener diode CR309 cannot conduct, and the amplifier transistor Q305 operates normally and passes the warning tone.

4.10.8 Relay Control, Card 600, Figure 6

A relay controlled by line VF signals is ued to provide automatic control of a recorder. The relay circuits operate when a line signal exceeding -30 dbm is detected. Once operated, the relay holds for approximately 30 seconds after removal of the line signal.

The control input signal is derived from the compressor amplifier card 300, pin 9. The input signal at pin 600-2 connects to potentiometer R601. R601 is a gain control potentiometer set to operate the relay with a -30 dbm line signal. The signal from potentiometer R601 is amplified by transistor Q601 and operates a trigger circuit, transistors Q602 and Q603. The trigger circuit provides a definite operating point with minimum hysteresis, and also provides an output signal of constant amplitude regardless

of input level once the triggering point is exceeded.

The relay holding interval of 30 seconds is determined by resistor R612 and capacitor C604 in the input of another trigger circuit, transistors Q604, Q605, and Q606. Q607 is a relay driver transistor. When an input signal exceeding -30 dbm is received, trigger circuit transistors Q602 and Q603 operate, and the emitter of transistor Q603 switches toward 15 volts. Capacitor C604 is rapidly charged through resistor R611 and diode CR601. When capacitor C604 starts charging, resistor R612 no longer supports base current in transistor Q604, and the trigger circuit changes state. In this condition, base current for the relay driver Q607 is supplied through transistor Q606 to energize the relay K15 (figure 3). Each time an input signal exceeds -30 dbm, capacitor C604 receives a full charge. If no input signal is received for approximately 30 seconds, capacitor C604 discharges to 5 volts and the trigger circuit returns to its original state, de-energizing the relay. The relay K15 (figure 3) contacts 4 and 6 are wired in series with RECORDER CONTROL switch S39 (figure 3) to front panel jack J19 (figure 3). Switch S39 is used to disable the automatic recorder control function, if desired. The relay contact lines are filtered by filter FL18 to minimize radio interference.

During ringdown operation, the relay control circuits are used to operate the LINE indicator lamp simultaneously with relay operation. This is done by a connection from the collector of transistor Q607 through resistor R620, diode CR603, and INPUT

MODE switch S64 (figure 3), to the base of LINE indicator lamp drive transistor Q412 (figure 5).

A gating system is provided to keep the warning tone, fed to a monitored line at a -10 dbm level, from operating the relay control circuit. Since the relay holding interval is longer than the repetition rate of the warning tone, the supervisory circuit could never gate off the warning tone after other line signals had ceased. An 800 msec negative going pulse (pin 600-4) that occurs with each warning tone burst is connected through diode CR610 to the collector of trigger circuit transistor Q602. This pulse forces the collector to remain in its no signal condition during each warning tone burst. This 800 msec signal is derived from card 500 and is generated as described in paragraph 4.10.5.

4.10.9 Power Supply, Figure 10

The basic power requirement for the Monitor Unit is unregulated 24 v dc at 1.35 amperes. This can be supplied either by batteries, a vehicular supply, or a built in transformer-rectifier power supply for 115 v ac or 230 v ac operation.

During 24 v dc operation, the voltage connects to the Monitor Set through pins D and C (GRD) of AC-DC POWER jack J2. Filter assembly FL-3 reduces conducted radio interference. Switch S1 is the power on-off switch, and diode CR3 is used to protect the Monitor Unit circuits from damage due to improper battery polarity connection. The 24 v line is fused by F3.

During ac line operation, the power line connects to pins A and B of jack J2. Filters FL1 and FL2 provide radio interference suppression. The 115 v ac line is fused by F1. Switch S1 is the power on-off switch. Either 115 v ac or 230 v ac operation is selected by switch S2, which connects the split primary windings of transformer T1 in parallel for 115 v ac, and in series for 230 v ac operation. F2 fuses the line during 230 v ac operation. The 24 v dc is derived from a full wave rectifier system using the center tapped secondary of transformer T1 and rectifiers CR1 and CR2. Filtering is done by capacitor C1.

A regulated 15 v dc supply is used for most of the Monitor Set circuits. A series regulator transistor Q1 receives unregulated 24 v dc and regulates to 15 v dc. Driver transistor Q2 and the regulator amplifier circuits on card 800 (paragraph 4.10.10) furnish the feedback signal to transistor Q1.

4.10.10 Regulator Amplifier, Card 800, Figure 11

The regulator differential amplifier transistors Q803 and Q802 compare a portion of the regulated 15 volts at potentiometer R808 with a reference voltage provided by Zener diode CR803. Any resultant error signal is amplified by transistor Q802, which controls the current in transistor Q1 so as to correct the error. Potentiometer R808 allows the adjustment of the supply to 15 volts.

4.10.11 Earphone Amplifier, Card 800, Figure 11

The earphone amplifier consists of amplifier transistor Q804 and output transformer T801, whose 600 ohm secondary is connected to a front panel earphone jack J4 (figure 3). The input signal for transistor Q804 comes from a volume control potentiometer R1 (figure 3). The input to the volume control comes from selector switch S4 (figure 3), which is used to select one of the 15 channels to be monitored with earphones (paragraph 4.10.6.1).

4.10.12 Counter Driver, Card 400, DNI, Figure 12

The dial pulse information used to operate the DNI comes from the emitter of transistor Q701 through jack J3-D (Monitor Unit chassis), the DNI interconnecting cable, J1-D (DNI chassis) to card 400 DNI, pin 3. Integrator resistor R401 and capacitor C401 serve to remove any transients that may be picked up be the cable. The dial pulses are reshaped by trigger circuit transistors Q401 and Q402, which in turn feed an emitter follower transistor Q403 used to furnish drive current for the counters and a delay circuit. The counter drive signal comes from the emitter of transistor Q403 through capacitor C404 and appears at pin 400-19. Another output from transistor Q403 operates a timing circuit which, in conjunction with card 300 (DNI), routes the dial pulses to the proper counter, i. e., digit one to the first counter, digit two to the second counter, etc.

During the off-hook condition before a digit is dialed, the

emitter of transistor Q403 is near +15 volts. This causes the base of transistor Q404 to be positive with respect to its emitter. Transistor Q404 is cut off, and its collector goes toward zero volts. When the first in a series of dial pulses appears at transistor Q403, the voltage at the emitter goes negative. This charges capacitor C402 through resistor R407 and diode CR401, and furnishes base current for transistor Q404, changing the state of the trigger circuit transistors Q404 and Q405. The emitter of transistor Q405 now is near 15 volts. Dial pulsing occurs at a repetition interval of approximately 100 msec. The discharge time constant of capacitor C402 (in conjunction with resistors R408 and R409, and the base junction of transistor Q404) is such that the trigger circuit stays in the same condition as long as pulses continue to recharge capacitor C402 every 100 msec. At the end of a dialed digit, a break in pulses longer than 200 to 300 msec occurs. Capacitor C402 discharges sufficiently during this time to allow trigger circuit transistors Q404 and Q405 to return to their original state, producing a negative going transition at the output (pin 400-18).

4.10.13 Digit Counter, Card 300, DNI, Figure 13

The negative pulses generated by card 400 (DNI) at the end of each digit dialed are counted by a three stage binary counter whose outputs are diode matrixed so as to provide a gating signal on one of seven lines. The first digit causes only pin 300-1 (DNI)

to be positive, the second digit causes only pin 300-2 (DNI) to be positive, etc. The DNI is made to record seven digits. Upon receipt of the seventh digit signal from card 400 DNI, an output from the diode matrix disables gate R309 and CR325, which prevents further signals from entering the digit counter until the circuits are reset manually.

4.10.14 Counter, Card 100, DNI, Figure 14

There are seven identical four stage binary counters which count and store dialed numbers under the control of card 300 (DNI). The counter for the first digit is gated by a positive signal at pin 100-20 which comes from pin 300-1 (paragraph 4.10.13). The counter for the second digit is gated by a positive signal at pin 100-20 which comes from pin 300-2, etc. Since the cathode of gate diode CR101 is at +15 volts, the positive gate voltage at pin 100-20 of counter number one allows the diode to pass dial pulses which come from pin 400-19 through pin 100-10. When counter number two is to receive dial pulses, the gating signal at pin 100-20 of counter number one is near ground, causing diode CR101 to be reverse biased so as not to pass dial pulses. The dialed numbers counted and stored by the counters are in binary form and must be converted to decimal form to be displayed.

4.10.15 Matrix and Indicator Tube Drivers, Card 200, DNI, Figure 15

A diode matrix (diodes CR201 through CR235) converts the stored dialed numbers from binary to decimal form. There are seven matrix cards, corresponding to the seven counter cards. There are eight input lines, from the collectors of the four counter flip-flops, to each matrix card. There are ten output lines, ea ch of which feeds an indicator tube driver transistor (Q201 through Q210). For example, if the numeral one is to be displayed, the matrix output line connected to resistor R201 and transistor Q201 base is released by diodes CR201, CR202, CR203, and CR204. Resistor R201 furnishes base current, causing transistor Q201 to conduct. The collector of transistor Q201 is connected to indicator tube cathode number one (numeral 1), supplying operating current to the Nixie indicator tube. The driver transistors connected to the off indicator cathodes are biased off by the matrix, and the collector voltage rises to more than 60 volts. This leaves insufficient voltage between indicator anode and cathodes to make the off cathodes glow.

4.10.16 DNI Reset, Card 400, DNI, Figure 12

The DNI recorded number and Monitor Unit line selector circuits are reset by operating RESET switch S2 (figure 16). One set of contacts on switch S2 resets the Monitor Unit line selector flip-flops directly. The reset line connects to the proper collector of each flip-flop through isolating diodes (paragraph 4.10.2).

Switch S2 applies +15 v dc to the reset line, which connects through DNI jack J1-E, the DNI interconnecting cable, and Monitor Unit jack J3-E to card 600-11.

The other set of contacts operates an 350 msec single-shot circuit on card 400 (DNI). The single-shot, transistors Q406 and Q407, provides a reset pulse of a fixed length of time (350 msec) each time the RESET switch S2 is operated. This is done to assure proper resetting of all circuits in the event that the RESET switch is operated and released too rapidly to provide a reliable reset pulse.

The reset pulse is distributed to all cards 100 (DNI) and card 300 (DNI) through pins 400-10, 100-5, and 300-16. The reset pulse then is fed through OR gate diodes on each card to one collector of each flip-flop on all cards 100 (DNI) and card 300 (DNI). Occurrence of the reset pulse returns the flip-flop collectors to their original condition, where all indicator tubes are blank and the counters are ready to receive another dialed number.

4.10.17 Power Supply, DNI Chassis, Figure 16

The DNI receives 24 v dc and regulated 15 v dc from the Monitor Unit through the DNI interconnecting cable and pins A and B of the POWER connector J1. Switch S1 is the power switch. Indicator I1 indicates power on. The 24 v dc supplies power to the POWER indicator and the dc to dc converter. The regulated 15 v dc powers all other low voltage circuits in the DNI.

The number indicator tubes I2 through I18 required a 180 v dc power supply. Since the AN/GTA-13 must be able to operate on a 24 volt battery supply, the indicator tube voltage is generated by a transistor dc to dc converter, transistors Q1 and Q2. The supply is a standard oscillator type utilizing transformer T1 designed for converter use. The oscillator runs at a nominal 1 kc rate. The secondary ac voltage is rectified by bridge circuit rectifiers CR1, CR2, CR3, and CR4. The oscillator power transistors Q1 and Q2 are protected against high voltage transients by Zener diodes CR6 and CR7, which limit the collector voltage peaks to 68 volts.

The rectified output voltage is filtered by capacitor C1. Series resistors R4, R5, and shunt regulator Zener diode CR5 regulate the output voltage at 180 volts during supply input voltage and output load variation. Filters FL1 and FL2 minimize any radio interference caused by the power supply oscillator.

4.11 Mechanical Design

4.11.1 General

Originally, the AN/GTA-13 was to be one unit containing both the Monitor Unit and Dialed Number Indicator circuits. In December 1961, SCL-4284 was amended to make the Dialed Number Indicator a separate unit. The waterproofing requirement also was modified. The rain tests while operating were deleted and replaced by an immersion test of the equipment in its transit case.

The Monitor Unit and Dialed Number Indicator are provided with similar transit cases and mounting systems (figures 17 and 18). When closed, the transit cases are air tight and provide mechanical protection and waterproofing for the equipment. Both front and rear transit case lids are removable to allow the equipment to be operated while in the case. Cable storage is provided in the cases. The two units are easily removable from the transit case racks and can be mounted directly into any standard rack, making use of the same captive panel screws used for transit case mounting.

4.11.2 Monitor Unit, Engineering Test Model Mechanical Design

The mechanical layout of the engineering test models of the Monitor Unit included all fifteen channels required on the service test models. Only five channels were completed electrically, as specified in SCL-4284. The estimated weight and weight distribution of the other ten channels were simulated by brass weights.

The Monitor Unit was designed for standard rack mounting and has a front panel nineteen inches by five and one-quarter inches high. The over-all depth of the unit is 18-3/4 inches. The weight is 38 pounds.

The top and bottom covers are quickly removable since these are held in place by quarter turn fasteners. Figure 19 is a view of the Monitor Unit with the top cover removed.

The printed circuit cards are mounted in three compartment, with provision for sixteen cards in each compartment. The rear

card compartment contains the warning tone generator, card 500, and the compressor amplifier, cards 300. Although electrically the same, there are two cards 300, designated 300A and 300B. The physical layout of the components on these two types is different in order to reduce coupling between the transformers of adjacent channels. The cards are keyed so that they cannot be plugged into the wrong connector.

The center card compartment contains the alarm card 700 and the dc recovery cards 400. The front card compartment contains the regulator amplifier card 800 and the relay control cards 600.

The last compartment forward contains the plug in recorder control relays. The relay radio interference filters are enclosed completely in a compartment and are the bulkhead feedthrough type for optimum RFI reduction.

The INPUT MODE switches and associated components are mounted at the rear of the unit. This compartment is accessible by removing the rear panel.

The power supply compartment is shown at the left of figure 19. The regulator power transistor and rectifier heat sinks are mounted directly against the side panel in order to conduct as much heat as possible into the outer surfaces of the case.

Rugged handles are provided on the front panel for ease in handling and for protection of the switches and indicators during bench handling, etc. The side panels are extended to the rear and formed so as to provide protection for the rear mounted components.

These side panel extensions are drilled and reinforced to take three-eighth inch stainless steel pins which are built into the transit case racks. The Monitor Unit slides into the transit case rack and is supported and held by the pins in the rear and the panel screws in the front. The transit case rack is shock mounted within the transit case by means of four Series 1000 Barry shock mounts.

A plywood panel fitted with suitable web straps is made to slide into the Monitor Unit transit case to provide for cable storage. This panel can be seen above the Monitor Unit in figure 17.

The transit case, over-all, is 24 inches wide, 12 inches high, and 24 inches deep.

4.11.3 Monitor Unit, Service Test Model Mechanical Design

Few changes were necessary in the original design of the engineering test model. The only area requiring a change was the transit case mounting system for the Monitor Unit and the cable panel.

During the four-foot drop test at USAERDL, the stainless steel threaded inserts into which the four Monitor Unit panel screws mate, were broken. These inserts are pressed into the aluminum transit case rack. They provide the sole support of the unit in a front drop.

When the engineering test model was returned to NSL, these inserts were replaced by a 1/4 inch thick steel bar with tapped holes into which redesigned panel screws fit.

The unit was dropped four feet onto its front surface, rear surface, and both side surfaces, with the modified fittings in place. The Monitor Unit remained in place during the test. The redesigned fittings were incorporated into the service test model.

There was some deformation of the chassis and panel caused by the drop test. In order to provide more bracing, the bottom cover of the service test model was screwed tightly to the chassis and front panel instead of being attached with quick release fasteners.

During the drop test, several transit case rivet heads were broken off. These were changed from 1/8 inch to 3/16 inch diameter rivets.

During the bounce test of the engineering test model, the cable panel stops on the transit case slides were broken off. The cable panel slide arrangement in the service test model was changed to avoid this problem.

The Monitor Unit transit case was reduced to the following over-all dimensions: a width of 23-1/4 inches, a height of 12 inches, and a depth of 23-1/4 inches. The weight of the Monitor Unit, transit case, and cables is 100 pounds.

4.11.4 Dialed Number Indicator, Engineering Test Model, Mechanical Design

The Dialed Number Indicator was designed for rack mounting. Its front panel is 19 inches wide by 3-1/2 inches high. The over-all dept of the DNI is 11-7/8 inches, and its weight is 12 pounds. As shown in figure 20, there are three basic compartments. Removal of an L-shaped top cover exposes two of the compartments. The number indicator tube mount and the printed circuit connector interwiring are accessible directly to the rear of the front panel. The power supply compartment is isolated from all other circuits, and the only two wires entering the compartment do so through feed-through radio interference filters.

The plug-in circuit cards are reached by removing the rear cover. There are sixteen printed circuit cards in the DNI.

The transit case mounting provisions are the same as for the Monitor Unit. The over-all dimensions of the transit case are: width, 24 inches; height, 8-1/4 inches; and depth, 18-1/2 inches.

4.11.5 Dialed Number Indicator, Service Test Model Mechanical Design

The same changes in panel mounting system and rivet size discussed in paragraph 4.11.3 were made to the DNI.

The size of the DNI transit case was reduced to the following over-all dimensions: width, 23-1/4 inches; height, 7-1/2 inches; and depth, 16-1/2 inches. The total weight of the DNI and transit case is 50 pounds.

4.11.6 Printed Circuit Cards

The majority of the electronic components are mounted on repairable, plug in, printed circuit cards made of glass epoxy material with etched copper wiring on one side only. The cards have Elco staked-in connector pins which mate into Elco molded connectors. Consideration was given to using etched wiring mother boards with staked-in connector pins, but the method is believed to be impractical for this device. Since a great many wires leave the board and go to the chassis mounted switches, connectors, and indicators, not much can be gained by using a mother board. It also is difficult to produce a mother board with the close tolerances and many pins necessary. The exposed connector pins also are very vulnerable to damage and are almost impossible to replace.

The assembled cards are epoxy dipped to provide moisture proofing and mechanical protection for the components. The cards fit into guides built into the connectors, and are keyed so they cannot be plugged into the wrong connectors inadvertently.

The cards are positioned and held in place at the top by easily removable hold downs. The long DNI cards are held along the edges by card guide slots.

Extender cards are provided to make the plug in circuit cards more accessible for servicing. The extender card is installed between a card to be tested and its chassis mounted connector. This raises the card above the others so that any connection on the card can be reached with a test probe.

A card puller is supplied with the Monitor Unit to assist in the removal of cards. When not in use, the card puller is stored in the power supply compartment.

4.12 Electrical Performance Data

4.12.1 General

After completion, the AN/GTA-13 service test models underwent testing at simultaneous extremes of temperature and supply voltage variations. The following paragraphs describe the test methods used and contain typical data obtained during performance testing.

The test data also applies to the engineering test models in all areas except the compressor amplifier, card 300. Frequency response, crosstalk, and warning tone level characteristics were changed in the service test models. The applicable data are given for both models of the equipment.

4.12.2 DC Recovery

The dc recovery circuits were tested using a test assembly, such as the one shown in figure 21, to simulate the dc conditions of a common battery telephone system.

4.12.2.1 INPUT MODE SWITCH Position 1 (Ringdown Line)

This mode was tested in conjunction with recorder control, (see paragraph 4.12.5). In this mode of operation, dc recovery is inoperative.

4.12.2.2 INPUT MODE SWITCH Position 2 (24 v Line)

Telephone line voltage of 12 volts (measured at monitor input) turned on the supervisory lamp, simulating off-hook condition. Line voltage of 19 volts turned off supervisory lamp, simulating on-hook condition.

4.12.2.3 INPUT MODE SWITCH Position 3 (48 v Line)

Line voltage of 24 volts turned on the supervisory lamp (off-hook condition). Line voltage of 38 volts turned off the supervisory lamp (on-hook condition).

4.12.2.4 INPUT MODE SWITCH Position 4 (60 v Line)

Line voltage of 30 volts turned on the supervisory lamp (off-hook condition). Line voltage of 48 volts turned off the supervisory lamp (on-hook condition).

4.12.2.5 Limits of Operation

The voltages given for the three modes of operation are the design limits, and actual lamp switching occurred between these values when there existed any combination of ambient temperature and power line voltage specified in SCL-4284.

4.12.3 Dialed Number Indicator

The Dialed Number Indicator was tested in conjunction with the related dc recovery circuits and operated properly under the same extremes of temperature and voltage.

4.12.4 Recorder Control

Relay closure was tested by connecting an ohmmeter between the red and green wires of the recorder control output cable. An audio signal generator, Hewlett Packard 650A, having a 600 ohm calibrated variable output, was used to supply the test signal to the channel being tested. The input signal was increased slowly from -40 dbm or less until the recorder control relay contacts closed. The level of operation was a nominal -30 dbm. The relay contacts remained closed for approximately 30 seconds after the input signal was removed or was reduced to less than -33 dbm.

While subjected to any combination of specified ambient temperature and power line voltage, the operating level of the control relay was between -26 dbm and -33 dbm, and the holding time was between 26 and 35 seconds.

4.12.5 Supervisory Signal (Ringdown Mode)

During the ringdown mode of operation, the recorder control circuitry is utilized in lieu of dc line signals to operate the supervisory lamp. This function was tested using the same input test signal as in paragraph 4.12.4. The INPUT MODE SWITCH of the channel being tested was set at position 1, ringdown mode. The supervisory LINE indicator lamp came on simultaneously with relay operation and remained on for the nominal 30 second relay holding interval.

4.12.6 Warning Tone

4.12.6.1 Engineering Test Model

This signal was tested with a 600 ohm load across the Monitor Unit line input pair corresponding to the channel under test. An oscilloscope was used in conjunction with a comparison signal generator to measure the warning tone level and timing. The warning tone level applied to the monitored line was set at -10 to -14 dbm with a 600 ohm load. The warning tone level at the Monitor Unit output was approximately 0 dbm.

Typcial warning tone timing under any combination of specified ambient temperature and power line voltage was as follows:

1) interval -- 12.2 seconds to 15.5 seconds,
2) on time -- 175 msec to 200 msec, and
3) tone frequency -- 1,420 cps to 1,500 cps.

This is within the limits specified in FCC Order Docket No. 6787, which specifies:

1) interval -- 12 seconds to 18 seconds,
2) on time -- 160 msec to 240 msec, and
3) tone frequency -- 1,260 cps to 1,540 cps.

4.12.6.2 Service Test Model

A modification (paragraph 4.10.6.2) was made to the compressor amplifier circuitry which reduced the warning tone level at the output to approximately -9 to -10 dbm, or about the same level as that applied to the monitored line. In all other

respects, the warning tone performance data was essentially the same as obtained from the engineering test model, paragraph 4.12.6.1.

4.12.7 Compressor Amplifier

The compressor amplifier was tested using an audio signal generator, Hewlett-Packard 650A, having a 600 ohm calibrated variable output. An audio voltmeter, Ballantine 310A, was used to measure output levels. All LINE INPUT and monitor OUTPUT lines were terminated in 600 ohms while under test.

4.12.7.1 Compression

The compressor amplifier was designed to maintain its output level within -15 dbm to +4 dbm with a line input signal level of from -30 dbm to +10 dbm. An internal level adjustment was provided and was set to give a nominal 0 dbm output with a 0 dbm line input signal at 1 kc. Typical 1 kc compression figures were as follows:

Input	Output
+10 dbm	+3 dbm
0 dbm	0 dbm
-10 dbm	-2 dbm
-20 dbm	-6 dbm
-30 dbm	-15 dbm

4.12.7.2 Frequency Response, Engineering Test Model

The low frequency response of the original amplifier fell too rapidly at low input levels such as -20 to -30 dbm. The amplifier was modified to overcome the problem as explained in paragraph 4.10.6.2.

4.12.7.3 Frequency Response, Service Test Model

The frequency response characteristic of the final amplifier design met the specification (±1 db; 500 cps to 3,300 cps) at all useable signal levels. Figure 22 is a graph showing typical frequency response curves with input levels of 0 dbm and -30 dbm.

4.12.8 Crosstalk Coupling Attenuation, Engineering Test Model

Crosstalk coupling attenuation was determined by providing a 0 dbm signal to the input of a given channel and measuring the signal level which appeared at the output of an adjacent channel. This test was made with the WARNING TONE switches ON and the INPUT MODE switch in position 2, 3, or 4 (supervisory lamp on), which makes the warning tone coupling circuits operative. Therefore, any crosstalk coupling introduced by these circuits was included in the measurement. Typical crosstalk coupling attenuation was between 50 and 60 dbm over the frequency range of 300 to 3,500 cps. These measurements were made using a Ballantine 310A voltmeter in conjunction with two Spencer-Kennedy variable filters set to provide a relatively narrow bandpass.

4.12.9 Crosstalk Coupling Attenuation, Service Test Model

A modification was made in the final amplifier to increase the crosstalk attenuation (paragraph 4.10.6.2). The coupling attenuation between the final amplifiers was greater than 60 db over the frequency range of 300 to 3,500 cps.

4.12.10 Harmonic Distortion

Typical harmonic distortion figures, measured with a Hewlett-Packard 650A signal generator and a Hewlett-Packard harmonic distortion analyzer, were as follows:

Total Harmonic Distortion

Frequency (cps)	Input Level 0 dbm	-10 dbm	-20 dbm	-30 dbm
300	2.0%	1.5%	Less than 1.0%	Less than 1.0%
500	1.5%	0.5%	Less than 0.5%	Less than 0.5%
1000	1.0%	0.5%	Less than 0.5%	Less than 0.5%
2000	0.4%	0.5%	Less than 0.5%	Less than 0.5%
3000	0.3%	0.2%	Less than 0.2%	Less than 0.2%
3300	0.2%	0.2%	Less than 0.2%	Less than 0.2%

4.12.11 Noise Level

National Scientific Laboratories did not have a Transmission Measuring Test set TS-559/FT or the equivalent; however, Mr. Faughnan of USAERDL brought a TS-559/FT with him on one of

his visits to National Scientific Laboratories. A noise measurement was made on a compressor amplifier card that was similar to the final design which appears in the engineering test model. In that test, the noise level proved to be 15 dba or less. The final service test model amplifier was tested at a later date with similar results.

4.12.12 Line Loading

The loading presented to a telephone line by the compressor amplifier was determined by measuring the signal loss which occurred through a 600 ohm resistor in series with the Monitor Unit input line. Typical loss figures were:

Frequency (cps)	(XE-1) Loss (db)	(XE-2) Loss (db)
300	0.3	1.0
500	0.5	1.0
1000	0.8	0.9
2000	0.8	0.9
3000	0.8	0.9
3500	0.9	0.9

4.12.13 Longitudinal Balance

Longitudinal balance was measured using the test method shown in figure 23. The figure given is the difference in db between output 1 and output 2. The longitudinal balance was typically as follows:

Frequency (cps)	(XE-1) Balance (db)	(XE-2) Balance (db)
300	-54	-49
500	-56	-48
1000	-55	-48
2000	-49	-47
3000	-44	-45
3500	-44	-44

4.12.14 Regulated 15 Volt Power Supply

Typical performance of the 15 volt dc regulated power supply was as follows:

Ambient Temperature	Voltage	Peak-to-Peak Ripple
-25° F	14.5	10 mv
68° F	15.0	5 mv
125° F	15.4	5 mv

There was negligible voltage variation due to power line voltage variation of ±10%.

4.12.15 Unregulated 24 Volt Power Supply

The 24 volt power supply voltage varies directly with power line or battery supply voltage. Typical ripple voltages when a 60 cycle supply was used are as follows:

Ambient Temperature	Peak-to-Peak Ripple
-25° F	2.0 volts
68° F	1.2 volts
125° F	1.5 volts

The AN/GTA-13 performed satisfactorily with a 60 cycle supply variation of ±10% and a 24 battery supply variation of -10%, +25%.

4.12.16 Radio Interference Measurements

4.12.16.1 Test Setup and Equipment Used

Interference measurements were made in a shielded enclosure located at National Scientific Laboratories. The general test setup and procedures specified in MIL-I-11748 were used. However, the particular measuring instruments called for in the specification were not available. The basic measuring instrument used was the same as specified but the accessory antenna systems differed.

The basic measuring instrument was an Empire Devices NF-105 receiver with appropriate plug-in RF heads to cover the frequency range from 150 kc to 1000 Mc. A 41 inch whip antenna was used in making measurements from 150 kc to 30 Mc. Empire Devices dipole antennas were used for the range 30 Mc to 1000 Mc.

Conducted measurements were made using standard power line stabilization networks to feed the 50 ohm input of the NF-105. Calibration was accomplished using the impulse noise calibrator supplied as an accessory to the NF-105.

While testing for recorder control relay interference, an input signal to the Monitor Unit was provided by a TA-43 telephone. To speed up measurements, the 30 second relay holding interval was shortened to about one second by temporarily reducing the value of R612 on card 600. A recorder remote control circuit was simulated by supplying 50 ma at 120 v dc to the Monitor Unit relay contacts.

A test assembly (figure 21) was used to simulate a dial telephone line for operation of the Dialed Number Indicator.

4.12.16.2 Radiated Interference

The only radiated interference detected was due to recorder control relay contacts and occurred in the areas of 8 Mc and 50 Mc (figure 24). The limit specified in MIL-I-11748B is given in microvolts per megacycle for a specific antenna. Since that antenna was not available, a direct comparison between the level shown in figure 24 and the limit given in MIL-I-11748B cannot be made.

4.12.16.3 Conducted Interference

Conducted interference measurements were made using both the 60 cycle ac and +24 v dc battery power sources. The graph in figure 25 is a plot of the maximum levels obtained with either power source. The types of interference measured were as follows:

a. power supply rectifier noise up to about 500 kc,

b. relay contact noise above 500 kc, and

c. in the area of 5 to 15 Mc, some Nixie indicator tube hash was detected but was 10 to 15 db below the relay contact noise.

Conducted interference levels can be compared directly with the MIL-I-11748 limit, which also is plotted in figure 25.

AN/GTA-13 conducted interference from any source is well within the specified limit.

No change was made in the equipment which would tend to increase the interference; however, spot checks were made on the service test model for comparison with the results of engineering test model measurements. The checks confirmed that the interference levels of the two models were essentially the same.

4.12.16.4 Chopper Signal Level

Although not required under MIL-I-11748, a measurement was made of the 8 kc dc recovery chopper signal which appears on a monitored line. A Stoddard NM-40 low frequency receiver was used. The following conducted levels were measured at 8.6 kc.

600 ohm line termination -- 0.3 μv

10 k ohm line termination -- 20.0 μv

10 k ohm line to ground -- 50.0 μv

No radiated chopper signal could be detected with the electrostatic probe antenna located one foot from the simulated telephone line.

4.12.16.5 Power Line Conducted Susceptibility

Power line conducted susceptibility tests were made in accordance with MIL-I-11748B, and no undesirable response or malfunctioning was produced.

5. OVER-ALL CONCLUSIONS

The first equipment resulting from this contract has proved to be a versatile and reliable device which will meet the need for a monitoring set. All the operational requirements have been met, and simplicity of operation has been retained.

The AN/GTA-13 should prove to be as reliable as predicted, because the factors which were found to have the greatest effect on reliability were given first consideration throughout design and construction.

The majority of the electronic circuits are on pluckout cards which offer a distinct advantage when servicing becomes necessary. Most malfunctions can be corrected at the operating site by lower echelon personnel with minimum down time for the equipment.

Semiconductor devices were used (except for the number indicator tubes) to good advantage with regard to reliability, power requirements, size, and weight. It is concluded that the AN/GTA-13 could be made smaller only if an entirely different design approach is used. The alternative methods available either are extremely costly or preclude the repair of pluckout modules. The over-all power drain of roughly two watts per channel is quite low in view of the many functions provided by each channel.

No special components or construction techniques required during development of the equipment would present any particular problems in quantity production.

6. RECOMMENDATIONS

Specification SCL-4284 called for a frequency response of ±1 db between 500 and 3300 cps. In some instances this may prove to be a disadvantage, particularly on poor circuits with considerable noise and crosstalk. The primary disadvantage, aside from operator irritation, is the possibility of recorder control operation on unwanted signals. It may be advisable to consider tailoring the response to roughly correspond to that through a telephone set.

The requirement for the four-foot drop test resulted in a transit case system which increased the volume and weight by 100 percent over that of the basic rack mounted equipment. If normal usage of the equipment does not make this requirement imperative, a considerable saving in size, weight, and cost could be realized.

Because of the large number of cables used with the equipment, it may be desirable to provide a separate container, such as a canvas bag, for the cables rather than to provide space for them within the transit case.

If the AN/GTA-13 is to be used to a limited degree on 60 volt foreign systems, it may be practical to delete the 60 volt INPUT MODE SWITCH position and associated circuitry. In practice, the 48 volt position would permit operation on 60 volt systems on all but subscriber lines approaching the limiting length for proper central office operation.

7. IDENTIFICATION OF KEY TECHNICAL PERSONNEL

7.1 Man-Hour Contribution of Key Personnel

Name	Position	Man-Hours
Stimson, F. E.	Project Engineer	3178
Halchak, J.	Staff Engineer	2456
Mondin, P. J.	Senior Engineer	656
Adams, R. L.	Junior Engineer	855
Stalder, E. W.	Physicist	671
Callender, W. L.	Mechanical Engineer	314

In addition to the above listed engineering personnel, Messrs. W. C. Green, D. K. Martin, and Wendell E. Lepper have contributed to the success of AN/GTA-13 development by providing advisory services as required.

7.2 Resumes

Appendix I of this report contains resumes of the professional experiences of each of the above named engineers.

TABLE I

Controls, Indicators, and Connectors: Monitor Unit.

Control, Indicator, or Connector	Function
LINE Indicator Lamp (15).	Indicates line in use. Indicates line use directly in common battery systems and is voice operated by a signal greater than -30 dbm on ring-down lines. After operation from a ringdown line, the lamp holds for approximately 30 seconds after the line signal ceases.
DIALED NUMBER INDICATOR Switch (15).	Allows dial signaling to be recorded on the Dialed Number Indicator (DNI). If two or more of these switches are in the ON position, the first dial sequence received on the applicable line will be recorded on the Dialed Number Indicator, and dial information on any other line will be excluded until the RESET button is operated.
WARNING TONE-OFF Switch (15).	Applies the standard 1400 cps warning tone on the line being monitored, as required.

TABLE I (Cont.)

Control, Indicator, or Connector	Function
RECORDER CONTROL-OFF Switch (15).	Allows the automatic recorder control function to be disabled.
RECORDER CONTROL Connector (15).	Provides voice frequency signal output to a recorder and relay contacts which automatically operate a recorder when a VF signal greater than -30 dbm appears on a monitored line.
LINE SELECTOR Switch.	A 15-position rotary switch which allows the operator to monitor any of the fifteen channels.
VOLUME Control.	Adjusts earphone volume.
EARPHONE Connector.	A standard audio connector for earphone signal output.
ALARM RESET-OFF Switch.	When the switch is in the center position, an audible alarm is sounded when a call is initiated on any channel. The alarm may be reset by operating the switch upward and releasing it to its spring loaded position.

TABLE I (Cont.)

Control, Indicator, or Connector	Function
	The alarm may be disabled by positioning the switch to the OFF position.
POWER Indicator.	Indicates power ON.
POWER ON-OFF Switch.	Applies power to the equipment, either ac or dc, whichever is connected.
INPUT MODE SWITCHES (15).	Selects the mode of operation of the Monitor Unit according to the type of line being monitored. Position 1 - Ringdown Line Position 3 - 24 v Line Position 3 - 48 v Line Position 4 - 60 v Line
LINE INPUT Connector.	Connects the fifteen monitor inputs to a switchboard main frame.
AC-DC POWER Connector.	Connects either 115-230 v ac or 24 v dc to the AN/GTA-13.
DNI Connector.	Interconnects the Monitor Unit and the DNI.

TABLE I (Cont.)

Control, Indicator, or Connector	Function
115 V - 230 V Switch.	Converts AN/GTA-13 to either 115 v ac or 230 v ac operation.
115 V AC Fuse, 1/2 Amp.	Fuses the 115 v ac power line.
230 V AC Fuse, 1/4 Amp.	Fuses the 230 v ac power line.
24 V DC Fuse, 1-1/2 Amp.	Fuses the 24 v dc supply line.

TABLE II

Controls, Indicators, and Connector: DNI

Control, Indicator, or Connector	Function
POWER, Indicator.	Indicates power ON.
POWER, ON-OFF Switch.	Applies power to the equipment.
RESET Pushbutton Switch.	Removes recorded number from indicators.
DIALED NUMBER, Indicator Tubes (7).	Provides visual display of seven digit telephone number.
POWER Connector.	Interconnects the Monitor Unit and the DNI.

APPENDIX I

The following pages are resumes of the professional experience of:

Stimson, Francis E.

Halchak, Joseph

Mondin, P. J.

Adams, Robert L.

Stalder, Ernest W.

Callender, William L.

FRANCIS E. STIMSON

Mr. Stimson is a Project Engineer on the Research and Development staff of National Scientific Laboratories. He has been associated with National Scientific Laboratories since 1952. At present, he is Project Engineer responsible for the design and development of the Telephone Monitor Set, AN/GTA-13(XE-1).

He is a graduate of Capitol Radio Engineering Institute, Washington, D. C.; two year course in electronics engineering with an Associate Engineering Degree. He also attended the Transistor course at CREI. While in the military service he completed the electronic fire control systems course at the U. S. Army Signal School, Fort Monmouth, New Jersey.

Mr. Stimson has demonstrated his capacity for ably carrying the administrative and engineering burdens of several NSL development projects.

Prior to his present design assignment, Mr. Stimson was Senior Engineer, and later Project Engineer on the Synchronizer, SN-228. He was directly responsible for the design of much of the circuitry used in the device. The general circuit types included a stable tuning fork oscillator, counting and gating circuits, Flipflops, trigger circuits, and special delay and timing circuits.

After acceptance of engineering test models by the Signal Corps, Mr. Stimson was appointed Project Engineer on a project to supply ten additional SN-228 Synchronizers. This involved a number of modifications and improvements to the original electrical and mechanical designs, as well as the meeting of strict test requirements. The excellent performance of the Synchronizer led to a commendation from the Signal Corps for the excellent administration, cooperation, and fulfillment of this procurement.

During his earlier years at National Scientific Laboratories, Mr. Stimson participated in the development of a carrier landing trainer system. On this assignment, he assisted the Project Enginee in development, construction, and testing of television camera and

projection equipment. He has contributed to the development of an oscillographic pressure-time recorder. This included circuit design and experimental adjustment of a stable crystal oscillator, frequency dividers, pulse and gate circuits, and regulated power supplies. He has worked in projects involving the use of shielded enclosures and field intensity measuring equipment. This has included the measurement, correction, and suppression of radio interference. He also assisted in the design, construction, and performance testing of an anechoic chamber. Through subsequent use of the chamber, he gained experience in the field of sound measurement and analysis.

While serving in the U. S. Army, Mr. Stimson was concerned with the repair and maintenance of electronic fire control, radar, and computer systems. Specific systems included the T-33 (M-33), and T-38.

JOSEPH HALCHAK

Mr. Halchak is a Staff Engineer with National Scientific Laboratories. In addition to taking part in the design and development of the Monitor Set, Telephone, AN/GTA-13(XE-1), he has participated significantly in several other National Scientific Laboratories design and development projects.

Education:

Maryland University, College Park, Maryland, courses leading toward degree in Electrical Engineering.
George Washington University, Washington, D. C., major studies toward degree in Electrical Engineering.
Graduate, Capitol Radio Engineering Institute, Washington, D. C.
U. S. Army Signal Corps Radio School, Ft. Monmouth, New Jersey.

Experience:

Previous to his present assignment, Mr. Halchak had been involved with the projects for the design and development of and production of the SN-228 Synchronizer Engineering and Service Test Models. His contributions were in circuit design and test, as well as in the fabrication of many of the printed circuit components contained in these units.

Some other projects with which Mr. Halchak has been concerned while at National Scientific Laboratories include a radio transmitter interference reduction study; a study of the use of neon tubes as elements in matrices; the development of low level transistor switching and regulating devices, their miniaturization, and their packaging; the design and construction of an electronic correlator for use in signal detection under unfavorable conditions; the design and construction of an electromechanical shift register; the investigation of phase locked oscillators for use as logic elements; and the study of tunnel diodes for use as logic elements, shift registers, etc.

While in the U. S. Army, he was assigned to the installation, repair, and maintenance of communications equipment as a member of the White House Signal Detachment.

P. J. MONDIN

Mr. Mondin is a member of the Research and Development Staff at National Scientific Laboratories, Inc. in the capacity of a Senior Electronic Engineer. His present assignment is to a project for which he has made extensive studies involving all phases of the detection, measurement, and correction of spurious radiation. He has been with NSL since December, 1959.

Education:

Graduate courses at George Washington University which will lead to MSEE degree.
West Virginia University, BSEE degree.
Transistor courses at Capitol Radio Engineering Institute, Washington, D. C.

Professional affiliations:

American Institute of Electrical Engineering
Institute of Radio Engineers

Experience:

During the time Mr. Mondin has been associated with NSL, he has done research for several laboratory projects. In addition to his studies relating to measurement and reduction of RFI, other of his NSL assignments have included projects such as study and design for the Multiline Monitor.

Before joining the NSL staff, Mr. Mondin was an R and D engineer with a large production and development concern. He designed and developed such communication circuitry as IF amplifiers, oscillators, detectors, discriminators, video amplifiers, and associated circuits.

While concerned with the data processing field, Mr. Mondin designed and developed bistable, astable, and monostable circuits, as well as gating circuits for programming devices. He optimized the design of transistorized data storage circuits including pulse amplifiers and diode matrices. He is familiar with the use of Veitch diagrams in Boolean expressions, simplification techniques for optimum Boolean transfer functions, and design of circuits to achieve final expression.

During this time, his experience also included preproduction testing leading to the redesign and optimizing of electronic circuits His experience was specifically applied to the fields of airborne reconnaissance, pulse and data handling equipments.

ROBERT L. ADAMS

Mr. Adams is a Junior Engineer on the Research and Development staff of National Scientific Laboratories. At present, he is working on the design of transistor circuits for the Telephone Monitor Set and on a Hall effect device for measuring magnetic fields.

Education:

Continuing studies toward an Electrical Engineering degree: accumulated credits have been earned at Virginia Polytechnic Institute, George Washington University, and the University of Virginia.

Experience:

Prior to joining the staff of National Scientific Laboratories, Mr. Adams worked both as a Technician and as a Junior Design Engineer on projects concerned with radar simulators, time sequence display circuitry, and magnetic shift registers.

Mr. Adams has a remarkable talent for the design of circuits and electrical devices. Some of these projects have won him recognition at both state and regional levels. He designed and built a radio transmitter capable of tuning automatically to the frequency of a received signal. Another of his devices was a speech analyzer. This unit converted speech into electrical code and made a recording. The repetition of the same word caused the machine to exhibit a light signal indicating the repeat. He was also the winner of a Bausch and Lomb award.

Currently, Mr. Adams is building a laser or optical maser. In this connection, he is attempting to increase the efficiency of the laser. This is to be a solid state device utilizing a ruby as the laser material.

ERNEST W. STALDER

Mr. Stalder is a Physicist on the Research and Development Staff of National Scientific Laboratories, Inc. Since August, 1961, he has been associated with several laboratory projects. His current assignment involves the investigation of the Hall-effect as applied to the measurement of magnetic fields.

Education:

Presently enrolled at the Catholic University of America taking courses leading to a PhD degree in Physics. Previous courses in Physics at the University of Maryland.

Northwestern University, Evanston, Illinois; MS in Physics, August, 1958.

Northwestern University; BSEE, June, 1957.

Publications:

"Anisotropy of the Magneto-electric Effect in Cr_2O_3", Physical Review Letters, June 1, 1961; Folen, Rado, Stalder.

Experience:

While on the NSL staff, Mr. Stalder was engaged in experimental work on antiferromagnetism in solid state physics. While with another large engineering firm, he observed and participated in an existing molecular electronics operation with a view toward establishing a similar laboratory for research and development in microcircuitry techniques.

Mr. Stalder has had experience in programming and operating digital computers. He also has done work on improving the regulation, ripple, and stability characteristics of microwave power supplies.

While at Northwestern University, he did experimental research on X-ray polarization by scattering, on the work function of photocathodes, and on the conductivity of indium antimonide. Later, he investigated creep-rates in ice monocrystals and grew polycrystalline ice of random orientation.

WILLIAM L. CALLENDER

Mr. Callender is a Senior Mechanical Engineer and for many years has been Engineer in charge of the Model Shop of National Scientific Laboratories. He is responsible for the operation and direction of all creative activities of a mechanical nature. During his service, he has improved shop facilities, broadened project capability, and established methods for improving the capacity and quality of work. In addition to the above duties, Mr. Callender has participated in numerous Research and Development projects.

Education:

George Washington University, Washington, D. C., Mechanical Engineering

Experience:

While employed by National Scientific Laboratories, Mr. Callender has contributed to the design, development, and fabrication of miniature power supplies, servo controlled heavy gimbal assemblies, and numerous complex electromechanical devices. He was Project Engineer and sole designer of the mechanical and electrical control assemblies of special film projection equipment for the National Institutes of Mental Health.

Before joining the NSL staff, Mr. Callender was Engineer-owner of the Accelabar Company, Bladensburg, Maryland. He also held positions as Engineer/Vice President, Engineer/Tool Designer, and First Class Toolmaker with industrial and research organizations. As such, he did research, design, and development work on various mechanical and electromechanical devices, including internal combustion engines, automatic door operators, vending machines, telemetering equipment, scanning devices, etc.

Mr. Callender has made special studies of precision mechanical inspection techniques, surface funishing methods, and metallurgy related thereto. He has designed and produced special tools, jigs, and fixtures. He holds various patent rights, including a U. S. Patent on a basic mechanical movement. His experience in production work gives him an insight with regard to initial design that results in favorable tooling and production costs.

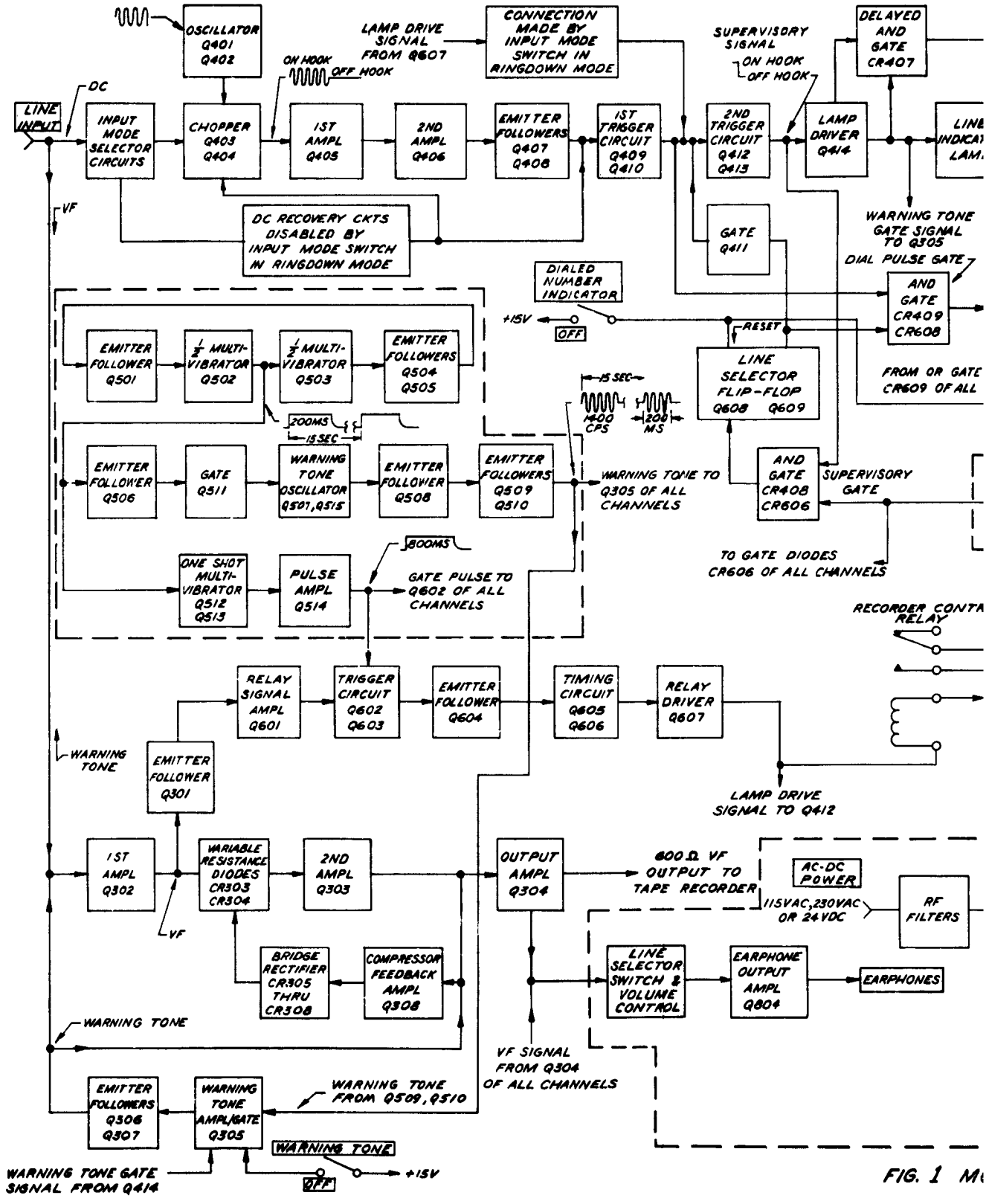

FIG. 1 M

[redacted]

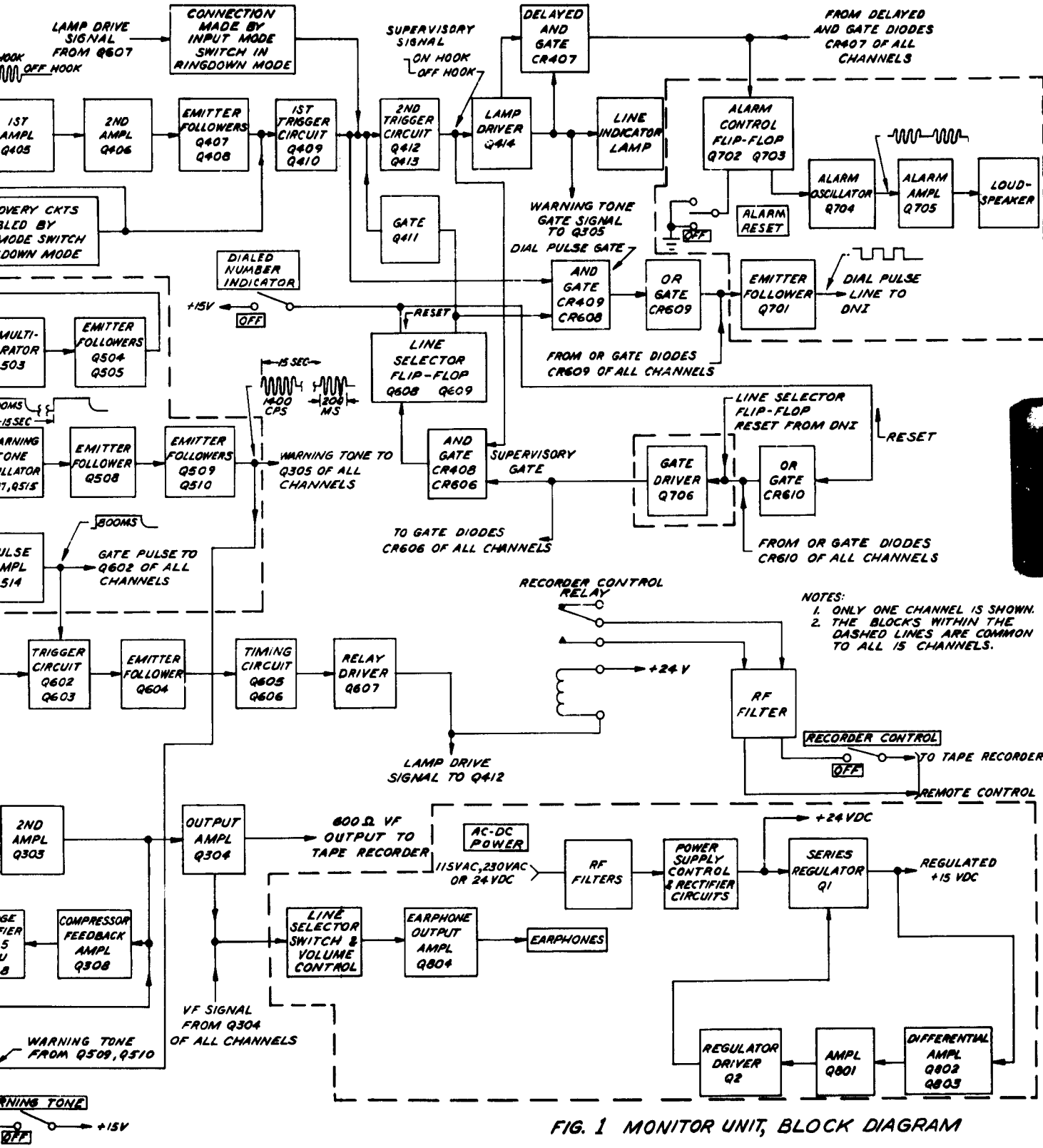

FIG. 1 MONITOR UNIT, BLOCK DIAGRAM

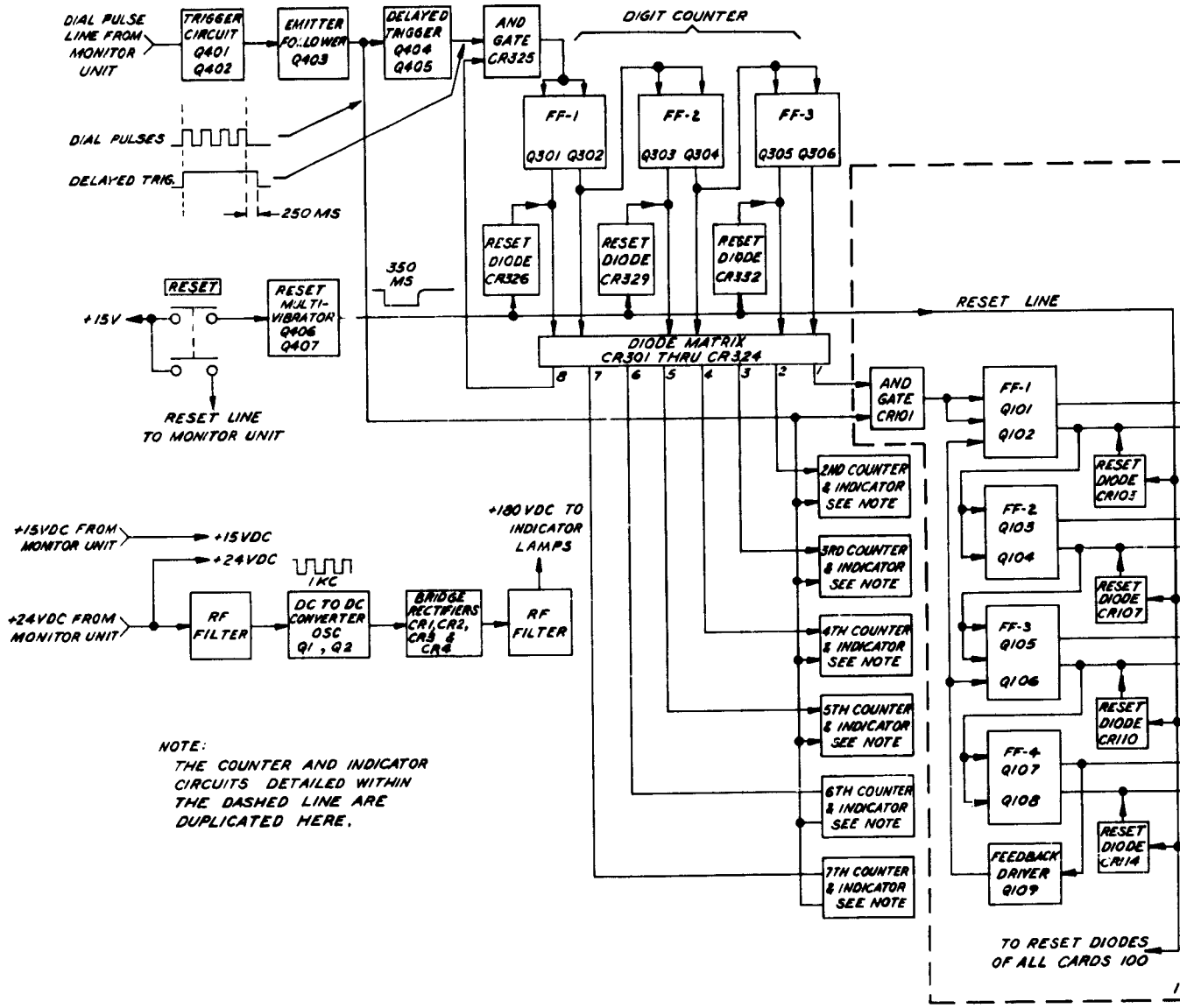
DIAL PULSE LINE FROM MONITOR UNIT
TRIGGER CIRCUIT Q401 Q402
EMITTER FOLLOWER Q403
DELAYED TRIGGER Q404 Q405
AND GATE CR325
DIGIT COUNTER
FF-1 Q301 Q302
FF-2 Q303 Q304
FF-3 Q305 Q306
DIAL PULSES
DELAYED TRIG.
250 MS
RESET DIODE CR326
RESET DIODE CR329
RESET DIODE CR332
350 MS
RESET
+15V
RESET MULTI-VIBRATOR Q406 Q407
RESET LINE TO MONITOR UNIT
RESET LINE
DIODE MATRIX CR301 THRU CR324
8 7 6 5 4 3 2 1
AND GATE CR101
FF-1 Q101 Q102
RESET DIODE CR103
2ND COUNTER & INDICATOR SEE NOTE
FF-2 Q103 Q104
3RD COUNTER & INDICATOR SEE NOTE
RESET DIODE CR107
4TH COUNTER & INDICATOR SEE NOTE
FF-3 Q105 Q106
5TH COUNTER & INDICATOR SEE NOTE
RESET DIODE CR110
FF-4 Q107 Q108
6TH COUNTER & INDICATOR SEE NOTE
RESET DIODE CR114
FEEDBACK DRIVER Q109
7TH COUNTER & INDICATOR SEE NOTE
TO RESET DIODES OF ALL CARDS 100
+15VDC FROM MONITOR UNIT
+15VDC
+24VDC
+24VDC FROM MONITOR UNIT
RF FILTER
1KC
DC TO DC CONVERTER OSC Q1, Q2
BRIDGE RECTIFIERS CR1, CR2, CR3 & CR4
RF FILTER
+180 VDC TO INDICATOR LAMPS
NOTE:
THE COUNTER AND INDICATOR CIRCUITS DETAILED WITHIN THE DASHED LINE ARE DUPLICATED HERE.
1S

FIG. 2

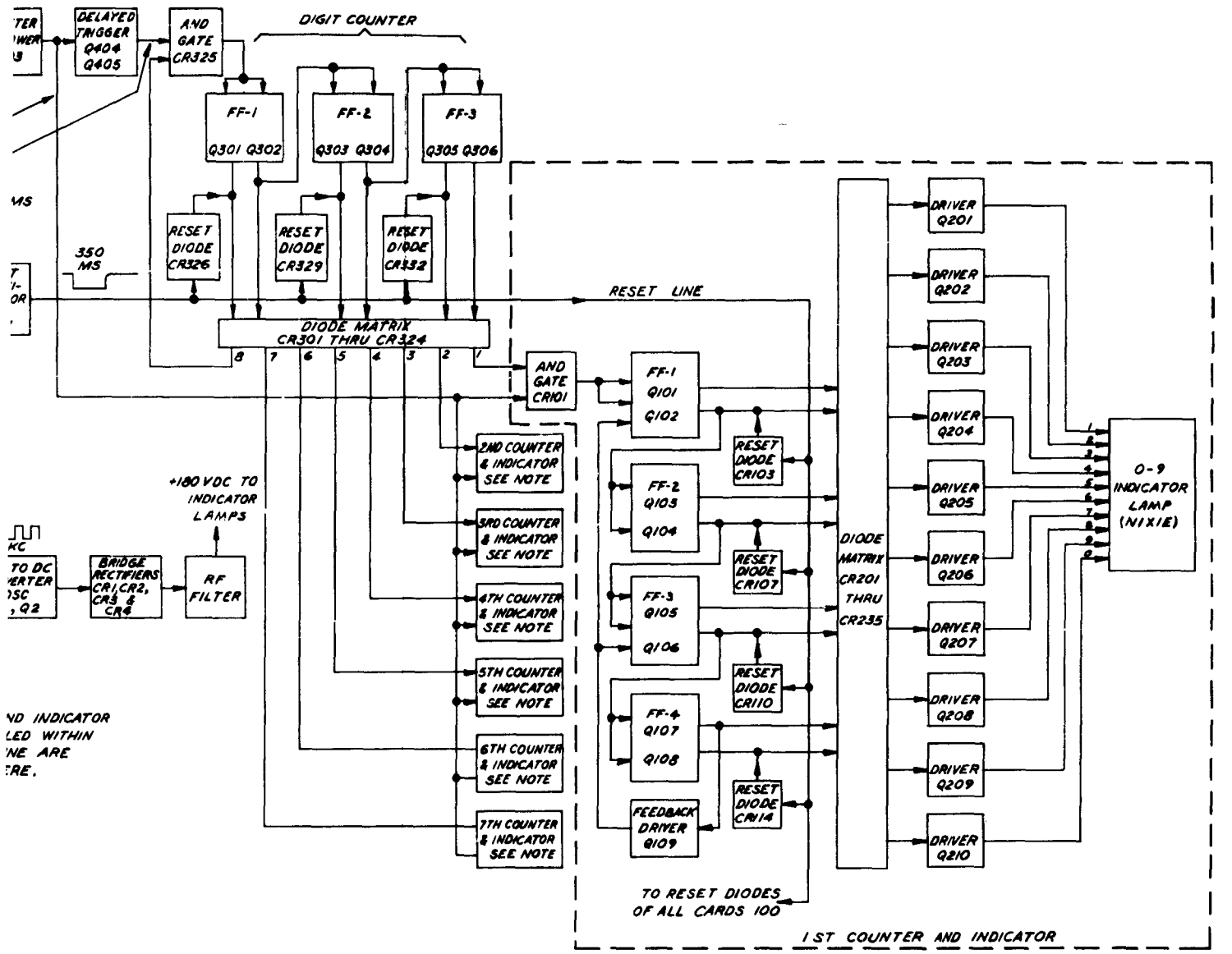

FIG. 2 DIALED NUMBER INDICATOR, BLOCK DIAGRAM

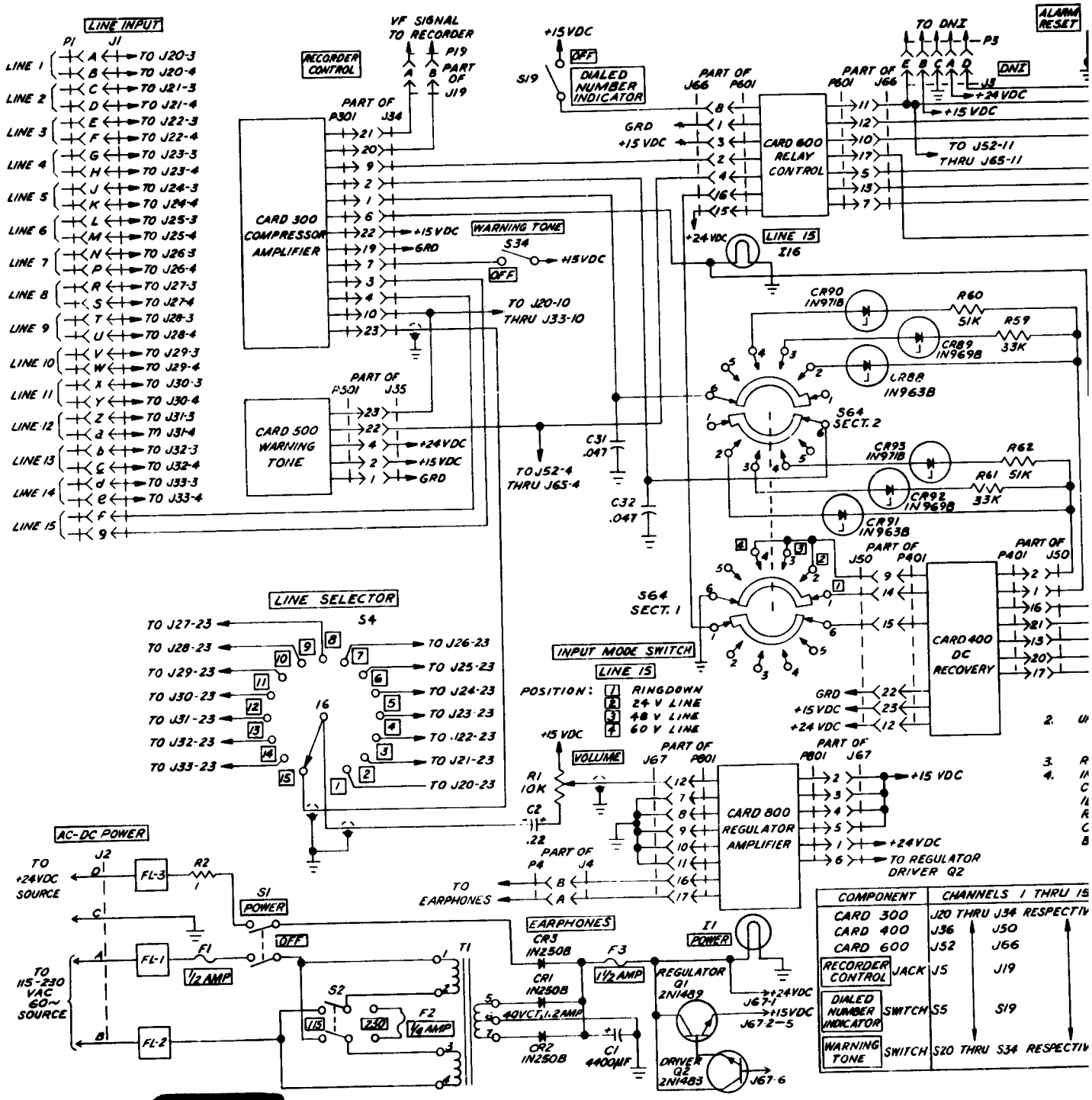

COMPONENT		CHANNELS 1 THRU 15
CARD 300		J20 THRU J34 RESPECTIV
CARD 400		J36 J50
CARD 600		J52 J66
RECORDER CONTROL	JACK	J5 J19
DIALED NUMBER INDICATOR	SWITCH	S5 S19
WARNING TONE	SWITCH	S20 THRU S34 RESPECTIV

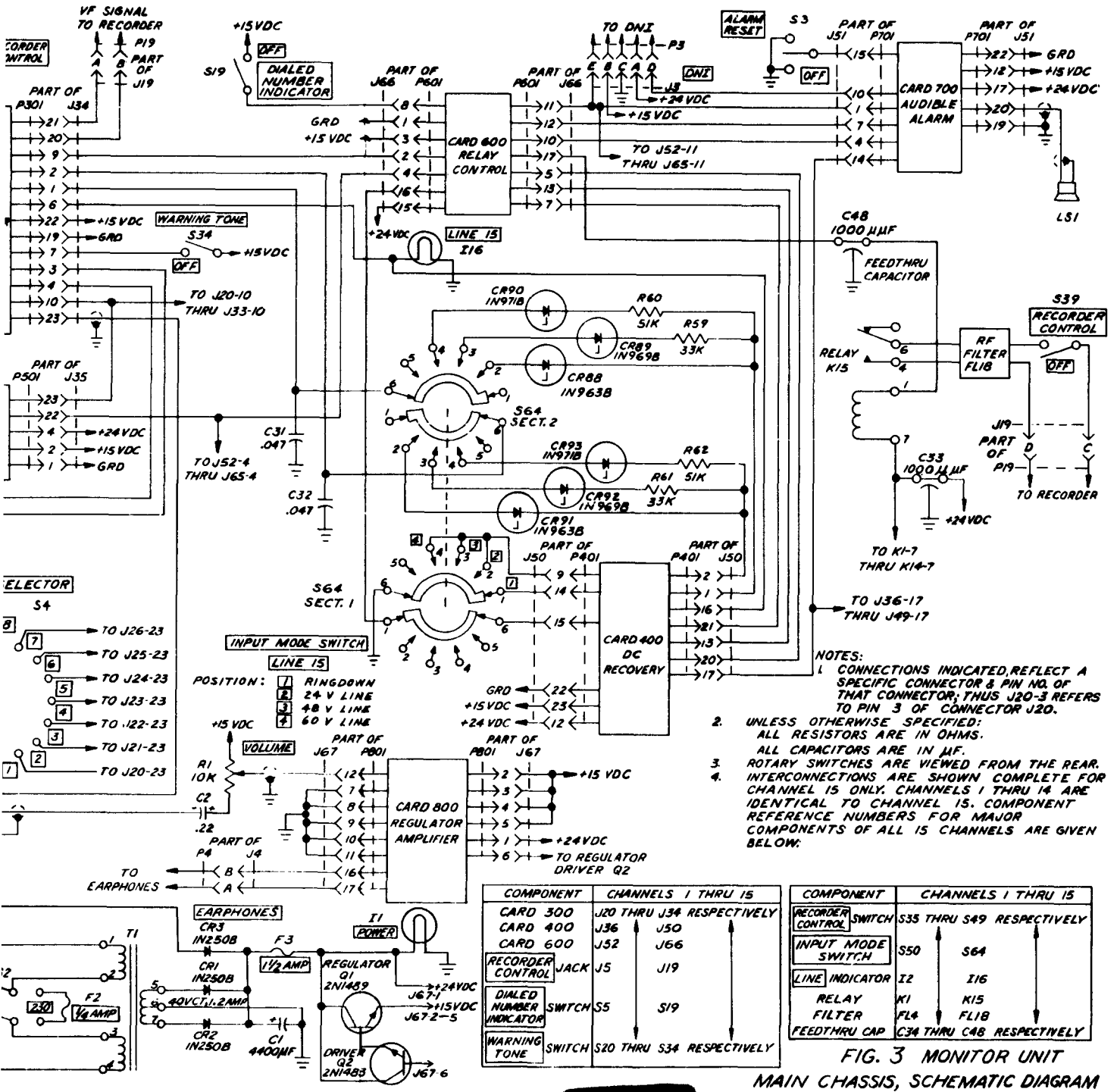

NOTES:

1. CONNECTIONS INDICATED, REFLECT A SPECIFIC CONNECTOR & PIN NO. OF THAT CONNECTOR; THUS J20-3 REFERS TO PIN 3 OF CONNECTOR J20.
2. UNLESS OTHERWISE SPECIFIED:
   ALL RESISTORS ARE IN OHMS.
   ALL CAPACITORS ARE IN µF.
3. ROTARY SWITCHES ARE VIEWED FROM THE REAR.
4. INTERCONNECTIONS ARE SHOWN COMPLETE FOR CHANNEL 15 ONLY. CHANNELS 1 THRU 14 ARE IDENTICAL TO CHANNEL 15. COMPONENT REFERENCE NUMBERS FOR MAJOR COMPONENTS OF ALL 15 CHANNELS ARE GIVEN BELOW.

COMPONENT	CHANNELS 1 THRU 15
CARD 300	J20 THRU J34 RESPECTIVELY
CARD 400	J36 J50
CARD 600	J52 J66
RECORDER CONTROL JACK	J5 J19
DIALED NUMBER INDICATOR SWITCH	S5 S19
WARNING TONE SWITCH	S20 THRU S34 RESPECTIVELY

COMPONENT	CHANNELS 1 THRU 15
RECORDER CONTROL SWITCH	S35 THRU S49 RESPECTIVELY
INPUT MODE SWITCH	S50 S64
LINE INDICATOR	I2 I16
RELAY	K1 K15
FILTER	FL4 FL18
FEEDTHRU CAP	C34 THRU C48 RESPECTIVELY

FIG. 3 MONITOR UNIT
MAIN CHASSIS, SCHEMATIC DIAGRAM

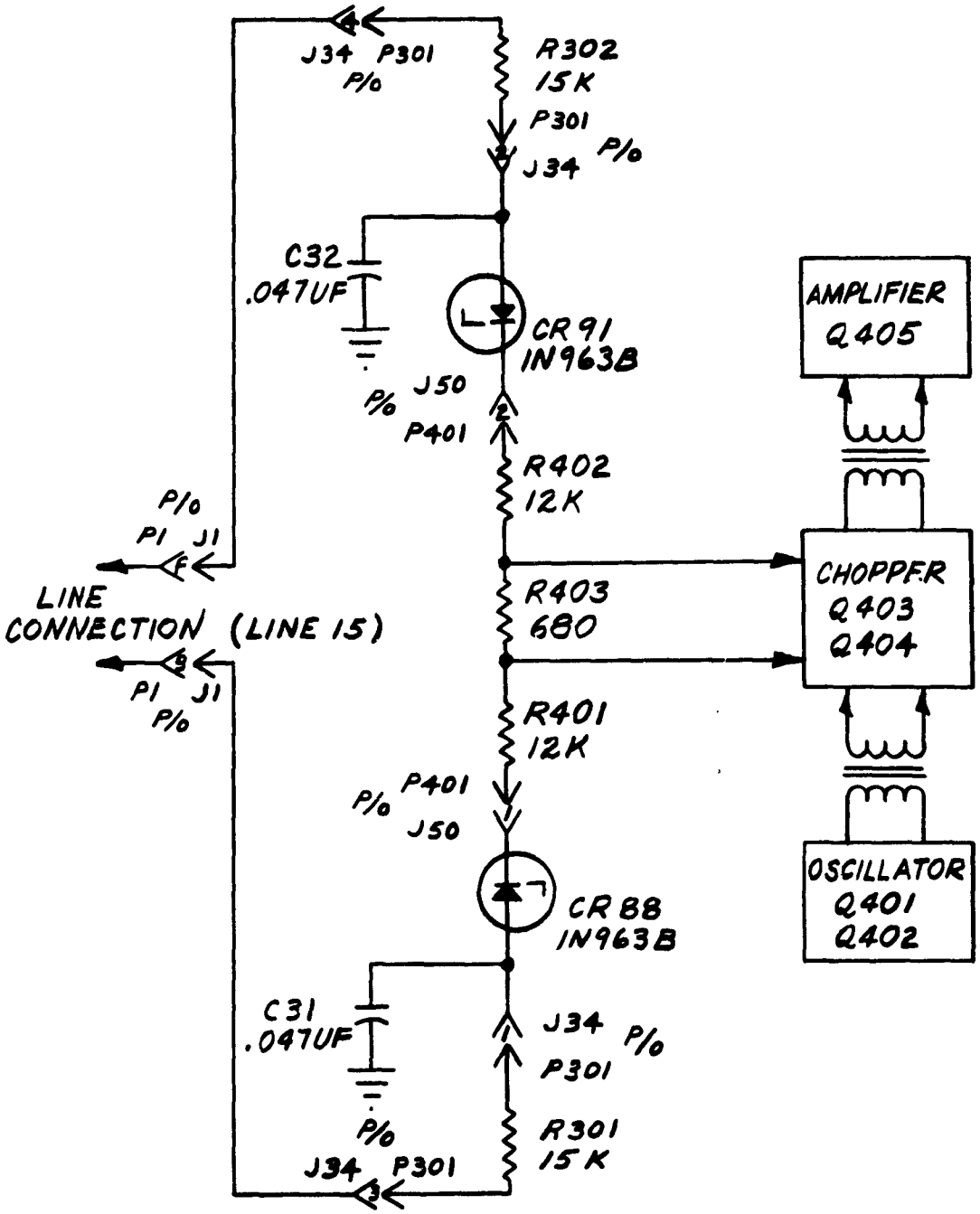

FIGURE 4. INPUT CIRCUIT, 24 VOLT LINE, SIMPLIFIED DIAGRAM.

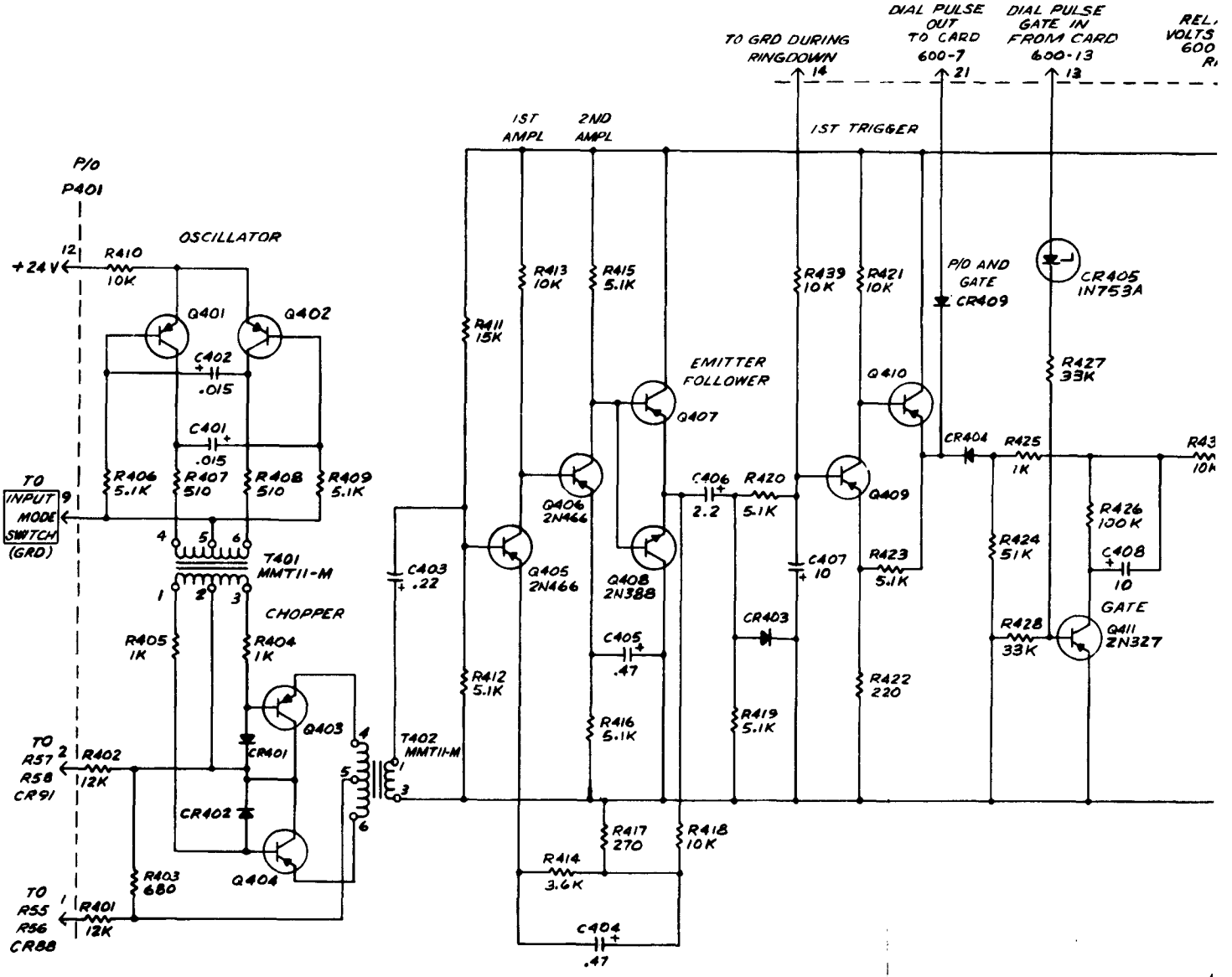
P/O
P401
+24V
12
R410
10K
OSCILLATOR
Q401
Q402
C402
.015
C401
.015
TO
INPUT
MODE
SWTCH
(GRD)
9
R406
5.1K
R407
510
R408
510
R409
5.1K
T401
MMT11-M
CHOPPER
R405
1K
R404
1K
Q403
CR401
CR402
Q404
TO
R57
R58
CR91
R402
12K
R403
680
TO
R55
R56
CR88
R401
12K
T402
MMT11-M
C403
.22
R411
15K
R412
5.1K
1ST
AMPL
2ND
AMPL
R413
10K
R415
5.1K
Q406
2N466
Q405
2N466
EMITTER
FOLLOWER
Q407
Q408
2N388
C405
.47
R416
5.1K
R417
270
R418
10K
R414
3.6K
C404
.47
TO GRD DURING
RINGDOWN
14
1ST TRIGGER
R439
10K
R421
10K
Q410
C406
2.2
R420
5.1K
Q409
C407
10
R423
5.1K
CR403
R419
5.1K
R422
220
DIAL PULSE
OUT
TO CARD
600-7
21
P/O AND
GATE
CR409
CR404
DIAL PULSE
GATE IN
FROM CARD
600-13
13
CR405
1N753A
R427
33K
R425
1K
R424
51K
R426
100K
C408
10
GATE
R428
33K
Q411
2N327

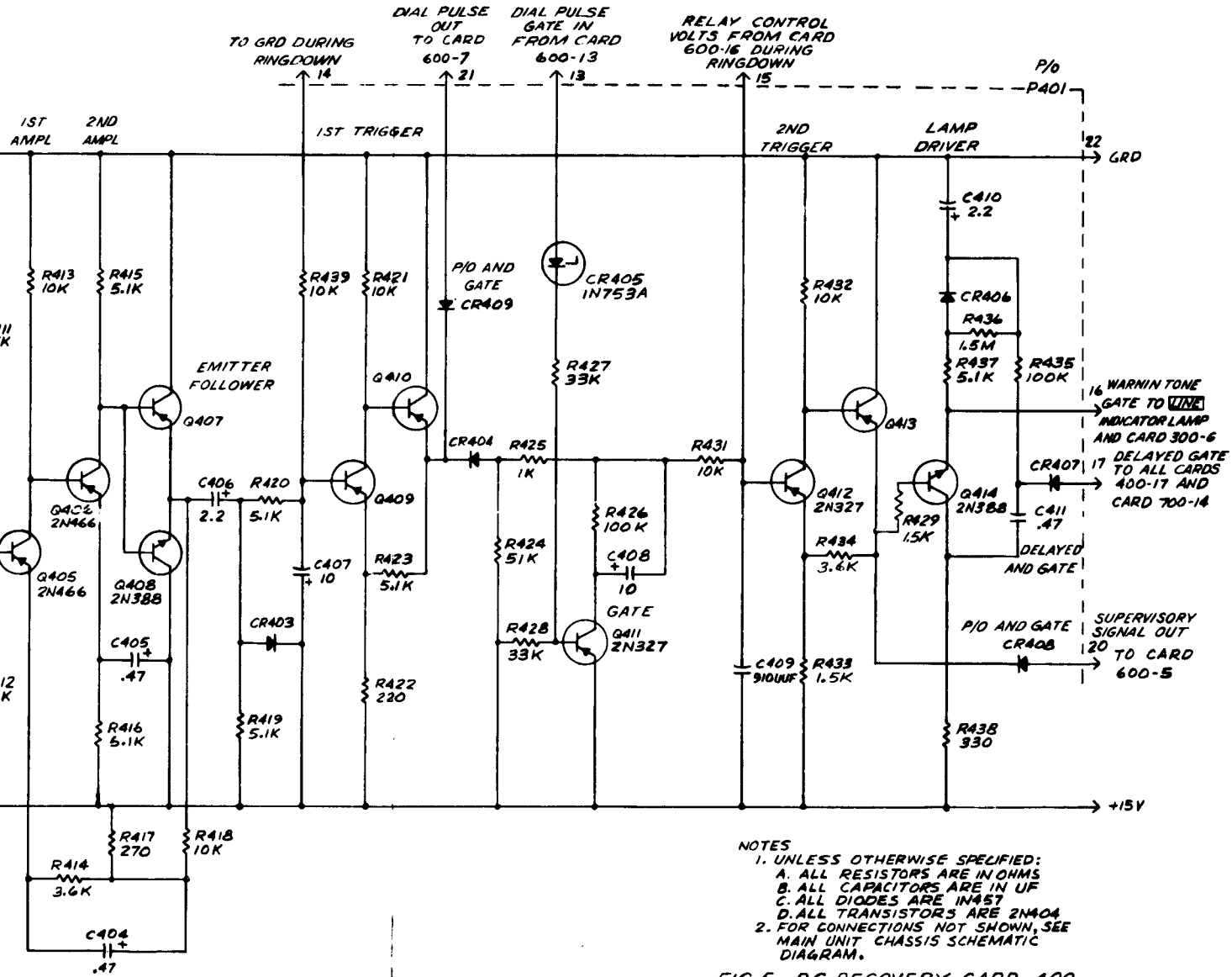

NOTES
1. UNLESS OTHERWISE SPECIFIED:
   A. ALL RESISTORS ARE IN OHMS
   B. ALL CAPACITORS ARE IN UF
   C. ALL DIODES ARE 1N457
   D. ALL TRANSISTORS ARE 2N404
2. FOR CONNECTIONS NOT SHOWN, SEE MAIN UNIT CHASSIS SCHEMATIC DIAGRAM.

FIG. 5 D.C. RECOVERY, CARD 400, SCHEMATIC DIAGRAM

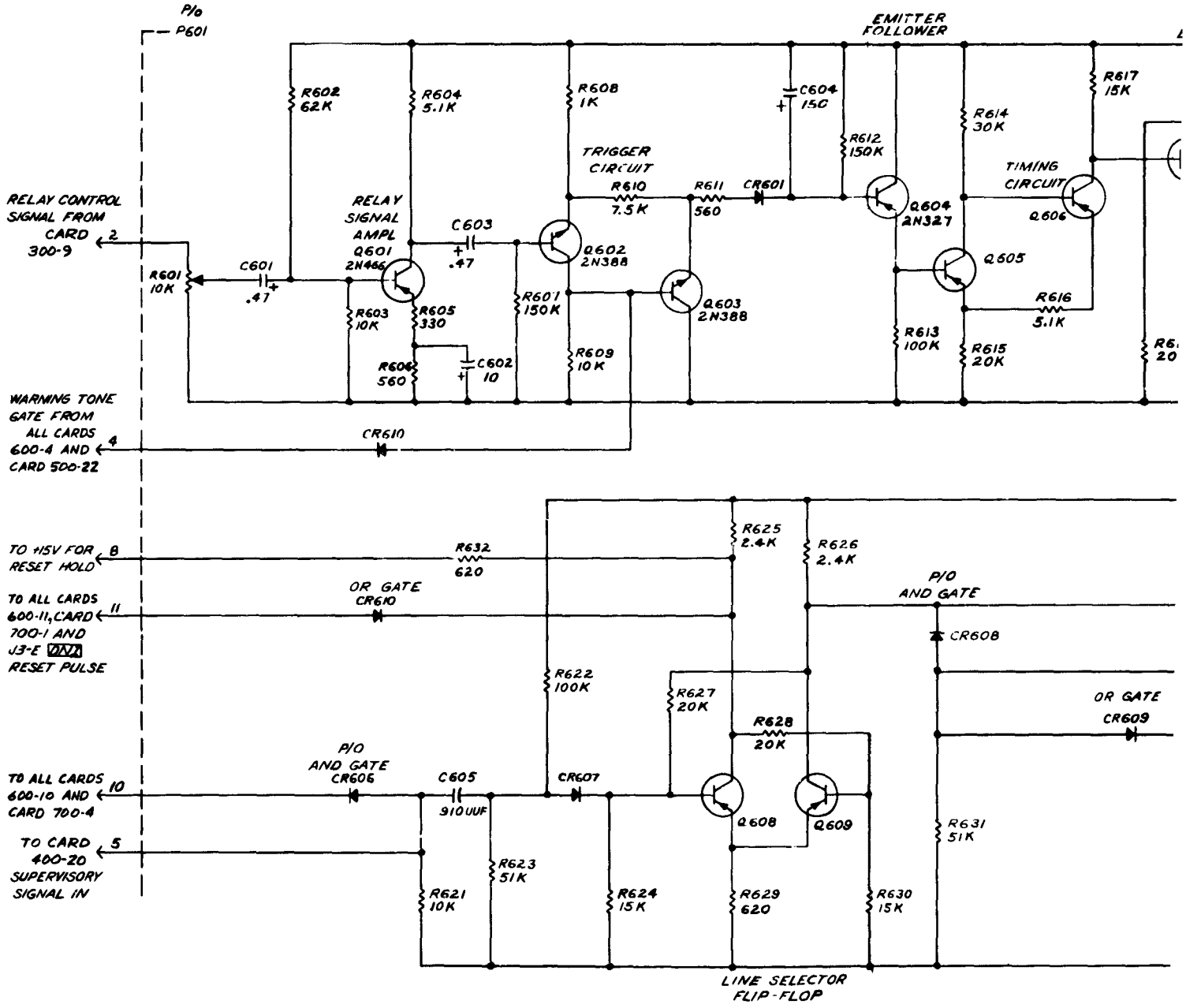
P/O
P601
EMITTER FOLLOWER
R602 62K
R604 5.1K
R608 1K
C604 15C
R612 150K
R614 30K
R617 15K
TRIGGER CIRCUIT
R610 7.5K
R611 560
CR601
TIMING CIRCUIT
RELAY CONTROL SIGNAL FROM CARD 300-9
2
RELAY SIGNAL AMPL
Q601 2N466
C603 .47
Q602 2N388
Q604 2N327
Q606
Q605
R601 10K
C601 .47
R603 10K
R605 330
R607 150K
Q603 2N388
R616 5.1K
R613 100K
R615 20K
R606 560
C602 10
R609 10K
WARNING TONE GATE FROM ALL CARDS 600-4 AND CARD 500-22
4
CR610
TO +15V FOR RESET HOLD
8
R632 620
R625 2.4K
R626 2.4K
TO ALL CARDS 600-11, CARD 700-1 AND J3-E RESET PULSE
11
OR GATE CR610
P/O AND GATE
CR608
R622 100K
R627 20K
R628 20K
OR GATE CR609
P/O AND GATE CR606
C605 910UUF
CR607
TO ALL CARDS 600-10 AND CARD 700-4
10
Q608
Q609
R631 51K
TO CARD 400-20 SUPERVISORY SIGNAL IN
5
R623 51K
R621 10K
R624 15K
R629 620
R630 15K
LINE SELECTOR FLIP-FLOP

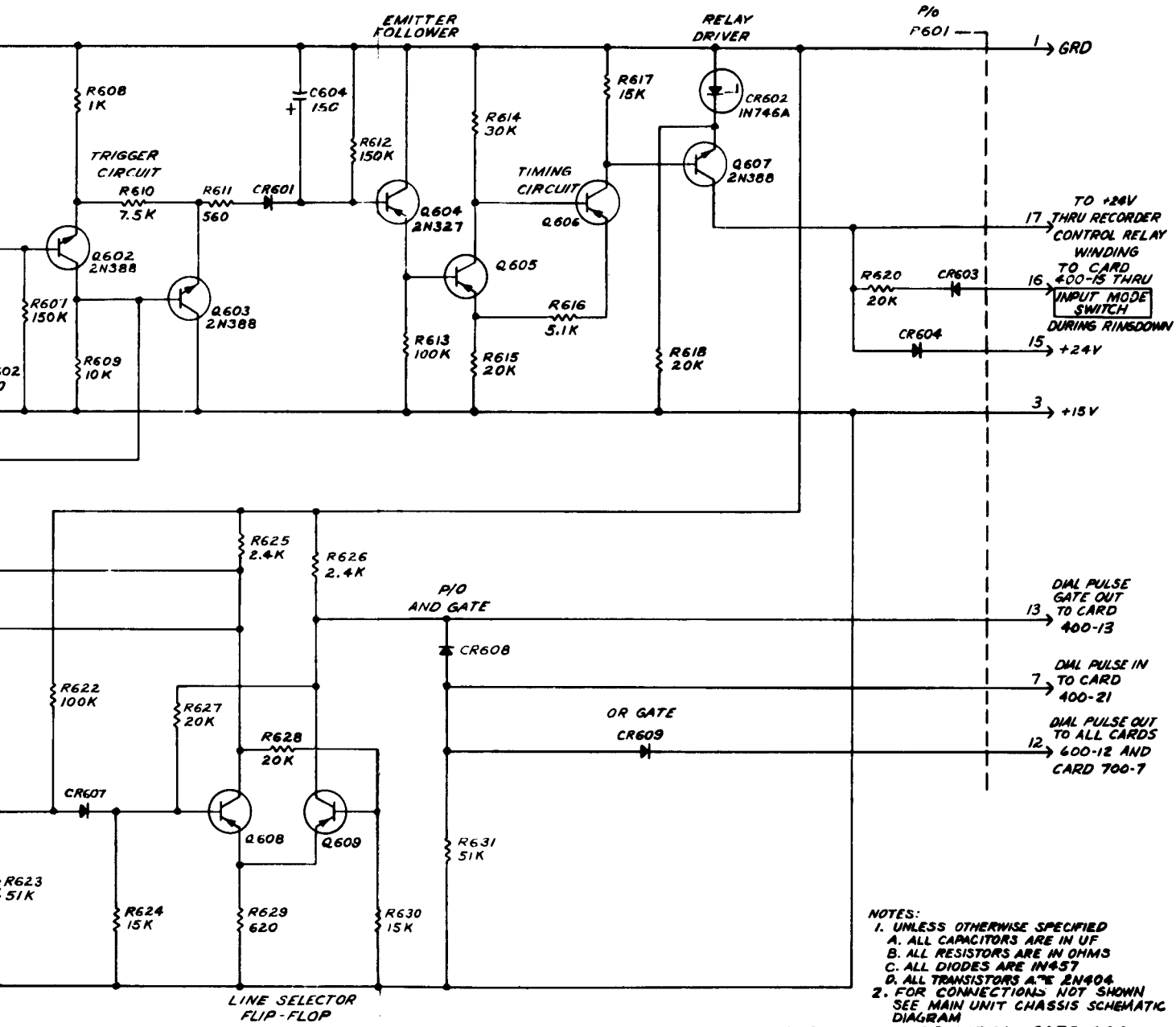

NOTES:
1. UNLESS OTHERWISE SPECIFIED
   A. ALL CAPACITORS ARE IN UF
   B. ALL RESISTORS ARE IN OHMS
   C. ALL DIODES ARE IN457
   D. ALL TRANSISTORS ARE 2N404
2. FOR CONNECTIONS NOT SHOWN SEE MAIN UNIT CHASSIS SCHEMATIC DIAGRAM

FIG. 6 RELAY CONTROL, CARD 600, SCHEMATIC DIAGRAM

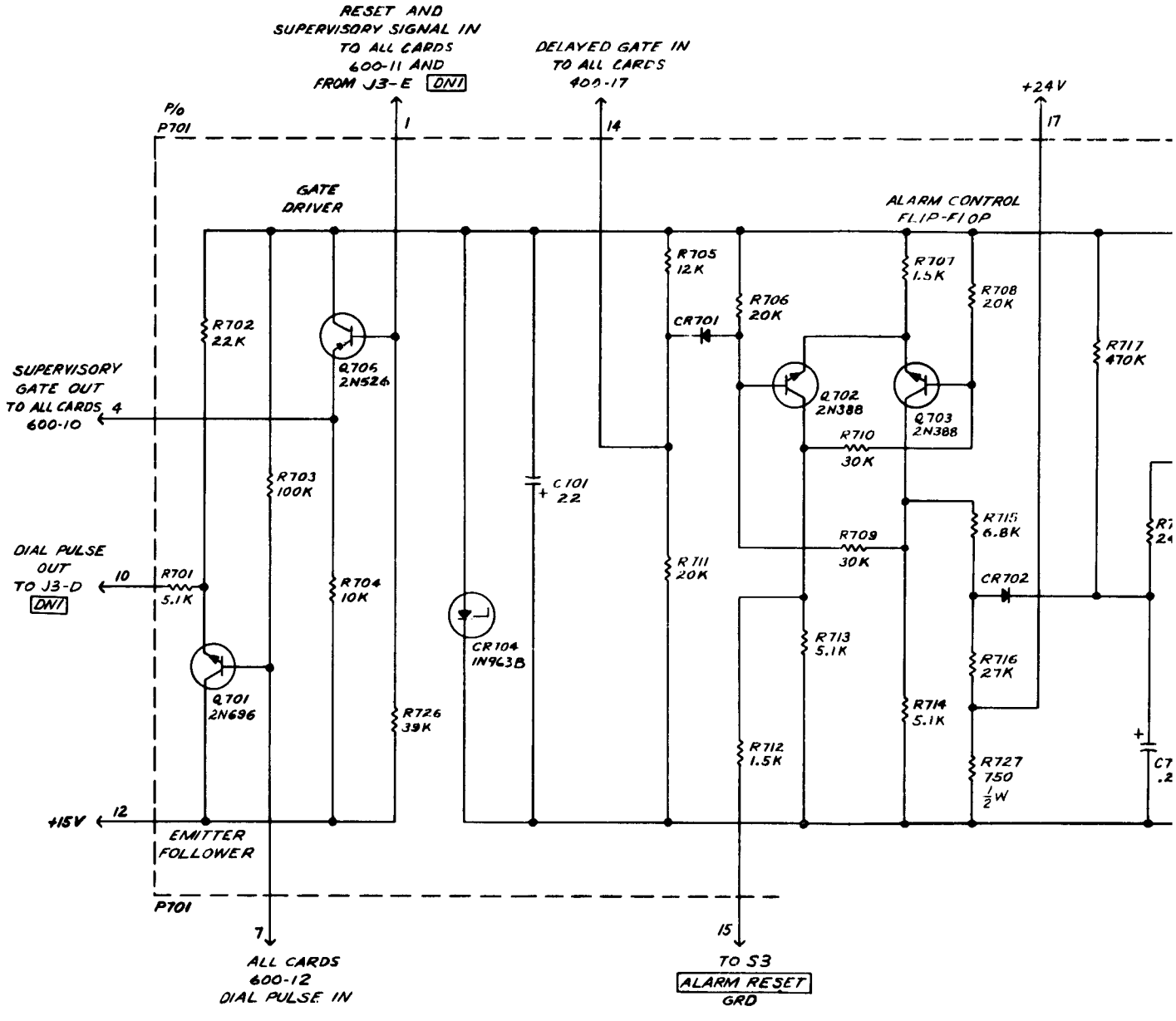
RESET AND
SUPERVISORY SIGNAL IN
TO ALL CARDS
600-11 AND
FROM J3-E DN1
DELAYED GATE IN
TO ALL CARDS
400-17
+24V
P/o
P701
1
14
17
GATE
DRIVER
ALARM CONTROL
FLIP-FLOP
R705
12K
R707
1.5K
R708
20K
R706
20K
CR701
R702
22K
Q705
2N526
R717
470K
SUPERVISORY
GATE OUT
TO ALL CARDS 4
600-10
Q702
2N388
Q703
2N388
R710
30K
R703
100K
C101
22
R715
6.8K
R709
30K
DIAL PULSE
OUT
TO J3-D
DN1
10
R701
5.1K
R704
10K
R711
20K
CR702
CR104
1N963B
R713
5.1K
R716
27K
Q701
2N696
R726
39K
R714
5.1K
R712
1.5K
R727
750
1/2 W
+15V
12
EMITTER
FOLLOWER
P701
7
ALL CARDS
600-12
DIAL PULSE IN
15
TO S3
ALARM RESET
GRD

[redacted]

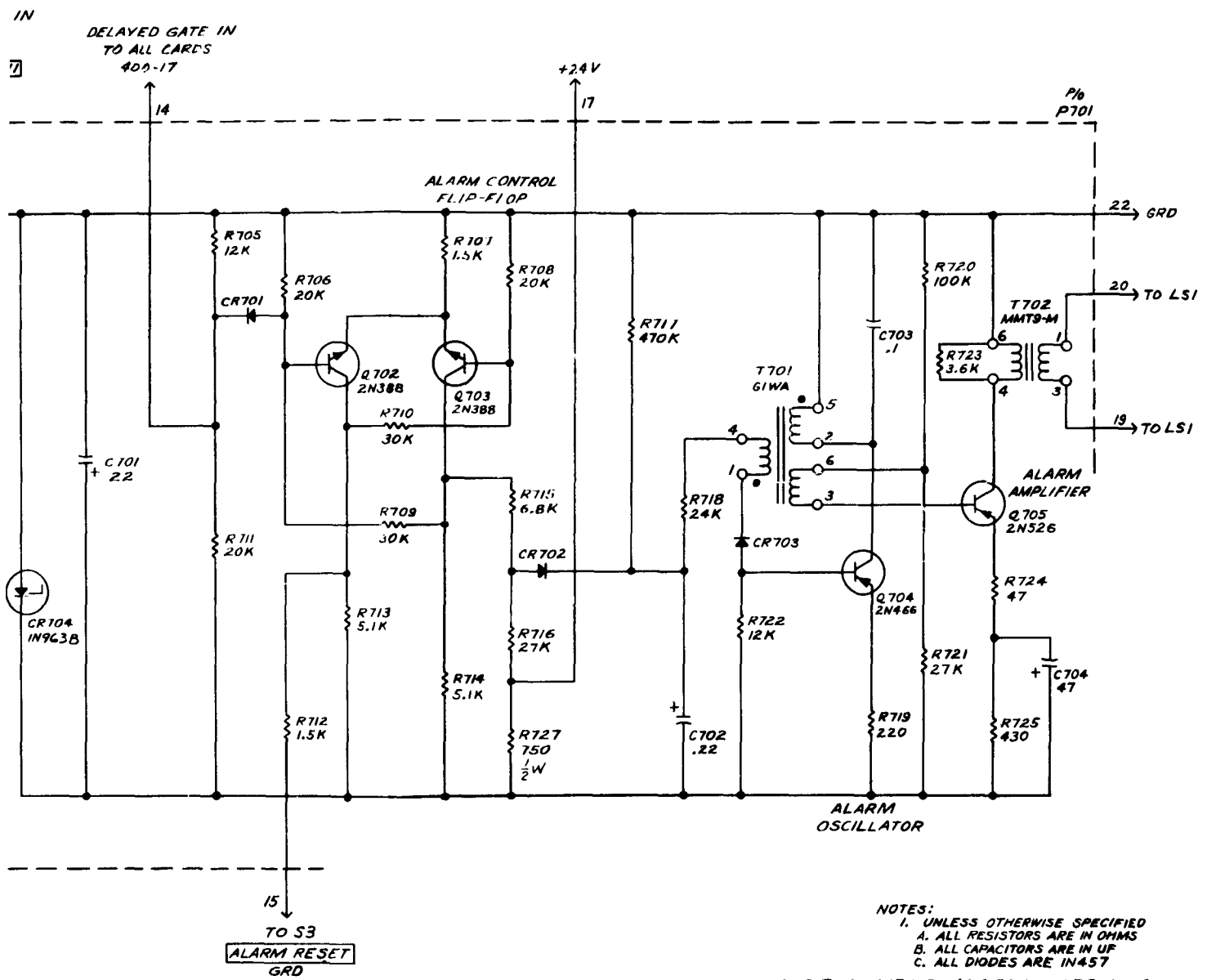

NOTES:
1. UNLESS OTHERWISE SPECIFIED
A. ALL RESISTORS ARE IN OHMS
B. ALL CAPACITORS ARE IN UF
C. ALL DIODES ARE IN457

FIG. 7 AUDIBLE ALARM, CARD 700
SCHEMATIC DIAGRAM

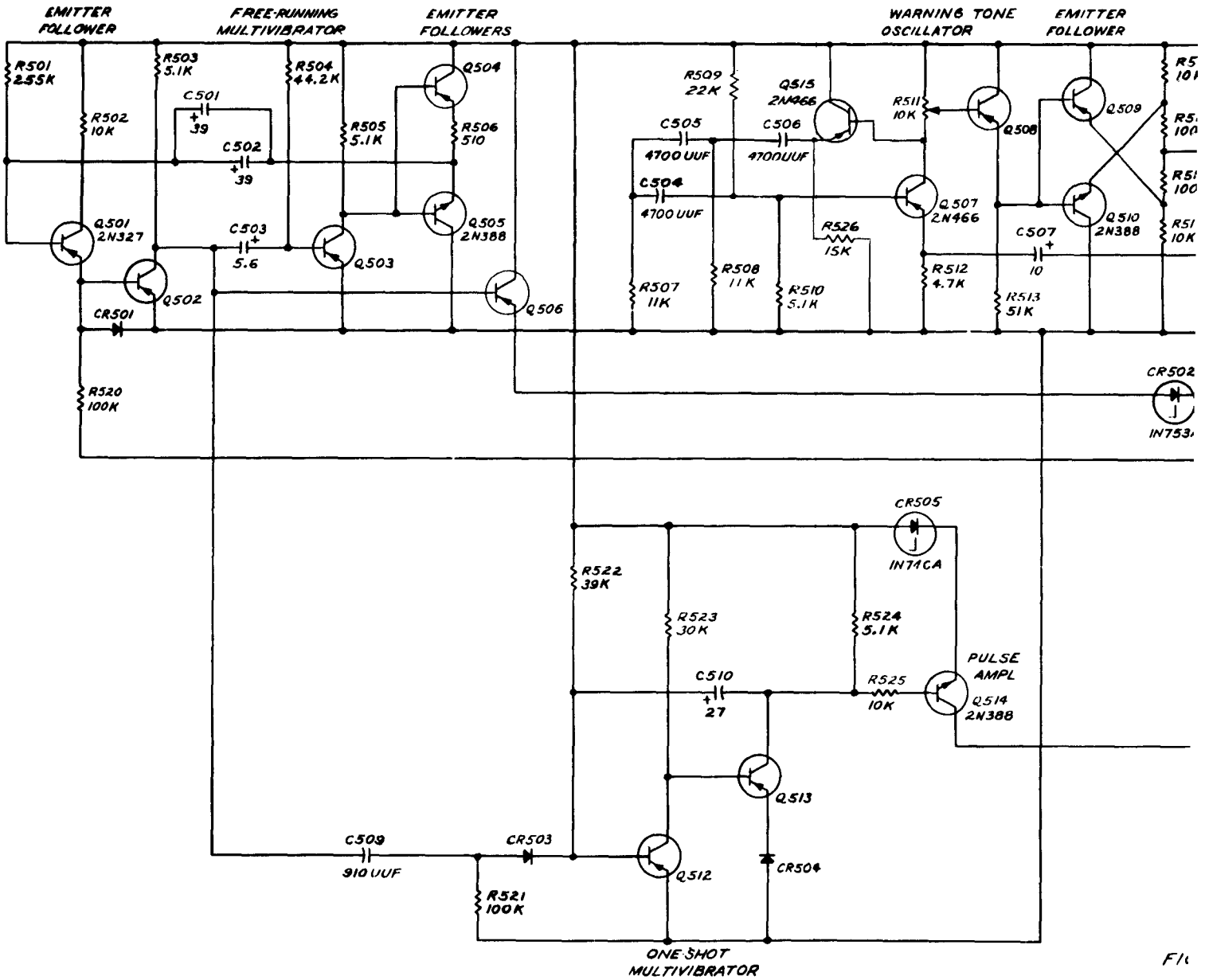
EMITTER FOLLOWER
FREE-RUNNING MULTIVIBRATOR
EMITTER FOLLOWERS
WARNING TONE OSCILLATOR
EMITTER FOLLOWER
R501 255K
R502 10K
R503 5.1K
C501 39
C502 39
R504 44.2K
R505 5.1K
R506 510
Q504
Q505 2N388
Q501 2N327
Q502
C503 5.6
Q503
CR501
R520 100K
Q506
R509 22K
Q515 2N466
C505 4700 UUF
C506 4700UUF
C504 4700 UUF
R507 11K
R508 11K
R510 5.1K
R526 15K
R511 10K
Q508
Q507 2N466
R512 4.7K
C507 10
R513 51K
Q509
Q510 2N388
CR502
IN753
CR505
IN714A
R522 39K
R523 30K
R524 5.1K
C510 27
R525 10K
PULSE AMPL
Q514 2N388
Q513
C509 910 UUF
CR503
Q512
CR504
R521 100K
ONE-SHOT MULTIVIBRATOR

FI

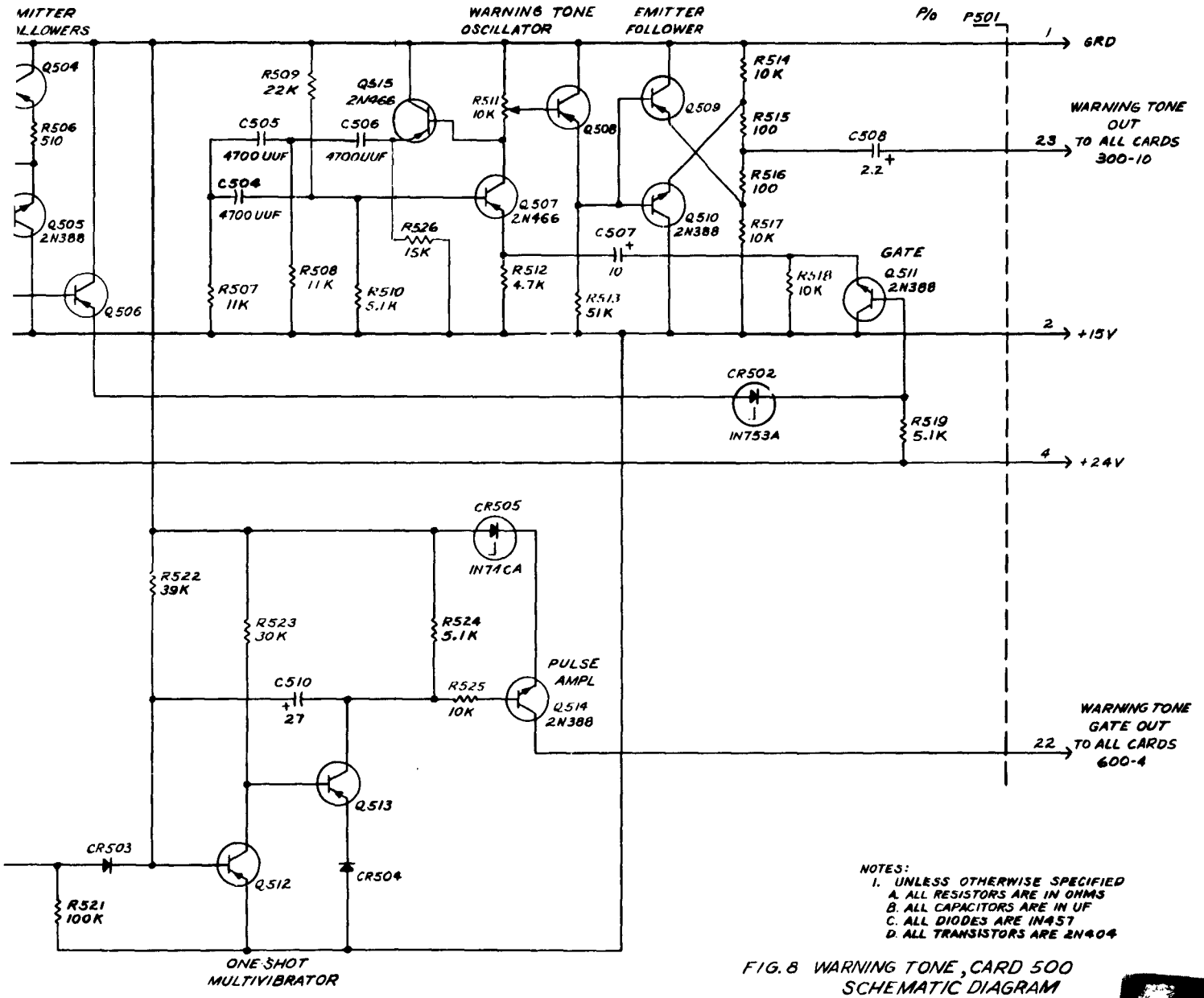

NOTES:
1. UNLESS OTHERWISE SPECIFIED
   A. ALL RESISTORS ARE IN OHMS
   B. ALL CAPACITORS ARE IN UF
   C. ALL DIODES ARE IN457
   D. ALL TRANSISTORS ARE 2N404

FIG. 8 WARNING TONE, CARD 500
SCHEMATIC DIAGRAM

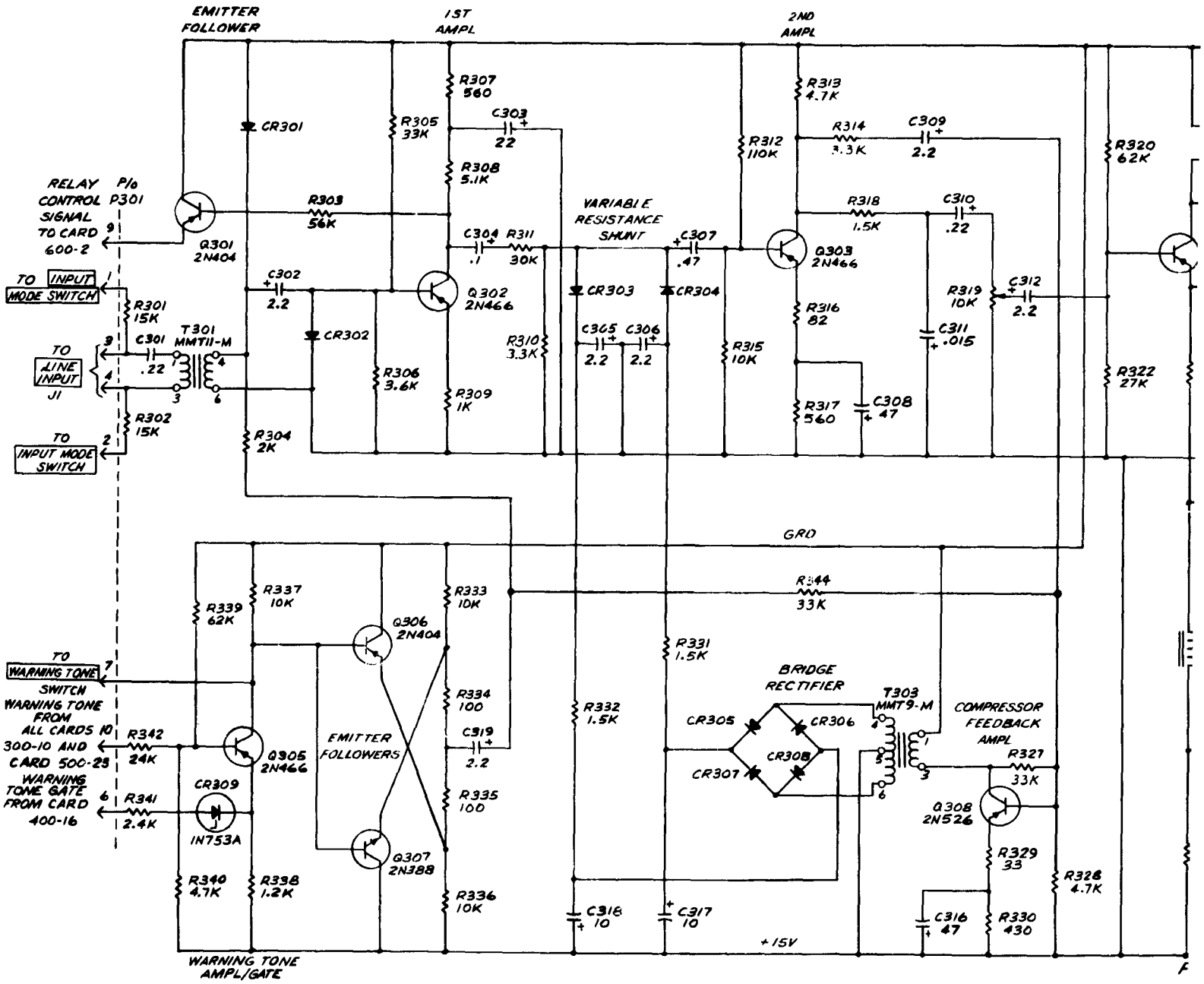
EMITTER FOLLOWER
1ST AMPL
2ND AMPL
RELAY CONTROL SIGNAL TO CARD 600-2
P/o P301
TO INPUT MODE SWITCH
TO LINE INPUT J1
TO INPUT MODE SWITCH
CR301
R301 15K
R302 15K
C301 .22
T301 MMT11-M
Q301 2N404
R303 56K
C302 2.2
CR302
R304 2K
R305 33K
R306 3.6K
R307 560
C303 22
R308 5.1K
R309 1K
Q302 2N466
C304 .1
R311 30K
R310 3.3K
VARIABLE RESISTANCE SHUNT
CR303
CR304
C305 2.2
C306 2.2
C307 .47
R312 110K
R313 4.7K
R314 3.3K
C309 2.2
R315 10K
R316 82
R317 560
C308 47
Q303 2N466
R318 1.5K
C310 .22
C311 .015
R319 10K
C312 2.2
R320 62K
R322 27K
GRD
R344 33K
R337 10K
R339 62K
Q306 2N404
R333 10K
TO WARNING TONE SWITCH
WARNING TONE FROM ALL CARDS 300-10 AND CARD 500-23
R342 24K
Q305 2N466
WARNING TONE GATE FROM CARD 400-16
R341 2.4K
CR309 1N753A
EMITTER FOLLOWERS
R334 100
C319 2.2
R335 100
Q307 2N388
R336 10K
R340 4.7K
R338 1.2K
WARNING TONE AMPL/GATE
R331 1.5K
R332 1.5K
C318 10
C317 10
+15V
BRIDGE RECTIFIER
CR305
CR306
CR307
CR308
T303 MMT9-M
COMPRESSOR FEEDBACK AMPL
R327 33K
Q308 2N526
R329 33
C316 47
R330 430
R328 4.7K

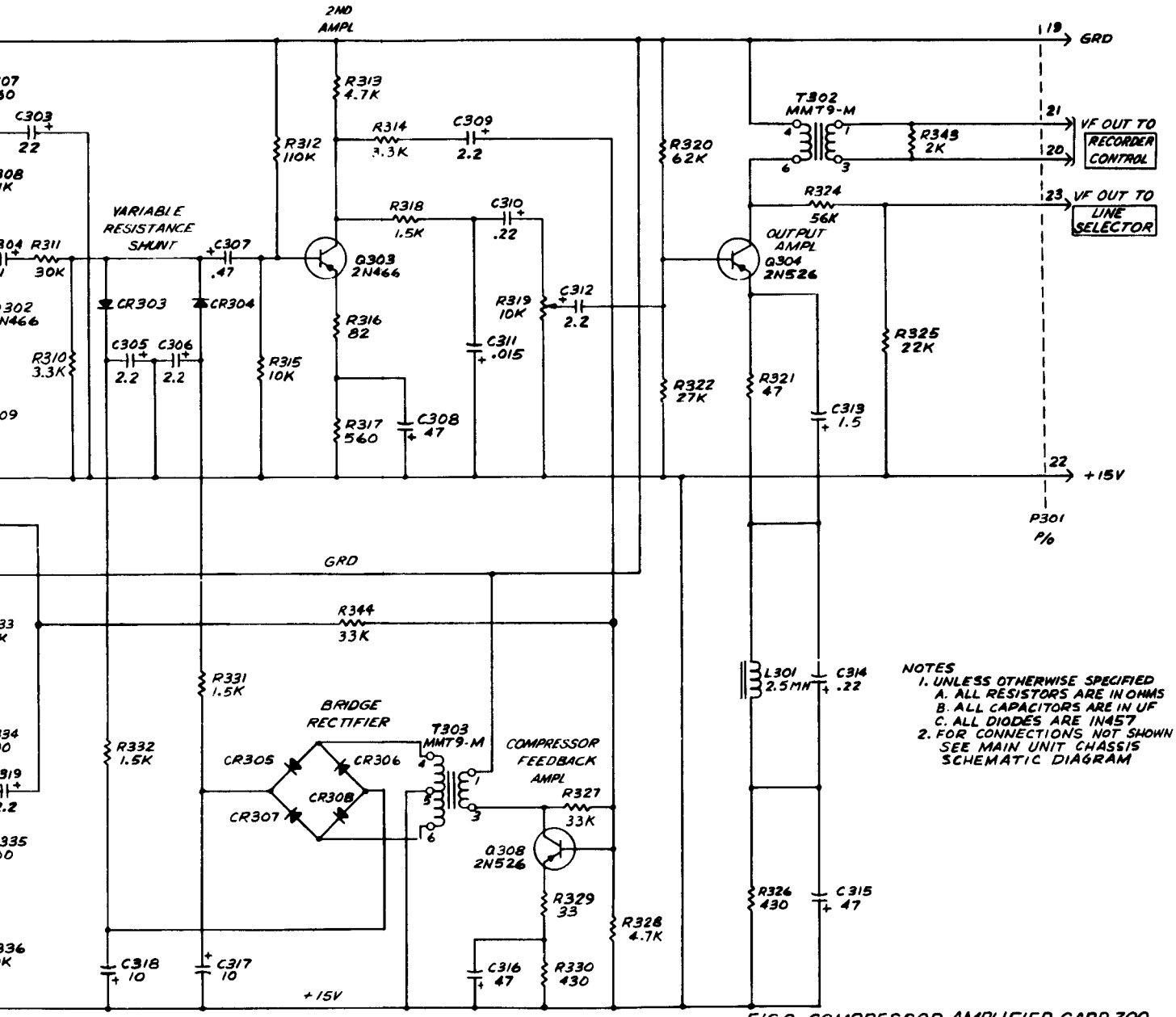

NOTES
1. UNLESS OTHERWISE SPECIFIED
A. ALL RESISTORS ARE IN OHMS
B. ALL CAPACITORS ARE IN UF
C. ALL DIODES ARE IN457
2. FOR CONNECTIONS NOT SHOWN SEE MAIN UNIT CHASSIS SCHEMATIC DIAGRAM

FIG 9 COMPRESSOR AMPLIFIER, CARD 300, SCHEMATIC DIAGRAM

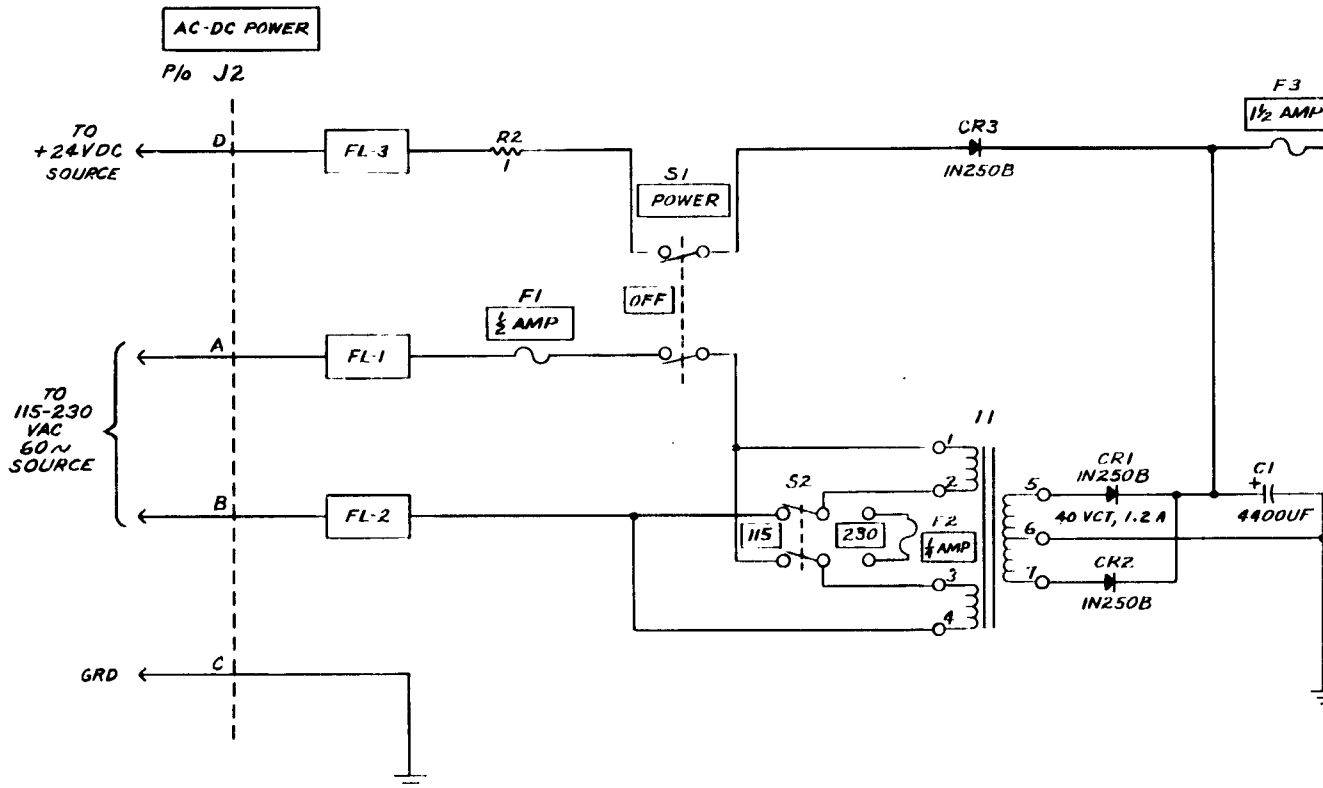
AC-DC POWER
P/o J2
TO
+24VDC
SOURCE
D
FL-3
R2
1
S1
POWER
CR3
IN250B
F3
1½ AMP
OFF
F1
½ AMP
A
FL-1
TO
115-230
VAC
60~
SOURCE
B
FL-2
T1
S2
115
230
T2
½ AMP
CR1
IN250B
40 VCT, 1.2 A
CR2
IN250B
C1
4400UF
GRD
C

[redacted]

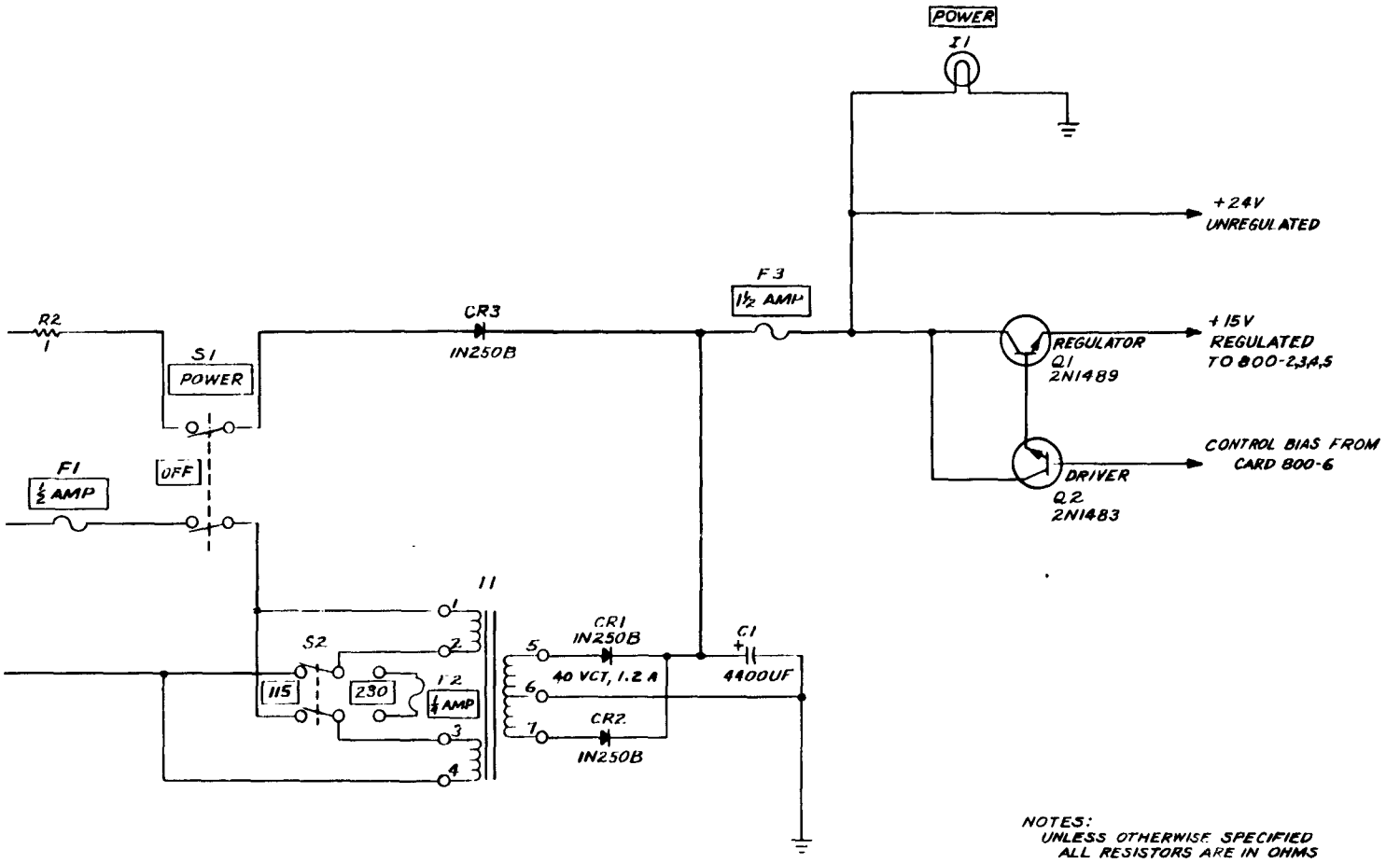

FIG. 10 MONITOR UNIT POWER SUPPLY
SCHEMATIC DIAGRAM

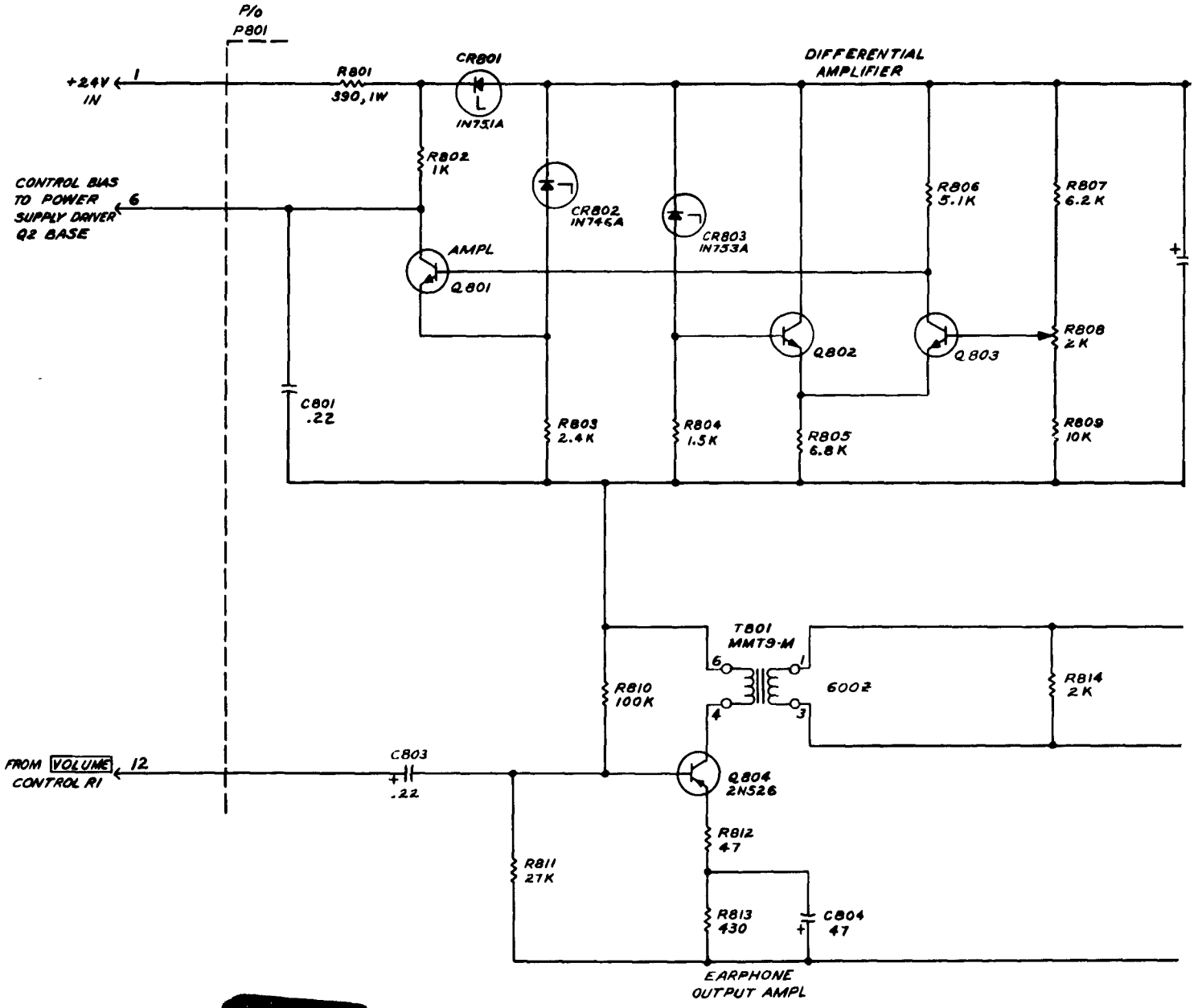
P/O
P801
+24V
IN
1
R801
390, 1W
CR801
1N751A
DIFFERENTIAL
AMPLIFIER
CONTROL BIAS
TO POWER
SUPPLY DRIVER
Q2 BASE
6
R802
1K
CR802
1N746A
CR803
1N753A
R806
5.1K
R807
6.2K
AMPL
Q801
Q802
Q803
R808
2K
C801
.22
R803
2.4K
R804
1.5K
R805
6.8K
R809
10K
T801
MMT9-M
R810
100K
6002
R814
2K
FROM VOLUME
CONTROL R1
12
C803
.22
Q804
2N526
R812
47
R811
27K
R813
430
C804
47
EARPHONE
OUTPUT AMPL

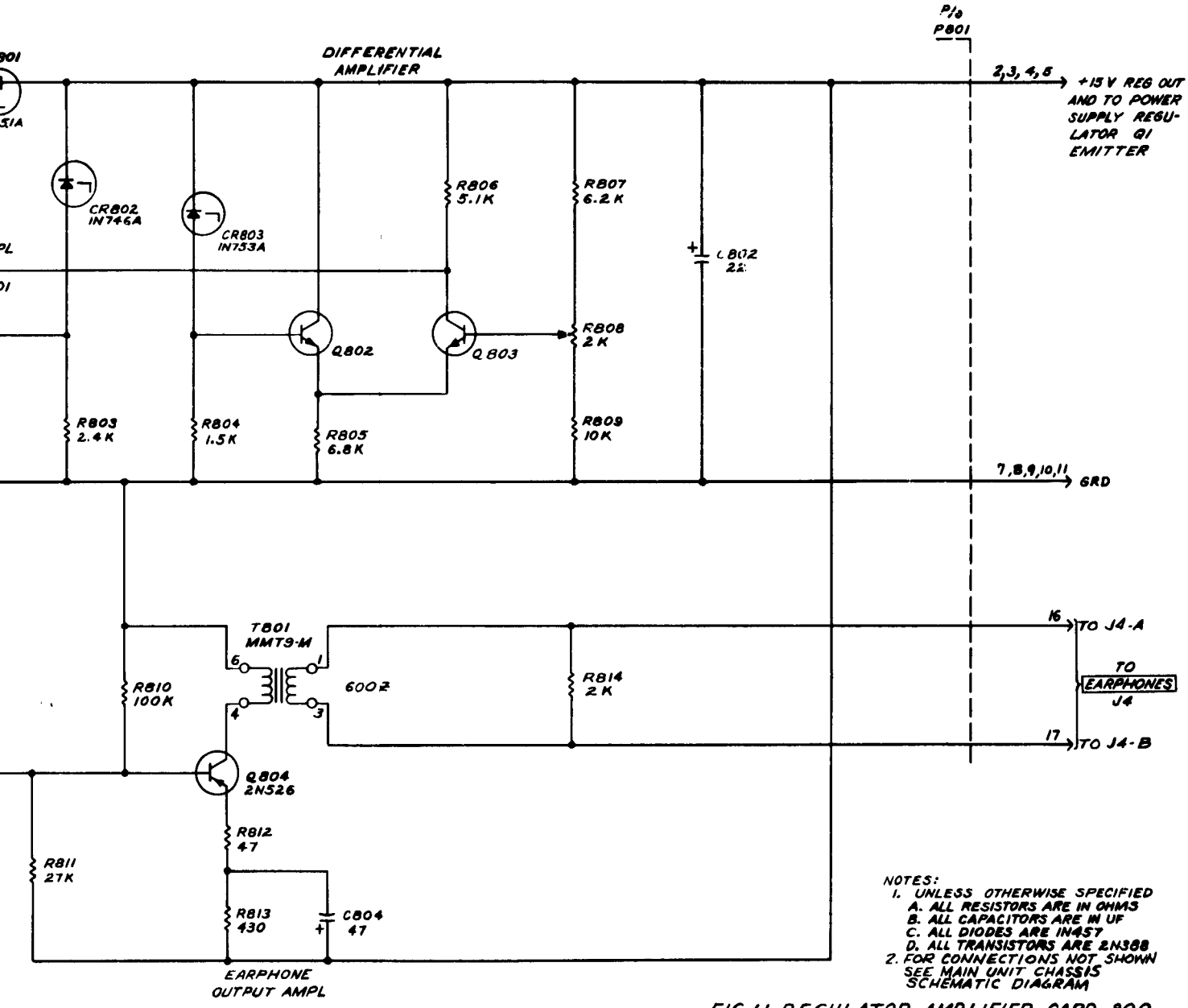

NOTES:
1. UNLESS OTHERWISE SPECIFIED
   A. ALL RESISTORS ARE IN OHMS
   B. ALL CAPACITORS ARE IN UF
   C. ALL DIODES ARE 1N457
   D. ALL TRANSISTORS ARE 2N388
2. FOR CONNECTIONS NOT SHOWN SEE MAIN UNIT CHASSIS SCHEMATIC DIAGRAM

FIG. 11 REGULATOR AMPLIFIER, CARD 800, SCHEMATIC DIAGRAM

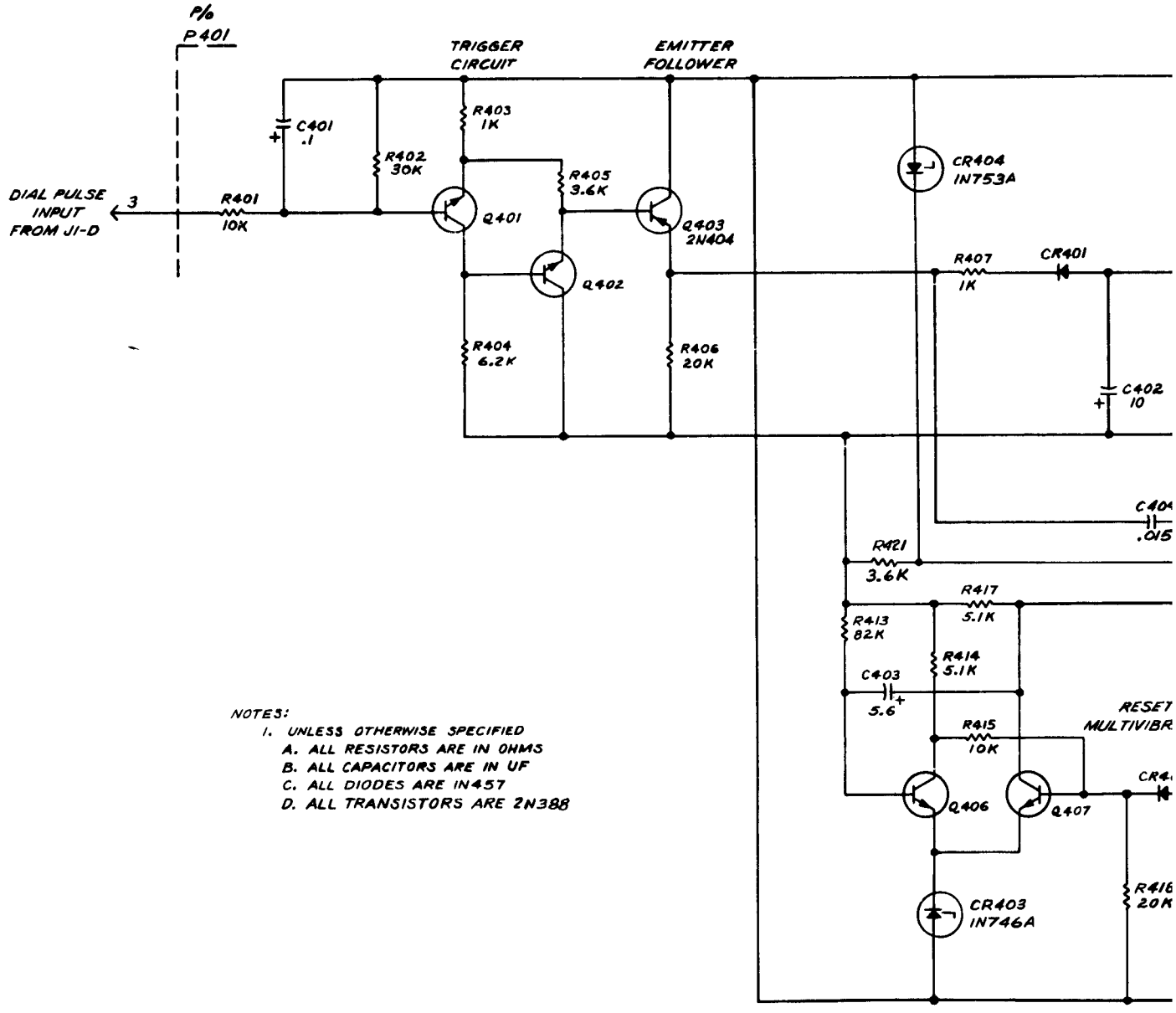
P/o
P401
TRIGGER
CIRCUIT
EMITTER
FOLLOWER
DIAL PULSE
INPUT
FROM J1-D
3
R401
10K
C401
.1
R402
30K
R403
1K
R405
3.6K
Q401
Q402
Q403
2N404
R404
6.2K
R406
20K
CR404
1N753A
R407
1K
CR401
C402
10
R421
3.6K
R417
5.1K
R413
82K
R414
5.1K
C403
5.6
R415
10K
Q406
Q407
CR403
1N746A
NOTES:
1. UNLESS OTHERWISE SPECIFIED
A. ALL RESISTORS ARE IN OHMS
B. ALL CAPACITORS ARE IN UF
C. ALL DIODES ARE IN457
D. ALL TRANSISTORS ARE 2N388

[redacted]

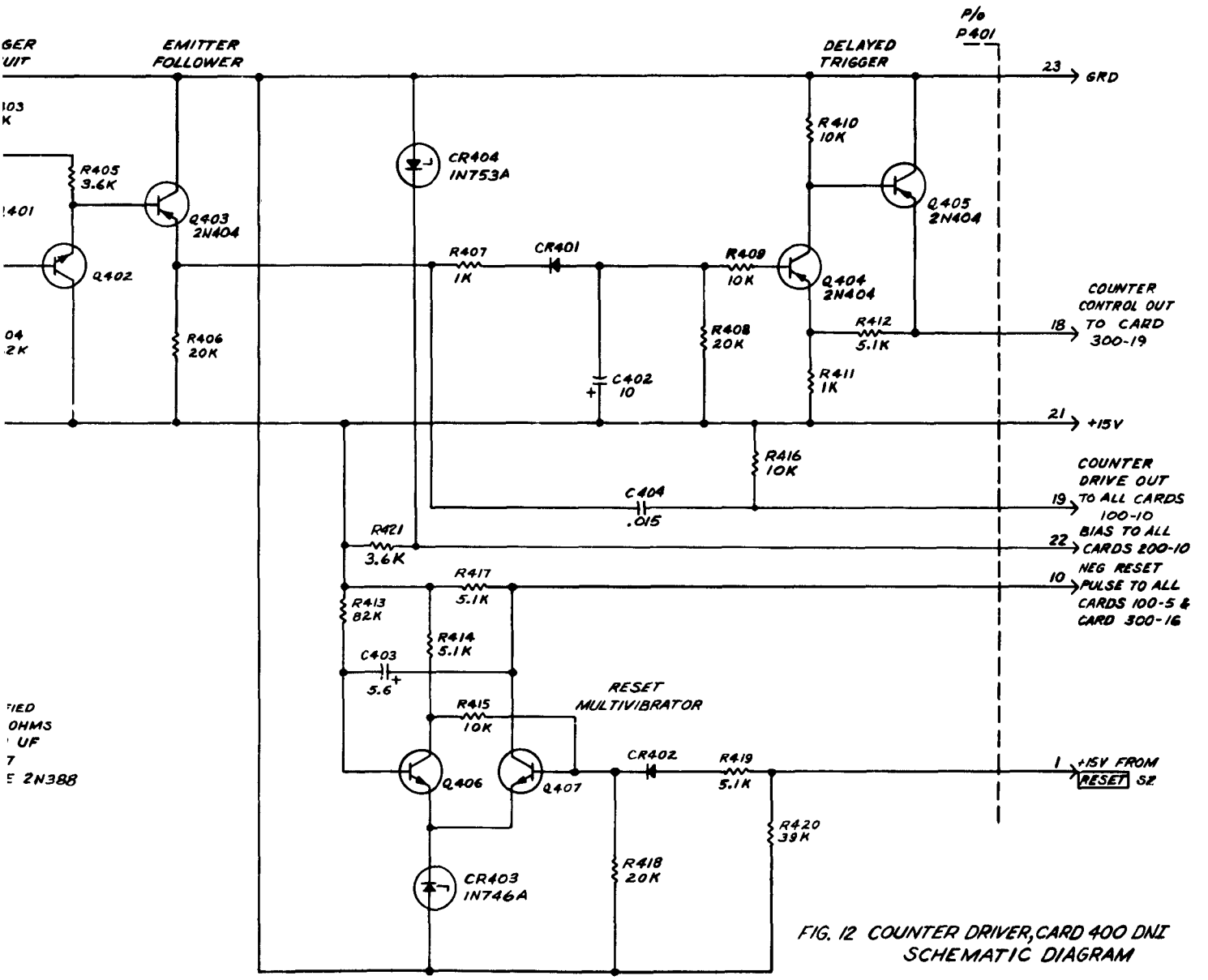

FIG. 12 COUNTER DRIVER, CARD 400 DNI SCHEMATIC DIAGRAM

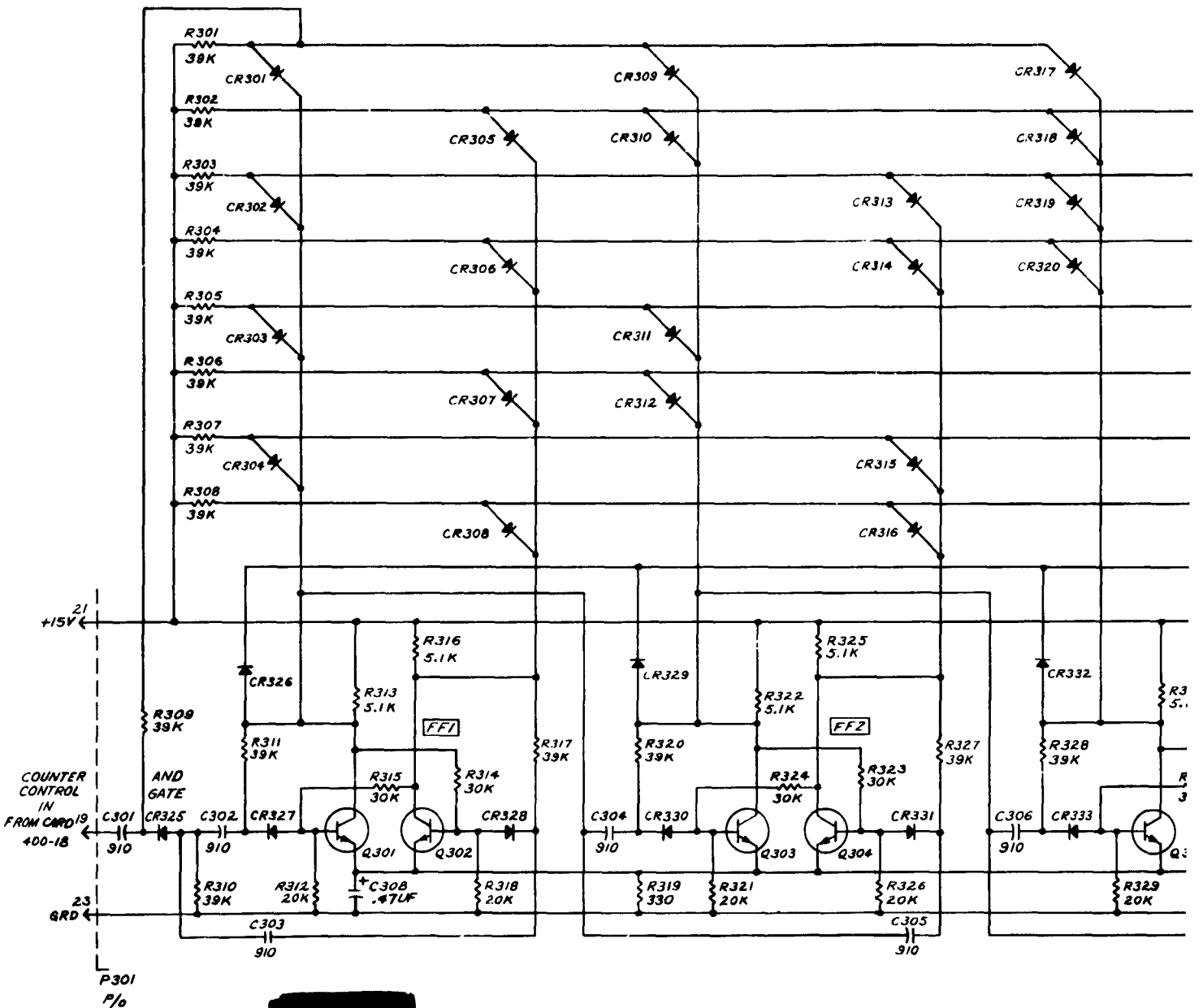
R301 39K
R302 39K
R303 39K
R304 39K
R305 39K
R306 39K
R307 39K
R308 39K
CR301
CR302
CR303
CR304
CR305
CR306
CR307
CR308
CR309
CR310
CR311
CR312
CR313
CR314
CR315
CR316
CR317
CR318
CR319
CR320
+15V 21
CR326
R309 39K
R311 39K
R313 5.1K
R316 5.1K
FF1
R315 30K
R314 30K
R317 39K
CR329
R320 39K
R322 5.1K
R325 5.1K
FF2
R324 30K
R323 30K
R327 39K
CR332
R328 39K
COUNTER CONTROL IN FROM CARD 400-18
19
AND GATE
C301 910
CR325
C302 910
CR327
Q301
Q302
CR328
C304 910
CR330
Q303
Q304
CR331
C306 910
CR333
R310 39K
R312 20K
C308 .47UF
R318 20K
R319 330
R321 20K
R326 20K
R329 20K
23 GRD
C303 910
C305 910
P301 P/o

[redacted]

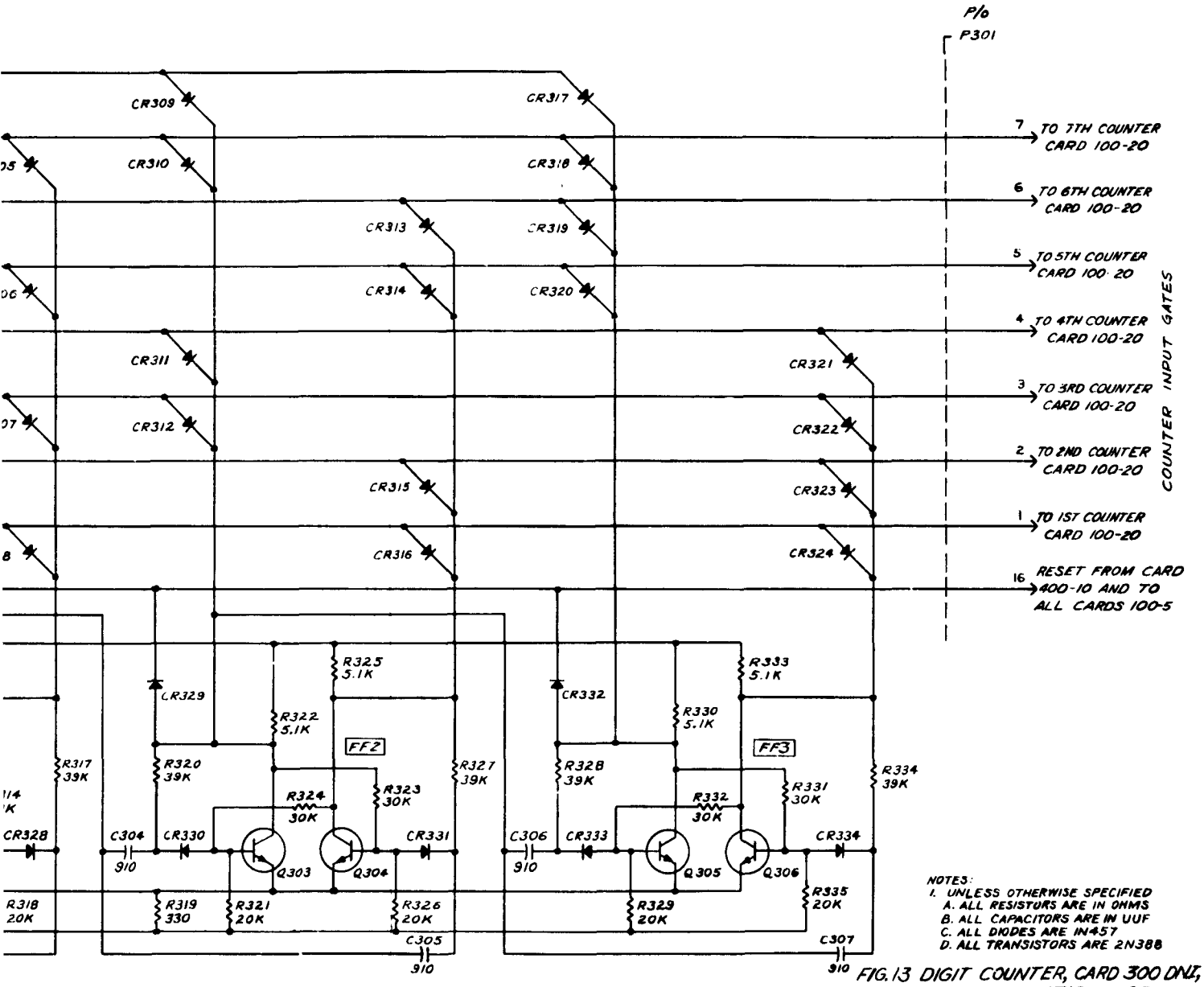

NOTES:
1. UNLESS OTHERWISE SPECIFIED
   A. ALL RESISTORS ARE IN OHMS
   B. ALL CAPACITORS ARE IN UUF
   C. ALL DIODES ARE IN457
   D. ALL TRANSISTORS ARE 2N388

FIG. 13 DIGIT COUNTER, CARD 300 DNI, SCHEMATIC DIAGRAM

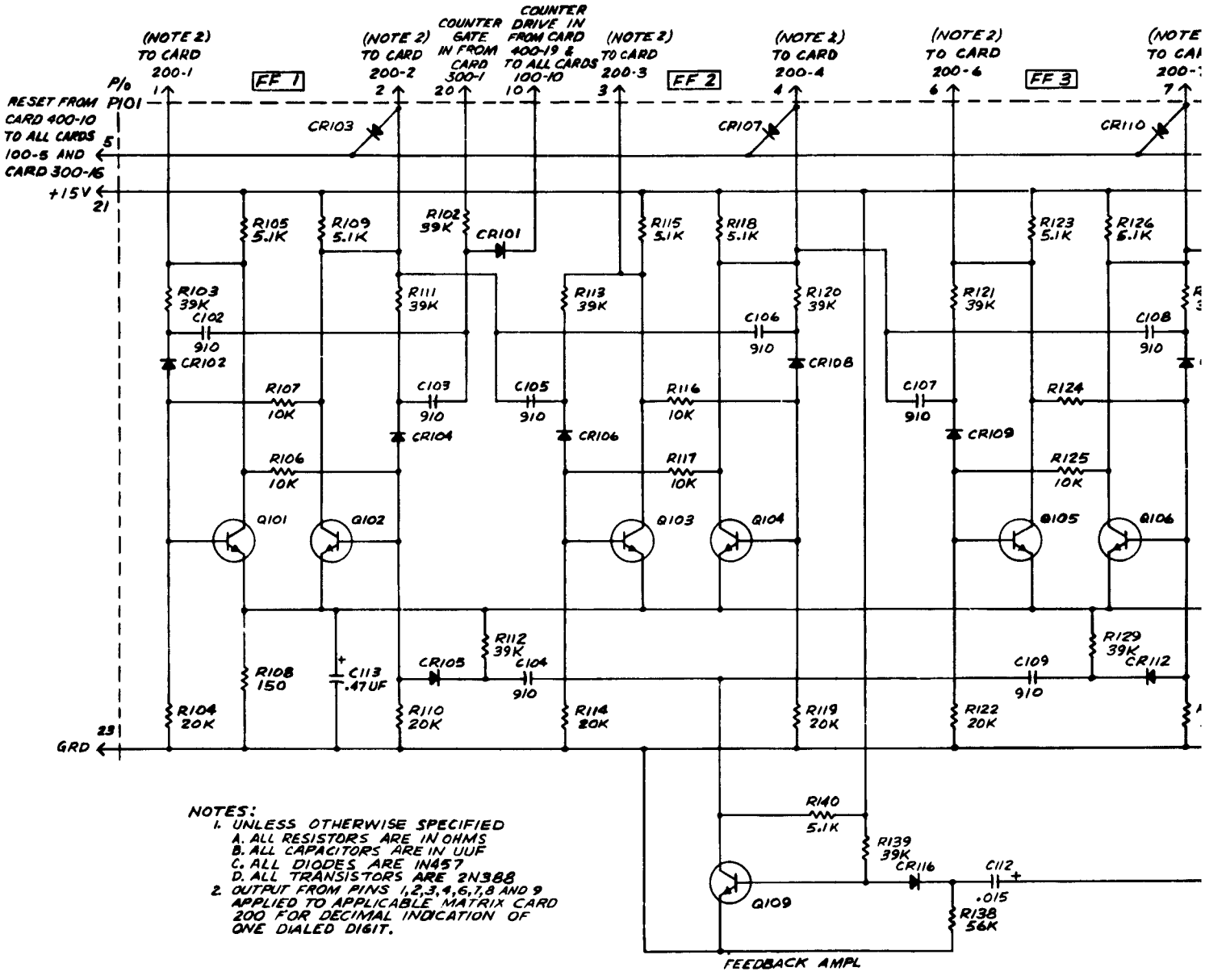

NOTES:
1. UNLESS OTHERWISE SPECIFIED
   A. ALL RESISTORS ARE IN OHMS
   B. ALL CAPACITORS ARE IN UUF
   C. ALL DIODES ARE IN457
   D. ALL TRANSISTORS ARE 2N388
2. OUTPUT FROM PINS 1,2,3,4,6,7,8 AND 9 APPLIED TO APPLICABLE MATRIX CARD 200 FOR DECIMAL INDICATION OF ONE DIALED DIGIT.

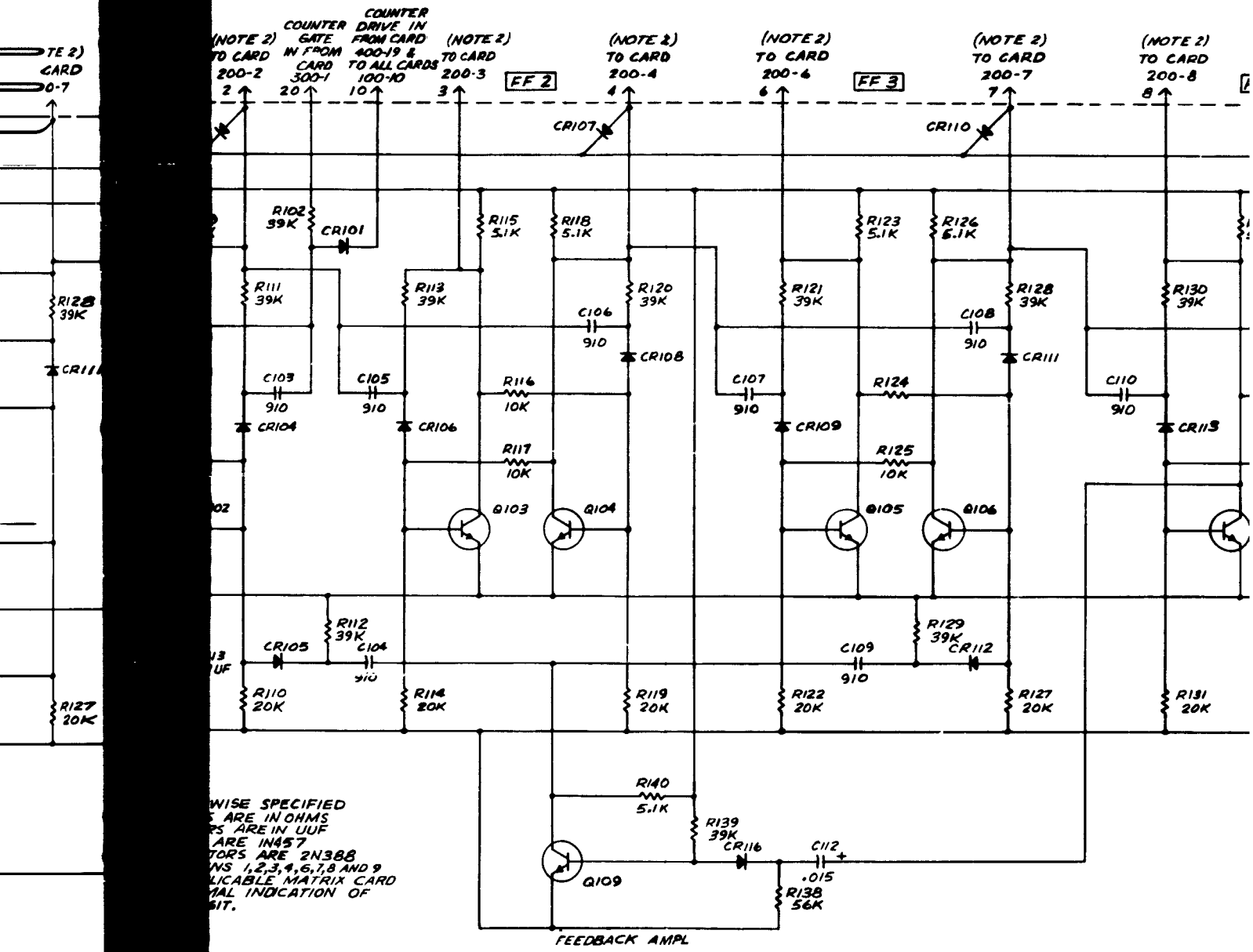

FIG. 14 COU
SCH

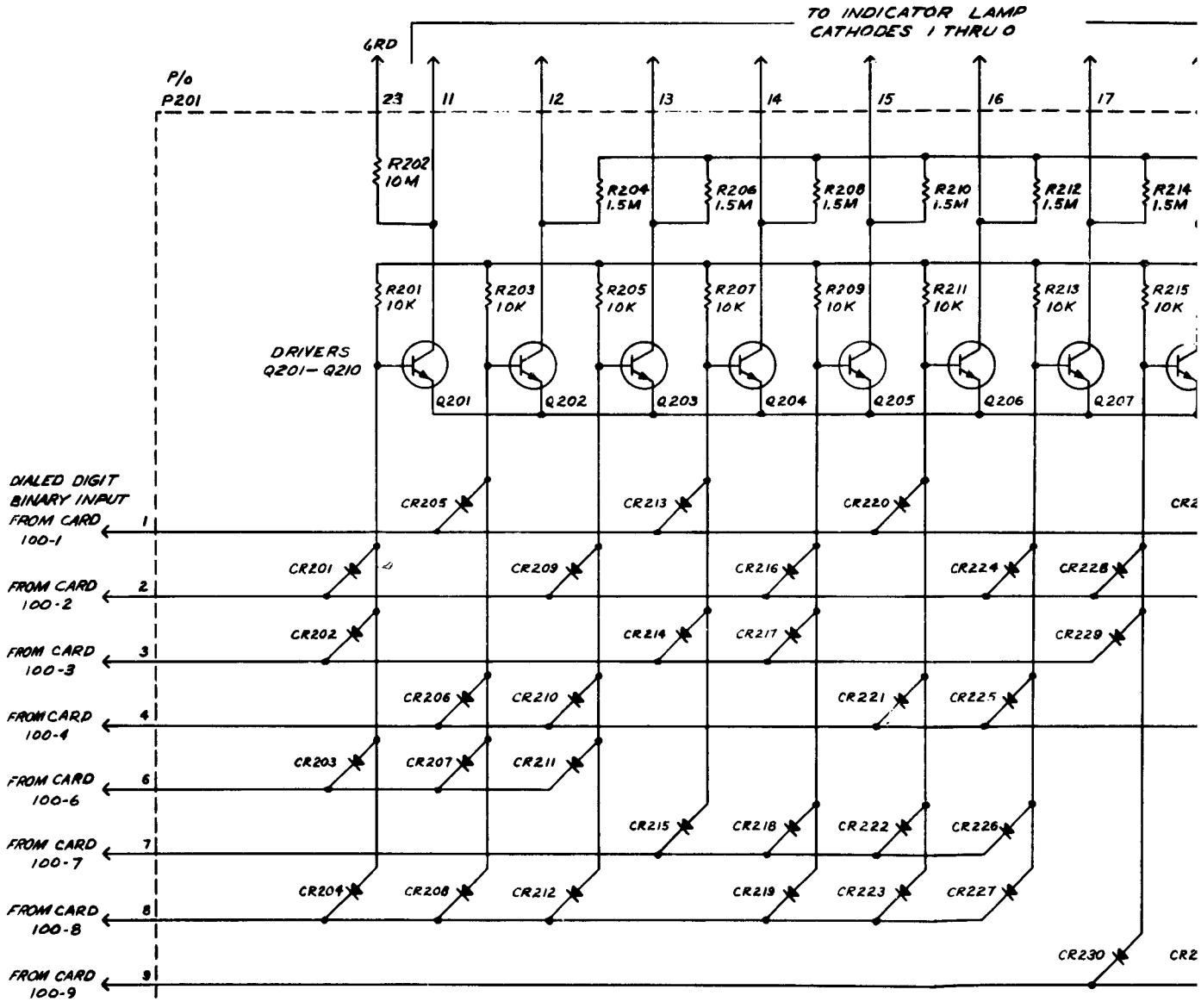
TO INDICATOR LAMP CATHODES 1 THRU 0
GRD
P/o P201
23
11
12
13
14
15
16
17
R202 10M
R204 1.5M
R206 1.5M
R208 1.5M
R210 1.5M
R212 1.5M
R214 1.5M
R201 10K
R203 10K
R205 10K
R207 10K
R209 10K
R211 10K
R213 10K
R215 10K
DRIVERS Q201–Q210
Q201
Q202
Q203
Q204
Q205
Q206
Q207
DIALED DIGIT BINARY INPUT
FROM CARD 100-1
FROM CARD 100-2
FROM CARD 100-3
FROM CARD 100-4
FROM CARD 100-6
FROM CARD 100-7
FROM CARD 100-8
FROM CARD 100-9
1
2
3
4
6
7
8
9
CR205
CR213
CR220
CR201
CR209
CR216
CR224
CR228
CR202
CR214
CR217
CR229
CR206
CR210
CR221
CR225
CR203
CR207
CR211
CR215
CR218
CR222
CR226
CR204
CR208
CR212
CR219
CR223
CR227
CR230

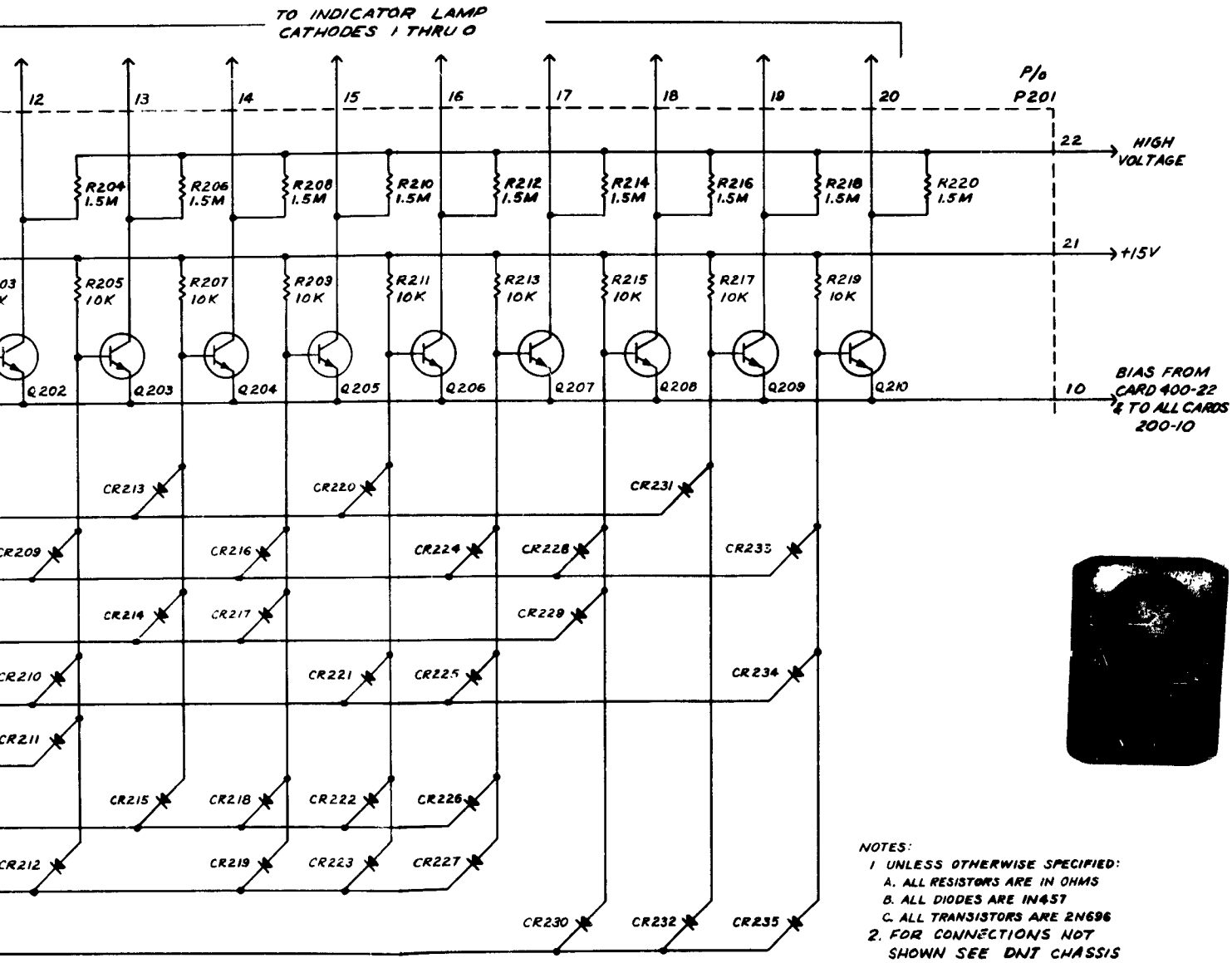

NOTES:
1 UNLESS OTHERWISE SPECIFIED:
A. ALL RESISTORS ARE IN OHMS
B. ALL DIODES ARE IN457
C. ALL TRANSISTORS ARE 2N696
2. FOR CONNECTIONS NOT SHOWN SEE DNI CHASSIS SCHEMATIC DIAGRAM

FIG.15 MATRIX, CARD 200 DNI, SCHEMATIC DIAGRAM

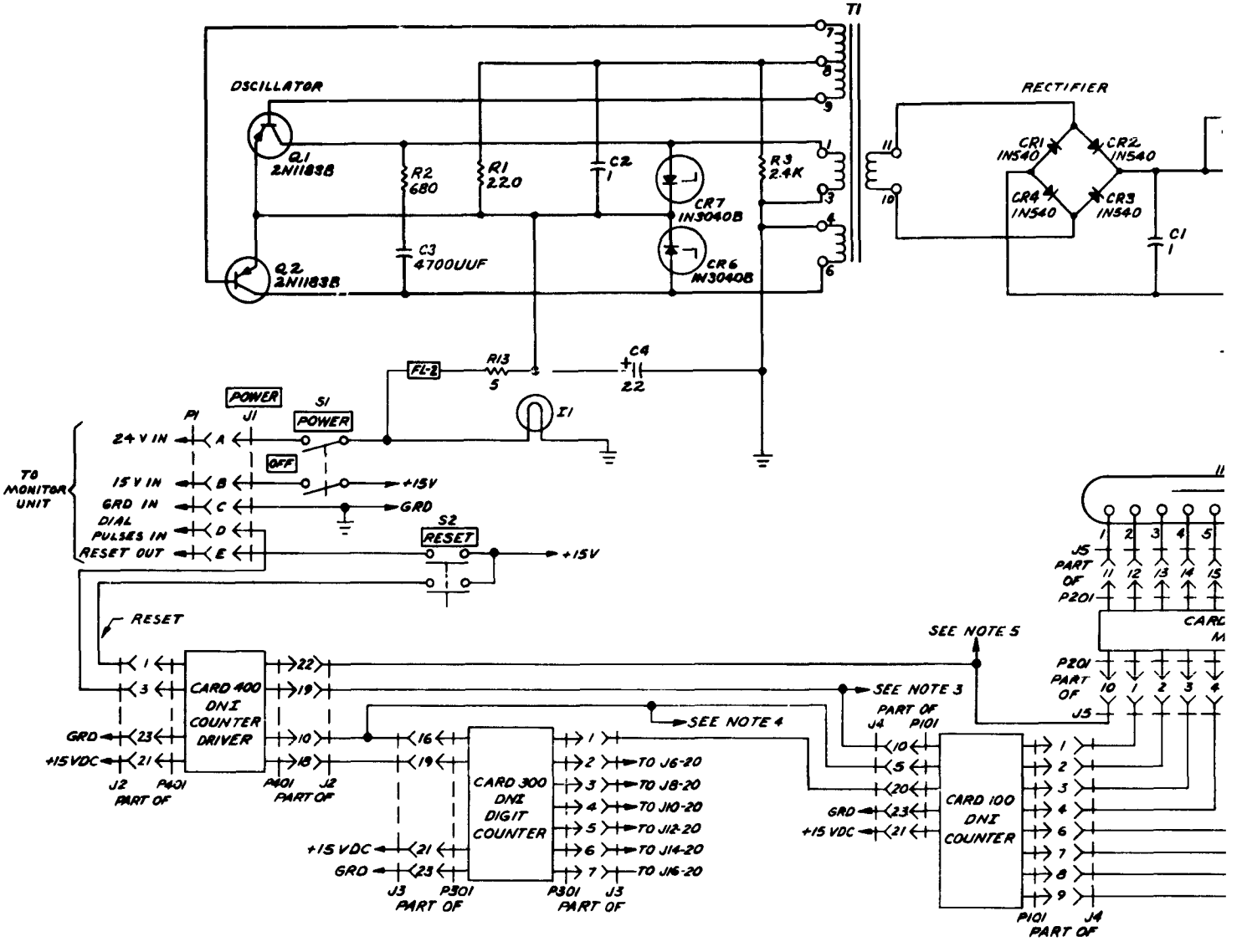
T1
OSCILLATOR
Q1 2N1183B
Q2 2N1183B
R2 680
R1 220
C2 1
C3 4700UUF
CR7 1N3040B
CR6 1N3040B
R3 2.4K
RECTIFIER
CR1 1N540
CR2 1N540
CR3 1N540
CR4 1N540
C1 1
FL-2
R13 5
C4 22
I1
POWER
S1
POWER
OFF
P1
J1
24 V IN
15 V IN
GRD IN
DIAL PULSES IN
RESET OUT
TO MONITOR UNIT
+15V
GRD
S2
RESET
+15V
RESET
CARD 400 DNI COUNTER DRIVER
GRD
+15 VDC
J2 PART OF
P401
P401 PART OF
J2
CARD 300 DNI DIGIT COUNTER
+15 VDC
GRD
J3 PART OF
P301
P301 PART OF
J3
TO J6-20
TO J8-20
TO J10-20
TO J12-20
TO J14-20
TO J16-20
SEE NOTE 5
SEE NOTE 3
SEE NOTE 4
J4 PART OF
P101
CARD 100 DNI COUNTER
GRD
+15 VDC
P101 PART OF
J4
J5 PART OF P201
P201 PART OF J5

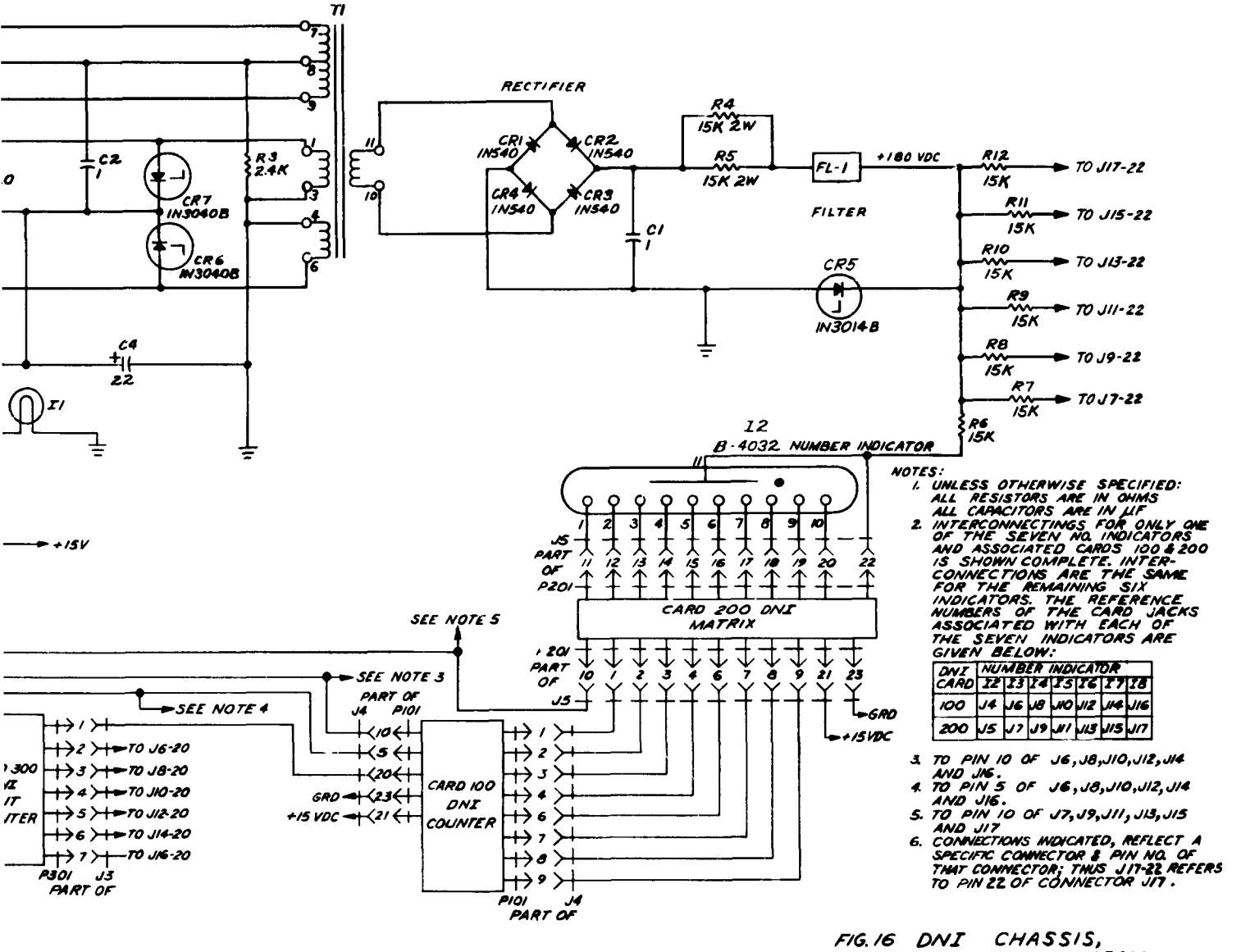

NOTES:

1. UNLESS OTHERWISE SPECIFIED: ALL RESISTORS ARE IN OHMS ALL CAPACITORS ARE IN µF
2. INTERCONNECTINGS FOR ONLY ONE OF THE SEVEN NO. INDICATORS AND ASSOCIATED CARDS 100 & 200 IS SHOWN COMPLETE. INTER-CONNECTIONS ARE THE SAME FOR THE REMAINING SIX INDICATORS. THE REFERENCE NUMBERS OF THE CARD JACKS ASSOCIATED WITH EACH OF THE SEVEN INDICATORS ARE GIVEN BELOW:

DNI CARD	NUMBER INDICATOR						
	I2	I3	I4	I5	I6	I7	I8
100	J4	J6	J8	J10	J12	J14	J16
200	J5	J7	J9	J11	J13	J15	J17

3. TO PIN 10 OF J6, J8, J10, J12, J14 AND J16.
4. TO PIN 5 OF J6, J8, J10, J12, J14 AND J16.
5. TO PIN 10 OF J7, J9, J11, J13, J15 AND J17
6. CONNECTIONS INDICATED, REFLECT A SPECIFIC CONNECTOR & PIN NO. OF THAT CONNECTOR; THUS J17-22 REFERS TO PIN 22 OF CONNECTOR J17.

FIG. 16 DNI CHASSIS, SCHEMATIC DIAGRAM

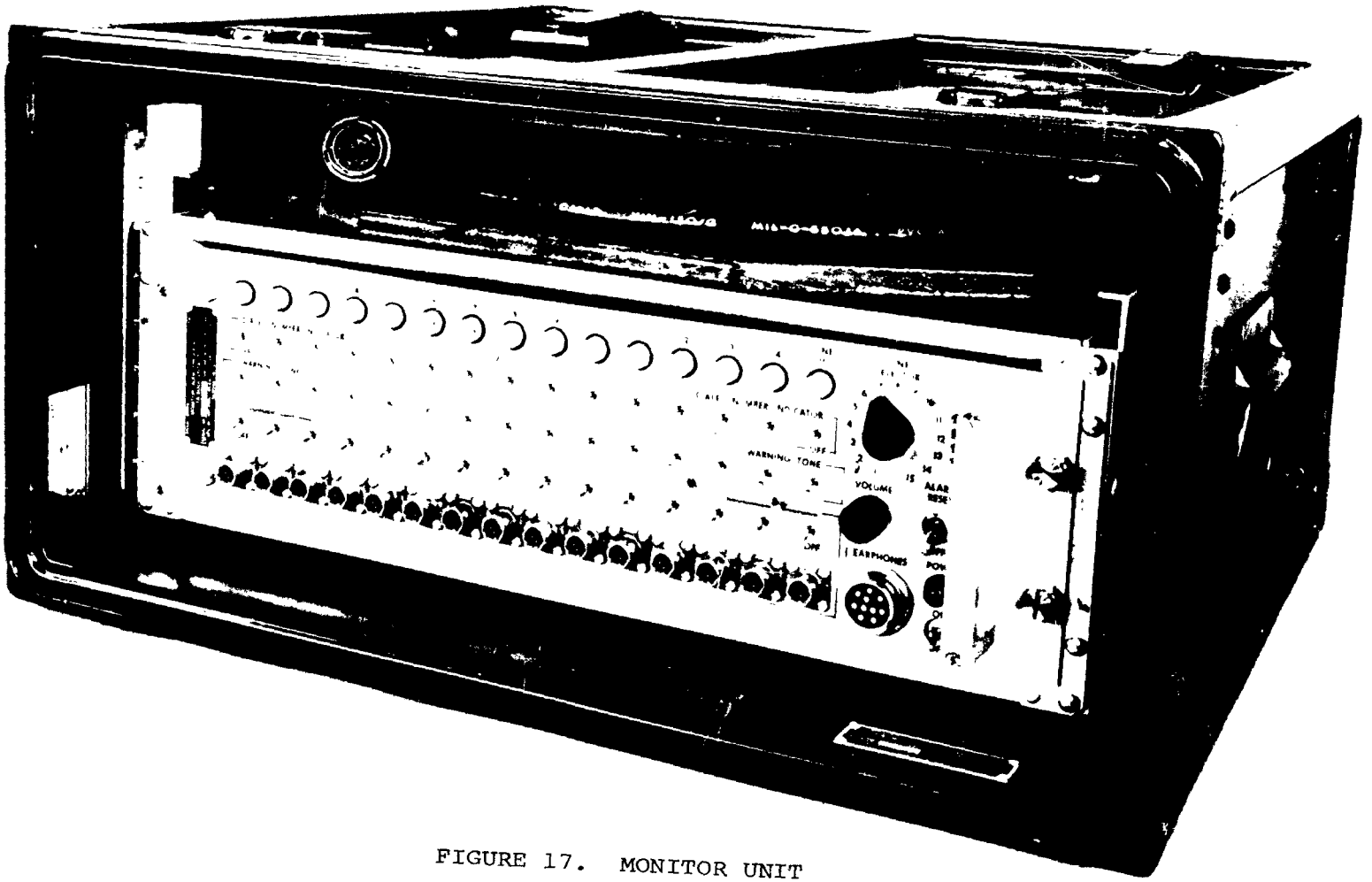

FIGURE 17. MONITOR UNIT

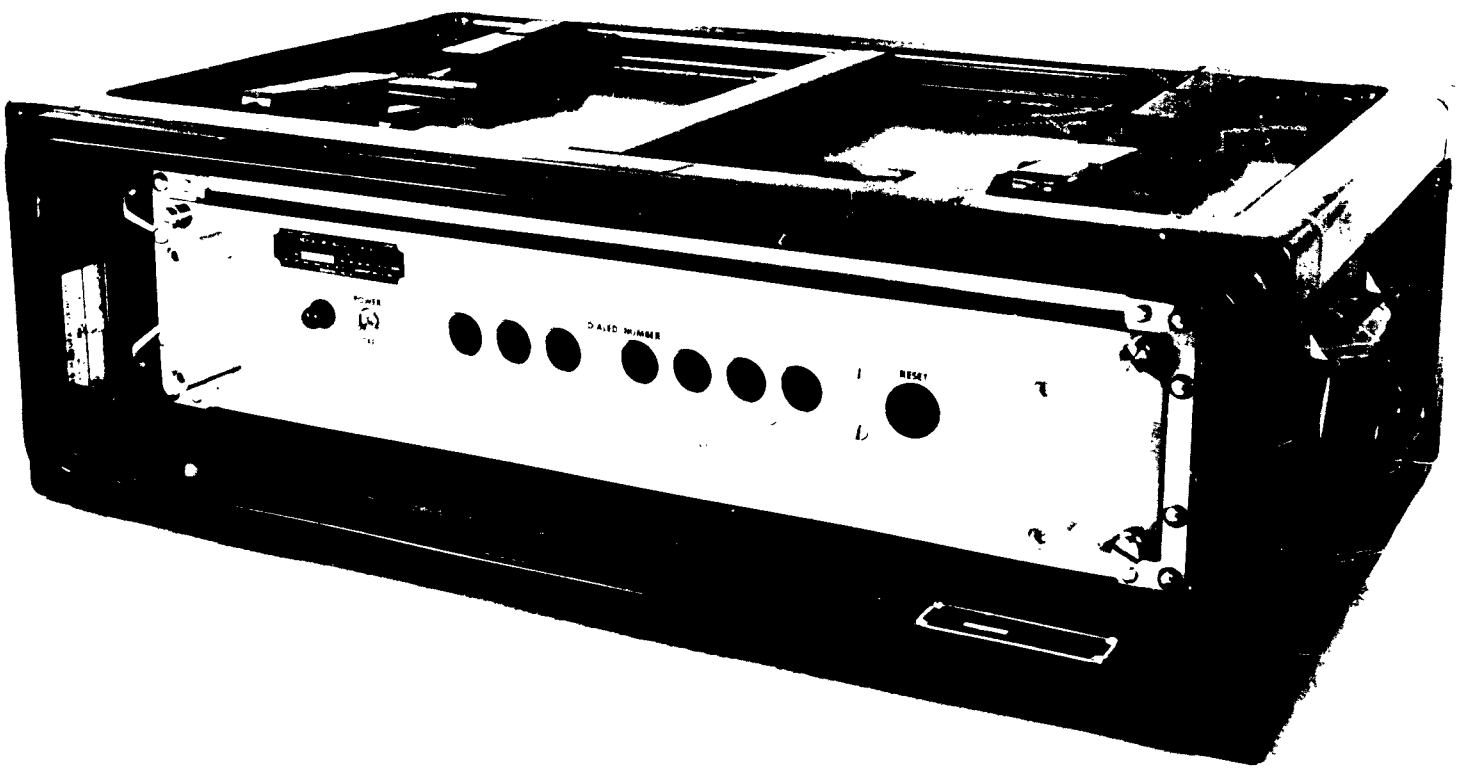

FIGURE 18. DIALED NUMBER INDICATOR

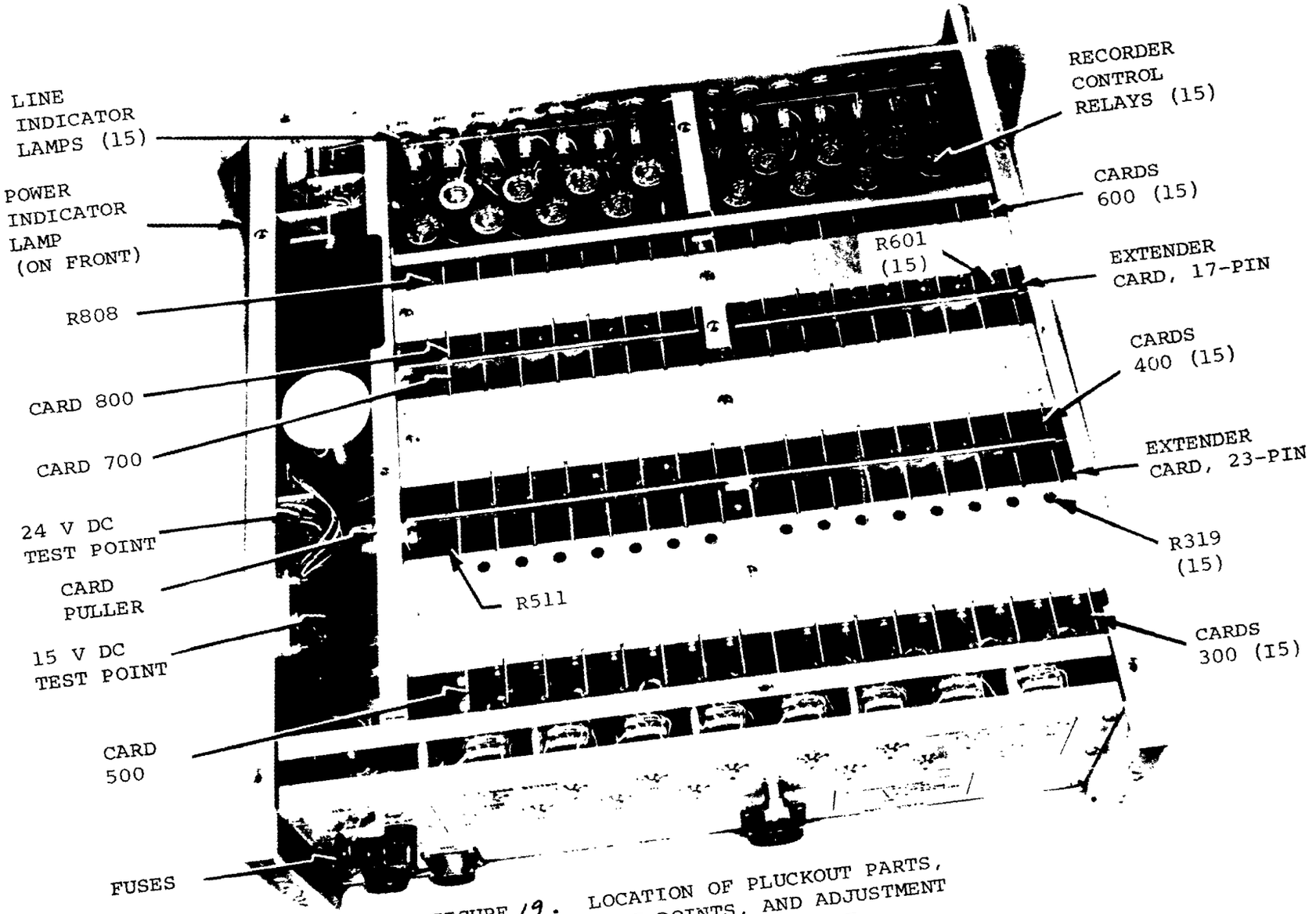

FIGURE 19. LOCATION OF PLUCKOUT PARTS, TEST POINTS, AND ADJUSTMENT POINTS, MONITOR UNIT.

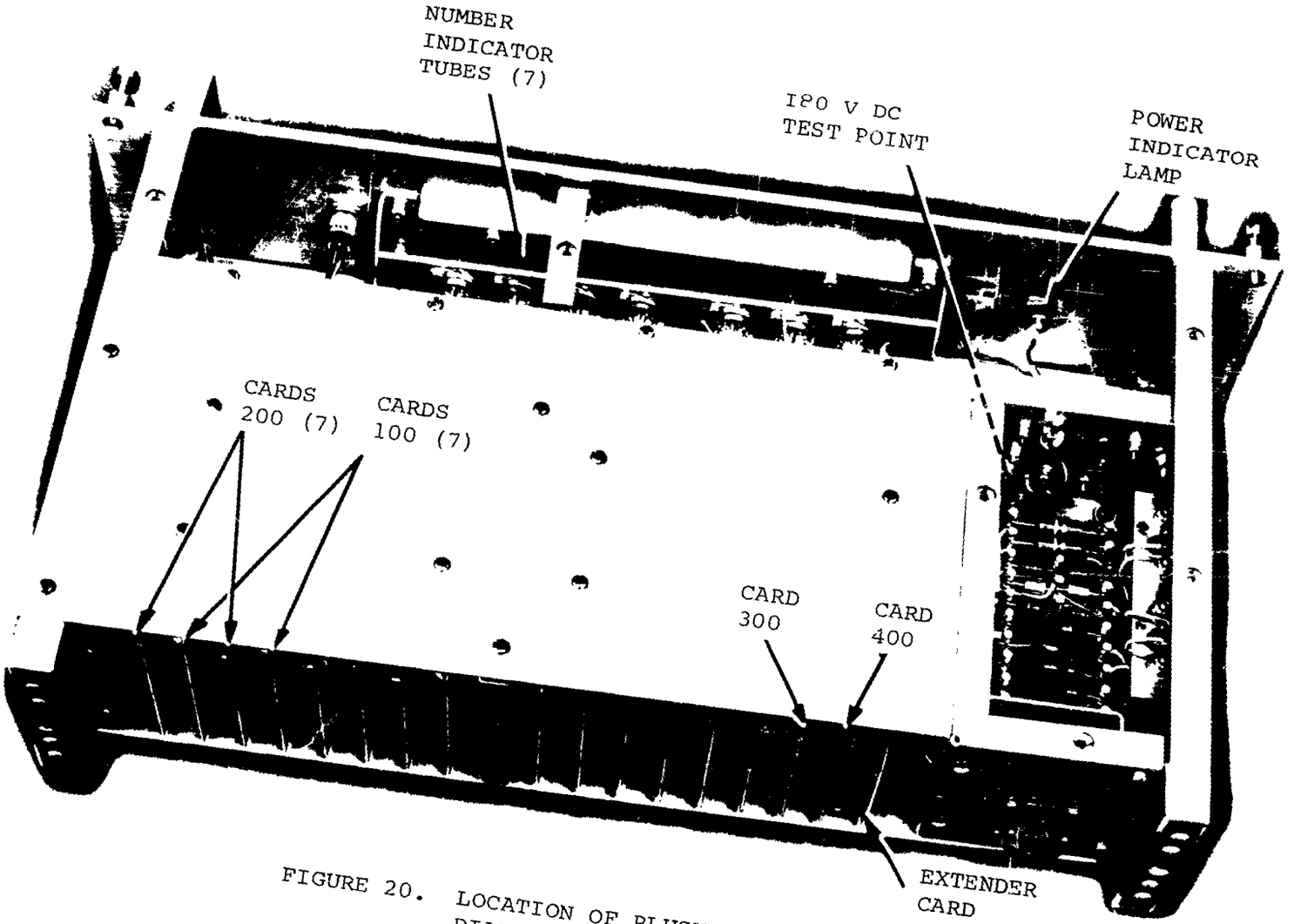

FIGURE 20. LOCATION OF PLUCKOUT PARTS, DIALED NUMBER INDICATOR.

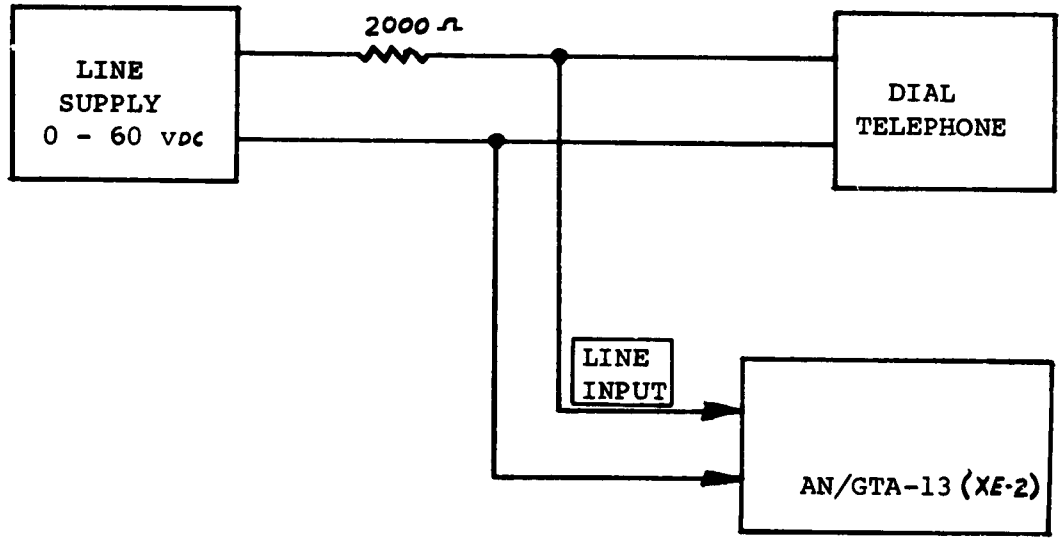

FIGURE 21. TEST ASSEMBLY FOR SIMULATING
CB OR DIAL TELEPHONE LINE

FIGURE 22. COMPRESSOR AMPLIFIER FREQUENCY RESPONSE

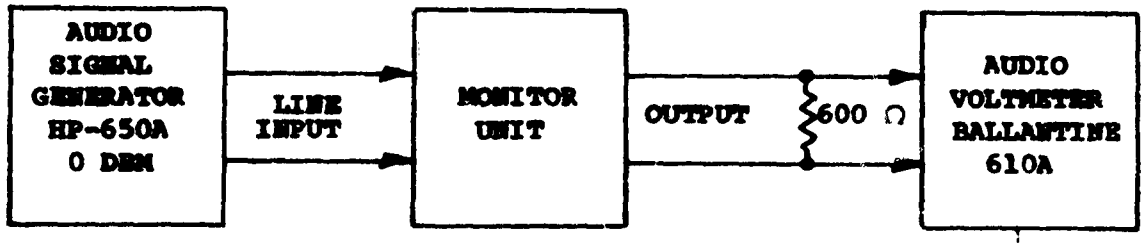

VOLTMETER READS OUTPUT 1

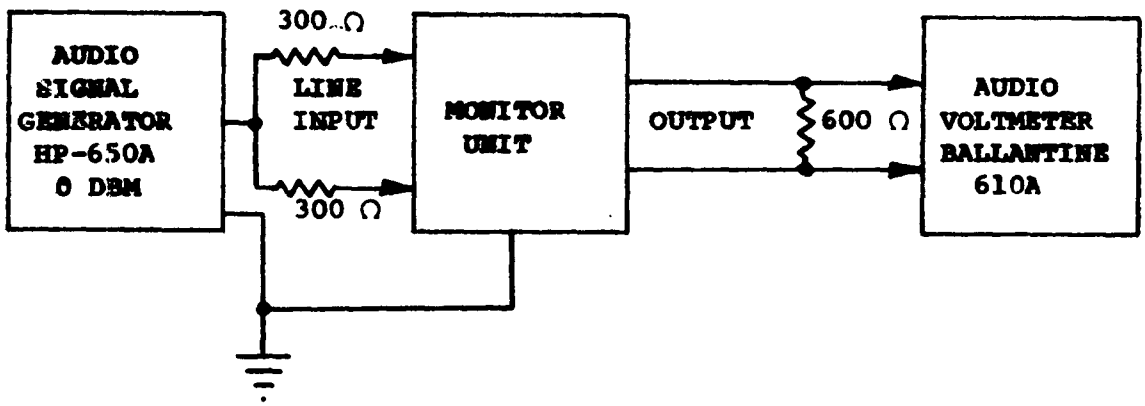

VOLTMETER READS OUTPUT 2

FIGURE 23. TEST SETUP FOR MEASURING LONGITUDINAL BALANCE

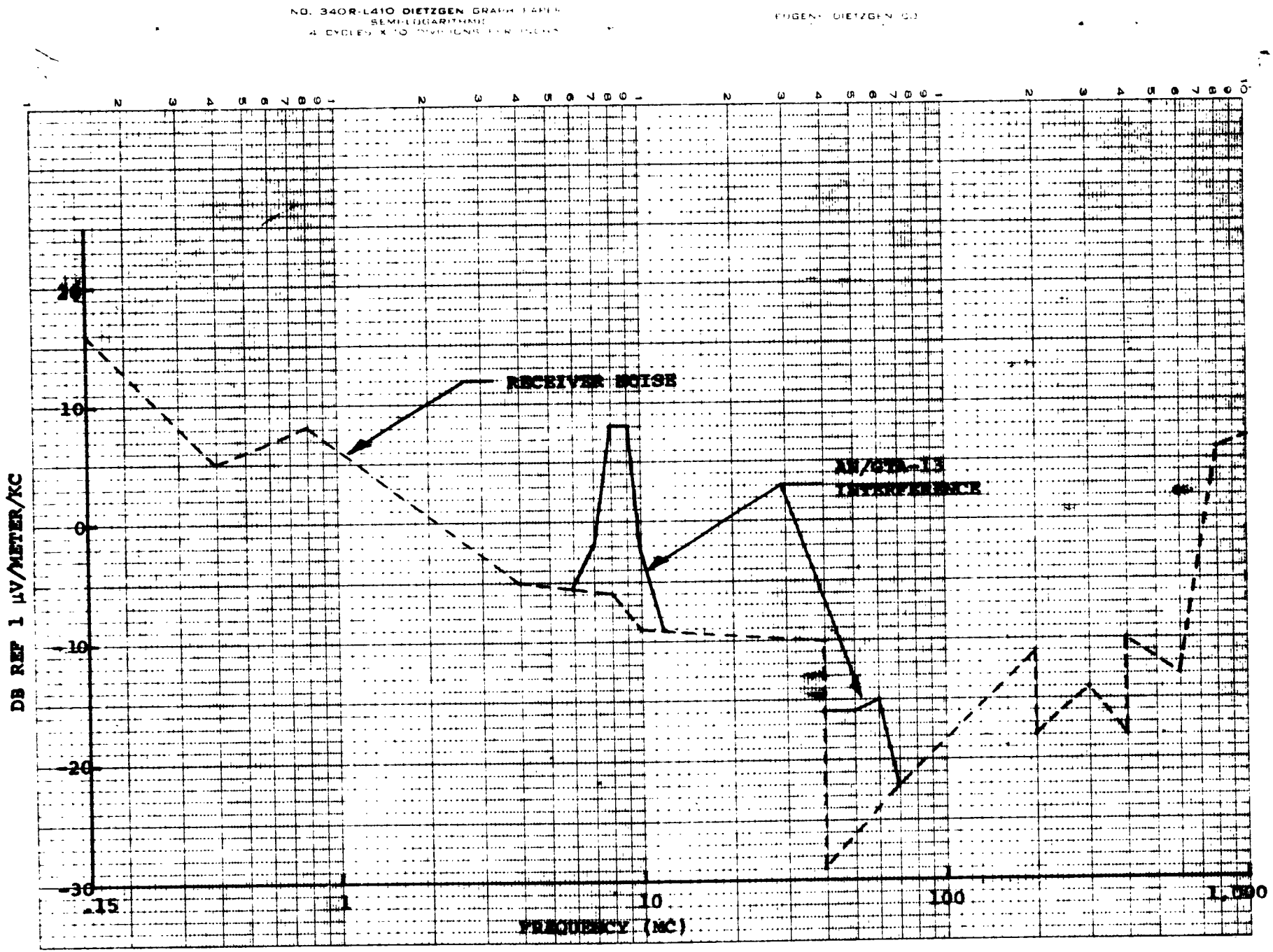

FIGURE 24. RADIATED INTERFERENCE

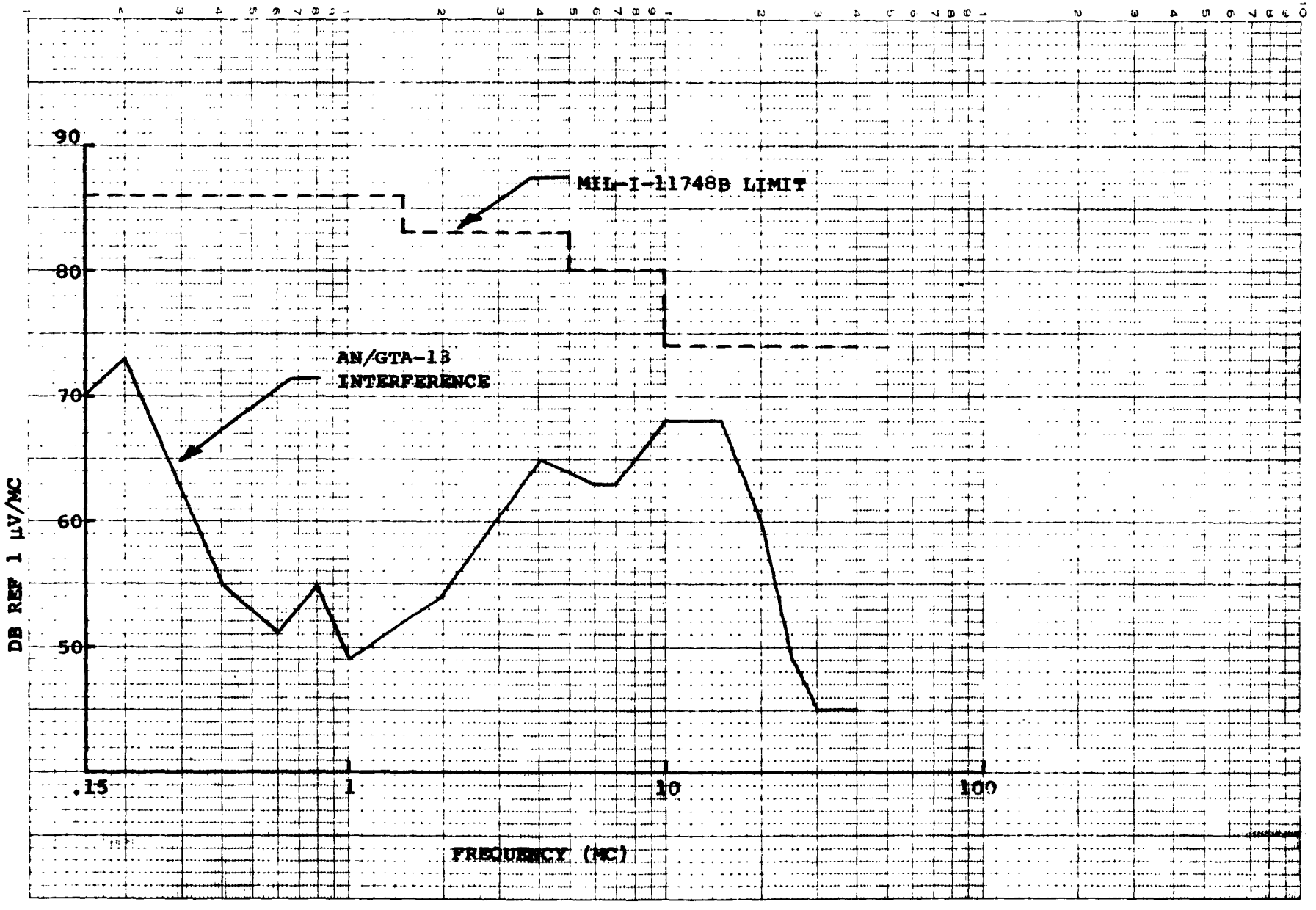

FIGURE 25. CONDUCTED INTERFERENCE

FINAL REPORT
MONITORING SET, TELEPHONE AN/GTA-13 (XE-2)
SERVICE TEST MODEL
DISTRIBUTION LIST

	No. of Copies
OASD (R and E) Room 3E1065 The Pentagon Washington 25, D. C. ATTN: Tech Library	1
Commanding General US Army Electronics Command Washington, D. C.	1
Commanding General US Army Research and Development Activity Fort Huachuca, Arizona	1
Director US Naval Research Laboratory ATTN: Code 2027 Washington 25, D. C.	1
RADC (RAALD) Griffiss AFB, N. Y. ATTN: Documents Library	1
Commander Armed Services Tech Information Agency Arlington Hall Station Arlington 12, Virginia	10
Chief US Army Security Agency ATTN: IADEV Arlington Hall Station Arlington, Va.	25
US Army Security Technical Representative US Army Electronics Research and Development Laboratory Evans Area Ft Monmouth, N. J.	1
Commanding Officer US Army Electronics Research and Development Laboratory Ft Monmouth, N.J.	
ATTN: SELRA/SL-TNR (Tech Info Div)	3
-NPS (Ch, Switching Br)	4
-LNR (US Marine Corps LnO)	1
-LNF (USCONARC LnO)	1

AD_____Accession No._____

National Scientific Laboratories, Inc., Washington 6, D. C.
MONITORING SET, TELEPHONE, AN/GTA-13 (XE-2)
Francis E. Stimson

Final Report, July 1, 1961 to March 15, 1963, 128 pages and illustrations. Signal Corps Contract DA36-039-sc-88911, DA Project No. 3B21-09-001. Report UNCLASSIFIED.

Design of the two service test models of the Monitoring Set, Telephone AN/GTA-13 (XE-2) was based on the engineering test models which underwent performance tests and evaluation at USAERDL, Fort Monmouth, New Jersey. Few changes in the original design were necessary.

The AN/GTA-13 monitors any voice frequency land line by means of a two wire connector to a standard switchboard. As many as fifteen lines may be monitored simultaneously. Provision is made for automatic tape recorder control, and a seven digit dialed number can be recorded and displayed. Electrical circuits are transistorized. A battery or ac power source may be used. A reliability study made on the tentative breadboard design resulted in a predicted reliability which more than meets specifications.

Details of basic system requirements, the reliability study, circuit design and development, and mechanical design features are described and discussed in the following report. Typical electrical performance data also are included.

UNCLASSIFIED

1. Monitoring Set, Telephone, AN/GTA-13 (XE-2)
2. Signal Corps Contract No. DA36-039-sc-88911

AD_____Accession No._____

National Scientific Laboratories, Inc., Washington 6, D. C.
MONITORING SET, TELEPHONE, AN/GTA-13 (XE-2)
Francis E. Stimson

Final Report, July 1, 1961 to March 15, 1963, 128 pages and illustrations. Signal Corps Contract DA36-039-sc-88911, DA Project No. 3B21-09-001. Report UNCLASSIFIED.

Design of the two service test models of the Monitoring Set, Telephone AN/GTA-13 (XE-2) was based on the engineering test models which underwent performance tests and evaluation at USAERDL, Fort Monmouth, New Jersey. Few changes in the original design were necessary.

The AN/GTA-13 monitors any voice frequency land line by means of a two wire connection to a standard switchboard. As many as fifteen lines may be monitored simultaneously. Provision is made for automatic tape recorder control, and a seven digit dialed number can be recorded and displayed. Electrical circuits are transistorized. A battery or ac power source may be used. A reliability study made on the tentative breadboard design resulted in a predicted reliability which more than meets specifications.

Details of basic system requirements, the reliability study, circuit design and development, and mechanical design features are described and discussed in the following report. Typical electrical performance data also are included.

UNCLASSIFIED

1. Monitoring Set, Telephone, AN/GTA-13 (XE-2)
2. Signal Corps Contract No. DA36-039-sc-88911

AD_____Accession No._____

National Scientific Laboratories, Inc., Washington 6, D. C.
MONITORING SET, TELEPHONE, AN/GTA-13 (XE-2)
Francis E. Stimson

Final Report, July 1, 1961 to March 15, 1963, 128 pages and illustrations. Signal Corps Contract DA36-039-sc-88911, DA Project No. 3B21-09-C01. Report UNCLASSIFIED.

Design of the two service test models of the Monitoring Set, Telephone AN/GTA-13 (XE-2) was based on the engineering test models which underwent performance tests and evaluation at USAERDL, Fort Monmouth, New Jersey. Few changes in the original design were necessary.

The AN/GTA-13 monitors any voice frequency land line by means of a two wire connection to a standard switchboard. As many as fifteen lines may be monitored simultaneously. Provision is made for automatic tape recorder control, and a seven digit dialed number can be recorded and displayed. Electrical circuits are transistorized. A battery or ac power source may be used. A reliability study made on the tentative breadboard design resulted in a predicted reliability which more than meets specifications.

Details of basic system requirements, the reliability study, circuit design and development, and mechanical design features are described and discussed in the following report. Typical electrical performance data also are included.

UNCLASSIFIED

1. Monitoring Set, Telephone, AN/GTA-13 (XE-2)
2. Signal Corps Contract No. DA36-039-sc-88911

AD_____Accession No._____

National Scientific Laboratories, Inc., Washington 6, D. C.
MONITORING SET, TELEPHONE, AN/GTA-13 (XE-2)
Francis E. Stimson

Final Report, July 1, 1961 to March 15, 1963, 128 pages and illustrations. Signal Corps Contract DA36-039-sc-88911, DA Project No. 3B21-09-001. Report UNCLASSIFIED.

Design of the two service test models of the Monitoring Set, Telephone AN/GTA-13 (XE-2) was based on the engineering test models which underwent performance tests and evaluation at USAERDL, Fort Monmouth, New Jersey. Few changes in the original design were necessary.

The AN/GTA-13 monitors any voice frequency land line by means of a two wire connection to a standard switchboard. As many as fifteen lines may be monitored simultaneously. Provision is made for automatic tape recorder control, and a seven digit dialed number can be recorded and displayed. Electrical circuits are transistorized. A battery or ac power source may be used. A reliability study made on the tentative breadboard design resulted in a predicted reliability which more than meets specifications.

Details of basic system requirements, the reliability study, circuit design and development, and mechanical design features are described and discussed in the following report. Typical electrical performance data also are included.

UNCLASSIFIED

1. Monitoring Set, Telephone, AN/GTA-13 (XE-2)
2. Signal Corps Contract No. DA36-039-sc-88911