UNCLASSIFIED

AD 405 569

DEFENSE DOCUMENTATION CENTER

FOR

SCIENTIFIC AND TECHNICAL INFORMATION

CAMERON STATION, ALEXANDRIA, VIRGINIA

UNCLASSIFIED

NOTICE: When government or other drawings, specifications or other data are used for any purpose other than in connection with a definitely related government procurement operation, the U. S. Government thereby incurs no responsibility, nor any obligation whatsoever; and the fact that the Government may have formulated, furnished, or in any way supplied the said drawings, specifications, or other data is not to be regarded by implication or otherwise as in any manner licensing the holder or any other person or corporation, or conveying any rights or permission to manufacture, use or sell any patented invention that may in any way be related thereto.

63-3-5

TAM PRODUCTS
Registered U.S. Pat. Off.

405 569

405569

THIS DOCUMENT CONTAINS
RESTRICTED DATA

TITANIUM ALLOY MANUFACTURING DIVISION

research laboratories

THERMOELECTRIC MATERIALS

Final Report

Contract No. NObs 78326

Index Numbers
SR-01002401Br and SR-007-12-01

January 31, 1963

THERMOELECTRIC MATERIALS

FINAL REPORT

Edited by
Merton H. Brooks
Assistant Chief
Physics Division
Research Laboratories

National Lead Company
Titanium Alloy Manufacturing Division
Niagara Falls, N.Y.

31 January, 1963

Contract No. NObs 78326
Index Nos. SR-010024-1Br and SR-007-12-01
15 January, 1960
$84,300

Department of the Navy
Bureau of Ships
Washington 25, D.C.

TABLE OF CONTENTS

	Page No.
Abstract	1
Introduction	2
Summary	3
Conclusions	3
Recommendations	4
Preparation of Materials	4
Fabrication of Shapes	5
Equipment and Technique of Measurement	6
Ceramic Properties	6
Electrical Properties	6
Results	12
Discussion	12
Observation of Data	13
Simple Oxides	13
Lithium Metatitanates	14
Multiple Oxides	15

LIST OF ILLUSTRATIONS

Table I	Identification of Raw Materials
" II	Identification of Compounds Prepared
Figure I	Auxiliary Circuitry for Electrical Measurements
" II	Automatic Resistance Range Switching Operation
" II	(Supplement) D.C. Current Supply for ARRSO
" III	Circuitry For Manual Measurement of Resistivity
" IV	Automatic Seebeck Coefficient Measuring Apparatus
" V	Modified Circuitry For Skinner Thermal Comparator
" VI	Temperature Difference vs Mean Temperature; Skinner Thermal Comparator, 6 Hour Heating Cycle
" VII	Seebeck Coefficient as a Function of Temperature; Nb_2O_5 Additions to TiO_2
" VIII	Electrical Resistivity as a Function of Temperature; Nb_2O_5 Additions to TiO_2
" IX	Seebeck Coefficient as a Function of Temperature; Ta_2O_5 Additions to TiO_2
" X	Electrical Resistivity as a Function of Temperature; Ta_2O_5 Additions to TiO_2
Appendix	Table AI
	Table AII
	Table AIII

ABSTRACT

Three hundred twenty-three oxide, silicate, and metal hydride combinations were prepared and fabricated into test specimens by a variety of forming and firing techniques. Of these combinations, 309 were examined electrically for Seebeck effect and resistivity from 600 to 1200°C; the remaining few failed in test.

Amongst electronic semiconductors were the following n-type examples. Titanium dioxide plus 2.0 m/o Nb_2O_5 exhibited a Seebeck coefficient of -400μv/°C and resistivity of 0.1 ohm-cm over the entire temperature range of test. Barium titanate plus 0.5 m/o Nb_2O_5 had a Seebeck coefficient of -1700μv/°C at 750°C increasing in magnitude to -3000μv/°C at 1225°C; the resistivity of this composition is unknown but is certainly greater than 5 ohm-cm. No p-type electronic semiconductor with consistent carrier type over the entire temperature range of test was developed.

Positive Seebeck coefficients of considerable magnitude were developed in ionic conductors; ZrO_2-7 m/o Y_2O_3 solid solution plus 10 m/o Nb_2O_5 exhibited a Seebeck coefficient of +1000μv/°C at 800°C rising to +1600μv/°C at 1100°C. The electrical resistivity of this composition was also greater than 5 ohm-cm. In general, most oxide semiconductors examined were found to be ionic conductors; Li_2TiO_3 was the singular example of such a material.

None of the compositions tested gave indication of truly efficient conversion of heat to electricity; the above TiO_2 plus 2.0 m/o Nb_2O_5 had an approximate figure of merit of 7.0×10^{-5}/°C.

INTRODUCTION

This final report describes work performed during the period Jan. 1960 to Aug. 1963 under Contract No. NObs 78326 (Index Nos. SR-010024-1BR and SR-007-12-01). The Contract Administrator was Mr. B. B. Rosenbaum, Code 342B, Bureau of Ships, Department of The Navy.

The ultimate objective of this work was the direct conversion of thermal to electrical energy using the Seebeck effect. This method of energy conversion is of interest to the Bureau of Ships for silent, maintenance-free ship-board and remote surface installations. Materials for this thermoelectric conversion were desired for operation in the temperature range from atmospheric ambient to approximately 1700°C. The work reported herein, however, was limited to certain more immediate goals. Only polycrystalline ceramic materials were investigated and the investigation itself was of a preliminary nature. Further development work was to be undertaken only if warranted.

The specific material nature of this work had its origin in a Research Proposal submitted by this laboratory to the Bureau of Ships on 1 May 1959. The examination of materials was limited to a broad, screening type evaluation, which was more extensive than intensive. The approach to the problem was as follows. For the temperature range of interest, 700°C to 1300°C, the most favorable materials were considered to be those refractory oxides and silicates which exhibit the property of, or potentiality for, semi conduction. For simplicity, foreign atom metal oxide "doping" was employed to effect semi-conduction by the "controlled valency effect". Fabricated materials were then screened by electrical measurements; resistivity and Seebeck Coefficient were measured as a continuous function of temperature from 600°C to 1250°C. As a preliminary criterion of usefulness, the square of the Seebeck coefficient divided by the electrical resistivity was usedto decide if the thermal conductivity should be determined. If the latter was warranted, the thermoelectric efficiency was calculated; this needed doing for only one material.

The work covered by this report was under the general supervision of Dr. Stephen F. Urban, Director of Research. Material preparation, under the guidance of William J. Baldwin, Chief Ceramist, was done by Robert Peters, Jerrald L. Bliton, Harold Olander, Eugene J. Derefinko, Mrs. J. Cologgi, Chester Winiarski, and Joseph A. Vilardo. The design and construction of electrical measuring equipment and the actual measurements and calculations, under the guidance of Ernest G. Graf, Chief Physicist, were carried out by Truman C. Rutt, Anthony D. Janulionis, Eugene J. Derefinko, Joseph J. Goslin, and Joseph A. Vilardo.

Robert Peters wrote the portion of this report that covers material preparation and fabrication, Eugene J. Derefinko wrote the portion that deals with electrical instrumentation and measurement; they also prepared the tabulations and illustrations.

SUMMARY

Certain specific results of this work are collected below under "Conclusions"; the most notewhorthy of these are presented in accompanying illustrations. The total remaining results are given in an Appendix of three tables. The "Conclusions" are drawn from observations on approximately 20 compositions; interpretation is confined to the few principles known to apply to the type of materials under investigation. The "Recommendations" following, are prognosticative in nature but very practical in origin.

A satisfactory oxide ceramic composition for efficient conversion of heat to electricity did not evolve from the present work.

Conclusions

Titanium dioxide, when modified by addition of from 1.0 to 5.0 m/o Nb_2O_5 and Ta_2O_5, is a moderate n-type thermoelectric having a Seebeck coefficient of -400μ v/°C from 600 to 1200°C. The Nb_2O_5 additions have an electrical resistivity of approximately 0.1 ohm-cm while that of the Ta_2O_5 additions is about 0.5 ohm-cm. TiO_2 + 2.0 m/o Nb_2O_5 has an approximate figure of merit of 7.0×10^{-5}/°C.

Niobium pentoxide appears to be a universal dope for conversion of oxide ceramics to thermoelectric semiconductors. In addition to TiO_2, there are CeO_2+ 4.0 m/o Nb_2O_5 exhibiting -500μv/°C and 1.5 ohm-cm, and $BaTiO_3$+0.5 m/o Nb_2O_5 exhibiting -1700 to -3000μv/°C and resistivity greater than 5 ohm-cm. Amongst materials having a positive Seebeck coefficient, 10.0 m/o Nb_2O_5 added to ZrO_2-7 m/o Y_2O_3 solid solution effects an ionic p-type thermoelectric exhibiting +1000 to +1600μv/°C and resistivity greater than 5 ohm-cm.

Oxide ceramic thermoelectrics tend to be ionic conductors, particularly those with positive Seebeck coefficients. In addition to the ZrO_2-based compositions as mentioned above, Li_2TiO_3 with additions of oxides of a wide range of oxidation states appear, with one exception, to be ionic conductors. From 900 to 1200°C Li_2TiO_3 + 5.0 m/o CeO_2 has an average Seebeck coefficient of +1400μv/°C and an average resistivity of 25 ohm-cm. The orthochromites of lanthanium and yttrium are also ionic with +500 to +1100μv/°C Seebeck coefficient and resistivities down to 1 to 2 ohm-cm.

High temperature p-type electronic semiconductors are extremely difficult to achieve using oxide ceramic materials. All such compositions prepared by controlled-valency doping become intrinsic at high temperature. On the other hand, titanium-containing high dielectric constant insulators are readily converted to n-type electronic semiconductors with appreciable negative Seebeck coefficients; the Nb_2O_5-doped $BaTiO_3$ above is the prime example.

Structurally, the most favorable materials investigated were based on a face-centered cubic array of oxygen atoms with metallic ions distributed in the interstices. These metallic ions were, in part, of the transition metals and octahedrally surrounded by six oxygen atoms.

Recommendations

Extensive examination of Nb_2O_5 and the niobates should be undertaken to determine if Nb_2O_5 has an even broader use in producing thermoelectric effects in oxide ceramics and to determine if other niobates than those of lead are convertible into thermoelectrics.

High dielectric constant insulators, including titanates, should be tested for thermoelectric effects. Experience indicates that when such materials are converted to semiconductors by doping, the electrical resistivity decreases with increasing temperature. Since the Seebeck coefficient, at least for doped $BaTiO_3$, increases in magnitude with increasing temperature, such materials may be susceptible to further modification to take advantage of both a large Seebeck coefficient and the increased number of carriers which are freed at high temperature. Cadmium niobate is suggested as an example.

An investigation should be initiated of refractory oxides for the development of p-type electronic semiconductors which do not become intrinsic at high temperatures. Co-valent oxides which have properties similar to some of those of SiO_2 should be given first consideration and ionic compounds avoided absolutely.

Separate from thermoelectric phenomena, some of the ionic semiconductors observed in this work should be investigated for use as high temperature solid electrolytes. Li_2TiO_3 is strongly recommended for such consideration and $LaCrO_3$ and $YCrO_3$ are also suggested.

PREPARATION OF MATERIALS

The raw materials for this work, from some of which further compounds and solid solutions were prepared, are listed in Table I; the compound, purity, and source are given. These materials, which include both base materials and "dopants", were used in two ways; as base materials to which "dopants" were added, and to synthesize other compounds to which "dopants were then added. The compounds and solid solutions prepared are listed in Table II. For each preparation, the reactants and conditions of synthesis are given. Additions to base materials were of two orders of magnitude. In a few cases major additions were made; these actually resulted in binary system phases. Minor additions were made in most cases and these were limited to several mol percent of "dopant".

For additions to the base materials, a Standard Series of Additions of dopant was chosen as 0.1, 0.2, 0.5, 1.0, 2.0, 5.0 mol percent. This range of concentrations was selected because it covers the apparent pertinent range of doping for oxides to produce semi-conduction by the controlled valency effect. The increment relation was selected because it is approximately equi-spaced linearly through two decades of the base-10 logarithm scale. When results from an entire Standard Series indicated that other dope levels might produce better thermoelectric effects, then intermediate additions of 3.0 and 4.0 mol percent or extended additions of 4.0, 7.0, and 10.0 mol per cent were prepared.

The uniform procedure devised for preparation of all Standard Series of

Additions was as follows. All materials were weighed on balances sensitive relative to the amount being weighed. The addition for each member of the Series was pre-mixed with a small amount of the base material in a Spex Mixer/Mill for 3 minutes. This pre-mix and the remainder of the base material were then wet blended using water in a laboratory ball mill for one-half hour. The mill discharge was dried at 350°F for 16 hours and then passed through a laboratory Mikropulverizer. For those systems requiring calcination prior to fabrication, the calcination was followed by wet ball-milling to -325 mesh.

FABRICATION OF SHAPES

A Standard Ceramic Body was designed as the test shape for electrical properties. It was desired that this final sintered shape be a right parallelopiped having approximate dimensions of $^1/_4$" thickness, $^1/_2$" width, and $2^1/_2$" length. Thus the ratio of thickness to width to length was 1 to 2 to 10. These shape and dimension conditions were chosen in order to meet requirements for determination of electrical resistivity by the 4-point probe method when all four points of contact are co-planar. To effect this shape, an opposing double-plunger die was designed such that the dimensions of the green body were $2^3/_4$" by $^7/_{10}$" and of variable thickness depending on the particular material. The female die recess was sufficiently deep to accommodate the necessary amount of material, regardless of density, to insure $^1/_4$" sintered thickness. This entire assembly was mounted on a Blackhawk Porto-Power Press provided with double acting 20 ton hydraulic rams.

The final compositions, as -325 mesh powders, were prepared for forming by the addition of a binder; 5 $^w/_o$ of a solution of 5 $^w/_o$ polyvinyl alcohol in water was used. The powders were loaded into the die and the green bodies were formed by double action at 10,000 psi for 5 seconds. The green bodies were sintered, under their respective varying conditions, in three different kilns. A muffle-type Harper electric kiln with SiC heating elements was used for sinterings up to 2600°F. For temperatures between 2600°F and 3150°F, a gas-fired, down-draft kiln constructed in this laboratory was employed. For those compositions containing metal hydrides, an especially constructed Harper electric kiln with molybdenum elements and atmospheric control of both element and specimen chambers was used to de-hydride the oxide-hydride composites. Insofar as it was possible, optimum conditions of sintering were determined experimentally for each composition. The actual conditions of sintering of each composition are given in the tabulations described below.

The sintered Standard Ceramic Body was electroded at each end of one of the lateral surfaces. This was to insure electrical contact between the material and the external current leads for resistance measurements by the 4-point method. Hanovia No. 6082 platinum paste was applied with a small screed and fired-on by heating to 1500°F with a $^1/_2$ hour hold time.

EQUIPMENT AND TECHNIQUE OF MEASUREMENT

Ceramic Properties

All ceramic properties were determined from the various weighings, described below, of the Standard Ceramic Body. All weighings were made on a Mettler Type H-15 single pan, precision analytical balance. Distilled water was used as the weighing and saturation media; to insure saturation, all specimens were boiled in water for 2 hours. Each Standard Ceramic Body was weighed dry, saturated, and then suspended. From these weighings were determined absorption, apparent density, bulk density, and porosity; only the latter two characteristics are reported as being the most important. The bulk density was obtained as the quotient of dry weight by the difference between saturated weight and suspended weight. The porosity was obtained from the difference between saturated and dry weights divided by the difference between saturated and suspended weights.

Electrical Properties

Measurement of electrical properties, as a function of temperature to 1250°C, was accomplished with a somewhat elaborate complex of equipment. A horizontal tube furnace, with a Kanthal REH 10-30 1800 watt heating element, was constructed to provide the high temperature environment. The heating element contained a 4" OD zircon tube of 1/4" wall thickness as a liner; a hot zone of approximately 6" length was obtained within the liner.

A double, parallel position specimen holder of rectangular channel shape, 2" long and 1/2" inside width, was fabricated of insulating alumina impregnated with alumina cement. A specimen-contact thermocouple (Pt-Pt 10% Rh) was provided at each end of the bottom of each channel, with a non-contact thermocouple (Pt-Pt 10% Rh) in a well adjacent to the "cold" end contact thermocouple. Four point contacts (Pt), linearly spaced 1/2" apart, were provided in an alumina block which fit inside the channel and rested on top of the specimen. These contacts were for the current leads and "floating voltage" probes.

1. Auxiliary Equipment

Figure I is a schematic diagram of the circuitry for control, switching, and timing of all measurement instrumentation. The timer is set for a period long enough to encompass both the heating and cooling cycles of the furnace, 25°C to 1250°C to 600°C, and the timer contacts closed. This furnishes power to the amplfier and the recorder and closes Relay No. 3. Relay No. 1 is then activated by mechanical pushbutton, turning on the power to the furnace and the Wheelco furnace control. The furnace control then turns on, completing the circuit for the coil of Relay No. 1 and also Relay No. 2. When Relay No. 2 is activated (heating cycle), the circuit for the Automatic Resistance Range Switching Operation (ARRSO) is completed and resistance measurements are made. When the furnace reaches temperature (1250°C), the Wheelco furnace control breaks the circuit for Relays Nos. 1 and 2 shutting off the furnace and Wheelco Control, thus starting the cooling cycle. In the deactivated position Relay No. 2 shuts off the power to the ARRSO and furnishes power to the relays of the Automatic Seebeck Coefficient Measuring Apparatus (ASCMA). At the completion of the

cooling cycle the timer opens the timer contacts, S_1, shutting off the power to the timer motor, amplifier, recorder, and Relay No. 3. In the deactivated position, Relay No. 3 breaks the power to the ASCMA. Relay No. 3 also acts as a fail-safe device in that should the AC power to the recorder fail, the DC power to the ARRSO and ASCMA will be shut off, thus preventing the intermittent duty type relays from burning out if the recorder stops in a position operating the relays.

2. Resistance Measurement; Automatic Resistance Range Switching Operation

Figure II is a schematic diagram of circuitry for the measurement of electrical resistance; the operation is as follows: At recorder points 5 and 6 the recorder closes S_2 operating Relays Nos. 1, 2 and 3. Relay No. 1 is a SPST relay connecting the power supply output from R_9 through Relays Nos. 2 and 3 to the specimen current probes. Relay No. 2 is a 4PDT latching relay which reverses the polarity of the current to the specimen upon activation. Relay No. 3 is a 4PDT relay which, in the activated position on recorder points 5 and 6, connects the current supply to sample 1 and connects the top voltage probes of sample 1, through the reversing Relay No. 2, to recorder point 5. In the deactivated position Relay No. 2 connects the top voltage probes of sample 2, through reversing Relay No. 2, to recorder point 11 and connects the current supply to sample 2. During the 10 sec. print interval of recorder point 5, the following takes place: If the voltage across the specimen is greater than 20 mv, S_3 on the recorder is activated; if S_3 remains closed for longer than the one second time delay afforded by R_1 and C_1 of Relay No. 4, Relay No. 4 closes and remains closed (due to a holding circuit) shorting out the top voltage probes and precision resistors R_7, R_8, R_9. Thus under the conditions where the specimen has a resistivity of 5 ohm-cm or greater, recorder points 5 and 6 print zero. If, on the other hand, when recorder point 5 comes into print position and S_2 is activated and the drop across the top probes is between 2 mv and 20 mv, then no switches are activated and recorder point 5 records the "floating" voltage representative of true resistance and recorder point 6 records the voltage across the known resistance $R_7+R_8+R_9$.

If the drop across the top voltage probes is less than 2 mv, switch S_4 is activated; if S_4 is closed for one second, Relay No. 5 is closed which switches out dropping resistor R_4 and precision resistor R_7. If this increase in current is sufficient to drive the recorder above 2 mv, recorder point 5 prints the top probe voltage as before, and recorder point 6 prints the voltage drop across the known resistance R_8+R_9. If the recorder still remains below 2 mv, Relay No. 6 activates one second after Relay No. 5, switching out dropping resistor R_6 and precision resistor R_8. Then recorder Point 5 prints the top probe voltage and recorder point 6 prints the voltage drop across precision resistor R_9. Thus there are three approximate current ranges of 2 ma, 15, ma, and 100 ma corresponding to range resistors ($R_7+R_8+R_9$, (R_8+R_9), and R_9 respectively. Now since the top probe voltage and voltage across the appropriate range resistor are known, the exact current can be computed; from the voltage drop, the exact current, and sample dimensions, the resistivity can be computed.

A similar process occurs for recorder point 11 and 12 except that Relays Nos. 2 and 3 are not activated when S_1 is operated for points 11 and 12. Since Relay No. 2 is activated in alternate recorder cycles, the polarity of the current and the consequent polarity of the top voltage probes is reversed for every other recording. Hence it is possible to cancel the Seebeck effect on the resistivity by averaging two successive recordings of the top voltage probes. The time delay circuits are necessary to allow the recorder time to balance in range before switching occurs.

Calculation of resistivity: Consider any given Standard Ceramic Body undergoing two successive measurements, with the indicated current reversal:

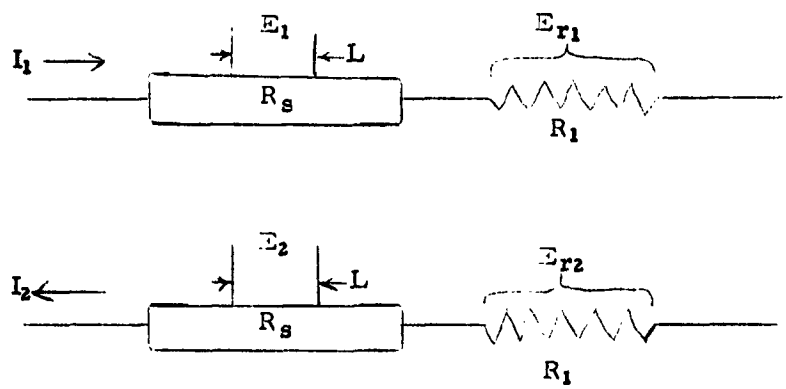

Assume that the Seebeck voltage E_s and the sample resistance R_s remain constant for two successive recorder prints of the top probe voltages E_1 and E_2 and of the voltages E_{r1} and E_{r2} across the precision resistors R_1 and R_2; then

$$E_1 = I_1 R_s + E_s \text{ and } E_2 = I_2 R_s - E_s$$

adding: $$E_1 + E_2 = R_s (I_1 + I_2)$$

but $$I_1 = \frac{E_{r1}}{R_1} \text{ and } I_2 = \frac{E_{r2}}{R_2}$$

substituting $$R_s = \frac{(E_1 + E_2)(R_1 R_2)}{E_{r1} R_2 + E_{r2} R_1}$$

Under most conditions the Seebeck voltage is not large enough to cause a switching of ranges so $R_1 = R_2$ and $E_{r1} \approx E_{r2}$. Hence the equation for sample resistance becomes

$$R_s = \frac{(E_1 + E_2)}{2 E_{r1}} R_1$$

Knowing the resistance R_s for any given sample, the cross sectional area A, and the distance L between the top voltage probes, the resistivity is

$$P_s = \frac{R_s A}{L}$$

$$\text{or} \quad P_s = \left[\frac{(E_1 + E_2)(R_1 R_2)}{E_{r_1} R_2 + E_{r2} R_1}\right] \left[\frac{A}{L}\right]$$

$$\text{or} \quad P_s = \left[\frac{E_1 + E_2}{2}\right] \left[\frac{R_1}{E_{r_1}}\right] \left[\frac{A}{L}\right]$$

3. Resistance Measurement; Manual Operation

Certain Standard Ceramic Bodies with large Seebeck Coefficients, had resistivities greater than the 5 ohm-cm limit of the ARRSO; the resistance of these specimens were measured manually. The 4-point probe method was employed with the same sample holder and contacts designed for the ARRSO. Four 1½ volt dry cell batteries connected in series furnished the current supply. The measured "floating voltage" was read from a Leeds and Northrup K-2 Potentiometer using a galvanometer to indicate balance. The specimen temperature was read from a Leeds and Northrup portable potentiometer indicator. Figure III shows the circuitry and apparatus used to switch the voltage and current connections from one sample to the other. This switch-gear was also used to reverse the current through the specimen so that the effect of the Seebeck voltage could be eliminated. The resistance was obtained from the voltage drop across the specimen, E_1, and the voltage drop, E_{r_1}, across the known resistor R_1. Then the current was reversed and E_2 and E_{r_2} were obtained. The resistance was calculated as follows:

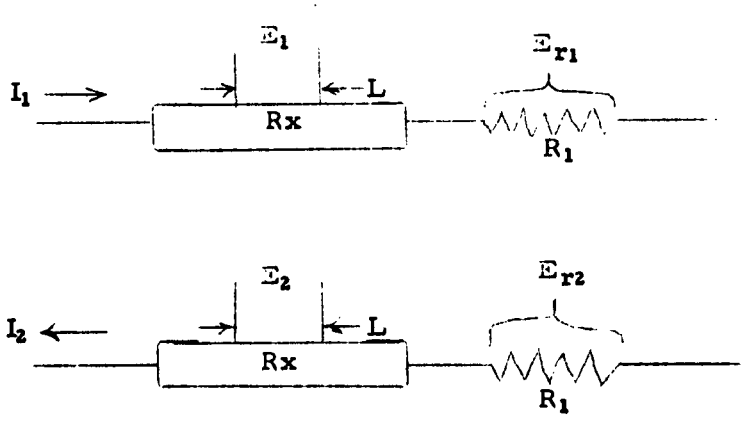

If R_x = resistance of specimen, and

R_1 = resistance of known resistor, then

$$\frac{E_1 + E_2}{R_x} = I_1 + I_2$$

and

$$\frac{E_{r_1} + E_{r_2}}{R_1} = I_1 + I_2 \;;$$

equating the left-hand-side of these gives

$$R_x = \frac{(E_1 + E_2)\, R_1}{(E_{r_1} + E_{r_2})}$$

$$\text{and } p = R_x \frac{A \text{ (cross section)}}{L \text{ (probe gauge-length)}}$$

For each set of data, the furnace was allowed to stabilize at temperature so that E_1 and E_2 were obtained at the same temperature. A specimen-contact thermocouple, shown in Figure III, was used to obtain the temperature of measurement.

4. Seebeck Coefficient Measurement

Figure IV is a schematic diagram of the Automatic Seebeck Coefficient Measuring Apparatus. The temperature, Seebeck voltage, and temperature gradient producing the Seebeck voltage in the two specimens are all recorded with the Leeds and Northrup Speedomax Type G Recording Potentiometer. The recorder prints at 10 sec. intervals and measures 2o mv. full scale.

For sample 1 the temperature is printed at recorder point 1 from the thermocouple not in contact with the sample. Point 2 prints the Seebeck voltage with respect to platinum from the platinum leads of the two thermocouples in contact with the specimen. The Seebeck voltage is fed to the recorder in series with an external +10.0 mv from a Leeds and Northrup potentiometer indicator. This +10.0 mv. effects a center scale zero on the recorder, the recorder then prints both the sign and magnitude of the Seebeck voltage indicating p- and/or n-type semiconduction. At recorder points 3 and 4 Relay No. 1 is energized connecting the thermocouples from sample 1 to Relays Nos. 2 and 3. At recorder point 3 Relay No. 2 is energized connecting the non-contact, or coldest, thermocouple in differential with the cold zone contact thermocouple; this differential output is amplified 100 X and printed. At recorder point 4 the non-contact thermocouple is connected in differential with the hot-zone contact thermocouple; this output is also amplified 100 x and printed. A similar process takes place at recorder points 7, 8, 9 and 10 for sample 2 with Relay No. 1 in the de-energized position. When both Relays Nos. 3 and 4 are in the de-energized position, the input to the amplifier is shorted out giving faster amplifier response at recorder points 3, 4 and 9, 10.

The difference between recorded emfs of say points 3 and 4, divided by the thermoelectric sensitivity of Pt vs Pt-10% Rh at a given temperature, and then divided by 100 gives the temperature gradient in sample 1. Since the Seebeck voltage has been measured and recorded, the Seebeck coefficient can be calculated. The reason for taking the differential emf between the non-contact and contact thermocouples instead of the contact thermocouples directly is that for large Seebeck voltages and low sample resistances, the resistance of leads and relays, connecting both contact thermocouples in differential, may be as large as the sample resistance and hence the Seebeck effect would dominate the differential circuit to the exclusion of the temperature difference.

The following example illustrates how the Seebeck coefficient is obtained from the recorded data. Recorder point 1 was found to read 5.85 mv; 0.15 mv was added to compensate for thermocouple cold junction at room temperature. The temperature for 6.00 mv is 676°C; at this temperature the thermoelectric sensitivity of Pt vs Pt-10% Rh is 0.0103 mv. Dividing 0.0103 mv into 0.079 mv, which was found by taking the difference of potential between recorder points 3 and 4 and dividing by 100, the temperature gradient is found to be 7.7°C. From recorder point 2 the Seebeck emf was found to be -6.45 mv indicating n-type conduction. Dividing -6.45 mv by 7.7°C and multiplying by 1000 gives a Seebeck coefficient of -838μv/°C at 676°C.

5. Thermal Conductivity

Thermal conductivity was approximated using a modified form of the Thermal Conductivity Comparator designed by Kenneth Skinner of the Naval Research Laboratories. The major modification was the addition of circuitry to insure uniform heating cycles. A diagram of this circuitry is shown in Figure V. The Leeds and Northrup Speedomax Type G 4-point Recording Potentiometer was used to measure the "hot" and "cold" temperatures of the specimen; the Brown Electronik Recording Potentiometer was used as a furnace control.

In operation, when the furnace is cold, an opposing voltage is fed in series into the Brown furnace control and adjusted so that this voltage plus furnace thermocouple voltage just equals the voltage needed to drive the furnace control to the pre-set maximum temperature. The clock motor of the programer is then started which decreases the voltage in series with the thermocouple as a linear function of time. The time for a cycle is adjusted by the position of the slide wire before the voltage adjustment. As the opposing voltage decreases, the furnace temperature increases until the thermocouple voltage plus the new opposing voltage shuts off the furnace. This process repeats continually with the furnace increasing in temperature until the opposing voltage is reduced to zero and the thermocouple supplies all the voltage at shut-off temperature. Since the voltage output is approximately a linear function of temperature, the heating cycle is approximately a linear function of time. A linear heating cycle insured reproducibility, whereas a constant input did not.

The results obtained from the Skinner Thermal Comparator are interpreted in the following manner: The Leeds and Northrup Recorder prints two color-coded sets of data for each sample. One set of points represents the temperature of the "hot" side of the specimen and the other set the "cold" side. The temperature gradient in the specimen is obtained by difference, from the raw data, and plotted against the mean temperature. This produces a curve which is a relative indication of the thermal conductivity of the specimen; that is, the smaller the thermal gradient, the higher the thermal conduction. Graphical expression of this relation is shown in Figure VI.

RESULTS

The final data, resulting from measurement of ceramic and electrical properties, are presented either as illustrations or in tables. In both cases the electrical properties are presented as a function of temperature. Electrical properties of the most promising materials, only, are presented graphically; the majority of the results are collected in three tables in an Appendix to this report.

The pertinent ceramic properties of all specimens screened are given in the Appendix; these properties are time and temperature of sintering, bulk density, and porosity. The Seebeck Coefficient and electrical resistivity both at a series of temperatures, and an estimate of the type of conduction mechanism are also given for these materials which are not presented graphically.

Seebeck Coefficients as a function of temperature, for TiO_2 containing several levels of Nb_2O_5, are given in Figure VII; in Figure VIII are given the electrical resistivities as a function of temperature for the same compositions. Figures IX and X show the temperature dependence of Seebeck Coefficient and electrical resistivity, respectively, of TiO_2 containing several levels of Ta_2O_5. The materials presented in these four figures are the best thermoelectrics resulting from this work; all are n-type semiconductors. The most favorable composition is TiO_2 containing 2.0 w/o Nb_2O_5. This composition has an approximate figure of merit of $7.0 \times 10^{-5}/°C$.

Table AI in the Appendix contains ceramic and electrical results for compositions based on simple oxides: TiO_2, ZrO_2, CeO_2. In Table AII of the Appendix are contained the ceramic and electrical results for those compositions based on lithium metatitanate, Li_2TiO_3, and for the analogous Li_2SnO_3 and $LiAlO_2$. The ceramic and electrical results listed in Table AIII of the Appendix are for compositions based on multiple oxides: $BaTiO_3$, $LaCrO_3$, $YCrO_3$, $PbNb_2O_6$ and $Pb_2Nb_2O_7$.

DISCUSSION

Since thermoelectric energy conversion is essentially an electrical phenomenon, only that aspect of the experimental results are covered here. However, the physical state of a test specimen, as regards conventional ceramic properties, constitutes a prior condition on the resultant electrical properties. Chief amongst these ceramic properties is the porosity of the specimen. Since some Standard Ceramic Bodies were not sintered to zero porosity, the electrical effects of pores should be pointed out. For porosity no greater than a few percent, electrical resistivity increases directly with porosity; at larger porosities, the resistivity of the pore contents enters as that of the second phase of a mixture on a volume basis. The effect of pores on the Seebeck coefficient, that is, the nature of the temperature coefficient of the Fermi level for pores and pore-solid interfaces, is not known.

Observation of Data

The actual recording of the raw electrical data, that is, the instrumental response of the Leeds and Northrup Recording Potentiometer, served as the basis of interpreting analysis of the results. Since neither Hall effect nor diffusion effects were measured, only an estimate could be made, as described below, as to the nature of the conduction mechanism.

The algebraic sign of the Seebeck coefficient, S, was taken as a partial indication of carrier type: for $S > 0$ the net carrier effect was assumed to be due to holes, or direct diffusing cations, or anion vacancies; for $S < 0$ the net carrier effect was assumed to be due to electrons, or direct diffusing anion, or cation vacancies. Two supplementary criteria were available to aid in the estimation of carrier type. A firm, steady print of resistance, by the Leeds and Northrup Recording Potentiometer, was taken to indicate electron or hole conduction; a slow, continuous drift of the resistance print during the 10 record print interval was taken to indicate conduction by ions, either direct or through vacancy mechanism. Alternate high and low print of resistance, upon reversal of direction of external current, was also taken as an indication of ionic conduction, although rectification and thermal gradient effect are both possible explanations of this instrumental response. Combined with drift, this alternation of resistance value was taken as certain indication of ionic conduction; this effect was observed in many materials and was estimated to occur in many other materials, the resistivities of which were too great to respond to instrumental limits. These latter materials are indicated "ionic uncertain" in the tables in the Appendix. However, the thermal gradient and externally applied electric field alternately reinforce and oppose each other, thus confounding the above "uncertainty".

The electrical data alone furnished a criterion of usefulness in that the S^2/p quotient must be equal to or greater than 10^{-5} watt/ cm $(°C)^2$ in order to give $Z = 10^{-3}/°C$. Hence, electrical evaluation determined whether thermal conductivity needed to be measured; none of the materials measured electrically warranted determination of thermal conductivity.

Simple Oxides

Amongst these compositions the only materials that produced a thermoelectric effect were those based on either rutile or fluorite structure; and, indeed, rutile itself is the most favorable material of all those examined. From Figures VII and VIII it is seen that 1.0, 2.0, and 5.0 m/o Nb_2O_5 additions to TiO_2 produce moderate thermoelectric semiconductors in the temperature range from 600 to 1200°C; specifically, TiO_2 plus 2.0 m/o Nb_2O_5 has a Seebeck coefficient of -400μv/°C and 0.1 ohm-cm resistivity. The same levels of additions of Ta_2O_5 to TiO_2, illustrated in Figures IX and X, produce the same results with the important difference that Ta_2O_5 does not lower the resistivity of TiO_2 as much as does Nb_2O_5. All of these compositions are typical n-type, controlled-valency semiconductors with the site-to-site conduction mechanism characteristic of such materials. Since the Seebeck coefficient is the same for Nb_2O_5-doped TiO_2 and Ta_2O_5-doped

TiO_2, then the energy of the electrons in excess of the chemical potential is the same, though the electrical resistivity is different. It should be noted that although stoichiometric imbalance could exist in these compositions, the experimental evidence did not indicate ionic conduction.

It is to be expected that smaller numbers of carriers would mean higher values of Seebeck coefficient and resistivity. Evidence of this is seen in Table AI for the composition TiO_2 plus 0.2 m/o MoO_3: -1100 μv/°C and resistivity greater than instrumental limits of 5 ohm-cm. The raw data for this composition are not sufficient, however, to state with certainty that this is an n-type electronic conductor

Amongst fluorite structures, the only noteworthy electronic semiconductor is CeO_2 plus 4 m/o Nb_2O_5: -500 μv/°C and 1.5 ohm-cm over the temperature range of 700 to 1200°C, shown in Table AI. This composition is similar to that of TiO_2 doped with Nb_2O_5. Apparent ionic conduction is found in the fluorite structure ZrO_2-7 m/o Y_2O_3 cubic solid solution. Although experimental evidence was not obtained here, it is well established that the conduction mechanism in ZrO_2 is exclusively ionic, via vacancies in the oxygen sublattice. In Table AI it is seen that addition of 10 m/o La_2O_3 to this ZrO_2-based composition resulted in a Seebeck coefficient ranging from +1000 μv/°C to +3000 μv/°C as the temperature increased from 900 to 1100°C; relaxation of atoms around an anion vacancy results in a net positive charge and hence a positive Seebeck coefficient. Containing 17 m/o sesquioxide, large numbers of oxygen vacancies exist in this composition; the large Seebeck coefficient is attributable to the temperature coefficient of the electrochemical potential of these vacancies. The higher resistivity accompanying the large Seebeck coefficient is expected, but may also be due to small transference numbers for oxygen ions and this in turn to diffusion effects in a thermal gradient and an electric field.

Addition of 10 m/o Nb_2O_5 to ZrO_2-7 m/o Y_2O_3 cubic solid solution, shown in Table AI, produced a Seebeck coefficient of +1000 to +1600 μv/°C as the temperature ranged from 800 to 1100°C. Stoichiometrically, this composition is unbalanced in the opposite direction to that discussed above; the Y_2O_3 is more than compensated for by the Nb_2O_5 and the net effect is 3 m/o excess of pentavalent oxide. It was to be expected that the Seebeck coefficient would decrease in magnitude upon stoichiometric compensation, but not that the Seebeck coefficient would remain positive upon over-compensation. It thus appears that the ionic mechanism of conduction in all ZrO_2-based compositions is an intrinsic property of ZrO_2.

Lithium Metatitanate

Of all those Li_2TiO_3-based compositions listed in Table AII, only two are of sufficient consistency of behavior to warrent discussion. Li_2TiO_3 has an MgO-type structure, with a random cation lattice, and undergoes an order-disorder transformation at about 1025°C. The undoped compound appears to be a strong ionic conductor, but the conduction process is quite erratic and is complicated by the order-disorder transformation. The nature of the conduction process may be attributed, in part, to the large difference in charge of the two similar-sized cations. Another contributing factor is a possible metastability of Li_2TiO_3 indicated by the ease of loss of Li_2O through volatilization. Hence, practically all Li_2TiO_3-based compositions exhibited large seebeck coefficients which varied widely with temperature; either a change in sign or a maximum or minimum occurred. None of these compositions exhibited an electrical resistivity small enough to respond to instrumental limits.

Li_2TiO_3 plus 0.5^m/o NiO, Table AII, had a Seebeck coefficient increasing from +1000μv/°C at 700°C to +1500μv/°C at 1150°C. A negative Seebeck coefficient should result if the Ni(II) replaces Li (I); but if the Ti(IV) is replaced, a p-type semiconductor should result. Since the cation sublattice is randomly occupied by Li(I) and Ti(IV), and Ni(II) is of the same size as both cations of the host lattice, then both substitutions can occur together. Now the electrical resistivity did not record, so the ionic mechanism of conduction remains uncertain. However, a hole, and/or an electron, contribution to the conduction process may account for the steady, but increasing, value of the Seebeck coefficient over the temperature range of measurement.

Li_2TiO_3 plus 2.0^m/o ThO_2 had a Seebeck coefficient decreasing from -850μv/°C at 800°C to -1200μv/°C at 1225°C. Considered an uncertain electronic conductor, this composition is the only Li_2TiO_3-based material which exhibited a consistent negative Seebeck coefficient. Since Th(IV) is so much larger than the cations of the host lattice, it is difficult to understand how the foreign cation enters the lattice. Also, explanation of the conduction mechanism is not possible with the limited data available.

Multiple Oxides

Structurally, the base compounds of these compositions are all perovskite-like, containing a transition metal ion surrounded by an octohedron of six oxygen atoms. The alignment of these octohedra, however, and their relation to the other cation of the compound, differ in each case. It is significant that the majority of compositions discussed here are apparent ionic conductors.

Barium titanate, a tetragonal perovskite, developed interesting thermoelectric properties when doped with 0.5^m/o Nb_2O_5 as shown in Table AIII. Although the resistivity was greater than instrumental limits of 5 ohm-cm, it is rather certain that this composition is an electronic conductor. The Seebeck coefficient ranged from -1700μv/°C at 750°C to -3000μv/°C at 1225°C, an n-type thermoelectric being produced by substitution of Nb(V) for Ti(IV). The negative sign and increasing magnitude of the Seebeck coefficient indicate that the material is becoming an intrinsic-type semiconductor as the temperature increases. The relatively large Seebeck coefficient may be attributed to two factors. As in the case of TiO_2, the controlled-valency effect is manifest, though the resistivity is not as low. Here, again, the carriers have considerable energy in excess of the chemical potential of the host lattice. The second factor is the large dielectric constant of $BaTiO_3$. When materials which conduct by the site-to-site mechanism are doped at the levels of this composition, the carriers observe the macroscopic dielectric constant of the host rather than the electronic structure of the host lattice. Hence, high dielectric constant insulators are readily modified to semiconductors of substanial Seebeck coefficient by an increase in both dielectric constant and loss factor, the latter ultimately exceeding 100%. Although such a composition has a large number of non-degenerate carriers, the site-to-site conduction mechanism is not effective enough to use such materials for energy conversion.

Lead metaniobate, $PbNb_2O_6$, a ferroelectric with a moderately high dielectric constant, while not a distorted perovskite, does contain discrete NbO_6 octahedra. Addition of 0.5^m/o Bi_2O_3 to $PbNb_2O_6$, see Table AIII, resulted in a thermoelectric material somewhat similar to the above $BaTiO_3$ composition. The Seebeck coefficient

ranged from -700μv/°C at 700°C to -2100μv/°C at 1100°C with a pronounced minimum of -3300μv/°C at 1015°C. The electrical resistivity, measured manually under static conditions, dropped from 70,000 ohm-cm at 700°C to 66 ohm-cm at 1200°C, exhibiting the negative temperature coefficient peculiar to oxide ceramic semiconductors.

Since Bi(III) is intermediate in size between Pb(II) and Nb(V), a definite site of substitution cannot be assigned; on the basis of electronegativity, however, Bi(III) should substitute for Pb(II). The thermoelectric semiconduction could arise as a consequence of the same effects ascribed to the $BaTiO_3$ composition above, since both lead and bismuth can exist in other oxidation states. The negative temperature coefficient of both resistivity and Seebeck coefficient indicate that this composition also tends to become an intrinsic semiconductor at high temperature. The decrease in magnitude of the Seebeck coefficient at temperatures above 1015°C might be attributed to the onset of ionic conduction due to thermal agitation since $PbNb_2O_6$ melts in the vicinity of 1200°C. It is of interest that just as Nb(V) is effective as a dope in producing thermoelectric semiconductors, so also, a niobate compound can be converted to the same condition by doping.

The orthochromites of some of the Lanthanon elements are perovskite-like compounds, actually having the garnet structure. The compounds, however, do not have the high dielectric constant of ferroelectrics. Compositions based on $LaCrO_3$ and $YCrO_3$ exhibited moderate Seebeck coefficients; all are ionic conductors. The data on the five most noteworthy of these are summarized from Table AIII below.

Composition	Seebeck Coefficient	Electrical Resistivity	Temperature Range	Conduction Mechanism
$LaCrO_3$ + 5.0 m/o TiO_2	+500μv/°C	2-3 ohm-cm	600 to 1100°C	ionic
$LaCrO_3$ + 1.0 m/o ZrO_2	+500 to +450	1	600 to 1200	ionic
$LaCrO_3$ + 5.0 m/o SnO_2	+575	2	600 to 1200	ionic
$YCrO_3$ + 5.0 m/o TiO_2	+850	>5	870 to 1170	ionic, uncertain
$YCrO_3$ + 0.5 m/o ZrO_2	+1100	>5	700 to 1200	ionic, uncertain

All compositions based on $LaCrO_3$ and $YCrO_3$ were quite refractory and very difficult to sinter; and not all of them resulted in satisfactory ceramic specimens. In all sintering trials, a dark greenish-grey fume-like deposit was observed on the interior of the sintering container. This indicates vaporization of chromium as some form of oxide. Hence, the stoichiometry of the base compound may be sufficiently out of balance to determine all the observed effects. If sufficient loss of chromium occurred, the number of vacancies in the above compositions may be of the same order of magnitude as in heavily doped ZrO_2 discussed before. The description of the observed effects may then be that the Seebeck coefficient is due to the temperature coefficient of the chemical potential of vacancies, the conductivity due to diffusion of ions in the oxygen sublattice via the vacancy mechanism. However, compensation by the added tetravalent oxide very likely occurred.

Referring to the above tabulation, certain general effects are to be noted. Doped $YCrO_3$ and doped $LaCrO_3$ are moderate ionic semiconductors with moderate Seebeck coefficients. A higher Seebeck coefficient and higher resistivity, as a consequence of a smaller number of carriers, are found in $YCrO_3$ than in $LaCrO_3$. The level of doping with tetravalent oxide, does not appear to be too significant, and indeed may not even be necessary. Finally, the orthochromite grouping alone may be the determining factor in the thermoelectric effects noted. These observations, however, depend greatly on the extent of sintering. The orthochromites of yttrium and lanthanum thus appear to be similar to ZrO_2 as regards an inherent ionic conduction process at high temperature.

Positive Seebeck Coefficient Semiconductors

Since all the compositions with positive Seebeck coefficients that are discussed above are ionic conductors, p-type electronic materials should be given separate attention. High temperature p-type semiconduction is virtually impossible to achieve in any material. Experience has shown that the number of thermally energized electrons overwhelms the number of controlled-valency-produced holes with resultant intrinsic semiconduction at high temperature. Numerous examples of this phenomenon are to be found in Tables AI and AIII. Compositions with positive Seebeck coefficients at lower temperatures are seen to undergo considerable change with increasing temperature, the Seebeck coefficient falling through zero to sizeable negative values. Lead metaniobate and lead pyroniobate, each without any addition, are examples of this, as is $PbNb_2O_6$ plus $1.0^m/o$ MoO_3. Other compositions are seen to exhibit a maximum or a minimum in Seebeck coefficient as a function of temperature, some with and some without changing sign. Examples of this behavior are shown by TiO_2 plus $5.0^m/o$ SnO_2, CeO_2+$0.2^m/o$ La_2O_3, $Pb_2Nb_2O_7$ plus $1.0^m/o$ Sb_2O_5, and $PbNb_2O_6$+ 0.2 Sb_2O_5. Thus a fundamental characteristic of semiconduction, hindering the development of high temperature p-type thermoelectrics, presents the major obstacle to the production of an efficient thermocouple operating over the temperature range of 700 to 1200°C.

TABLE I

Identification of Raw Materials

Compound	Source				Purity
Antimony (ous) oxide, Sb_2O_3	Fisher Scientific Co.,			A-860	99.7%
Antimony (ic) oxide, Sb_2O_5	"	"	"	A-857	Technical
Bismuth trioxide, Bi_2O_3	"	"	"	B-339	99.7%
Chromium(ic) oxide, Cr_2O_3	"	"	"	B-334	99.4
Ferric oxide, Fe_2O_3	"	"	"	I-116	99.7
Lead dioxide, PbO_2	"	"	"	L-101	"Special Micro"
Magnesium oxide, MgO	"	"	"	M-51	99.8
Molybdic anhydride, MoO_3	"	"	"	A-174	99.5
Stannic oxide, SnO_2	"	"	"	T-148	99.4
Stannous oxide, SnO	"	"	"	T-150	99.9
Thallium (ic) oxide, Tl_2O_3	"	"	"	T-86	Purified
Tungstic anhydride, WO_3	"	"	"	A-325	Purified
Lanthanum oxide, La_2O_3	Lindsay Chemical Div. American Potash and Chemical Corp.,			528	99.99%
Neodynium oxide, Nd_2O_3	"	"	"	629.9	99.9
Thorium oxide, ThO_2	"	"	"	112	99.9
Cerium oxide, CeO_2	"	"	"	217	99.9+
Yttrium oxide, Y_2O_3	"	"	"	1115	99.9
Lithium carbonate, Li_2CO_3	American Potash and Chemical Corp.				Technical
Nickelous oxide, NiO	Baker Chemical Co.,			2796	99.0

TABLE 1 (continued)

Identification of Raw Materials

Compound	Source		Purity
Niobium oxide, Nb_2O_5	Fansteel Metallurgical Co.,	721	99.5
Tantalum oxide, Ta_2O_5	" "	521	99.5
Titanium dioxide, TiO_2	TAM Div., National Lead Co., Vapor Phase		98.4
Zirconium dioxide, ZrO_2	TAM Div., National Lead Co.,	608	99.3
Barium titanate, $BaTiO_3$	TAM Div., National Lead Co.,	510	99.9

TABLE II

Identification of Compounds Prepared

Name of Compound or Solid Solution	Formula	Raw Materials	Synthesis Conditions Temp.	Time
Zirconia-yttria Solid Solution	$Zr_{0.93}Y_{0.07}O_{1.965}$	ZrO_2, Y_2O_3	2300°F	3 hrs
Zirconia-calcia Solid Solution	$Zr_{0.85}Ca_{0.15}O_{1.85}$	ZrO_2, $CaCO_3$	2300	3
Zirconia-ceria Solid Solution	$Zr_{0.83}Ce_{0.17}O_2$	ZrO_2, CeO_2	2300	3
Lithium metatitanate	Li_2TiO_3	Li_2CO_3, TiO_2	1800	3
Lithium Zirconate	Li_2ZrO_3	Li_2CO_3, ZrO_2	2200	2
Lithium aluminate	$LiAlO_2$	Li_2CO_3, Al_2O_3	1700	2
Lithium stannate	Li_2SnO_3	Li_2CO_3, SnO_2	1600	2
Lead metaniobate	$PbNb_2O_6$	$PbCO_3$, Nb_2O_5	1900	3
Lead pyroniobate	$Pb_2Nb_2O_7$	$2PbCO_3$, Nb_2O_5	1900	3
Yttrium orthochromite	$YCrO_3$	Y_2O_3, Cr_2O_3	2300	3
Lanthanum orthochromite	$LaCrO_3$	La_2O_3, Cr_2O_3	2400	3

FIGURE I

AUXILIARY CIRCUITRY FOR ELECTRICAL MEASUREMENTS

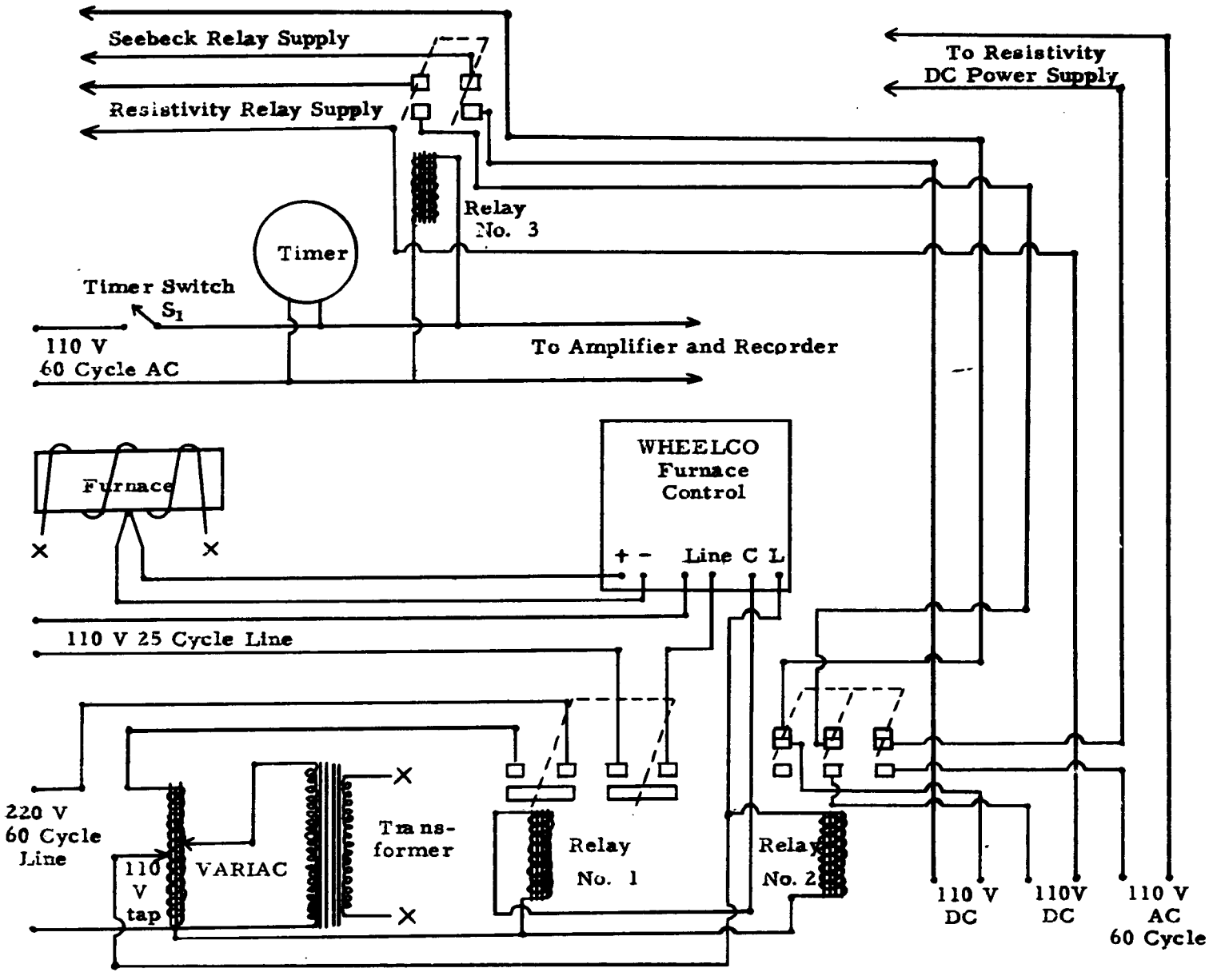

FIGURE II

AUTOMATIC RESISTANCE RANGE SWITCHING OPERATION

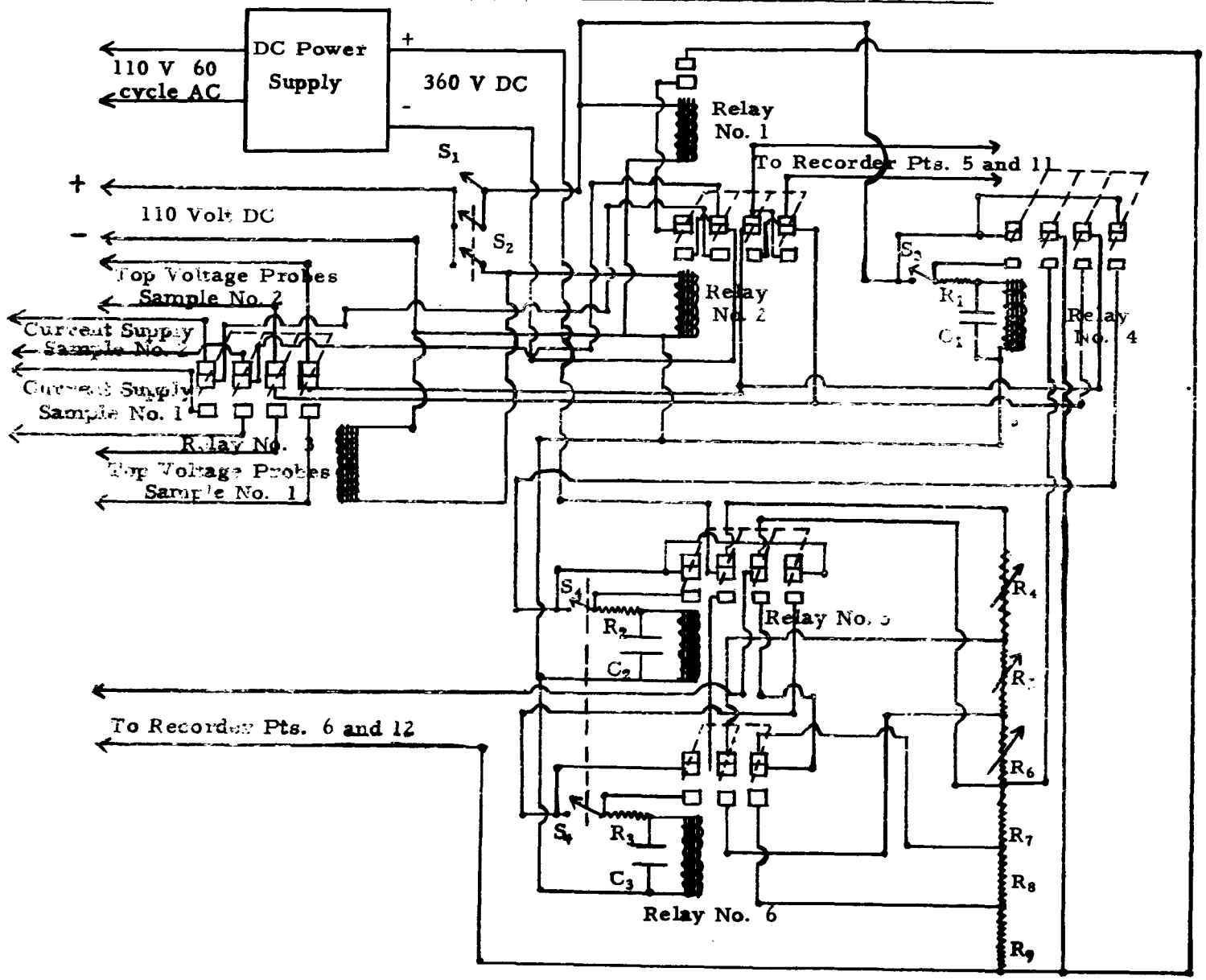

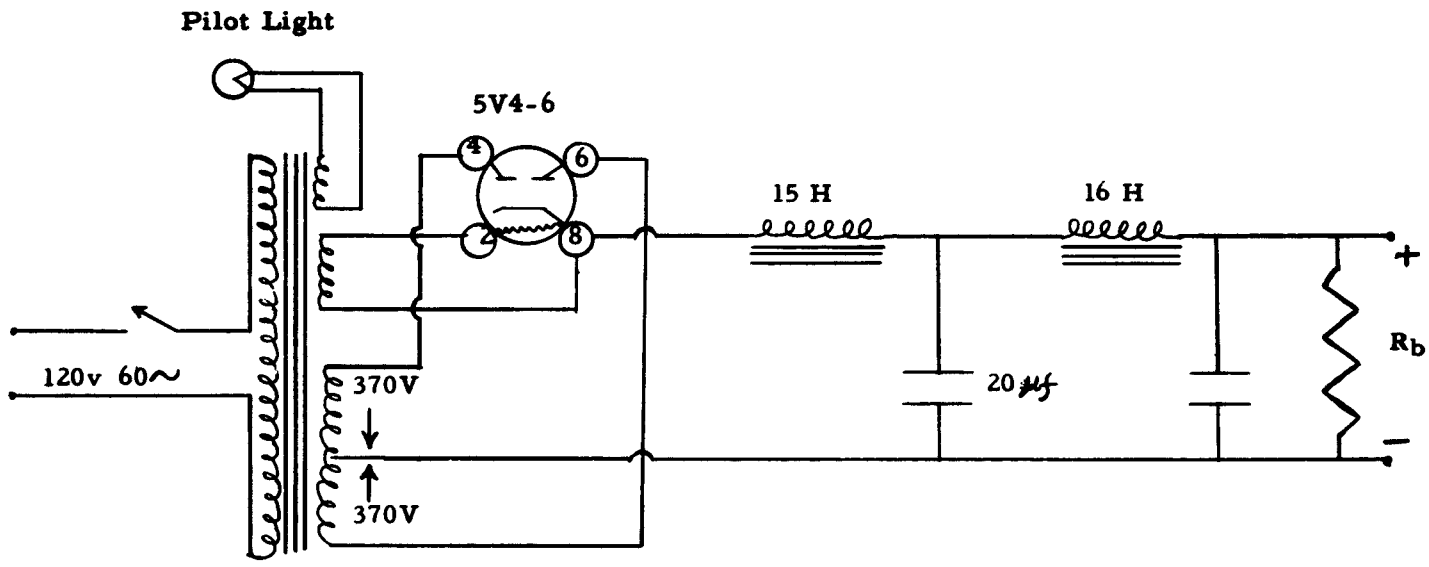

FIGURE II (Supplement)
DC CURRENT SUPPLY
For ARRSO

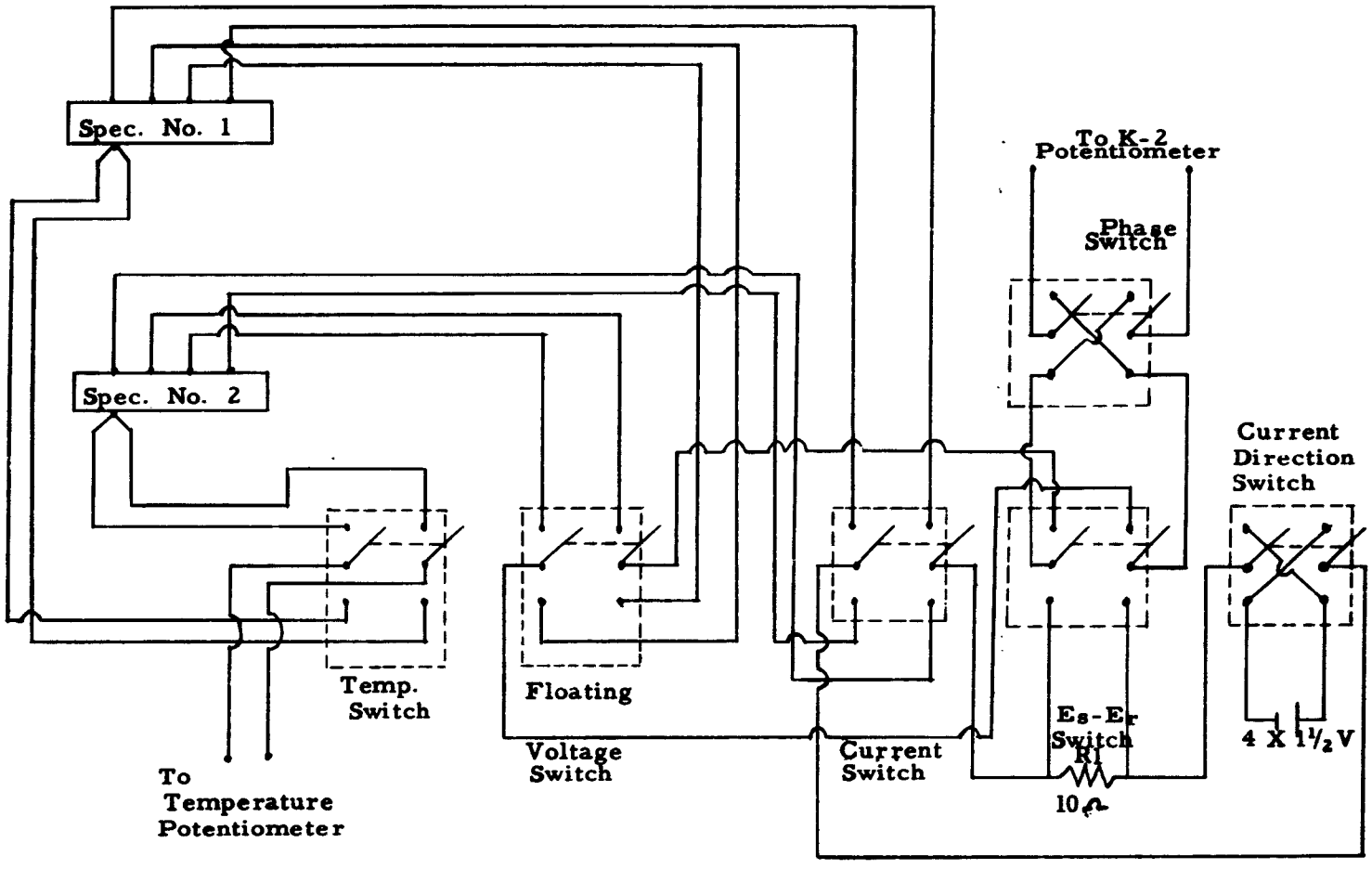

FIGURE III

CIRCUITRY FOR MANUAL MEASUREMENT OF RESISTIVITY

FIGURE IV

AUTOMATIC SEEBECK COEFFICIENT MEASURING APPARATUS

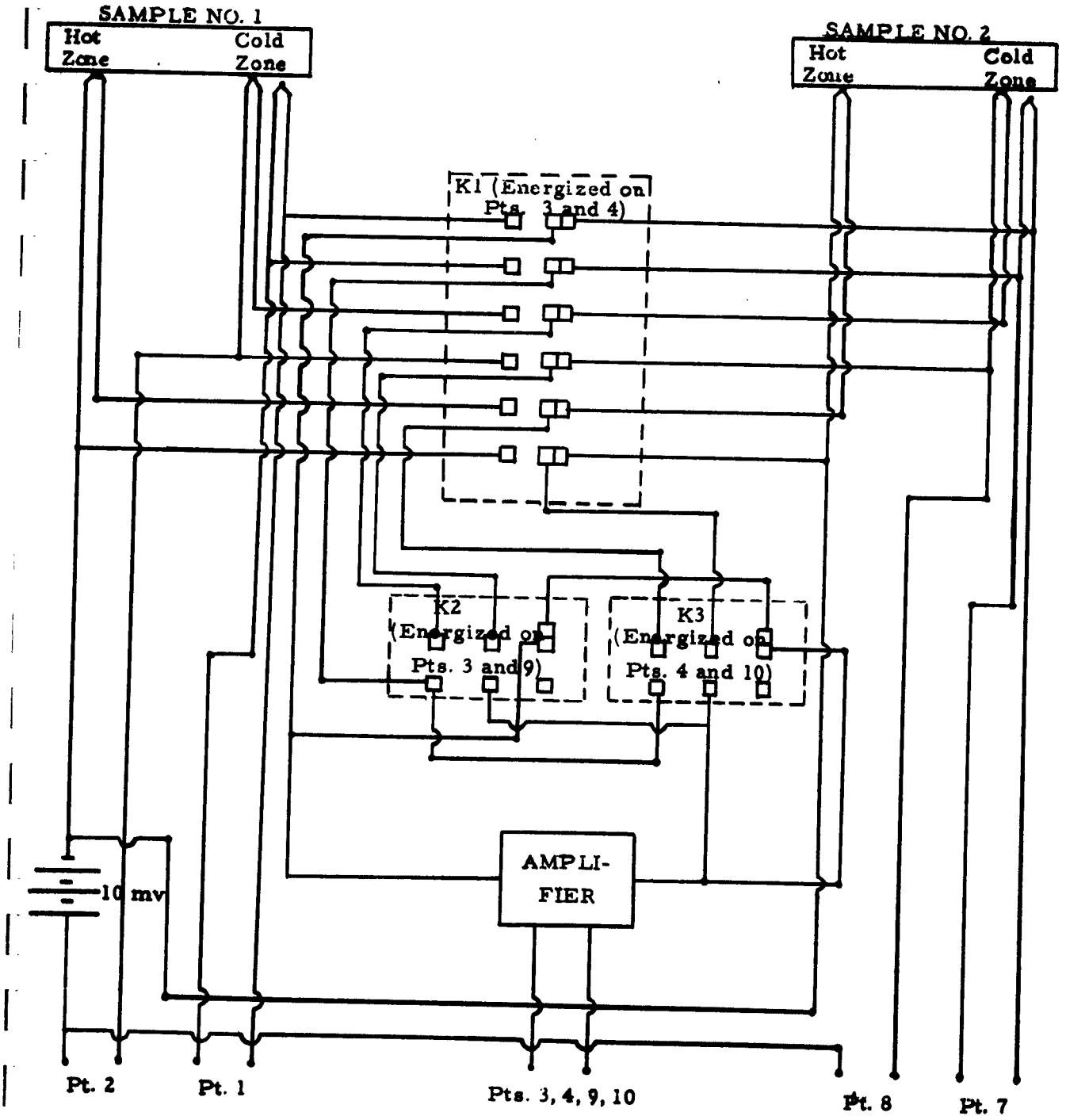

FIGURE V

MODIFIED CIRCUITRY FOR SKINNER THERMAL COMPARATOR

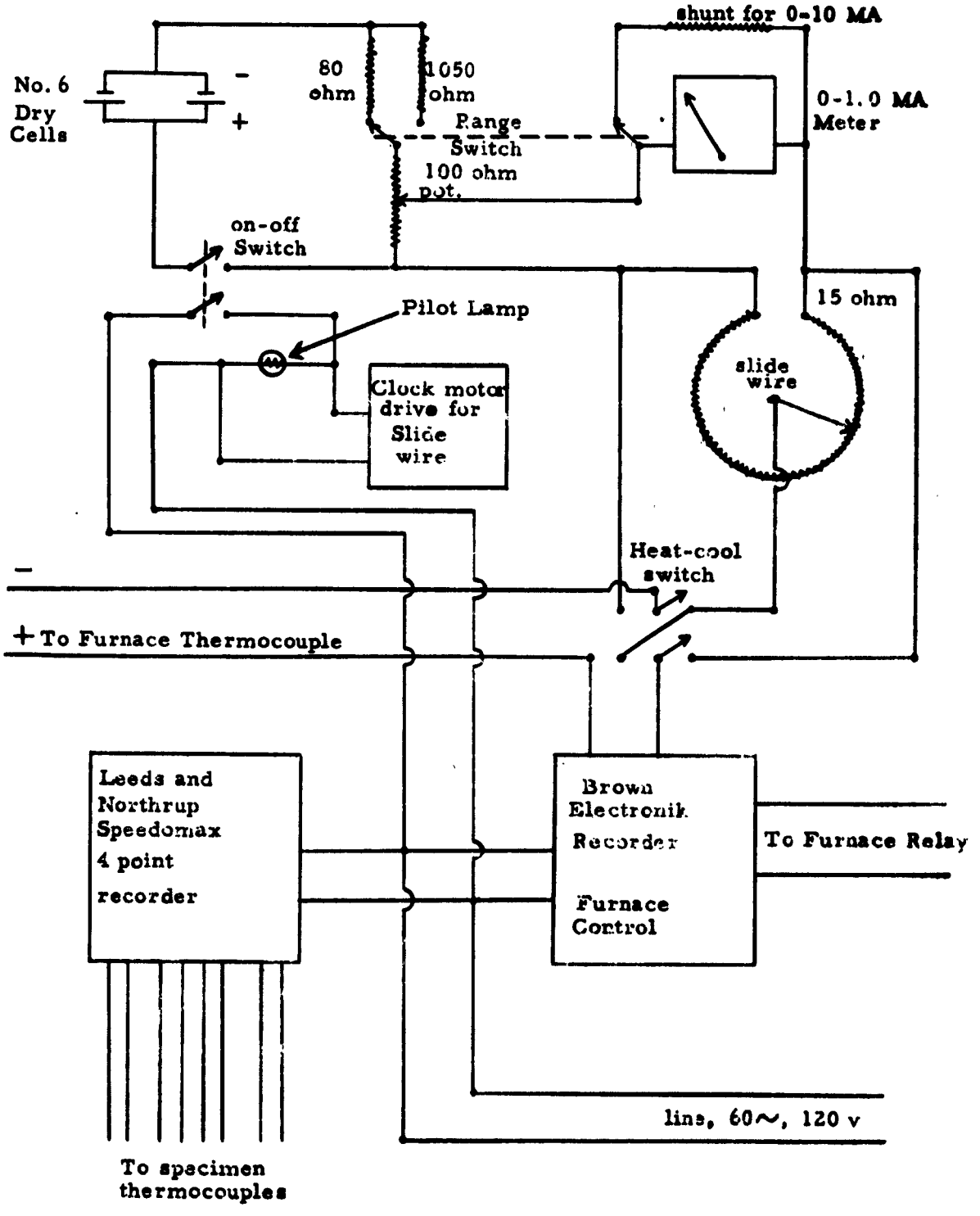

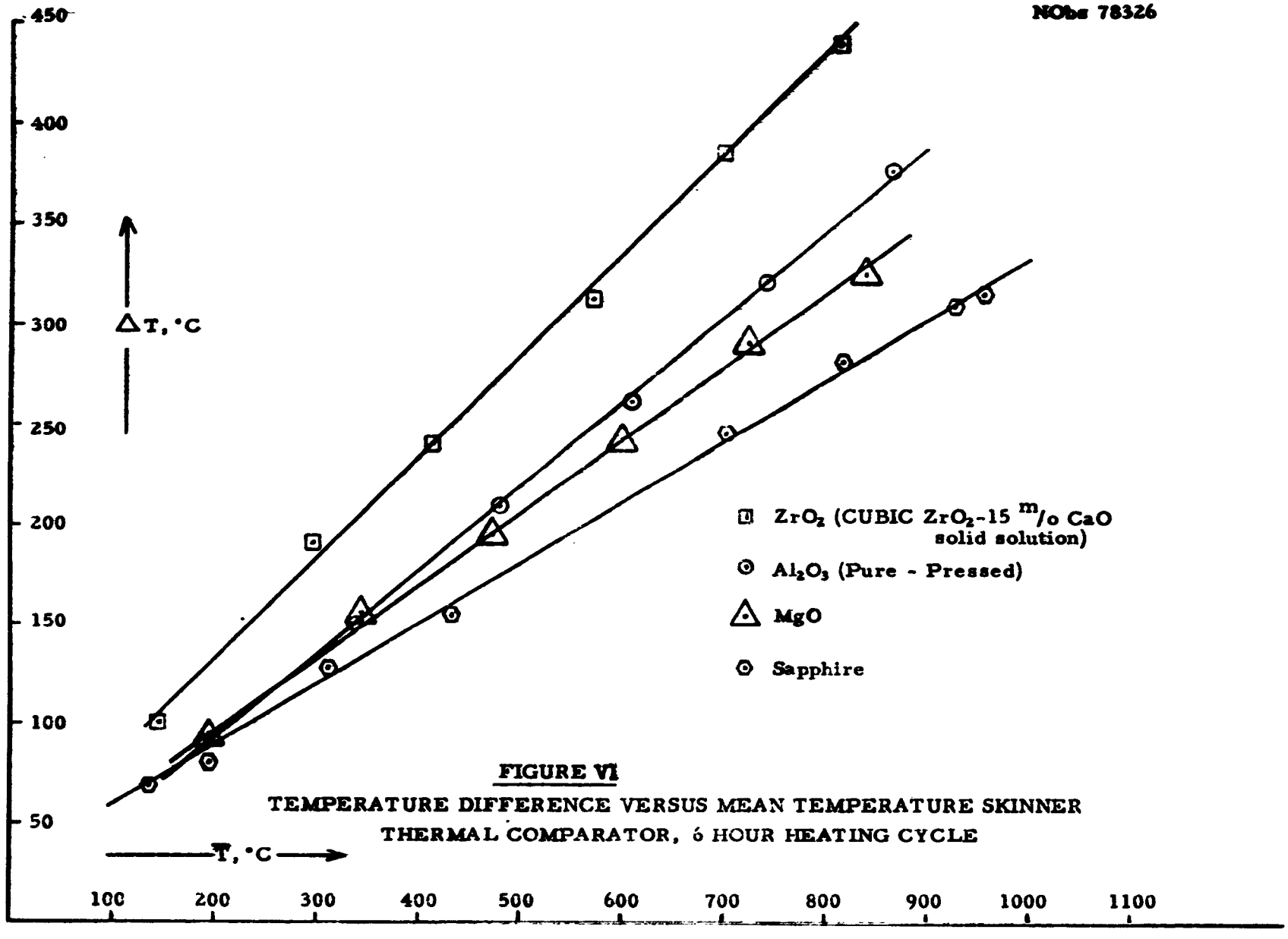

FIGURE VI

TEMPERATURE DIFFERENCE VERSUS MEAN TEMPERATURE SKINNER THERMAL COMPARATOR, 6 HOUR HEATING CYCLE

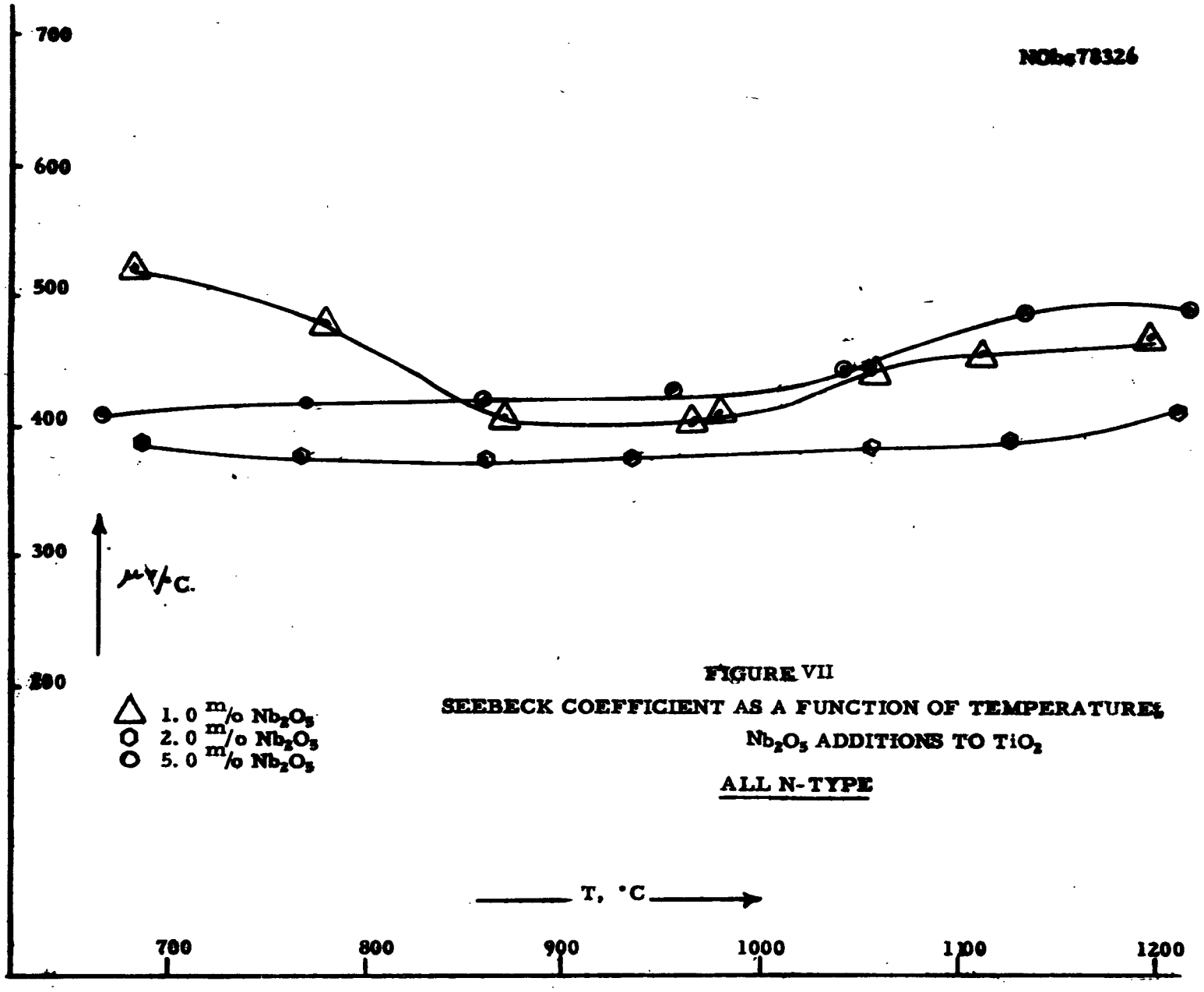

FIGURE VII

SEEBECK COEFFICIENT AS A FUNCTION OF TEMPERATURE, Nb_2O_5 ADDITIONS TO TiO_2

ALL N-TYPE

FIGURE VIII

ELECTRICAL RESISTIVITY AS A FUNCTION OF TEMPERATURE
Nb_2O_5 ADDITIONS TO TiO_2

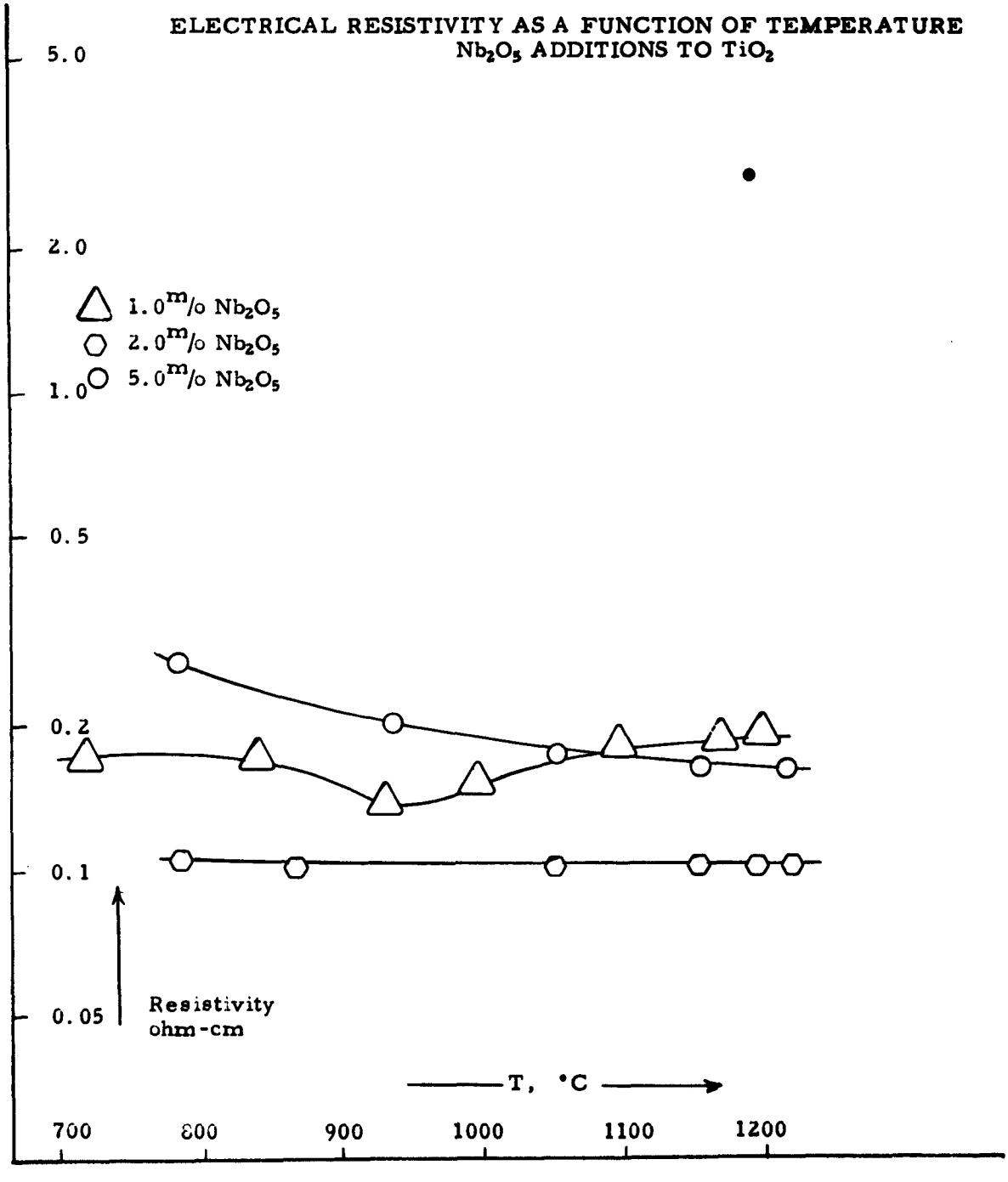

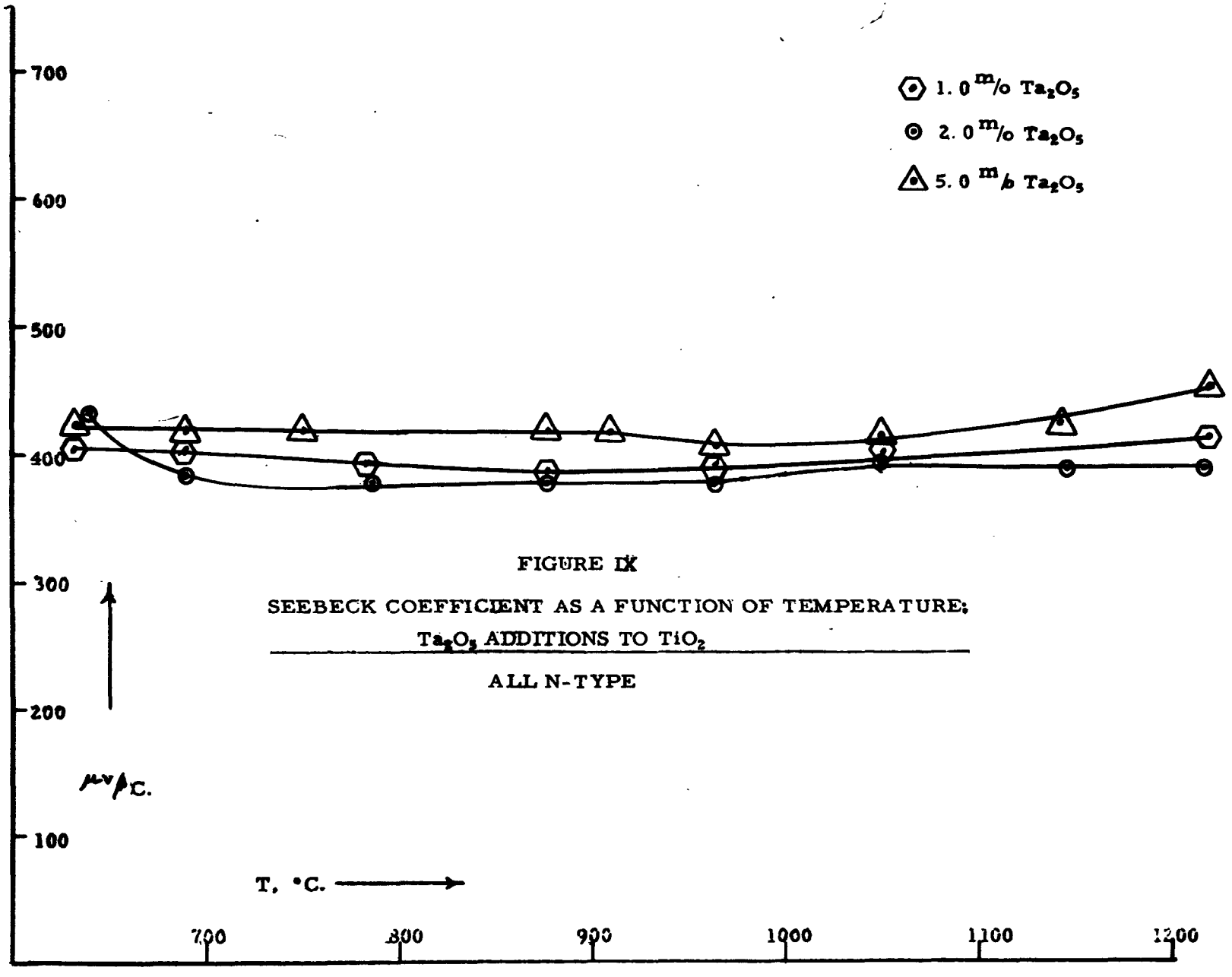

FIGURE IX

SEEBECK COEFFICIENT AS A FUNCTION OF TEMPERATURE:

Ta_2O_5 ADDITIONS TO TiO_2

ALL N-TYPE

FIGURE X

ELECTRICAL RESISTIVITY AS A FUNCTION OF TEMPERATURE; Ta_2O_5 ADDITIONS TO TiO_2

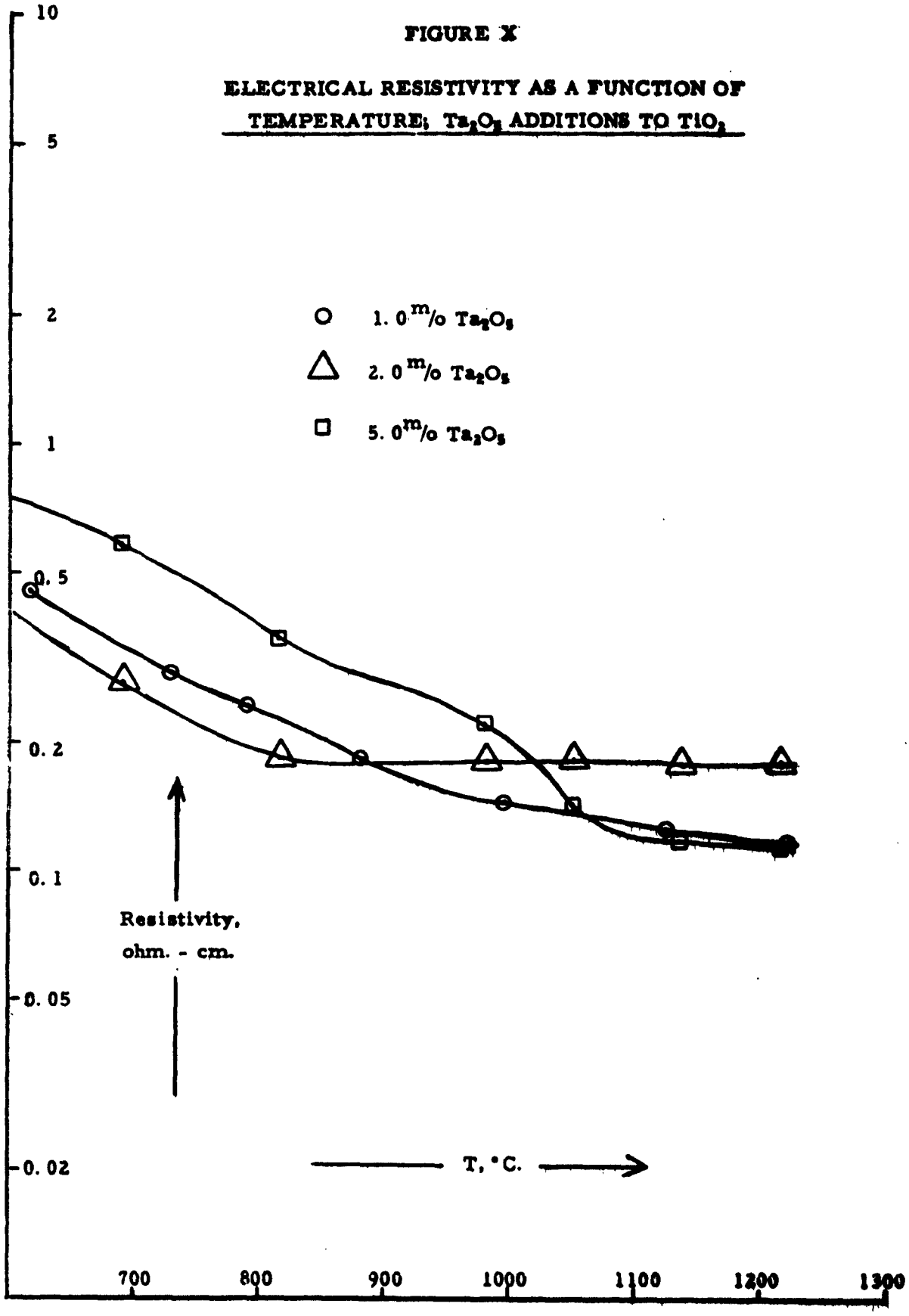

APPENDIX

TABLE AI

Summary of Ceramic and Electrical Properties of Simple Oxides

Base Material	Addition	Sintering Conditions Temp.	Sintering Conditions Time	Bulk Density	Porosity	Temperature	Seebeck Coefficient	Resistivity	Conduction
TiO_2		2600°F	3 hrs	4.05 g/cm³	0.096%	1218°C	-551 μv/°C	>5 ohm-cm	electronic
						960	-134		uncertain
						852	0		
						816	+100		
	0.1 m/o Sb_2O_3	2600°F	3 hrs	4.21	0.000	to 700	erratic, ±		electronic
						870	+825		uncertain
						1054	0		
						1200	-550	>5	
	0.2 m/o Sb_2O_3	2600°F	3 hrs	4.19	0.000	704	-457		electronic
						870	-435		uncertain
						1182	-370	>5	
	0.5 m/o Sb_2O_3	2600°F	3 hrs	4.17	0.015	690	-627		electronic
						968	-608		
						1122	-605		
						1244	-609	0.74	
	1.0 m/o Sb_2O_3	2600°F	3 hrs	4.12	0.11	690	-482		electronic
						880	-491		
						1050	-489		
						1244	-480	0.26	
	2.0 m/o Sb_2O_3	2600°F	3 hrs	3.57	12.25	732	-815		electronic
						934	-550		
						946		2.35	
						1100		0.78	
						1106	-250		
						1220		0.39	
	5.0 m/o Sb_2O_3	2600°F	3 hrs	3.80	9.21	694	-671		electronic
						906	-531		
						980		1.12	
						1050	-450		
						1072		0.69	
						1236		0.38	

APPENDIX

TABLE AI (continued)

Summary of Ceramic and Electrical Properties of Simple Oxides

Base Material	Addition	Sintering Conditions Temp.	Sintering Conditions Time	Bulk Density	Porosity	Temperature	Seebeck Coefficient	Resistivity	Conduction
TiO_2	0.1 m/o La_2O_3	2400°F	3 hrs	4.39	0.031	874	0		electronic
						928	+1018		uncertain
						1100	0		
						1220	-380	>5	
	0.2 m/o La_2O_3	2400°F	3 hrs	4.42	0.018	1040	0		electronic
						1220	-550	>5	uncertain
	0.5 m/o La_2O_3	2400°F	3 hrs	4.46	0.028	766	0		electronic
						946	+605		uncertain
						1118	0		
						1220	-213	>5	
	1.0 m/o La_2O_3	2400°F	3 hrs	4.52	0.034	765	0		electronic
						829	+1680		uncertain
						1050	0		
						1220	-540	>5	
	2.0 m/o La_2O_3	2500°F	3 hrs	4.29	0.007	928	+1060		electronic
						1082	0		uncertain
						1220	-540	>5	
	5.0 m/o La_2O_3	2600°F	3 hrs	4.45	0.000	820	0		electronic
						910	+820		uncertain
						1050	0		
						1220	-400	>5	
		2600°F	1¾ hrs	4.05	0.000	1218	-500	>5	electronic
						1054	0		uncertain
						1038	+116		
						942	+844		
	0.1 m/o SnO_2	2600°F	1⅔ hrs	4.09	0.000	910	0		electronic
						964	+266		uncertain
						1102	0		
						1220	-360	>5	

TABLE AI (continued)

Summary of Ceramic and Electrical Properties of Simple Oxides

Base Material	Addition	Sintering Conditions Temp.	Sintering Conditions Time	Bulk Density	Porosity	Temperature	Seebeck Coefficient	Resistivity	Conduction
	0.2 m/o SnO_2	2600°F	1⅔ hrs	4.03	0.007	964	+565		electronic
						1050	0		uncertain
						1220	-370	>5	
	0.5 m/o SnO_2	2600°F	1⅔ hrs	4.03	0.033	893	0		electronic
						938	+348		uncertain
						1050	0		
						1236	-540	>5	
	1.0 m/o SnO_2	2600°F	1⅔ hrs	4.09	0.016	710	0		electronic
						928	+930		uncertain
						1050	0		
						1220	-425	>5	
	2.0 m/o SnO_2	2600°F	1⅔ hrs	3.98	0.90	820	0		electronic
						928	+620		uncertain
						1033	0		
						1220	-495	>5	
	5.0 m/o SnO_2	2600°F	1⅔ hrs	4.07	0.54	746	-780		electronic
						765	0		uncertain
						910	+910		
						1043	0		
						1220	-500	>5	
		2400°F	3 hrs	3.28	6.49	1224	-484	>5	electronic
						1118	0		uncertain
						976	+583		
						880	+698		
	0.1 m/o $LaPO_4$	2400°F	3 hrs	3.70	2.48	722	-692		electronic
						836	0		uncertain
						880	+200		
						1050	0		
						1220	-557	>5	

APPENDIX

TABLE AI (continued)

Summary of Ceramic and Electrical Properties of Simple Oxides

Base Material	Addition	Sintering Conditions Temp.	Sintering Conditions Time	Density	Porosity	Temperature	Seebeck Coefficient	Resistivity	Conduction
TiO_2	0.2 m/o $LaPO_4$	2400°F	3 hrs	3.92	5.93	to 600	erratic, neg.		electronic uncertain
						695	0		
						914	+1253		
						1156	0		
						1220	-166	>5	
	0.5 m/o $LaPO_4$	2400°F	3 hrs	3.77	7.60	to 700	erratic, neg.		electronic uncertain
						880	+1084		
						1080	0		
						1200	-410	>5	
	1.0 m/o $LaPO_4$	2400°F	3 hrs	3.80	0.161	770	-1149		electronic uncertain
						906	0		
						954	+55		
						994	0		
						1200	-532	>5	
	2.0 m/o $LaPO_4$	2400°F	3 hrs	3.47	17.41	to 600	erratic, neg.		electronic uncertain
						685	0		
						825	+565		
						1054	0		
						1220	-366	>5	
	5.0 m/o $LaPO_4$	2450°F	3 hrs	3.65	13.99	<825	erratic, ±	>5	electronic uncertain
						825	+571		
	0.1 Nb_2O_5	2400°F	3 hrs	3.76	2.71	to 700	erratic		electronic uncertain
						880	+400		
						994	0		
						1114	-450	>5	
	0.2 Nb_2O_5	2400°F	3 hrs	3.55	1.84	to 700	erratic, neg		electronic uncertain
						880	+280		
						994	0		
						1114	-485	>5	

APPENDIX
TABLE AI (continued)
Summary of Ceramic and Electrical Properties of Simple Oxides

Base Material	Addition	Sintering Conditions Temp.	Sintering Conditions Time	Density	Porosity	Temperature	Seebeck Coefficient	Resistivity	Conduction
TiO_2	0.5 Nb_2O_5	2400°F	3 hrs	3.55	1.49	to 700	erratic, neg		electronic
						896	-606		uncertain
						978	-450		
						1208	-880	> 5	
	1.0 Nb_2O_5	2400°F	3 hrs	3.51	18.2)				
	2.0 Nb_2O_5	2400°F	3 hrs	3.73	9.29)	See Figures VII, VIII			
	5.0 Nb_2O_5	2400°F	3 hrs	3.93	4.49)				
		2600°F	3 hrs	4.15	0.000	1232	-264	>5	electronic
						1206	0		uncertain
						1046	+1488		
						888	+1640		
	0.1 m/o Ta_2O_5	2600°F	3 hrs	4.03	0.000	914	+912		electronic
						1020	0		uncertain
						1208	-648	>5	
	0.2 m/o Ta_2O_5	2600°F	3 hrs	3.93	2.47	914	+505		electronic
						950	0		uncertain
						1208	-653	>5	
	0.5 m/o Ta_2O_5	2600°F	3 hrs	3.76	8.87	< 880	large		electronic
						880	erratic,	>5	uncertain
						1200	neg.		
	1.0 m/o Ta_2O_5	2600°F	3 hrs	4.27	0.000)				
	2.0 m/o Ta_2O_5	2600°F	3 hrs	4.50	0.000)	See Figures, IX, X			
	5.0 m/o Ta_2O_5	2600°F	3 hrs	4.52	1.65)				
	0.1 MgO_3	2400°F	3 hrs	4.14	0.29	1206	-1000	>5	electronic
						< 1206	very erratic		uncertain
	0.2 MgO_3	2400°F	3 hrs	3.87	4.65	732	-1150		electronic
						870	-1170		uncertain
						968	-1170		
						1224	-1070	>5	

APPENDIX

TABLE AI (continued)

Summary of Ceramic and Electrical Properties of Simple Oxides

Base Material	Addition	Sintering Conditions Temp.	Sintering Conditions Time	Density	Porosity	Temperature	Seebeck Coefficient	Resistivity	Conduction
	0.5 MoO_3	2400°F	3 hrs	3.82	8.27	732	-830		electronic
						870	-820		uncertain
						985	-1110		
						1219	-830	>5	
	1.0 MoO_3	2500°F	3 hrs	3.96	0.052	802	-988		electronic
						932	-1093		uncertain
						1038	-1000		
						1140	-1086	>5	
	2.0 MoO_3	2600°F	3 hrs	3.98	0.000	1206	-750	7.8	electronic
						< 1200	very large neg.		uncertain
	5.0 MoO_3	2600°F	3 hrs	4.10	0.000	770	-927	>5	electronic
						> 770	erratic, neg		uncertain
ZrO_2-15^m/o CaO Solid Solution		3000°F	2 hrs	4.52	17.50	680	-584		ionic,
						857	-565		uncertain
						950	-529		
						1080	-313		
						1230	-161	> 5	
	0.1^m/o Nb_2O_5	3000°F	2 hrs	4.58	17.36	750	-458		ionic
						760	-170		
						880	+820		
						1240	+508	4.45	
	0.2^m/o Nb_2O_5	3000°F	2 hrs	4.59	15.08	732	-525		ionic
						780	0		
						890	+1050		
						1230	+485	4.4	
	0.5^m/o Nb_2O_5	3000°F	2 hrs	4.57	16.57	840	-530		ionic
						890	+1000		
						1230	+544	4.58	

TABLE AI (continued)

Summary of Ceramic and Electrical Properties of Simple Oxides

Base Material	Addition	Sintering Conditions Temp.	Sintering Conditions Time	Density	Porosity	Temperature	Seebeck Coefficient	Resistivity	Conduction
	1.0 m/o Nb_2O_5	3000°F	2 hrs	4.68	15.29	656	-450		ionic
						732	-120		
						825	+1140		
						1230	+470	3.48	
	2.0 m/o Nb_2O_5	3000°F	2 hrs	4.88	1.73	656	-1240		ionic
						732	-79		uncertain
						825	+1560		
						1230	+490	>5	
	5.0 m/o Nb_2O_5	3000°F	2 hrs	5.05	7.97	610	-1060		ionic
						742	-178		uncertain
						960	+1370		
						1230	+1010	> 5	
	0.1 m/o La_2O_3	3000°F	2 hrs	4.60 g/cm³	15.56	722	-306		ionic
						788	-67		
						840	+750		
						942	+666		
						1200		4.78	
	0.2 m/o La_2O_3	3000°F	2 hrs	4.58	15.51	722	-454		ionic
						840	-38		
						870	+811		
						1218	+505	5.56	
	0.5 m/o La_2O_3	3000°F	2 hrs	4.59	15.77	788	erratic, ±		ionic
						906	+1542		
						1050	+700		
						1208	+528	5.2	
	1.0 m/o La_2O_3	3000°F	2 hrs	4.58	16.51	840	-1124		ionic
						850	-54		
						906	+978		
						990	+578		
						1200		5.5	

APPENDIX

TABLE AI (continued)

Summary of Ceramic and Electrical Properties of Simple Oxides

Base Material	Addition	Sintering Conditions Temp.	Sintering Conditions Time	Density	Porosity	Temperature	Seebeck Coefficient	Resistivity	Conduction
	2.0 m/o La_2O_3	3000°F	2 hrs	4.66	16.04	650	-323		ionic
						728	-29		
						1190	+554	5.65	
	5.0 m/o La_2O_3	3000°F	2 hrs	4.32	20.39	656	-610		ionic uncertain
						765	-32		
						980	+560	>5	
ZrO_2-7 m/o Y_2O_3 Solid Solution	0.1 m/o La_2O_3	3000°F	2 hrs	4.86	15.28	760	+1106		ionic
						860	+1901		
						964	+641		
						1100	+866		
						1206	+695	4.03 ohm-cm	
	0.2 m/o La_2O_3	3000°F	2 hrs	4.85	15.15	964	-3333		ionic
						1020	-3040		
						1100	-1264		
						1140	-13		
						1206	+181	4.5	
	0.5 m/o La_2O_3	3000°F	2 hrs	4.92	14.85	856	-1290		ionic
						892	0		
						1000	+490		
						1080	+516		
						1156	+521	>5	
	1.0 m/o La_2O_3	3000°F	2 hrs	4.96	14.52	820	+1315		ionic uncertain
						856	+961		
						892	+690		
						1000	+590		
						1156	+544	> 5	
	2.0 m/o La_2O_3	3000°F	2 hrs	5.14	12.91	806	-1164		ionic
						834	-11		
						860	+324		
						960	+465		
						1198	+550	4.65	

APPENDIX

TABLE AI (continued)

Summary of Ceramic and Electrical Properties of Simple Oxides

Base Material	Addition	Sintering Conditions Temp.	Sintering Conditions Time	Density	Porosity	Temperature	Seebeck Coefficient	Resistivity	Conduction
	5.0 m/o La_2O_3	3000°F	2 hrs	5.09	9.54	834	+816		ionic
						860	+910		
						960	+582		
						1200		4.17	
	4 m/o La_2O_3	3000°F	2 hrs	5.24	7.0	<843	erratic, neg		ionic uncertain
						924	0		
						950	+1410		
						1140	>+1720	> 5	
	7 m/o La_2O_3	3000°F	2 hrs	5.33	3.8	870	>+2000		ionic uncertain
						950	+861		
						1046	+1500		
						1122	+2700	>5	
	10 m/o La_2O_3	3000°F	2 hrs	5.55	0.6	< 797	erratic, neg		ionic uncertain
						906	+1000		
						994	+1180		
						1097	+3070	>5	
	0.1 m/o Nb_2O_5	3000°F	2 hrs	4.96 g/cm³	12.36	792°C	0 μV/°C		ionic uncertain
						920	+1769		
						1210	+914	>5	
	0.2 m/o Nb_2O_5	3000°F	2 hrs	4.99	11.51	to 900	erratic, pos		ionic uncertain
						946	0		
						982	-84		
						1016	0		
						1210	+38	>5	
	0.5 m/o Nb_2O_5	3000°F	2 hrs	5.00	11.92	650	0		ionic uncertain
						784	+1209		
						1220	+427	> 5	
	1.0 m/o Nb_2O_5	3000°F	2 hrs	5.03	11.26	837	0		ionic uncertain
						856	+1117		
						1220	+736	>5	

TABLE AI (continued)

Summary of Ceramic and Electrical Properties of Simple Oxides

Base Material	Addition	Sintering Conditions Temp.	Sintering Conditions Time	Density	Porosity	Temperature	Seebeck Coefficient	Resistivity	Conduction
	2.0 m/o Nb_2O_5	3000°F	2 hrs	5.21	7.38	838	0		ionic
						874	+700		uncertain
						1220	+1095	>5	
	5.0 m/o Nb_2O_5	3000°F	2 hrs	5.46	0.013	750	-	2962	ionic
						788	-	2030	
						<800	erratic, neg	-	
						811	0	-	
						898	-	766	
						978	-	420	
						998	> +2300	-	
						1080	-	187	
						1170	-	111	
						1200	-	97.7	
						1220	+213		
	4.0 m/o Nb_2O_5	3000°F	2 hrs	5.60	0.013	<986	erratic, pos		electronic uncertain
						986	0		
						1038	-950		
						1156	> |-147|	1.78	
	7.0 m/o Nb_2O_5	3000°F	2 hrs	4.85	14.7	<924	erratic, neg		ionic
						924	0		uncertain
						950	+355		
						1097	> +1785	>5	
	10.0 m/o Nb_2O_5	3000°F	2 hrs	4.97	13.4	<770	erratic, neg		ionic
						770	0		uncertain
						825	+1064		
						880	> +1176		
						1002	> +1538		
						1140	> +1612	> 5	

APPENDIX

TABLE AI (continued)

Summary of Ceramic and Electrical Properties of Simple Oxides

Base Material	Addition	Sintering Conditions Temp.	Sintering Conditions Time	Density	Porosity	Temperature	Seebeck Coefficient	Resistivity	Conduction
ZrO_2-17 m/o CeO_2 Solid Solution	0.1 m/o La_2O_3	3000°F	2 hrs	5.70	3.61	722	-1106		ionic
						770	0		uncertain
						890	+3225		
						1240	+9000	>5	
	0.2 m/o La_2O_3	3000°F	2 hrs	5.56	4.99	erratic results thru out			unknown
	0.5 m/o La_2O_3	3000°F	2 hrs	5.69	3.26	790	0		ionic
						924	+2044		uncertain
						1250	+630	> 5	
	1.0 m/o La_2O_3	3000°F	2 hrs	5.64	3.57	915	+639		ionic
						1250	+664	>5	uncertain
	2.0 m/o La_2O_3	3000°F	2 hrs	5.44	3.81	915	+2631		ionic
						1250	+630	>5	uncertain
	5.0 m/o La_2O_3	3000°F	2 hrs	5.47	4.06	860	+1470		ionic
						1250	+370	>5	uncertain
	0.1 m/o Nb_2O_5	3000°F	2 hrs	5.58	3.58	798	-213		ionic
						968	>+3600		uncertain
						1093	+1153		
						1190	-1800	>5	
	0.2 m/o Nb_2O_5	3000°F	2 hrs	5.52	4.08	<1100	very large neg		electronic
						1118	-3800		uncertain
						1182	-1300	>5	
	0.5 m/o Nb_2O_5	3000°F	2 hrs	5.60	4.37	<732	erratic, neg		electronic
						852	>|-787|		uncertain
						976	>|-877|		
						1114	>|-1000|	>5	
	1.0 m/o Nb_2O_5	3000°F	2 hrs	5.42	8.2	906	-589		electronic
						1034	-882		uncertain
						1150	-833		
						1223	-545	>5	

APPENDIX

TABLE AI (continued)

Summary of Ceramic and Electrical Properties of Simple Oxides

Base Material	Addition	Sintering Conditions Temp.	Sintering Conditions Time	Density	Porosity	Temperature	Seebeck Coefficient	Resistivity	Conduction
	2.0 m/o Nb_2O_5	Failed							
	5.0 m/o Nb_2O_5	Failed							

Base Material	Addition	Sintering Conditions Temp.	Sintering Conditions Time	Sintering Conditions Atmosphere	Shrinkage	Temp. °C	Seebeck Coefficient	Resistance
ZrO_2	55 m/o $ZrH_{1.33}$	2200°F	4 hrs	argon	8.85%	784	erratic,	0.008 ohms
						960	ΔT too	0.012
						1140	large	0.011
						1219		0.007
	50 m/o $ZrH_{1.33}$	2200°F	4 hrs	argon	9.10	646	+12.7	
						714	+16.4	0.021
						806	+11.4	
						875		0.017
						1050		0.020
						1219		0.013
	45 m/o $ZrH_{1.33}$	2200°F	4 hrs	argon	9.60	1218	unreliable specimen oxidized	0.006
	40 m/o $ZrH_{1.33}$	2200°F	4 hrs	argon	9.60		specimen oxidized	

TABLE AI (continued)

Summary of Ceramic and Electrical Properties of Simple Oxides

Base Material	Addition	Sintering Conditions Temp	Sintering Conditions Time	Bulk Density	Porosity	Temperature	Seebeck Coefficient	Resistivity	Conduction
CeO_2		3000°F	2 hrs	6.56	0	<814	erratic, ±		uncertain
						814	0		
						850	+431		
						938	0		
						1086	-489		
						1220	-575	>5.00	
	0.1 m/o Nb_2O_5	2900°F	2 hrs	7.14	28.17	596	-780		electronic
						692	-786		uncertain
						878	-796		
						1054	-729		
						1214	-669	~5	
	0.2 m/o Nb_2O_5	2900°F	2 hrs	6.98	17.59	694	-700		electronic
						878	-760		uncertain
						1010	-615		
						1205	-710	>5	
	0.5 m/o Nb_2O_5	2900°F	2 hrs	5.87	16.57	606	-625		electronic
						786	-604		
						931	-647		
						1205	-717	3.05	
	1.0 m/o Nb_2O_5	2900°F	2 hrs	5.90	14.82	596	-625		electronic
						786	-588		
						913	-587		
						1188	-595	1.66	
	2.0 m/o Nb_2O_5	2900°F	2 hrs	5.98	10.66	596	-457		electronic
						692	-456		
						878	-496		
						1054	-504		
						1088		1.24	
						1214	< -527	0.73	

TABLE AI (continued)

Summary of Ceramic and Electrical Properties of Simple Oxides

Base Material	Addition	Sintering Conditions Temp.	Sintering Conditions Time	Bulk Density	Porosity	Temperature	Seebeck Coefficient	Resistivity	Conduction
	5.0 m/o Nb_2O_5	2900°F	2 hrs	6.10	1.69	616	-455		electronic
						730	-450		
						817	-433		
						958	-466		
						1153		1.13	
						1205	-482		
	3 m/o Nb_2O_5	3000°F	2 hrs	6.07	1.40	728	-450		electronic
						760		5.05	
						806	-438		
						950		1.55	
						960	-424		
						1050		0.90	
						1097	-500		
						1173		0.69	
	4.0 m/o Nb_2O_5	2900°F	2 hrs	5.79	5.42	732	-515		electronic
						806	-504		
						880	-512		
						986		1.56	
						1004	-523		
						1080		1.32	
						1120	-522		
						1198		1.13	
CeO_2	0.1 m/o La_2O_3	2900°F	2 hrs	5.88	16.85	740	0		mixed uncertain
						795	+3		
						859	0		
						904	+188		
						1013	0		
						1053	-129	>5	
						1220	-529		

TABLE AI (continued)

Summary of Ceramic and Electrical Properties of Simple Oxides

Base Material	Addition	Sintering Conditions Temp.	Sintering Conditions Time	Bulk Density	Porosity	Temperature	Seebeck Coefficient	Resistivity	Conduction
	0.2 m/o La_2O_3	2900°F	2 hrs	4.90	16.21	740	-800		mixed
						805	0		uncertain
						878	+940		
						940	+614		
						1112	0		
						1172	-277	>5	
	0.5 m/o La_2O_3	2900°F	2 hrs	6.25	8.47	654	-120		mixed
						692	-416		uncertain
						786	0		
						823	+168		
						913	+412		
						1019	+427		
						1171	0		
						1208	> |-109|	>5	
	1.0 m/o La_2O_3	2900°F	2 hrs	5.86	17.66	692	-189		mixed
						823	0		uncertain
						913	+374		
						1035	+311		
						1188	0		
						1208	-30	>5	
	2.0 m/o La_2O_3	2900°F	2 hrs	5.62	24.39	832	0		mixed
						841	+303		uncertain
						1101	+386		
						1104	+333		
						1238	< |+159|	> 5	
	5.0 m/o La_2O_3	2900°F	2 hrs	4.80	46.38	832	0		ionic
						841	+466		uncertain
						1101	+423		
						1104	+584		
						1238	< |+691|	> 5	

APPENDIX

TABLE AI (continued)

Summary of Ceramic and Electrical Properties of Simple Oxides

Base Material	Addition	Sintering Conditions Temp.	Sintering Conditions Time	Bulk Density	Porosity	Temperature	Seebeck Coefficient	Resistivity	Conduction
CeO_2	0.1 m/o Y_2O_3	2900°F	2 hrs	6.01	12.59	694	-361		mixed uncertain
						820	0		
						860	+281		
						1018	+143		
						1053	0		
						1250	<|-510|	>5	
	0.2 m/o Y_2O_3	2900°F	2 hrs	6.10	9.30	< 692	erratic $\pm$		mixed uncertain
						692	0		
						730	-302		
						841	0		
						966	+382		
						1138	0		
						1170	-119		
						1220	<|-262|	> 5	
	0.5 m/o Y_2O_3	2900°F	2 hrs	6.38	2.47	<823	erratic $\pm$		ionic uncertain
						823	+194		
						860	+276		
						966	+277		
						1120	+217	>5	
	1.0 m/o Y_2O_3	2900°F	2 hrs	6.29	5.38	Failed in test			
	2.0 m/o Y_2O_3	2900°F	2 hrs	5.65	22.96	823	-101		ionic uncertain
						860	0		
						949	+382		
						1138	+478	>5	
	5.0 m/o Y_2O_3	2900°F	2 hrs	5.93	14.24	<692	erratic neg		ionic
						692	-360		
						786	0		
						878	+379		
						1001	+388		
						1151		5.75	
						1185		4.45	
						1218	+309	3.99	
						1233		3.64	

TABLE AI (continued)

Summary of Ceramic and Electrical Properties of Simple Oxides

Base Material	Addition	Sintering Conditions Temp.	Sintering Conditions Time	Bulk Density	Porosity	Temperature	Seebeck Coefficient	Resistivity	Conduction
	$7^m/o$ Y_2O_3	3000°F	2 hrs	5.64	15.5	942	+366		ionic
						1020	+263		
						1140	+375		
						1223	+331	5.1	
	$10^m/o$ Y_2O_3	3000°F	2 hrs	5.19	20.7	960	+519		ionic
						1084	-61		
						1140	+41		
						1198	+294		
						1223		5.0	

Base Material	Addition	Firing Conditions Temp.	Firing Conditions Time	Firing Conditions Atmosphere	Shrinkage	Temp °C	Seebeck Coefficient	Resistivity ohm-cm
CeO_2	$0.1^m/o$ UO_2	2200°F	2 hrs	argon	0.65	all temps	very large and erratic	>5
	$0.2^m/o$ UO_2	2200°F	2 hrs	argon	0.65	all temps	very large and erratic	> 5
	$0.5^m/o$ UO_2	2200°F	2 hrs	argon	0.45	all temps	very large and erratic	>5
	$1.0^m/o$ UO_2	2200°F	2 hrs	argon	0.5	all temps	very large and erratic	>5
	$2.0^m/o$ UO_2	2200°F	2 hrs	argon	0.7	all temps	very large and erratic	>5
	$5.0^m/o$ UO_2	2200°F	2 hrs	argon	0.7	508°C only reading that could be obtained	+361	>5

APPENDIX

TABLE AII

Summary of Ceramic and Electrical Properties of Lithium Metatitanate and Its Analogues

Base Material	Addition	Sintering Conditions Temp.	Sintering Conditions Time	Bulk Density	Porosity	Temperature	Seebeck Coefficient	Resistivity	Conduction
Li_2TiO_3		2400°F	3 hrs	3.86 g/cm³	3.27%	<800°C	erratic, neg.		ionic,
						950	+2173uv/°C		uncertain
						1050	+2514		
						1215	+1459	>5 ohm-cm	
	0.1 m/o ZnO	2400°F	3 hrs	2.82	14.7	<800	erratic, neg.		mixed,
						950	+2040		uncertain
						981	0		
						1135	-588		
						1215	-1172	>5	
	0.2 m/o ZnO	2400°F	3 hrs	2.85	15.1	<800	erratic, neg.		ionic
						950	+1639		uncertain
						1215	+326	>5	
	0.5 m/o ZnO	2400°F	3 hrs	2.85	13.4	700	erratic, neg.		ionic
						978	+2000		uncertain
						1215	+87	>5	
	1.0 m/o ZnO	2400°F	3 hrs	2.87	13.7	700	erratic, neg.		ionic
						980	+1100		uncertain
						1215	+1300	>5	
	2.0 m/o ZnO	2400°F	3 hrs	2.90	11.8)	(~700	erratic,		
					)	(	large neg.		
					)	(~1000	erratic,	>5	unknown
					)	(	large pos.		
	5.0 m/o ZnO	2400°F	3 hrs	2.93	12.3)	(~1200	erratic,		
					)	(	large neg.		
	0.1 m/o MgO	2400°F	3 hrs	3.03	12.7	<950	erratic, pos.		ionic,
						950	0		uncertain
						1012	+779		
						1152	+897	>5	

APPENDIX

TABLE AII (continued)

Summary of Ceramic and Electrical Properties of Lithium Metatitanate and Its Analogues

Base Material	Addition	Sintering Conditions Temp.	Sintering Conditions Time	Bulk Density	Porosity	Temperature	Seebeck Coefficient	Resistivity	Conduction
Li_2TiO_3	0.2 m/o MgO	2400°F	3 hrs	2.85 g/cm³	13.2	<870	erratic, neg.		mixed, uncertain
						870	0		
						916	>+775		
						1190	>+1490	>5 ohm-cm	
	0.5 m/o MgO	2400°F	3 hrs	3.15	11.3	<914	erratic, pos.		ionic, uncertain
						914	>+1470		
						986	>+770		
						1080	+1085	>5	
	1.0 m/o MgO	2400°F	3 hrs	2.88	10.2	<968	erratic, neg.		mixed, uncertain
						968	0		
						1140	+1094	>5	
	2.0 m/o MgO	2400°F	3 hrs	2.87	11.3	<704	erratic, neg.		mixed, uncertain
						704	0		
						820	+456		
						942	>+825		
						1206	>+925	>5	
	5.0 m/o MgO	2400°F	3 hrs	2.88	12.3	<723	erratic, pos.		ionic uncertain
						723	>+943		
						924	>+1100		
						1122	+1017	>5	
	0.1 m/o SnO	2400°F	3 hrs	2.83	15.2	<852	erratic, neg.		electronic, uncertain
						852	-1175		
						1046	-1130		
						1173	-24	>5	
	0.2 m/o	2400°F	3 hrs	2.83	13.4	<746	erratic, neg		ionic uncertain
						746	0		
						861	>+1220		
						1028	>+1785		
						1164	>+1960	>5	

APPENDIX

TABLE AII (continued)

Summary of Ceramic and Electrical Properties of Lithium Metatitanate and Its Analogues

Base Material	Addition	Sintering Conditions Temp.	Sintering Conditions Time	Bulk Density	Porosity	Temperature	Seebeck Coefficient	Resistivity	Conduction
Li_2TiO_3	0.5 m/o SnO	2400°F	3 hrs	2.86	12.6	< 788	erratic +		ionic
						893	> + 1350 −		uncertain
						1020	> + 2222		
						1168	> + 1695	> 5 ohm-cm	
	1.0 m/o SnO	2400°F	3 hrs	2.89	11.3	< 843	erratic, neg		electronic,
						843	> |-1315|		uncertain
						959	-3480		
						1207	-253	> 5	
	2.0 m/o SnO	2400°F	3 hrs	2.95	8.5	< 843	erratic, neg		ionic,
						843	> +2600		uncertain
						888	> +2440		
						1046	> +1200		
						1198	> +952	> 5	
	5.0 m/o SnO	2400°F	3 hrs	3.04	5.1	742	-282		electronic,
						870	-297		uncertain
						981	-276		
						1063	-277		
						1164	-305	> 5	
	0.1 m/o NiO	2400°F	3 hrs	2.83	14.6	820	erratic, neg.		ionic
						843	> +1043		uncertain
						875	> +1000	> 5	
	0.2 m/o NiO	2400°F	3 hrs	2.83	14.4	816	erratic, +		ionic
						875	> +1470 −		uncertain
						1003	> +2220		
						1164	> +5000		
	0.5 m/o NiO	2400°F	3 hrs	2.83	14.5	< 676	erratic, neg.		ionic
						732	> +1053		uncertain
						932	> +1265		
						1046	> +1493		
						1156	> +1515	> 5	

APPENDIX

TABLE AII (continued)

Summary of Ceramic and Electrical Properties of Lithium Metatitanate and Its Analogues

Base Material	Addition	Sintering Conditions Temp.	Sintering Conditions Time	Bulk Density g/cm³	Porosity	Temperature	Seebeck Coefficient	Resistivity	Conduction
Li_2TiO_3	1.0 m/o NiO	2400°F	3 hrs	2.84	14.5	820	erratic, neg.		mixed,
						895	+1077		uncertain
						976	0		
						1173	-536	>5 ohm-cm	
	2.0 m/o NiO	2400°F	3 hrs	2.83	15.6	<816	erratic, neg.		ionic,
						976	+1960		uncertain
						1182	+2630	>5	
	5.0 m/o NiO	2400°F	3 hrs	2.83	16.5	<816	erratic, neg.		mixed,
						932	+2100		uncertain
						1046	0		
						1063	-1667		
						1190	-311	>5	
	0.1 m/o Bi_2O_3	2200°F	2 hrs	2.99	2.63	<916	erratic, neg.		mixed,
						916	-980		uncertain
						1124	0	>5	
	0.2 m/o Bi_2O_3	2200°F	2 hrs	2.97	3.56	842	erratic, ±		ionic,
						1028	+901	>5	uncertain
	0.5 m/o Bi_2O_3	2200°F	2 hrs	2.92	4.53	709	erratic, neg.		ionic,
						860	+530		uncertain
						1028	+750	>5	
	1.0 m/o Bi_2O_3	2200°F	2 hrs	2.91	8.28	<770	erratic, neg.		mixed,
						770	-267		uncertain
						916	0		
						1028	+1333	>5	
	2.0 m/o Ba_2O_3	2200°F	2 hrs	2.92	7.07	<994	erratic, neg.		mixed,
						994	-372		uncertain
						1012	0		
						1080	+892	>5	
	5.0 m/o Bi_2O_3	(Unavailable)				<916	erratic, pos.		ionic,
						916	+224		uncertain
						1050	+1449	>5	

APPENDIX

TABLE AII (continued)

Summary of Ceramic and Electric Properties of Lithium Metatitanate and Its Analogues

Base Material	Addition	Sintering Conditions Temp.	Sintering Conditions Time	Bulk Density g/cm³	Porosity	Temperature	Seebeck Coefficient	Resistivity	Conduction
Li_2TiO_3	0.1 m/o ZrO_2	2400°F	3 hrs.	2.83	14.7	<700	erratic, neg.		ionic, uncertain
						920	0		
						1016	+844		
						1122	+1200		
						1135	+1215		
						1164	+1164		
						1220	+932	>5 ohm-cm	
	0.2 m/o ZrO_2	2400°F	3 hrs	2.85	12.8	<700	erratic, neg.		electronic, uncertain
						950	0		
						1140	-1246		
						1215	-412	>5	
	0.5 m/o ZrO_2	2400°F	3 hrs	2.87	12.7	<700	erratic, neg.		ionic, uncertain
						788	+1000		
						950	+438		
						1215	+885	>5	
	1.0 m/o ZrO_2	2400°F	3 hrs	2.90	10.1	<700	erratic, neg.		mixed, uncertain
						778	0		
						994	+1400		
						1122	0		
						1206	-700	>5	
	2.0 m/o ZrO_2	2400°F	3 hrs	2.94	6.4	<700	erratic, neg.		ionic, uncertain
						994	>+2700		
						1206	+1400	>5	
	5.0 m/o ZrO_2	2400°F	3 hrs	3.04	4.2	<700	erratic, neg.		mixed, uncertain
						906	>+2100		
						976	0		
						1004	-1910		
						1215	-1391	>5	
	0.1 m/o CeO_2	2400°F	3 hrs	2.86	14.0	<700	erratic, neg.		ionic, uncertain
						960	+1800		
						1164	+714	>5	

APPENDIX

TABLE AII (continued)

Summary of Ceramic and Electric Properties of Lithium Metatitanate and Its Analogues

Base Material	Addition	Sintering Conditions Temp.	Sintering Conditions Time	Bulk Density g/cm³	Porosity	Temperature	Seebeck Coefficient	Resistivity	Conduction
Li_2TiO_3	0.2 m/o CeO_2	2400°F	3 hrs	2.86	13.1	<700	erratic, neg.		unknown
						826	+3000		
						960	0		
						1012	-684		
						1088	0		
						1215	+1258	>5 ohm-cm	
	0.5 m/o CeO_2	2400°F	3 hrs	2.91	9.8	<700	erratic, neg.		ionic, uncertain
						960	+2000		
						1200	+1105	>5	
	1.0 m/o CeO_2	2400°F	3 hrs	2.90	10.9	<700	erratic, neg.		ionic, uncertain
						960	+2000		
						1200	+927	>5	
	2.0 m/o CeO_2	2400°F	3 hrs	2.93	10.8	<700	erratic, neg.		ionic, uncertain
						960	+1700		
						1215	+895	>5	
	5.0 m/o CeO_2	2400°F	3 hrs	3.03	10.4	<700	erratic, neg.		ionic
						750	-	628	
						898	-	63.2	
						960	+1800	-	
						978	-	19.6	
						1080	-	25.5	
						1090	+957	-	
						1170	-	23.4	
						1200	—	25.7	
						1215	+1400	-	
	4 m/o CeO_2	2400°F	2 hrs.	3.13	4.62	842	>|-1450|		electronic, uncertain
						986	>|-2040|		
						1080	>|-3125|		
						1206	-663	>5 ohm-cm	
	7 m/o CeO_2	2400°F	2 hrs	3.25	4.70	843	>+1410		ionic, uncertain
						1046	>+2080		
						1164	>+1205	>5	

APPENDIX

TABLE AII (continued)

Summary of Ceramic and Electric Properties of Lithium Metatitanate and Its Analogues

Base Material	Addition	Sintering Condition Temp.	Sintering Condition Time	Bulk Density g/cm³	Porosity	Temperature	Seebeck Coefficient	Resistivity	Conduction
Li_2TiO_3	10 m/o CeO_2	2400°F	2 hrs	3.38	4.23	<850	erratic, neg.		Mixed, uncertain
						950	+1180		
						1106	0		
						1182	-2250	>5 ohm-cm	
		2400°F	2 hrs	2.81	14.99	<784	erratic, neg		ionic, uncertain
						784	0		
						964	+2666		
						1220	+1160	>5	
	0.1 m/o ThO_2	2400°F	2 hrs	2.79	16.37	<802	erratic, neg.		ionic, uncertain
						802	0		
						876	+1424		
						1016	+127	>5	
	0.2 m/o ThO_2	2400°F	2 hrs.	2.79	17.13	<765	erratic, neg.		ionic, uncertain
						765	0		
						839	+1700		
						1016	+3000		
						1220	+1000	>5	
	0.5 m/o ThO_2	2400°F	2 hrs	2.87	13.53	<764	erratic, neg.		ionic or mixed, uncertain
						764	0		
						829	+1118		
						875	+464		
						1050	+87	>5	
	1.0 m/o ThO_2	2400°F	2 hrs	2.87	14.98	<820	erratic, neg.		ionic, uncertain
						820	0		
						937	+893		
						1220	+1643	>5	
	2.0 m/o ThO_2	2400°F	2 hrs	2.88	16.11	<790	erratic, neg.		electronic, uncertain
						793	-860		
						937	-1099		
						1220	-1200	>5	
	5.0 m/o ThO_2	2400°F	2 hrs	2.51	30.90	<820	erratic, neg.		mixed uncertain
						821	-1342		
						972	0		
						1016	+1310	>5	
						1220	+877		

APPENDIX

TABLE AII (continued)

Summary of Ceramic and Electric Properties of Lithium Metatitanate and Its Analogues

Base Material	Addition	Sintering Condition Temp.	Sintering Condition Time	Bulk Density g/cm³	Porosity	Temperature	Seebeck Coefficient	Resistivity	Conduction
Li_2TiO_3	0.1 m/o Nb_2O_5	2400°F	3 hrs	2.91	14.5	<700	erratic, neg.		ionic, uncertain
						964	+1900		
						1050	+705		
						1215	+113	>5 ohm-cm	
	0.2 m/o Nb_2O_5	2400°F	3 hrs	2.94	11.7	<700	erratic, neg.		ionic, uncertain
						970	+1700		
						1070	0		
						1215	+241	>5	
	0.5 m/o Nb_2O_5	2400°F	3 hrs	3.00	4.1	<700	erratic, neg.		ionic, uncertain
						950	+1600		
						1070	+1135		
						1215	+787	>5	
	1.0 m/o Nb_2O_5	2400°F	3 hrs	3.03	3.3	<700	erratic, neg.		ionic, uncertain
						852	+3000		
						950	+1500		
						1215	+577	>5	
	2.0 m/o Nb_2O_5	2400°F	3 hrs	3.09	2.9	<700	erratic, neg.		ionic, uncertain
						850	+4000		
						950	+1250		
						1215	+650	>5	
	5.0 m/o Nb_2O_5	2400°F	3 hrs	3.24	2.8	<700	erratic, neg.		ionic, uncertain
						950	+1500		
						1215	+370	>5	
	0.1 m/o Ta_2O_5	2400°F	3 hrs	2.98	8.9	<700	erratic, neg.		mixed, uncertain
						900-1000	+2300		
						1050	0		
						1200	+1000	>5	
	0.2 m/o Ta_2O_5	2400°F	3 hrs	2.95	7.3	<700	erratic, neg.		mixed, uncertain
						850	0		
						1000	-1000		
						1050	0		
						1200	+500	>5	

APPENDIX

TABLE AII (continued)

Summary of Ceramic and Electric Properties of Lithium Metatitanate and Its Analogues

Base Material	Addition	Sintering Conditions Temp.	Sintering Conditions Time	Bulk Density g/cm³	Porosity	Temperature	Seebeck Coefficient	Resistivity	Conduction
Li_2TiO_3	0.5 m/o Ta_2O_5	2400°F	3 hrs	3.06	3.7	<700	erratic, neg.		mixed, uncertain
						1050	+2300		
						1190	0		
						1200	+323	>5 ohm-cm	
	1.0 m/o Ta_2O_5	2400°F	3 hrs	3.12	3.2	924	>|-1700|		mixed, uncertain
						986	0		
						1030	+537		
						1056	0		
						1114	-415		
						1198	-73	>5	
	2.0 m/o Ta_2O_5	2400°F	3 hrs	3.17	4.6	942	erratic, neg.		mixed
						960	+1900		
						1050	0		
						1122	-473		
						1198	0		
						1224	+200	~0.7	
	5.0 m/o Ta_2O_5		Failed						
Li_2SnO_3		2300°F	2 hrs	4.36	13.2	<742	erratic, neg.		ionic,
						742	0		
						870	+600		
						1033	+884		
						1182	+700	>5	
$LiAlO_2$		2300°F	2 hrs	2.04	19.1	842	>|-1450|		electronic, uncertain
						986	>|-2040|		
						1080	>|-3125|		
						1206	-663	>5	

APPENDIX

TABLE AIII

Summary of Ceramic and Electrical Properties of Multiple Oxides

Base Material	Addition	Sintering Conditions Temp.	Sintering Conditions Time	Bulk Density g/cm³	Porosity	Temperature	Seebeck Coefficient	Resistivity	Conduction
$BaTiO_3$		2500°F	2 hrs	5.67	5.16%	1232°C	+439 uv/°C	>5 ohm-cm	unknown
						1106	+628		
						986	+962		
						888	+1098		
						770	+672		
						<770	erratic ±		
	0.1 m/o La_2O_3	2400°F	0 hrs	5.54	7.28	742	-638		electronic,
						915	-958		uncertain
						1236	-566	>5	
	0.2 m/o La_2O_3	2400°F	0 hrs	5.84	0.047	750	-929		electronic,
						980	-742		uncertain
						1219	-628	>5	
	0.5 m/o La_2O_3	2500°F	2 hrs	5.34	7.49	<960	erratic, neg		electronic
						960	-1328		uncertain
						1174	-1171		
						1256	-1203	> 5	
	1.0 m/o La_2O_3	2700°F	2 hrs	5.54	0.14	<915	erratic, neg		electronic
						915	-969		uncertain
						1030	-860		
						1174	-1087	>5	
	2.0 m/o La_2O_3) Failed								
	5.0 m/o La_2O_3)								
	0.1 m/o Nb_2O_5	2500°F	2 hrs	Unavailable		<906	erratic, neg		electronic
						906	-981		uncertain
						942	0		
						1100	-676	>5	
	0.2 m/o Nb_2O_5	Failed							
	0.5 m/o Nb_2O_5	2600°F	2 hrs	5.42	4.66	<745	erratic, neg		electronic
						745	-1754		uncertain
						946	-1951		
						1220	-2976	>5	

APPENDIX

TABLE AIII (continued)

Summary of Ceramic and Electrical Properties of Multiple Oxides

Base Material	Addition	Sintering Conditions Temp.	Sintering Conditions Time	Bulk Density	Porosity	Temperature	Seebeck Coefficient	Resistivity	Conduction
	1.0 m/o Nb_2O_5	2500°F	2 hrs	5.22	7.32	<788	erratic, neg		electronic uncertain
						788	-610		
						862	-1224		
						>862	very large, neg	>5	
	2.0 m/o Nb_2O_5	2500°F	2 hrs	5.50	0.0	<750	erratic, neg		electronic uncertain
						750	-764		
						824	-763		
						950	-328		
						>950	erratic, ±	>5	
	5.0 m/o Nb_2O_5	2700°F	2 hrs	5.17	8.06	<836	erratic, pos.		ionic uncertain
						836	+980		
						1046	0		
						1206	+221	>5	
$BaTiO_3$	0.1 m/o Sb_2O_5	2400°F	0 hrs	5.73	0.73	<780	erratic, neg		electronic uncertain
						780	-139		
						960	-425	>5	
	0.2 m/o Sb_2O_5	2400°F	0 hrs	5.69	1.05	<960	erratic, neg		electronic uncertain
						960	-778		
						1164	-767	>5	
	0.5 m/o Sb_2O_5	2500°F	2 hrs	5.52	0.65	<1050	erratic, neg		electronic uncertain
						1050	-757		
						1240	-651	>5	
	1.0 m/o Sb_2O_5	2500°F	2 hrs	5.66	0.00	<1050	erratic, neg		electronic uncertain
						1050	-827		
						1240	-807	>5	
	2.0 m/o Sb_2O_5	2500°F	2 hrs	5.23	0.00	750	-133		electronic uncertain
						870	-647		
						1002	-1090		
						1206	-800	>5	

APPENDIX

TABLE AIII (continued)

Summary of Ceramic and Electrical Properties of Multiple Oxides

Base Material	Addition	Sintering Conditions Temp.	Sintering Conditions Time	Bulk Density	Porosity	Temperature	Seebeck Coefficient	Resistivity	Conduction
	5.0 m/o Sb_2O_5	2500°F	2 hrs	5.62	0.00	<600	erratic, neg		electronic
						825	-770	>5	uncertain
						>825	very large neg.		
$BaTiO_3$	0.1 m/o CeO_2	2500°F	2 hrs	5.31 g/cm³	3.33	<714	erratic, neg		unknown
						950	+395		
						1140	0		
						1240	-519	>5	
	0.2 m/o CeO_2	2500°F	2 hrs	5.34	3.34	<679	erratic, neg		unknown
						852	+934		
						1198	0		
						1240	+107	>5	
	0.5 m/o CeO_2	2500°F	2 hrs	5.27	6.22	1012	erratic, neg		electronic
						1050	-767		uncertain
						1215	-861	>5	
	1.0 m/o CeO_2	2600°F	2 hrs	5.38	6.20	1012	erratic, neg		electronic
						1050	-780		uncertain
						1215	-738	>5	
	2.0 m/o CeO_2	2600°F	2 hrs	5.41	4.31	986	erratic, neg		electronic
						1038	-381		uncertain
						1215	-833	>5	
	5.0 m/o CeO_2	2600°F	2 hrs	5.36	6.67	1038	erratic, neg		electronic
						1172	-850		uncertain
						1215	-772	>5	
$LaCrO_3$		3000°F	2 hrs	6.46 g/cm³	0.0%	582°C	+634 μv/°C		ionic
						650	+629	4.32 ohm-cm	
						819	+288		
						906	+640	3.59	
						967	+650		
						1032	+695	3.26	

APPENDIX

TABLE AIII (continued)

Summary of Ceramic and Electrical Properties of Multiple Oxides

Base Material	Addition	Sintering Conditions Temp.	Sintering Conditions Time	Bulk Density	Porosity	Temperature	Seebeck Coefficient	Resistivity	Conduction
	0.1 m/o TiO_2	3000°F	2 hrs	6.31	0.7	592	+571		ionic
						708	+563		
						874	+541		
						963	558	3.65	
						1041		1.97	
						1100	516		
						1231	574		
	0.2 m/o TiO_2	Failed to sinter							
	0.5 m/o TiO_2	Failed to sinter							
	1.0 m/o TiO_2	Failed to sinter							
	2.0 m/o TiO_2	Failed to sinter							
	5.0 m/o TiO_2	3000°F	2 hrs	5.52	13.2	570	+532		ionic
						724	+522	2.74	
						881	+541	2.03	
						998	+554		
						1134	+565		
	0.1 m/o ZrO_2	3000°F	2 hrs	5.40	17.73	592	+560		ionic
						810	+547		
						928	+	2.38	
						945	+568		
						1050	+566		
						1109		2.22	
						1126	+591		
						1216		1.55	
	0.2 m/o ZrO_2	3000°F	2 hrs	5.87	8.48	596	+580		ionic, uncertain
						810	+553		
						945	+584		
						1041	+615		
						1159	+595	> 5 ohm-cm	

APPENDIX

TABLE AIII (continued)

Summary of Ceramic and Electrical Properties of Multiple Oxides

Base Material	Addition	Sintering Conditions Temp.	Sintering Conditions Time	Bulk Density	Porosity	Temperature	Seebeck Coefficient	Resistivity	Conduction
	0.5 m/o ZrO_2	3000°F	2 hrs	5.44	16.85	677	+547		ionic
						777	+533		
						959	+564		
						1030	+555		
						1123	+532		
						1166		2.05	
						1205		3.12	
						1213	+560		
	1.0 m/o ZrO_2	3000°F	2 hrs	5.94	6.96	594	+491		ionic
						814	+501		
						936	+509		
						1020	+516		
						1056		0.98	
						1112	+449		
						1171		1.08	
						1218	+454		
						1240		0.84	
	2.0 m/o ZrO_2	3000°F	2 hrs	6.34	10.17	684	+543		ionic
						798	+557		
						904	+585		
						1099	+628		
						1216		1.21	
	5.0 m/o ZrO_2	3000°F	2 hrs	6.20	1.88	670	+529		ionic
						762		1.38	
						768	+530		
						845		1.81	
						866	+532		
						964	+554		
						968		1.33	
						1072	+545		
						1172		1.15	
						1248		1.26	

APPENDIX

TABLE AIII (continued)

Summary of Ceramics and Electrical Properties of Multiple Oxides

Base Material	Addition	Sintering Conditions Temp.	Sintering Conditions Time	Bulk Density	Porosity	Temperature	Seebeck Coefficient	Resistivity	Conduction
	0.1 m/o SnO_2	Failed to sinter							
	0.2 m/o SnO_2	3000°F	2 hrs	644	0.22	574		3.61	ionic
						668	+587		
						687		2.77	
						760	+586		
						807		2.26	
						859	+602		
						963	+522		
						1072	+637		
						1182	+689		
	0.5 m/o SnO_2	3000°F	2 hrs	5.66	10.32	633	+138		ionic uncertain
						706	+671		
						799	+626		
						843	-277		
						894	>|-833|		
						943	+667		
						1100	+711		
						1213	+707	>5	
	1.0 m/o SnO_2	3000°F	2 hrs	4.46	33.2	770	+525		ionic
						861	+548		
						968	+584		
						1080	+606		
						1140		1.9	
						1182	+663		
	2.0 m/o SnO_2	3000°F	2 hrs	6.38	0.11	702	+631		ionic
						749		4.58	
						826	+658		
						841		4.07	
						942	+647	3.67	
						1036	+656		
						1053		3.40	
						1143		3.18	
						1168	+601		
						1235		2.93	

TABLE AIII (continued)

Summary of Ceramics and Electrical Properties of Multiple Oxides

Base Material	Addition	Sintering Conditions Temp.	Sintering Conditions Time	Bulk Density	Porosity	Temperature	Seebeck Coefficient	Resistivity	Conduction
	5.0 m/o SnO_2	3000°F	2 hrs	6.40	0.02	594	+568		ionic
						734	+555		
						850	+569		
						963	+574		
						982		2.09	
						1072	+585		
						1095		2.09	
						1185		1.91	
						1200	+577		
$LaCrO_3$		3000°F	2 hrs	6.47	0	602	+628		ionic
						689	+600		
						766	+630	3.52	
						938	+684	3.80	
						1013	+652	3.38	
						1166	---	3.97	
						1223	---	3.61	
	0.1 m/o CeO_2	Failed to sinter							
	0.2 m/o CeO_2	3000°F	2 hrs	6.56	0	592	+672		ionic
						792	+667		
						1019	+698		
						1034		4.52	
						1119	+713		
						1226	+705		
						1255		4.03	
	0.5 m/o CeO_2	3000°F	2 hrs	6.52	0.05	758	+629		ionic
						957	+661		
						985		5.35	
						1063		5.23	
						1089	+663		
						1154		4.65	
						1193	+679		
						1257		4.08	

APPENDIX

TABLE AIII(continued)

Summary of Ceramic and Electrical Properties of Multiple Oxides

Base Material	Addition	Sintering Conditions Temp.	Sintering Conditions Time	Bulk Density	Porosity	Temperature	Seebeck Coefficient	Resistivity	Conduction
	1.0 m/o CeO_2	3000°F	2 hrs	4.46	33.30	648		3.68	ionic
						690	+522		
						790		3.45	
						810	+512		
						909		2.89	
						936	+509		
						1030		2.08	
						1034	+529		
						1117		2.65	
						1151	+541		
						1210		2.24	
	2.0 m/o CeO_2	3000°F	2 hrs	6.47	0	1065		4.67	ionic
						1163		3.66	
						1230		3.98	
						1173	+288		
						1049	+723		
						958	+691		
						842	+675		
						730	+665		
						570	+708		
	5 m/o CeO_2	3000°F	2 hrs	5.96	6.62	664	+595		ionic
						700		5.76	
						762	+588		
						876	+580		
						910		2.47	
						975	+574		
						1048		3.45	
						1097	+545		
						1206	+590		
						1223		2.37	

APPENDIX

TABLE AIII(continued)

Summary of Ceramic and Electrical Properties of Multiple Oxides

Base Material	Addition	Sintering Conditions Temp.	Sintering Conditions Time	Bulk Density	Porosity	Temperature	Seebeck Coefficient	Resistivity	Conduction
$YCrO_3$		3000°F and 3100°F	2 hrs 2 hrs	3.82	32.7	< 1002	erratic, pos		ionic uncertain
						1002	+371		
						1028	+372		
						1219	+1070	>5	
	.1 m/o CeO_2	3000°F and 3100°F	2 hrs 2 hrs	4.34	22.8	806	+erratic, pos		ionic uncertain
						<806	+831		
						897	+1000		
						1080	+1551		
						1224	+976	>5	
	.2 m/o CeO_2	3000°F and 3100°F	2 hrs 2 hrs	4.03	28.9	< 994	erratic, ±		mixed, uncertain
						994	<|-2281|		
						1054	0		
						1130	<|+367|	>5	
	.5 m/o CeO_2	3000°F and 3100°F	2 hrs 2 hrs	4.36	22.6	816	erratic, pos		ionic uncertain
						888	+967		
						1032	+1428		
						1169	+1108	>5	
	1 m/o CeO_2	3000°F and 3100°F	2 hrs 2 hrs	3.98	29.9	< 1008	erratic, pos		mixed uncertain
						1008	>+2326		
						1206	>|-1613|	>5	
	2 m/o CeO_2	3000°F and 3100°F	2 hrs 2 hrs	3.41	40.1	<942	large, neg		mixed uncertain
						942	>|-1408|		
						1050	>|-1450|		
						1218	+915	>5	
	5 m/o CeO_2	3000°F and 3100°F	2 hrs 2 hrs	3.33	41.5	< 1008	erratic, neg		mixed uncertain
						1008	-1605		
						1218	+1171	>5	

APPENDIX

TABLE AIII (continued)

Summary of Ceramic and Electrical Properties of Multiple Oxides

Base Material	Addition	Sintering Conditions Temp.	Sintering Conditions Time	Bulk Density	Porosity	Temperature	Seebeck Coefficient	Resistivity	Conduction
	.1 m/o TiO_2	3000°F	2 hrs	4.90	10.2	1218	+1132	>5	ionic
						942	+906		uncertain
						824	+943		
						<824	erratic, pos		
	.2 m/o TiO_2	3000°F	2 hrs	4.75	14.0	1218	+970	>5	mixed
						994	0		uncertain
						<994	erratic ±		
	.5 m/o TiO_2	3000°F	2 hrs	5.05	8.0	1218	+1113	>5	mixed
						1072	-1900		uncertain
						<1072	very erratic, ±		
	1 m/o TiO_2	3000°F	2 hrs	5.09	5.9	1218	+1160	>5	ionic
						1164	+2272		uncertain
						<1164	erratic, pos		
	2 m/o TiO_2	3000°F	2 hrs	5.46	3.2	1218	+128	> 5	mixed
						1172	0		uncertain
						1130	-223		
						1012	-903		
						<1012	erratic, neg		
	5 m/o TiO_2	3000°F	2 hrs	4.41	21.3	1173	+867	>5	ionic
						986	+960		uncertain
						870	+830		
						<870	erratic, pos		
	.1 m/o ZrO_2	3100°F	2 hrs	4.66	17.37	1038	>+1220	>5	ionic,
						924	>+952		uncertain
						842	+788		
						<842	very large, pos.		
	.2 m/o ZrO_2	3100°F	2 hrs	4.63	17.8	986	+738	>5	ionic
						897	<+512		uncertain
						<897	erratic, ±		

TABLE AIII (continued)

Summary of Ceramic and Electrical Properties of Simple Oxides

Base Material	Addition	Sintering Conditions Temp.	Sintering Conditions Time	Bulk Density	Porosity	Temperature	Seebeck Coefficient	Resistivity	Conduction
	.5 m/o ZrO_2	3100°F	2 hrs	4.70	14.5	1198	+1125	>5	ionic
						1072	+2021		uncertain
						942	>+1429		
						824	> +1150		
						714	> +1052		
						<714	erratic, pos		
	2 m/o ZrO_2	3100°F	2 hrs	4.06	29.0	1164	+703	>5	ionic
						1096	+337		uncertain
						<1096	erratic±		
	5 m/o ZrO_2	3100°F	2 hrs	4.38	23.8	1218	>+787	>5	mixed
						1106	+1061		uncertain
						1012	0		
						942	-950		
						<942	erratic, neg		
$PbNb_2O_6$		2150°F	2 hrs	6.07	5.48	1218	-1020	>5	mixed
						1160	-1961		uncertain
						1096	0		
						1008	+2375		
						937	+978		
						830	>+1587		
						<830	very large, pos		
	0.1 m/o CdO	2200°F	2 hrs	6.11	4.73	680	-448		mixed
						726	0		uncertain
						736	+350		
						838	>|+1375|		
						998	+812		
						1066	0		
						1143	-519	>5	

APPENDIX

TABLE AIII (continued)

Summary of Ceramic and Electrical Properties of Multiple Oxides

Base Material	Addition	Sintering Conditions Temp.	Sintering Conditions Time	Bulk Density	Porosity	Temperature	Seebeck Coefficient	Resistivity	Conduction
	0.2^{m}/o CdO	2200°F	2 hrs	6.10	4.32	<726	erratic,* neg		mixed
						792	>|-1138|		uncertain
						902	0		
						910	+428		
						954	0		
						972	-194		
						1024	-568	>5	
	0.5^{m}/oCdO	2200°F	2 hrs	5.83	7.58	<754	erratic, neg		electronic
						754	-411		uncertain
						928	>|-2061|		
						1066	-2500		
						1168	-1060	>5	
	1.0^{m}/oCdO	2200°F	2 hrs	5.70	10.54	<755	erratic, neg		mixed
						755	>|-1121|		uncertain
						892	-1188		
						963	0		
						980	+216		
						1016	0		
						1040	-73		
						1154	-712	>5	
	2.0^{m}/oCdO	2200°F	2 hrs	5.33	17.41	<736	erratic, neg		electronic
						736	-771		
						797		21,200	
						801	>|-1560|		
						892	>|-1821|		
						897		6,359	
						1016	-1141		
						1088		399	
						1152	-1121		
						1198		64	

TABLE AIII(continued)

Summary of Ceramic and Electrical Properties of Multiple Oxides

Base Material	Addition	Sintering Conditions Temp.	Sintering Conditions Time	Bulk Density	Porosity	Temperature	Seebeck Coefficient	Resistivity	Conduction
	$5^m/o$CdO	2200°F	2 hrs	4.91	24.8	<726	erratic, neg		electronic uncertain
						726	>|-1072|		
						782	>|-1141|		
						864	>|-1236|		
						1006	-800		
						1118	-708	>5	
	$0.1^m/o Bi_2O_3$	2200°F	2 hrs	6.06	4.86	<724	erratic, neg		electronic uncertain
						724	-683		
						800	-415		
						910	-1720		
						1170	-994	>5	
	$0.2^m/o Bi_2O_3$	2200°F	2 hrs	6.09	4.93	<718	erratic, neg		electronic uncertain
						718	-498		
						792	>|-1138|		
						892	>|-1228|		
						1168	-813	>5	
	$0.2^m/o Bi_2O_3$	2200°F	2 hrs	6.09	4.93	<718	erratic, neg		electronic uncertain
						718	-498		
						792	>|-1138|		
						892	>|1228|		
						1168	-813	> 5	
	$0.5^m/o Bi_2O_3$	2200°F	2 hrs	5.74	6.54	<715	erratic, neg		electronic
						715	-685		
						732		69,500	
						770	-1143		
						800		23,000	
						856	>|-2178|		
						915		3,798	
						1015	-3285	766	
						1097		244	
						1142	-2098		
						1215		55	

APPENDIX

TABLE AIII (continued)

Summary of Ceramic and Electrical Properties of Multiple Oxides

Base Material	Addition	Sintering Conditions Temp.	Sintering Conditions Time	Bulk Density	Porosity	Temperature	Seebeck Coefficient	Resistivity	Conduction
	1.0 m/o Bi_2O_3	2200°F	2 hrs	5.63	9.34	<698	erratic, neg		electronic uncertain
						698	-1090		
						782	>|-1290|		
						836	>|-1397|		
						980	-771		
						1168	-780	>5	
	2.0 m/o Bi_2O_3	2200°F	2 hrs	5.83	7.59	<762	erratic, neg		electronic uncertain
						762	-1215		
						862	>|-1724|		
						936	-1233		
						1150	-522	>5	
	5 m/o Bi_2O_3	2200°F	2 hrs	5.44	15.23	<670	erratic, neg		electronic uncertain
						670	-1029		
						845	-745		
						928	-454		
						1118	-744	>5	
$PbNb_2O_6$		2150°F	2 hrs	6.06	5.26	1218	-921	>5	mixed uncertain
						1192	0		
						1110	+1000		
						1032	+1979		
						924	+1257		
						866	> +1333		
						<866	erratic, pos.		
	0.1 Sb_2O_5	2150°F	2 hrs	6.00	5.58	732		84,300	electronic
						793		23,600	
						<800	erratic, neg		
						800	>|-1751|		
						915		3.699	
						972	>|-2785|		
						1016		801	
						1100		2.55	
						1160	>|-1930|		
						1207		68	

APPENDIX

TABLE AIII (continued)

Summary of Ceramic and Electrical Properties of Multiple Oxides

Base Material	Addition	Sintering Conditions Temp.	Sintering Conditions Time	Bulk Density	Porosity	Temperature	Seebeck Coefficient	Resistivity	Conduction
	0.2 m/o Sb_2O_3	2150°F	2 hrs	5.91	5.90	<782	erratic, neg		mixed uncertain
						782	-910		
						874	0		
						936	> +1579		
						1058	0		
						1142	-641	>5	
	0.5 m/o Sb_2O_3	2150°F	2 hrs	5.98	5.20	<754	erratic, neg		electronic uncertain
						754	-279		
						812	-260		
						910	-1154		
						1143	-1272	>5	
	1.0 m/o Sb_2O_3	2150°F	2 hrs	5.58	7.19	<708	erratic, neg		unknown
						708	>| -1040 |		
						762	0		
						802	+668		
						846	0		
						863	-167		
						892	0		
						945	+599		
						1066	0		
						1100	-264	>5	
	2.0 m/o Sb_2O_3	Unavailable				<782	erratic, neg		electronic uncertain
						782	>|-1176|		
						874	>|-1277|		
						998	-505		
						1151	<|-874|	>5	

APPENDIX

TABLE AIII(continued)

Summary of Ceramic and Electrical Properties of Multiple Oxides

Base Material	Addition	Sintering Conditions Temp.	Sintering Conditions Time	Bulk Density	Porosity	Temperature	Seebeck Coefficient	Resistivity	Conduction
	$5.0^{m}/o Sb_2O_5$	2150°F	2 hrs	6.04	4.44	<891	erratic, neg		electronic uncertain
						891	-909		
						954	-1056		
						1006	-788		
						1151	-791	>5	
$PbNb_2O_6$		2200°F	2 hrs	6.00	5.69	1214	-980	>5	mixed uncertain
						1156	0		
						1054	+1885		
						<1054	erratic, pos		
	$0.1^{m}/o MoO_3$	2150°F	2 hrs	5.96	5.82	782	>|-1494|		mixed uncertain
						874	>|-1666|		
						901	0		
						1032	+69		
						1041	0		
						1151	-661	>5	
	$0.2^{m}/o MoO_3$	2150°F	2 hrs	5.86	5.72	880	>|-1834|		electronic uncertain
						1006	-1896		
						1185	-836	>5	
	$0.5^{m}/o MoO_3$	2150°F	2 hrs	5.97	5.82	782	>|-1474|		electronic uncertain
						874	>|-1721|		
						998	-1585		
						1168	-796	>5	
	$1.0^{m}/o MoO_3$	2150°F	2 hrs	5.22	5.08	820	<|+1111|		mixed uncertain
						864	<|+1165|		
						936	0		
						962	-486		
						1092	-895	>5	
	$2.0^{m}/o MoO_3$	2150°F	2 hrs	6.07	5.78	<968	erratic, neg		electronic uncertain
						968	-1468		
						981	-1808	>5	

TABLE AIII (continued)

Summary of Ceramic and Electrical Properties of Multiple Oxides

Base Material	Addition	Sintering Conditions Temp.	Sintering Conditions Time	Bulk Density	Porosity	Temperature	Seebeck Coefficient	Resistivity	Conduction
	5.0 m/o MoO_3	2150°F	2 hrs	5.95	6.27	968	-1377		electronic
						1088	-1400		uncertain
						1190	-939	> 5	
$PbNb_2O_6$		2200°F	2 hrs	6.13	4.98	1218	-852	> 5	ionic
						1122	-900		uncertain
						1002	-1215		
						< 1002	erratic, neg		
	0.1 m/o WO_3	2200°F	2 hrs	6.02	6.92	<906	erratic, neg		electronic
						906	-304		uncertain
						968	-624		
						1061	<|-835|		
						1206	-925	> 5	
	0.2 m/o WO_3	2200°F	2 hrs	5.91	6.79	< 896	erratic, neg		electronic
						896	-56		uncertain
						960	-539		
						1148	-925	>5	
	0.5 m/o WO_3	2200°F	2 hrs	6.03	3.66	<694	erratic, neg		electronic
						942	-855		uncertain
						1088	-1100	>5	
	1.0 m/o WO_3	2200°F	2 hrs	5.94	5.00	<902	erratic, neg		electronic
						902	-704		uncertain
						1028	<|-652|		
						1140	<|-865|	>5	
	2.0 m/o WO_3	2200°F	2 hrs	5.95	5.71	Failed in test			
	5.0 m/o WO_3	2200°F	2 hrs	6.01	4.20	<906	erratic, neg		mixed
						906	0		uncertain
						1028	>+1050		
						1122	>+1085	>5	

APPENDIX

TABLE AIII (continued)

Summary of Ceramic and Electrical Properties of Multiple Oxides

Base Material	Addition	Sintering Conditions Temp.	Sintering Conditions Time	Bulk Density	Porosity	Temperature	Seebeck Coefficient	Resistivity	Conduction
$Pb_2Nb_2O_7$		2300°F	0 hrs	5.65	20.9	<800	erratic, neg		mixed
						800	+1256		uncertain
						844	+2912		
						936	0		
						988	-1600		
						1184	<|-1343|	>5	
	0.1^m/oCdO	2300°F	0 hrs	5.61	22.8	<773	erratic, neg		mixed
						773	+632		uncertain
						826	+1077		
						910	0		
						1015	-833		
						1159	-738	>5	
	0.2^m/oCdO	2300°F	0 hrs	5.70	20.2	<764	erratic, neg		electronic
						764	>|-1242|		uncertain
						821	>|-2645|		
						989	-641		
						1143	-692	>5	
	0.5^m/oCdO	2300°F	0 hrs	5.80	19.8	<736	erratic, neg		electronic
						736	-931		uncertain
						764	>|-1092|		
						838	>|-1176|		
						1144	-665	>5	
	1.0^m/oCdO	2300°F	0 hrs	5.84	20.2	<726	erratic, neg		electronic
						726	-458		uncertain
						764	-221		
						802	0		
						883	-660		
						1143	-717	>5	

APPENDIX

TABLE AIII (continued)

Summary of Ceramic and Electrical Properties of Multiple Oxides

Material	Addition	Temp.	Time	Density	Porosity	Temperature	Coefficient	Resistivity	Conduction
	2.0^m/oCdO	2300°F	0 hrs	6.05	19.7	<726	erratic, neg		electronic uncertain
						726	-1088		
						874	>|-1639|		
						954	-340		
						1151	-697	>5	
	5.0^m/oCdO	2200°F	2 hrs	5.22	32.04	<719	erratic, neg		electronic uncertain
						719	-572		
						810	>|-1114|		
						901	-1132		
						988	-778		
						1151	<|-747|	>5	
$Pb_2Nb_2O_7$		2200°F	2 hrs	5.18	40.89	<708	erratic, neg		mixed uncertain
						708	-395		
						746	-116		
						782	+240		
						856	0		
						901	-495		
						1126	-722	>5	
	0.1^m/oBi_2O_3	2200°F	2 hrs	5.53	37.0	<690	erratic, neg		electronic uncertain
						690	-804		
						726	-571		
						874	>|-1100|		
						1050	-703	>5	
	0.2^m/oBi_2O_3	2200°F	2 hrs	5.65	27.3	<746	erratic, neg		electronic uncertain
						746	-224		
						945	-373		
						1151	-685	>5	
	0.5^m/oBi_2O_3	2200°F	2 hrs	5.67	26.0	<724	erratic, neg		mixed uncertain
						724	-590		
						792	0		
						810	+790		
						838	0		
						918	-732		
						1134	<|-657|	>5	

TABLE AIII (continued)

Summary of Ceramic and Electrical Properties of Multiple Oxides

Base Material	Addition	Sintering Conditions Temp.	Sintering Conditions Time	Bulk Density	Porosity	Temperature	Seebeck Coefficient	Resistivity	Conduction
	$1.0^m/oBi_2O_3$	2200°F	2 hrs	5.77	25.1	<745	erratic, neg		electronic uncertain
						745	>|-1154|		
						812	>|-1256|		
						945	-648		
						1111	-670	>5	
	$2.0^m/oBi_2O_3$	2200°F	2 hrs	5.76	19.6	<726	erratic, neg		mixed uncertain
						726	-319		
						747	0		
						828	+987		
						892	0		
						980	-706		
						1151	-697	>5	
	$5.0^m/oBi_2O_3$	2200°F	2 hrs	6.78	6.21	612	-786		electronic uncertain
						698	>|-1200|		
						828	>|-1300|		
						1143	-786	>5	
	$0.1^m/oSb_2O_5$	2200°F	2 hrs	5.77	22.9	<755	erratic, ±		mixed uncertain
						755	-35		
						865	+1818		
						910	0		
						1032	-817		
						1142	-810	>5	
	$0.2^m/oSb_2O_5$	2200°F	2 hrs	6.03	14.6	<968	erratic, neg		electronic uncertain
						968	-477		
						1088	-591	>5	
	$0.5^m/oSb_2O_5$	2200°F	2 hrs	5.78	22.05	<764	erratic, neg		electronic uncertain
						764	>|-134|		
						857	>|-153|		
						971	-912		
						1126	-775	>5	

TABLE AIII(continued)

Summary of Ceramic and Electrical Properties of Multiple Oxides

Base Material	Addition	Sintering Conditions Temp.	Sintering Conditions Time	Bulk Density	Porosity	Temperature	Seebeck Coefficient	Resistivity	Conduction
	1.0 m/o Sb_2O_5	2200°F	2 hrs	5.66	25.5	<629	erratic, neg		mixed
						629	< |-1836|		uncertain
						708	< |-606|		
						724	0		
						854	> |+218|		
						918	0		
						1118	-705	>5	
	2.0 m/o Sb_2O_5	2200°F	2 hrs	5.91	20.0	<780	erratic, neg		electronic
						780	> |-1414|		uncertain
						864	> |-1642|		
						984	-651		
						1202	-609	>5	
	5.0 m/o SbO_5	2200°F	2 hrs	5.70	23.9	<612	erratic, neg		electronic
						612	-773		uncertain
						698	> |-137|		
						828	> |-120|		
						1143	-786	>5	
	0.1 m/o WO_3	2200°F	2 hrs	5.6	21.5	<792	erratic, neg		electronic
						792	-747		uncertain
						837	-385		
						901	-681		
						1032	-881		
						1162	-763	>5	
	0.2 m/o WO_3	2200°F	2 hrs	5.79	18.6	<782	erratic, neg		electronic
						782	-676		uncertain
						828	-463		
						904	-391		
						1015	-741		
						1151	-721	>5	

APPENDIX

TABLE AIII (continued)

Summary of Ceramic and Electrical Properties of Multiple Oxides

Base Material	Addition	Sintering Conditions Temp.	Sintering Conditions Time	Bulk Density	Porosity	Temperature	Seebeck Coefficient	Resistivity	Conduction
	0.5 m/o WO_3	2200°F	2 hrs	5.92	16.6	<810	erratic, neg		mixed uncertain
						810	-257		
						882	+207		
						892	0		
						980	-701		
						1168	-725	>5	
	1.0 m/o WO_3	2200°F	2 hrs	5.75	19.4	<810	erratic, neg		electronic uncertain
						810	-862		
						864	-812		
						971	-766		
						1168	-645	>5	
	2.0 m/o WO_3	2200°F	2 hrs	5.37	23.1	679	-709		mixed uncertain
						736	-266		
						845	+124		
						936	-722		
						1168	<|-482|	>5	
	5.0 m/o WO_3	2200°F	2 hrs	4.87	31.8	<670	erratic, neg		electronic uncertain
						670	-425		
						736	>|-794|		
						835	>|-860|		
						1106	-722		
						1169	<|-110|	>5	
$Pb_2Nb_2O_7$		2200°F	2 hrs	5.43	24.78	<717	erratic, neg		electronic uncertain
						717	-675		
						847	>|-982|		
						954	-548		
						1100	-662	>5	
	0.1 m/o MoO_3	2200°F	2 hrs	5.24	24.9	<801	erratic, neg		electronic uncertain
						801	>|-1754|		
						928	-654		
						1151	-697	> 5	

APPENDIX

TABLE AIII (continued)

Summary of Ceramic and Electrical Properties of Multiple Oxides

Base Material	Addition	Sintering Conditions Temp.	Sintering Conditions Time	Bulk Density	Porosity	Temperature	Seebeck Coefficient	Resistivity	Conduction
	0.2^{m}/oMoO_3	2200°F	2 hrs	5.87	20.2	<782	erratic, neg		mixed uncertain
						782	-233		
						805	0		
						838	+1109		
						878	0		
						945	-474		
						1134	-726	>5	
	0.5^{m}/oMoO_3	2200°F	2 hrs	6.77	27.3	<764	erratic, neg		electronic uncertain
						764	-191		
						856	-74		
						982	-788		
						1117	-655	>5	
	1.0^{m}/oMoO_3	2200°F	2 hrs	5.53	23.2	< 773	erratic, neg		electronic uncertain
						773	-323		
						874	-614		
						945	-619		
						1143	-690	>5	
	2.0^{m}/oMoO_3	2200°F	2 hrs	5.72	20.4	<764	erratic, neg		electronic uncertain
						764	-845		
						819	-598		
						892	-790		
						992	-564		
						1168	-610	>5	
	5.0^{m}/oMoO_3	Failed to sinter							