UNCLASSIFIED

AD 405 446

DEFENSE DOCUMENTATION CENTER

FOR

SCIENTIFIC AND TECHNICAL INFORMATION

CAMERON STATION, ALEXANDRIA, VIRGINIA

UNCLASSIFIED

NOTICE: When government or other drawings, specifications or other data are used for any purpose other than in connection with a definitely related government procurement operation, the U. S. Government thereby incurs no responsibility, nor any obligation whatsoever; and the fact that the Government may have formulated, furnished, or in any way supplied the said drawings, specifications, or other data is not to be regarded by implication or otherwise as in any manner licensing the holder or any other person or corporation, or conveying any rights or permission to manufacture, use or sell any patented invention that may in any way be related thereto.

405446

405 446

TRANSIENT RADIATION EFFECTS ON PASSIVE PARTS
REPORT NO. 3
CONTRACT DA 36-039 SC89112

THIRD QUARTERLY PROGRESS REPORT
1 DECEMBER 1962 TO 28 FEBRUARY 1963

Prepared by:

C. W. Perkins
Nucleonics Research Department
Nucleonics Division

Hughes Aircraft Company
Ground Systems Group
Fullerton, California

FR 63-17-102

NO OTS

TRANSIENT RADIATION EFFECTS ON PASSIVE PARTS
REPORT NO. 3
CONTRACT DA 36-039 SC-89112

THIRD QUARTERLY PROGRESS REPORT
1 DECEMBER 1962 TO 28 FEBRUARY 1963

An investigation of the problems of measurement of transient radiation effects in passive parts.

Prepared by:

C. W. Perkins
Nucleonics Research Department
Nucleonics Division

Hughes Aircraft Company
Ground Systems Group
Fullerton, California

APPROVED:

for T. D. Hanscome, Manager
Nucleonics Research Department

APPROVED:

E. J. Rhoad, Operations Manager
Nucleonics Division

TABLE OF CONTENTS

		Page
I.	PURPOSE	1
II.	ABSTRACT	2
III.	PUBLICATIONS, LECTURES, REPORTS AND CONFERENCES	3
IV.	FACTUAL DATA	4
	1. Coaxial Cable Tests	4
	2. Electrostatic Shielding Tests	9
	3. Capacitor D. C. Tests	9
	4. A. C. Tests	13
V.	CONCLUSIONS	16
VI.	PROGRAM FOR NEXT INTERVAL	17
VII.	IDENTIFICATION OF PERSONNEL	18
VIII.	ABSTRACT CARD	20
IX.	DISTRIBUTION LIST	23

I. PURPOSE

The concerned contract calls for an investigation of the problems of measurement of the response of passive electronic parts and devices to pulsed nuclear radiation with a view toward establishing optimum techniques for mass testing of said parts and devices.

A two phase effort is provided for by the contract. Phase A consists of an investigation of the problems involved in the measurement of radiation effects in passive parts and a refinement of experimental techniques. Phase B covers a pilot testing program of representative parts using the techniques established in Phase A.

The third quarter is devoted to a continuation of the experimental effort of Phase A of this program. The results of the tests of the proceding quarters are incorporated into a measuring technique which is to be tested. Further improvement is also sought in the a.c. carrier technique of measuring transient changes in capacitance.

II. ABSTRACT

This report covers the results of irradiation tests at the Sandia Pulsed Reactor Facility in Albuquerque, New Mexico, during the week of February 4, 1963. The tests were performed using an experimental technique for transient effects measurements, which should eliminate the interfering effects of coaxial cables. This system was used in the following areas of investigation:

1. Coaxial cable tests.
2. Electrostatic shielding.
3. d.c. capacitor tests.
4. a.c. capacitor tests.

The coaxial cable tests with the suggested technique reveal a "cross-over" voltage near zero for coaxial cables, which greatly simplifies transient effects measurements. These tests serve to prove the system out for a great number of transient radiation effects tests.

Variations in the type of electrostatic shielding were tried on a two watt carbon composition resistor, but these tests showed that electrostatic shielding may not be needed for many parts using the proposed experimental system, because the aluminum box used in this system for mounting the part already provides sufficient electrostatic shielding.

Additional confirmation of the proposed experimental technique was obtained in the d.c. capacitor tests through the yielding of consistent results. Dose damage to the paper capacitors used was revealed, and the leakage conductivities calculated agree with the results of other investigators.*

Amplitude demodulation techniques were tried in the a.c. carrier method of measuring capacitance change in order to increase sensitivity, but the tests failed to produce reproducible results. Dose damage to the capacitors indicates that new capacitors should be used in each burst. Methods are being investigated to improve laboratory calibration of the system.

---

* loc. cit.

III. PUBLICATIONS, LECTURES, REPORTS AND CONFERENCES

(None)

IV. FACTUAL DATA

On the basis of the results of the previous quarters, a technique is proposed which, it is hoped, will solve most of the problems involved in the measurement of transient radiation effects in passive parts. The parts are mounted in a small aluminum box with the "signal" cable mounted without connector so that attachment of the part can be made directly to the center conductor. The outer conductor or shield is isolated from the box to provide for biasing the shield. The system is diagrammed in Figure 1. The second cable is provided for applying voltages to the lower end of the part, and any type of cable or shielded wire can be used for this purpose since the signal does not appear at this point, i.e. it is at a.c. ground.

The purpose of the box is to standardize or fix the physical environment of the part for the effects of secondary emission and external leakage. Thus the part does not see secondary particle radiations scattered from nearby materials since these are absorbed by the box, but sees only those scattered from the box itself, and this remains constant in the tests. External leakage is also standardized because the conductor and ground geometry is fixed throughout the tests by the presence of the box.

This technique was investigated in the various tests performed at SPRF and described below. For this purpose a large number of identical boxes were constructed and mounted around the reactor.

1. Coaxial Cable Tests

A number of tests were performed without parts mounted in the boxes in order to determine the behavior of the coaxial cable alone in this configuration. For these tests the cable shield was grounded, and various cables were exposed with different applied voltages. This was done primarily to determine the "cross-over point" voltage for this test configuration.

These voltage dependence measurements were made under three different conditions: (1) the cables were cut flush; (2) the cables were cut with one-half inch of center conductor exposed; and (3) the cables were cut flush and a two-watt carbon composition resistor was placed inside the box to determine if secondary emission

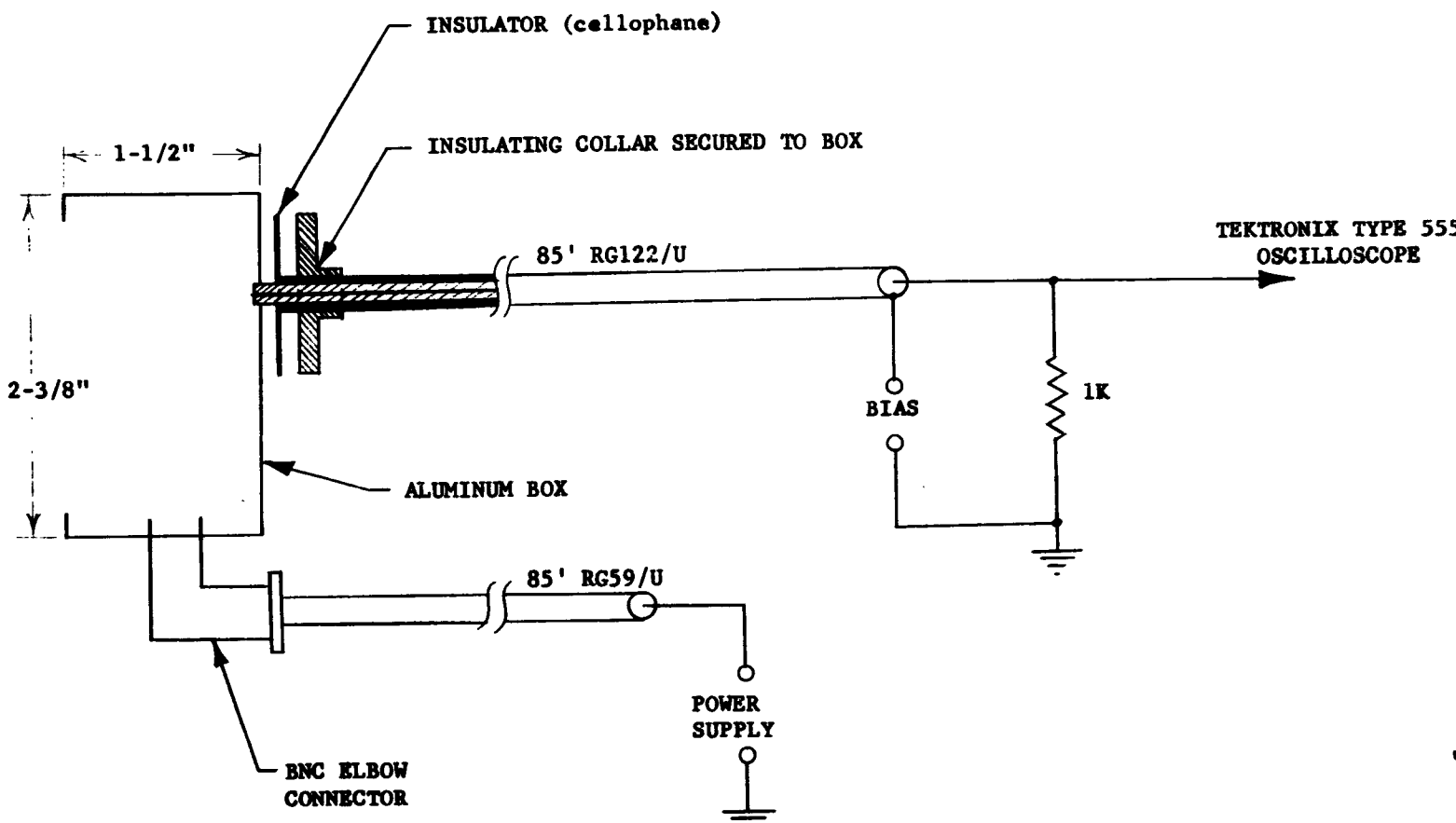

FIGURE 1: TRANSIENT EFFECTS MEASUREMENT SYSTEM

effects from the resistor were significant. This resistor was not connected to the cable. The setups for these measurements are shown in Figure 2.

The results of these tests are shown in Table I. The striking result is that "cross-over"* appears to occur very nearly at zero volts for all three test conditions. The pulses for the flush cables were consistently much smaller than those with center conductor exposed. In some cases, unusually large pulses are seen to occur in the first burst, but in subsequent bursts the responses settled down to reasonably consistent values. Prior irradiation of the cable thus appears to be desirable for radiation effects measurements. However, the results of these tests indicate that if the cable is zero-biased such preconditioning is not required.

The presence of the two watt dummy resistor in the box apparently has no effect on this cable response. The response at zero volts is still less than one microampere, so that for most experiments where the pulses are considerably greater than one microampere, the effect of the cable can still be eliminated by zero-biasing.

The results of the tests with center conductor exposed are plotted in Figure 3. The effective external leakage resistance for positive voltages is of the order of one megohm as compared to effective leakage resistances for the flush cable of about 20 megohms. The saturation effect at negative voltages is presumably the same effect observed in cylindrical geometry ionization chambers, the negative voltage on the exposed lead repelling electrons from the most effective region around the lead. It is not certain whether the apparent buildup with successive bursts here is real or simply a fortuitous ordering of the statistical fluctuations.

A surprising result of these tests is that at zero volts even the cables with exposed center conductor show a secondary emission signal an order of magnitude smaller than previously obtained without the box. (See Second Quarterly Report). This may be due to the scattering of electrons from the box and onto the conductor, cancelling secondary emission from the conductor.

---

* Second Quarterly Report

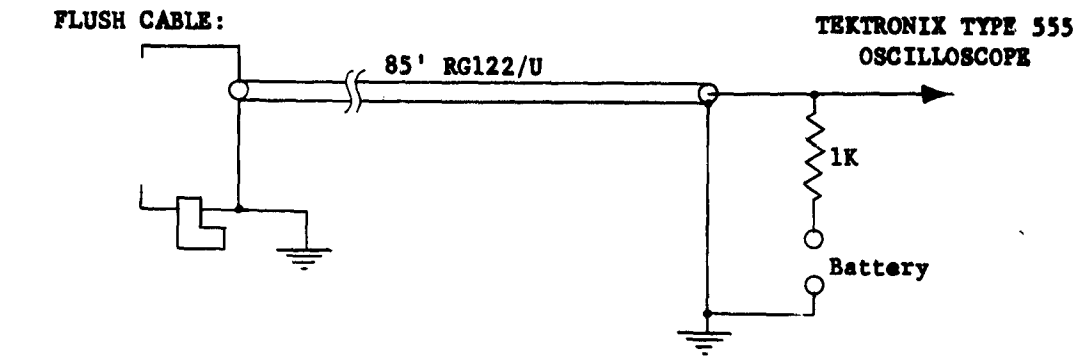

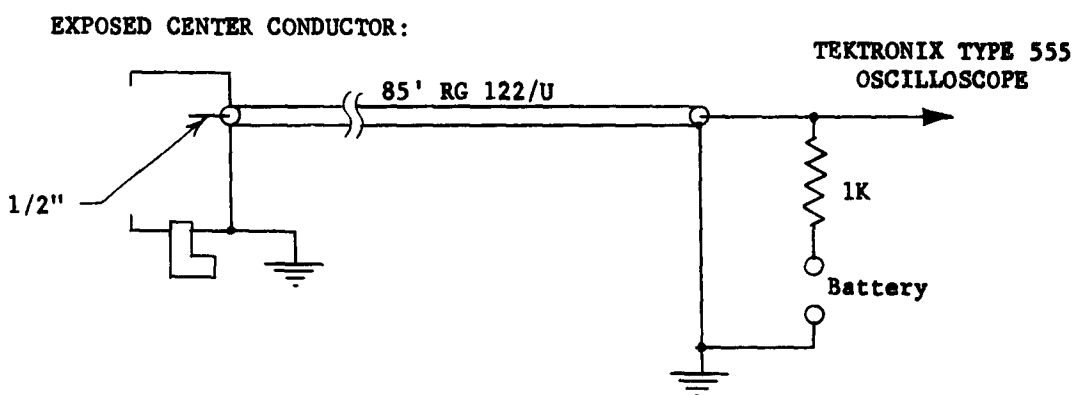

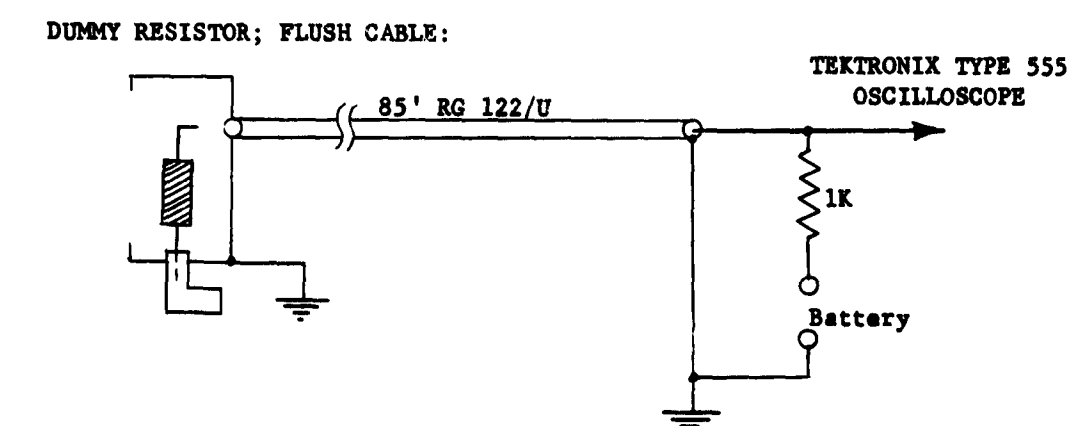

FIGURE 2: EXPERIMENTAL SETUP FOR COAXIAL CABLE TEST

TABLE I

TRANSIENT EFFECTS IN EXPOSED END OF RG 122/U COAXIAL CABLE

(Pulse Heights Normalized to Burst of 10^{16} Fissions)

	Applied Voltage	-94	-42	0	10	45	94
Flush Cable	Burst 1	-15.6μa	-2.6 μa	-0.13 μa	8.35 μa	5.2 μa	2.6 μa
	" 2	- 5.4	-1.6	-0.14	4.35	3.8	2.2
	" 3	- 5.0	-1.7	~0	0.55	3.8	1.9
	" 4	- 4.4	-1.9	~0	0.80	4.0	2.9
	" 5	- 4.5	-1.8	~0	.....	4.5	3.5
Exposed Center Conductor	Burst 1	-39	....	~0	10.4	....	86
	" 2	-32.4	-21.7	1.1	14.1	43.5	98
	" 3	-33	-21	1.1	14.8	....	104
	" 4	-34.8	....	0.8	15.5	....	107
	" 5	-40	-25	0.25	16	50	112
Flush Cable with Dummy Resistor	Burst 1	-15.6	....	~0	1.0	....	-3.6
	" 2	- 8.2	....	0.27	0.8	....	1.6
	" 3	- 4.4	....	0.14	0.8	....	2.5
	" 4	- 4.4	....	-0.14	0.8	....	2.14
	" 5	- 4.3	....	1.25	1.0	....	2.26

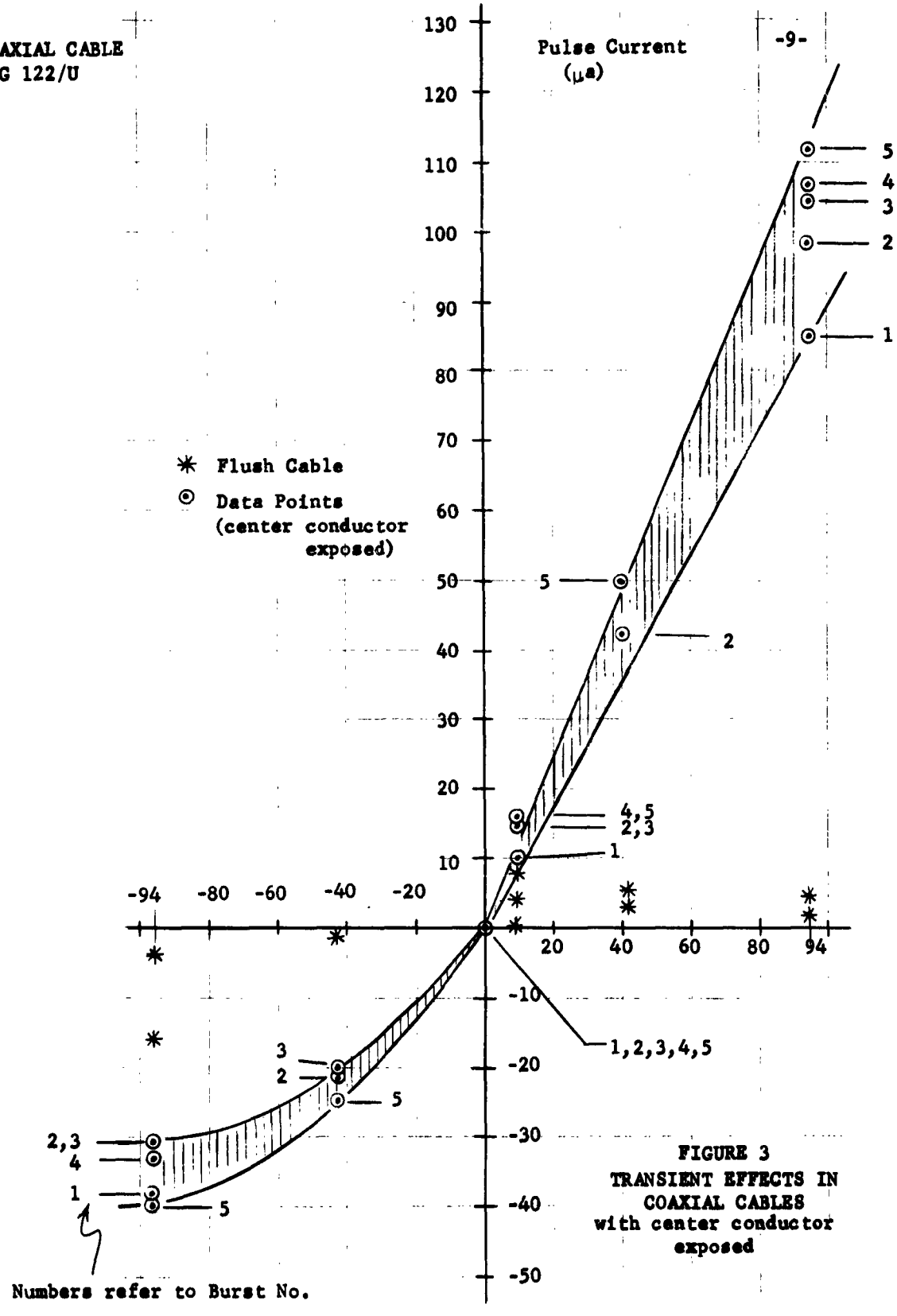

FIGURE 3
TRANSIENT EFFECTS IN
COAXIAL CABLES
with center conductor
exposed

2. Electrostatic Shielding Tests

The previously tested electrostatic shielding techniques for removing air ionization leakage were again tested in the aluminum box setup of Figure 1 with carbon composition resistors. Four shielding configurations were examined, each at 0 volts and + 90 volts on the high voltage side of the resistor. The configurations were: (1) resistor unshielded, (2) high voltage lead shielded, (3) body and high voltage lead shielded, and (4) same as (3) except that resistance paint is included as described in the Second Quarterly Report. The shield in all cases was at ground potential.

The results of these tests are listed in Table II. Except for a few large responses in Burst 6, the data shows no definite differences in the effects of the different types of shielding. The fact that the unshielded case shows no external leakage effect is because the box itself effectively shields the signal lead from the high voltage end of the resistor. Most of the electric field lines from the high voltage end terminate at the grounded box rather than at the exposed lead of the signal cable.

A point to be observed in these results is that the responses are in general no larger than occur with the cable alone. Thus the secondary emission effect for two watt resistors is small compared to these cable responses, i.e. it is of the order of one microampere or less.

3. Capacitor D.C. Tests

The internal transient radiation effects under d.c. conditions for paper 0.01 microfarad capacitors were also investigated in the proposed experimental system used throughout these tests. External leakage is negligible because of the shielding effect of the aluminum box as observed above. The signal cable is at zero volts and the voltage is applied at the lower side of the capacitor. The results of these measurements are plotted in Figure 4.

At positive voltages the points for a given burst lie very close to a straight line, a fact which speaks well for the experimental system. At succeeding bursts,

TABLE II

TRANSIENT EFFECTS IN ELECTROSTATICALLY SHIELDED RESISTORS

	UNSHIELDED		H. V. LEAD SHIELDED		BODY AND LEAD SHIELDED		RESISTANCE PAINT SHIELD	
Burst No.	0 Volts	+ 90 Volts	0 Volts	+90 Volts	0 Volts	+ 90 Volts	0 Volts	+ 90 Volts
6	-10.3 μa	-8.1 μa	-0.76 μa	-7.6 μa	~0 μa	~0 μa	-0.75 μa	....
7	- 2.2	-1.4	-2.5	-2.8	....	~0	....	-2.2
8	- 1.1	-0.6	-1.6	-2.2	~0	~0	-1.4	-1.7
9	- 0.84	+0.22	-1.95	-1.67	-1.7	~0	-0.84	-1.4
10	.....	+1.4	....	+1.09	....	+2.18	....	+2.18
10	.....	~0	....	-0.60	....	-1.36	....	-1.36
11	.....	+1.4	....	+1.13	....	+1.7	....	+1.7
11	.....	-0.14	....	~0	....	-0.11	....	-0.57
12	.....	~0	....	~0	....	+1.48	....	....
12	.....	+0.27	....	-0.54	....	-1.08	....	-0.54
13	-0.27	.....	-0.33	....	-0.50	....	-0.55	....
13	-0.22	.....	-0.55	....	-1.1	....	~0	....
14	-0.15	.....	-0.59	....	-0.57	....	-0.52	....
14	-0.65	.....	-1.18	....	-0.59	....	~0	....

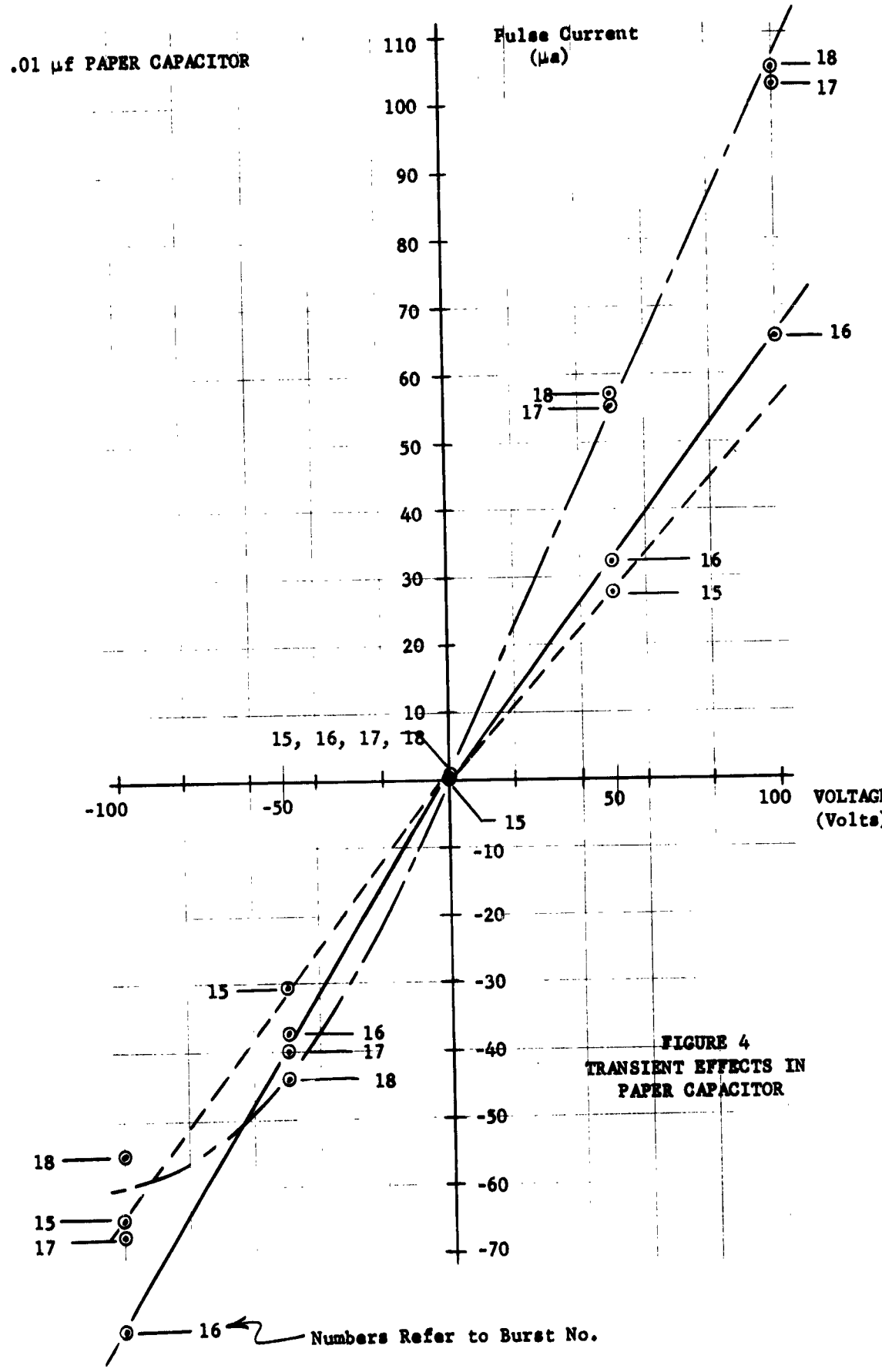

FIGURE 4
TRANSIENT EFFECTS IN
PAPER CAPACITOR

the slope of the line increases indicating greater internal leakage conductivity due to dose damage. Using a value of 7 for the dielectric constant the leakage conductivities are calculated from

$$\sigma = \epsilon \frac{G}{C}$$

to be

Burst	σ(mhos/cm)
15	3.5×10^{-11}
16	4.1×10^{-11}
17, 18	6.4×10^{-11}

These values agree, at least qualitatively, with the values obtained by other investigators* for various materials.

The saturation effects at negative voltages again may be related to a similar phenomenon in cylindrical ionization chambers.

4. A. C. Tests:

The a.c. carrier technique was again modified for these tests. The modified system is shown in Figure 5. Typical amplitude demodulation methods are employed, using a diode detector and low frequency amplifier. This enables increasing sensitivity of the system, which is desirable since amplitude changes of the order of one hundredth of one percent must be measured in order to detect capacitance changes less than one percent.

The system was calibrated prior to irradiation by artificially switching in resistance and capacitance increments and measuring the frequency response.

0.01 microfarad paper capacitors were used in these measurements, and they were mounted in the same small aluminum boxes used in the other tests described in this report.

These tests failed to show reproducibility and, therefore, lead to no useful results. Apparent dose damage to the capacitors was observed as in the d.c. tests. Changing the capacitor produced a different behavior from that of a capacitor which had been repeatedly irradiated. Both inconsistencies

---

* E. C. Conrad, Diamond Ordnance Fuze Laboratory, Report No. TR-1037, 4 May 1962.
S. M. Marcus, Boeing Airplane Co., Report No. D2-6594, February, 196

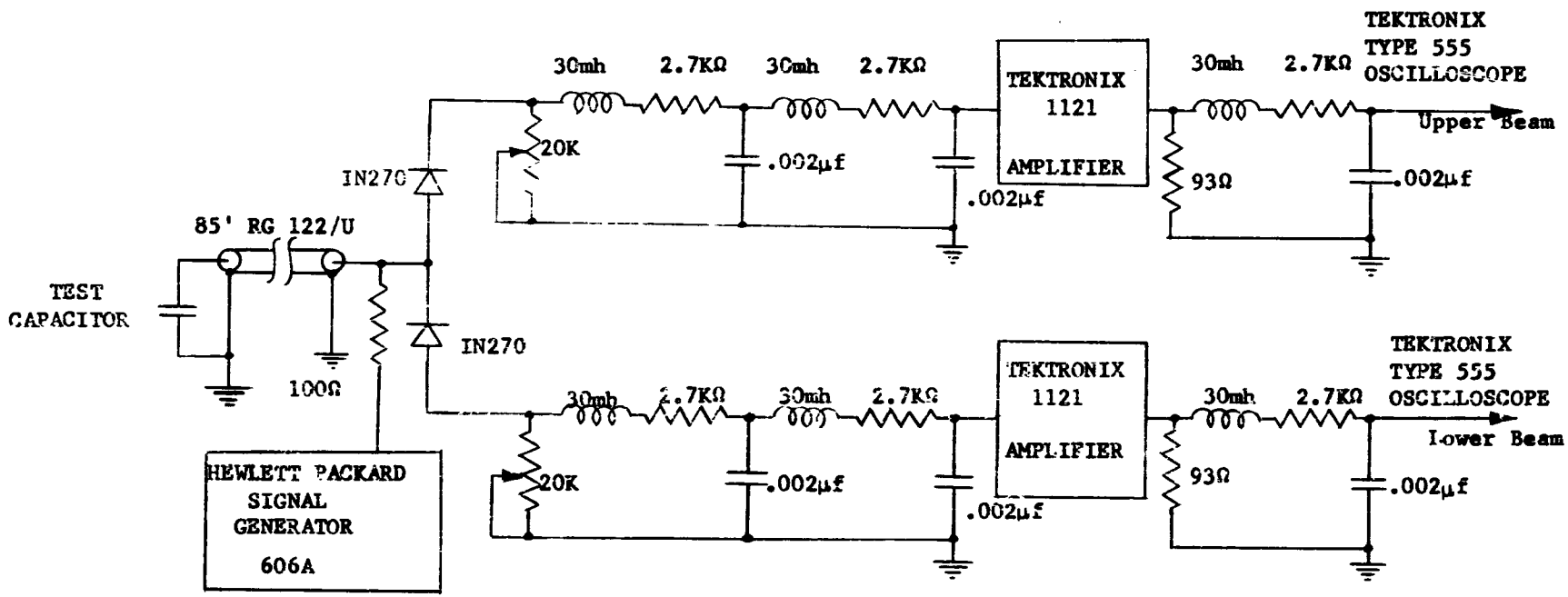

FIGURE 5: A. C. CARRIER TECHNIQUE DIAGRAM

and changes were also observed in the calibration when checked during the tests. This phenomenon is being investigated and attempts will be made to eliminate these changes and inconsistencies. Both experimental procedures and instrumentation will be investigated.

V. CONCLUSIONS

The proposed technique for making transient radiation effects measurements in passive parts is confirmed, at least for measurements close to the reactor at SPRF. Zero biasing the "signal" cable keeps the cable responses at values below one microampere.

The aluminum box used in this system also provides a degree of electrostatic shielding, thus eliminating the effects of external leakage through air ionization.

The system yields consistent reproducible results in the measurement of internal leakage effects in capacitors. A leakage conductivity of $\sigma = 3.5 \times 10^{-11}$ mhos/cm was determined for paper capacitors in first burst irradiations of about 10^{12} nvt (neutrons > 2.5 Mev) and 3×10^{7} r/sec gammas.

Greater sensitivity is obtained in the a.c. carrier technique of measuring capacitance change by employing amplitude demodulation methods, but virgin capacitors should be used in all measurements and better methods of system calibration are required.

VI. PROGRAM FOR NEXT INTERVAL

Preparations will be made for a pilot testing program using the technique studied in the tests described in this report. These tests will take place at SPRF during the week of April 29, 1963. Pilot tests will be run on various types of resistors and capacitors. Other parts may be included if the schedule permits.

The measurement technique itself will be subjected to further tests. These will include tests at farther distances from the reactor to determine if the effective "cross-over" voltage remains at zero. It will also be of interest to check the system with both conductors of the signal cable at some voltage much greater than zero.

The a.c. carrier technique will again be tested. Some improvements will be sought in the technique. Attempts will be made to eliminate calibration changes and inconsistencies.

VII. IDENTIFICATION OF PERSONNEL

The following key technical personnel have worked on this contract during the period covered by this report.

C. Wesley Perkins	Senior Staff Scientist Nucleonics Research Department Nucleonics Division	346 hours
Gary Thomas	Member of Technical Staff Nucleonics Research Department Nucleonics Division	284 hours
Royce D. Loveland	Member of Technical Staff Nucleonics Research Department Nucleonics Division	189 hours
Ross L. Birdsall	Member of Technical Staff Nucleonics Research Department Nucleonics Division	20 hours
		839 hours

R. L. BIRDSALL

Member of Technical Staff
Nucleonics Research Department
Nucleonics Division

Education: B. A., Physics, University of Utah
Graduate work, Physics, University of New Mexico

Mr. Birdsall is presently engaged in the research and development of dosimetric devices and techniques such as calorimeters, glass and film dosimeters, scintillation detectors, fission foils, and ion chambers used in the dose measurement of particle accelerators, pulsed reactors, and nuclide gamma and neutron sources.

Experience: Prior to association with Hughes Aircraft Company, Mr. Birdsall was a member of the Technical Staff at Sandia Corporation for 10 years. During this time, he supervised other professional personnel in the quality surveillance of radioactive materials. He was also responsible for the radiation safety and monitoring of personnel in his area. He had 5 years experience in the field of radiation standards, developing techniques for the calibration of radioactive sources and radiation measurement device. He has had extensive experience in the use of particle accelerators, nuclide gamma and neutron sources, and nuclear spectrometers.

VIII. ABSTRACT CARD

AD

Hughes Aircraft Company, Ground Systems Group
Nucleonics Division
Fullerton, California

Transient Radiation Effects in Passive Parts

by: C. W. Perkins, Third Quarterly Progress Report, 1 December 1962 to 28 February 1963
USAELRDL Contract No. DA36-039-SC89112
Unclassified Report

This contract covers a two phase research investigation leading to the development of measurement techniques of transient nuclear radiation effects in passive electronic parts, which technique will be suitable for mass-testing of large numbers of parts.

Progress in this quarter has led to a system of measurement which essentially eliminates the problem of interfering coaxial cable effects. The technique is used in measuring the radiation induced leakage conductivity of paper capacitors.

Progress is described in the development of a.c. carrier techniques for measuring capacitance change.

UNCLASSIFIED

1. Radiation, Ionization Effects
2. Electrical Equipment - Effects of Radiation

I. Title: Transient Radiation Effects in Passive Parts.
II. Perkins, C.W.
III. U. S. Army Electronic Research and Development Laboratory, Ft. Monmouth, New Jersey
IV. Contract DA36-039-SC89112

VIII. ABSTRACT CARD

AD

Hughes Aircraft Company, Ground Systems Group
Nucleonics Division
Fullerton, California

Transient Radiation Effects in Passive Parts

by: C. W. Perkins, Third Quarterly Progress Report, 1 December 1962 to 28 February 1963
USAELRDL Contract No. DA36-039-SC89112
Unclassified Report

This contract covers a two phase research investigation leading to the development of measurement techniques of transient nuclear radiation effects in passive electronic parts, which technique will be suitable for mass-testing of large numbers of parts.

Progress in this quarter has led to a system of measurement which essentially eliminates the problem of interfering coaxial cable effects. The technique is used in measuring the radiation induced leakage conductivity of paper capacitors.

Progress is described in the development of a.c. carrier techniques for measuring capacitance change.

UNCLASSIFIED

1. Radiation, Ionization Effects
2. Electrical Equipment - Effects of Radiation

I. Title: Transient Radiation Effects in Passive Parts.
II. Perkins, C.W.
III. U. S. Army Electronic Research and Development Laboratory, Ft. Monmouth, New Jersey
IV. Contract DA36-039-SC89112

VIII. ABSTRACT CARD

AD

Hughes Aircraft Company, Ground Systems Group
Nucleonics Division
Fullerton, California

Transient Radiation Effects in Passive Parts

by: C. W. Perkins, Third Quarterly Progress Report, 1 December 1962 to 28 February 1963
USAELRDL Contract No. DA36-039-SC89112
Unclassified Report

This contract covers a two phase research investigation leading to the development of measurement techniques of transient nuclear radiation effects in passive electronic parts, which technique will be suitable for mass-testing of large numbers of parts.

Progress in this quarter has led to a system of measurement which essentially eliminates the problem of interfering coaxial cable effects. The technique is used in measuring the radiation induced leakage conductivity of paper capacitors.

Progress is described in the development of a.c. carrier techniques for measuring capacitance change.

UNCLASSIFIED

1. Radiation, Ionization Effects
2. Electrical Equipment - Effects of Radiation

I. Title: Transient Radiation Effects in Passive Parts.
II. Perkins, C.W.
III. U. S. Army Electronic Research and Development Laboratory, Ft. Monmouth, New Jersey
IV. Contract DA36-039-SC89112

VIII. ABSTRACT CARD

AD

Hughes Aircraft Company, Ground Systems Group
Nucleonics Division
Fullerton, California

Transient Radiation Effects in Passive Parts

by: C. W. Perkins, Third Quarterly Progress Report, 1 December 1962 to 28 February 1963
USAELRDL Contract No. DA36-039-SC89112
Unclassified Report

This contract covers a two phase research investigation leading to the development of measurement techniques of transient nuclear radiation effects in passive electronic parts, which technique will be suitable for mass-testing of large numbers of parts.

Progress in this quarter has led to a system of measurement which essentially eliminates the problem of interfering coaxial cable effects. The technique is used in measuring the radiation induced leakage conductivity of paper capacitors.

Progress is described in the development of a.c. carrier techniques for measuring capacitance change.

UNCLASSIFIED

1. Radiation, Ionization Effects
2. Electrical Equipment - Effects of Radiation

I. Title: Transient Radiation Effects in Passive Parts.
II. Perkins, C.W.
III. U. S. Army Electronic Research and Development Laboratory, Ft. Monmouth, New Jersey
IV. Contract DA36-039-SC89112

IX. DISTRIBUTION LIST

	Copies
OASD (R and E) ATTN: Technical Library Room 3E1065 The Pentagon Washington 25, D. C.	1
Chief of Research and Development OCS, Department of the Army Washington 25, D. C.	1
Commanding General U. S. Army Materiel Command ATTN: R and D Directorate Washington 25, D. C.	1
Commanding General U. S. Army Electronics Command ATTN: AMSEL-AD Fort Monmouth, New Jersey	1
Director, U. S. Naval Research Laboratory ATTN: Code 2027 Washington 25, D. C.	1
Commander, Aeronautical Systems Division ATTN: ASAPRL Wright-Patterson Air Force Base, Ohio	1
Hq. Electronic Systems Division ATTN: ESAL L. G. Hanscom Field Bedford, Massachusetts	1
Commander, Air Force Cambridge Research Laboratories ATTN: CRO L. G. Hanscom Field Bedford, Massachusetts	1
Commander, Air Force Command and Control Development Div. ATTN: CRZC L. G. Hanscome Field Bedford, Massachusetts	1
Commander, Rome Air Development Center ATTN: RAALD Griffiss Air Force Base, New York	1

Commander, Armed Services Technical Information Agency
ATTN: TISIA
Arlington Hall Station
Arlington 12, Virginia 10

Chief, U. S. Army Security Agency
Arlington Hall Station
Arlington 12, Virginia 1

Commanding Officer
Harry Diamond Laboratories
ATTN: Library, Room 211, Building 92
Washington 25, D. C. 1

Corps of Engineers Liaison Office
U. S. Army Electronic Research and Development Laboratory
Fort Monmouth, New Jersey 1

AFSC Scientific/Technical Liaison Office
U. S. Naval Air Development Center
Johnsville, Pennsylvania 1

Commanding Officer
U. S. Army Electronics Materiel Support Agency
ATTN: SELMS-ADJ
Fort Monmouth, New Jersey 1

Marine Corps Liaison Office
U. S. Army Electronics Research and Development Laboratory
ATTN: SELRA/LNR
Fort Monmouth, New Jersey

Commanding Officer
U. S. Army Electronics Research and Development Laboratory
ATTN: Director of Research or Engineering
Fort Monmouth, New Jersey 1

Commanding Officer
U. S. Army Electronics Research and Development Laboratory
ATTN: Technical Documents Center
Fort Monmouth, New Jersey 1

Commanding Officer
U. S. Army Electronics Research and Development Laboratory
ATTN: SELRA/ADJ (FU No. 1)
Fort Monmouth, New Jersey 1

Advisory Group on Electron Devices
346 Broadway
New York 13, New York 1

Commanding Officer
U. S. Army Electronics Research and Development Laboratory
ATTN: SELRA/TNR
Fort Monmouth, New Jersey 3

(FOR RETRANSMITTAL TO ACCREDITED BRITISH AND CANADIAN GOVERNMENT REPRESENTATIVES)

Commanding General
U. S. Army Combat Developments Command
ATTN: CDCMR-E
Fort Belvoir, Virginia 1

Commanding Officer
U. S. Army Communications-Electronics Combat Development Agency
Fort Huachuca, Arizona 1

Director, Fort Monmouth Office
U. S. Army Communications-Electronics Combat Development Agency
Building 410
Fort Monmouth, New Jersey 1

AFSC Scientific/Technical Liaison Office
U. S. Army Electronics Research and Development Laboratory
Fort Monmouth, New Jersey 1

Commanding Officer and Director
U. S. Navy Electronics Laboratory
San Diego 52, California 1

Commanding Officer
U. S. Army Electronics Research and Development Laboratory
ATTN: SELRA/PEE (J. Newberg)
Fort Monmouth, New Jersey 22

CONTRACTORS

General Electric, Microwave Dept., 130 Saratoga Road,
Schenectady, New York, ATTN: Mr. A. Hodges 1

Georgia Institute of Technology and Engineering Experiment
Station 722 Cherry Street, N.W., Atlanta 13, Georgia,
ATTN: Dr. R. B. Belser 1

Hughes Aircraft Company, P. O. Box 3310, Fullerton,
California, ATTN: Mr. T. D. Hanscome 1

Hughes Aircraft Company, P. O. Box 3310, Fullerton, California, ATTN: Dr. C. W. Perkins 1

International Business Machine Corporation, Federal Systems Division, Route 17C, Owego, New York, ATTN: Mr. Bohan 1

Radiation Effects Information Center, Battelle Memorial Institute, 505 King Avenue, Columbus 1, Ohio, ATTN: Mr. E. N. Wyler 1

Northrop Corporation, Ventura Division, 8000 Woodley Avenue, Van Nuys, California, ATTN: Dr. D. A. Hicks 1

Space Technology Laboratories, P.O. Box 95001, Los Angeles 45, California, ATTN: Dr. B. Sushols, Mr. J. Maxcy; thru: DCAS, AF Unit Post Office, ATTN: TDC 61-1019-4, Los Angeles, Calif. 2

Sperry Microwave Electronics Company, San Christopher Drive, (H. P. Hood and Sons, Inc.) Plant, Dunedin, Florida, ATTN: Dr. Gordon Harris. 1

Stevens Institute of Technology, 501 and 711 Hudson Street, Hoboken, New Jersey, ATTN: Dr. E. Hanley 1

The Boeing Company, Aerospace Division, Physics Technology Dept., 7755 E. Marginal Way, Seattle 8, Washington, ATTN: Dr. Glenn Keister 1

D. M. Newell, Dept. 52-10-204, Lockheed Missiles and Space Co., 3251 Hanover Street, Palo Alto, California 1

Mr. B. Sussholz, Space Technology Laboratories, Inc., One Space Park, Redondo Beach, California 1

President, Sandia Corporation, Sandia Base, Albuquerque, New Mexico, ATTN: Dr. J. W. Easley, 5300 1

President, Sandia Corporation, Sandia Base, Albuquerque, New Mexico, ATTN: A. W. Snyder, 5313 1

President, Sandia Corporation, Sandia Base, Albuquerque, New Mexico, ATTN: S. C. Rogers, 5312 1

Director, Advanced Research Projects Agency, Washington 25, D.C., ATTN: Lt. Col. Roy Weidler 1

Admiral Corporation, 3800 Cortland Street, Chicago 47, Illinois, ATTN: Mr. R. Whitner 1

Applied Physics Laboratory, Johns Hopkins University, 8621 Georgia Avenue, Silver Spring, Maryland, ATTN: Mr. Robert Frieberg; Via BuWeps Representative, APL/JHU Silver Spring, Maryland 1

North American Aviation Corporation, Atomics International Division, 21600 Van Owen Street, Canoga Park, California, ATTN: Dr. A. Saur 1

ARINC Research Corporation, 1700 K Street, N. W., Washington 6, D.C., ATTN: Mr. W. Schultz 1

General Atomic, A Division of General Dynamic Corporation, P. O. Box S, Old San Diego Station, San Diego, California, ATTN: Dr. V.A.J. Van Lint 1

Burroughs Corporation, Central Avenue and Route 202, Paoli, Pennsylvania 1

General Dynamics/Fort Worth, Convair Division, Grants Lane, Fort Worth 1, Texas, ATTN: Mr. E. L. Burkhard 1

General Electric Company, Receiving Tube Department, 1301 East 18th Street, Owensboro, Kentucky, ATTN: Mr. D. Mickey 1

Commanding Officer, Diamond Fuze Laboratories, Connecticut Avenue and Van Ness Street, N.W., ATTN: Chief, Nuclear Vulnerability Branch (230), Washington 25, D. C. 1

Commanding Officer, U. S. Army Signal Research and Development Laboratory, ATTN: SIGRA/SL-P, Fort Monmouth, New Jersey 1

Commanding Officer, Naval Ordnance Laboratory, ATTN: Dr. Bryant Corona, California 1

Commander, Naval Ordnance Laboratory, White Oak, ATTN: Mr. Grantham, Silver Spring, Maryland 1

Commander, U. S. Naval Material Laboratory, New York Naval Shipyard, Naval Base, Brooklyn 1, New York 1

Commanding Officer and Director, U. S. Naval Radiological Defense Laboratory, San Francisco 24, California 1

AFSWC (SWRPA) Kirtland AFB, New Mexico 1

AFSWC (SWRFL) Kirtland AFB New Mexico 1

Chief, Defense Atomic Support Agency, ATTN: DASARA-4, Washington 25, D. C. 1

President, Sandia Corporation, Sandia Base, Albuquerque, New Mexico, ATTN: Dr. C. D. Broyles, 5113 1