UNCLASSIFIED

AD NUMBER
AD387510
CLASSIFICATION CHANGES
TO: unclassified
FROM: confidential
LIMITATION CHANGES
TO: Approved for public release, distribution unlimited
FROM: Distribution: No foreign.
AUTHORITY
GDS was Group-4 per document markings; DAMA ltr., 13 May 1975

THIS PAGE IS UNCLASSIFIED

GENERAL DECLASSIFICATION SCHEDULE

IN ACCORDANCE WITH
DOD 5200.1-R & EXECUTIVE ORDER 11652

THIS DOCUMENT IS:

CLASSIFIED BY _____

Subject to General Declassification Schedule of Executive Order 11652-Automatically Downgraded at 2 Years Intervals- DECLASSIFIED ON DECEMBER 31, _____.

BY

Defense Documentation Center
Defense Supply Agency
Cameron Station
Alexandria, Virginia 22314

AD3 7510

RESEARCH ANALYSIS CORPORATION

Computerized QUICK GAME: A Theater-Level Combat Simulation (U)

(19)

Volume I Models

DDC
MAR 6 1968

DISTRIBUTION STATEMENT
In addition to security requirements which must be met, this document is subject to special export controls and each transmittal to foreign governments or foreign nationals may be made only with prior approval of Office of the Chief of Research and Development, Headquarters, Department of the Army, Washington, D.C. 20310

CON
PRO
RAC

The contents of RAC publications, including the conclusions, represent the views of RAC and should not be considered as having official Department of the Army approval, either expressed or implied.

This document contains information affecting the national defense of the United States within the meaning of the Espionage Laws, Title 18, U. S. C., Sections 793 and 794. The transmission or the revelation of its contents in any manner to an unauthorized person is prohibited by law.

CONFIDENTIAL

MILITARY GAMING DEPARTMENT
TECHNICAL PAPER RAC-TP-266, Vol I
Published November 1967

DISTRIBUTION STATEMENT
In addition to security requirements which must be met, this document is subject to special export controls and each transmittal to foreign governments or foreign nationals may be made only with prior approval of Office of the Chief of Research and Development, Headquarters, Department of the Army, Washington, D.C. 20310

Computerized QUICK GAME: A Theater-Level Combat Simulation (U)

Volume I Models

by
Edward P. Kerlin
Donald W. Mader
Dudley H. Edwards

"This document con[illegible]
Defense of the United S[illegible]
Espionage Laws, Titl[illegible]
[illegible] transmission or the [illegible]
manner to an unauthorized [illegible] law."

RESEARCH ANALYSIS CORPORATION
McLEAN, VIRGINIA

CONFIDENTIAL

FOREWORD

This study was requested by the Office, Assistant Secretary of Defense (Systems Analysis) in October 1965. The purpose of the study was to develop a theater-level combat simulation that would assist in the analysis of competing strategic-deployment systems.

The need for a combat model of this type was realized in the course of a broader study, begun in 1964, of the strategic-deployment objectives to be sought by US military planners for increasing the strategic mobility of combat forces. The model presented here was developed to determine the military value of changes in the rate of arrival of troops, supplies, and equipment during a particular contingency operation.

Since the preparation of the draft of this technical paper, other priority work undertaken by the members of the study has unavoidably delayed its final publication. To expedite the early release of a description of computerized quick gaming, draft copies were furnished to certain members of the Project Advisory Group in October 1966. The final version of the paper, although structurally different, contains essentially the same model logic as the draft copy.

The authors, recognizing the following limitations of the present simulation, stress this to be a Mark I version of computerized quick gaming. Lateral movement of combat units and supplies between sectors is restricted by the model's one-dimensional battlefield configuration. The simulation of reserve units, separate air-defense aircraft, and a more detailed service support assessment as well as the nonlinear recovery of lines-of-communication capability are areas deserving further investigation.

Lawrence J. Dondero
Head, Military Gaming Department

ACKNOWLEDGMENTS

The authors wish to thank Mr. Richard E. Zimmerman for the many suggestions and helpful criticisms he made in the interest of computerized quick gaming. His guidance was greatly appreciated and is reflected in the scope and quality of this report.

The time and effort of Mr. James Pomeroy, who was solely responsible for transforming the model logic to a workable computer simulation, is also acknowledged. Mr. Pomeroy will be an author of Vol II of "Computerized Quick Game," which will include the program description and test-play analysis.

In addition we wish to recognize the untiring secretarial support of Mrs. Josephine Cofer, the principal typist for this report and many other routine briefings.

CONTENTS

Foreword iii

Acknowledgments iv

Summary 1

Problem—Facts—Discussion

Abbreviations 6

Introduction 7

Background—General Description

1. Ground-Combat Model 11

Definition—Background—Description of the Model—Operation of the Model

2. Logistics Model 29

Introduction—General Discussion—Detailed Description of the Model

3. Tactical-Air Model 36

Introduction—General Discussion—Methodology—Detailed Assessments

4. Tactical-Decision Model 48

General—Tactical-Decision-Model Interaction with Other Quick-Game Models

Appendix

A. Model Flow Charts 53

References 61

Figures

1. Computerized-Quick-Game Flow Diagram 8
2. Schematic Representation of the Battlefield Showing Sectors and Segments 9
3. Division Casualty Rates as a Function of Force Ratio 17
4. Unit Combat Effectiveness as a Function of Personnel Casualties, Division Level 19
5. Schematic Representation of Sector Node System 30
6. Degradation of ICE as a Function of Days of Supply on Hand 35
7. Sample Blue Mission-Assignment Curves 39

Tables

1. Casualty Rates for Computerized Quick Gaming 17
2. Division Effectiveness as a Function of Accrued Casualties 19
3. Infantry Division Movement Rates, No Barriers 22
4. Infantry Division Movement Rates, with Barriers 23
5. Armored, Mechanized, or Motorized Division Movement Rates, No Barriers 24
6. Armored, Mechanized, or Motorized Division Movement Rates, with Barriers 25
7. Firepower Scores for US and Soviet Weapons 26
8. Unit ICE Values Used in CQG: Initial Play 26

SUMMARY

Problem

To design and prepare a theater-level combat simulation based on the RAC quick game[1] that can measure in quantitative terms the effectiveness of forces deployed and logistic support furnished to various theaters of operations under varying levels of troop availability.

Facts

This study was requested by the Office, Assistant Secretary of Defense (OASD) (Systems Analysis) in October 1965. The purpose of the study was to develop a theater-level combat simulation that, in combination with other logistics and costs studies, would assist in the analysis of competing strategic-deployment means. The OASD already had available a RAC-developed linear-programming model[2] for the design of strategic-deployment systems to meet worldwide operational contingencies. There was, however, no combat model available to determine the military value of changes in the rate of arrival of troops and supplies during the initial deployment and/or subsequent buildup. That is, no combat model available was both complete enough and operated with the speed necessary for a rapid determination of the results of changes in the overall situation. However, recent unpublished notes from the US Army Strategy and Tactics Analysis Group (STAG) indicate the existence of a quick game called EAGLE: Experimental Air, Ground, Logistics Evaluator.

A combat model to meet this need should have air and ground forces and their supporting logistical systems, the ability to allocate forces to various roles and missions, and a realistic interaction between each of the elements portrayed. The model should also be able to respond to a number of contingencies and alternatives within the time limits imposed by the operations of the linear-programming model or by the users' planning process.

Discussion

The military commitments of the US have been extended over the years, through various treaties and agreements, to a worldwide arena. To meet these commitments, the US must maintain the capability to deploy an effective fighting force to virtually any conflict area in the world. Two major problems

confront the present Army and DOD planners. First, what is the level of the fighting force that appears to be most effective in a given contingency? Second, given the deployment means available, what is the composition of the deployment system that will deliver a fighting force to a contingency area to obtain the maximum effectiveness of that force?

Although there appears to be general agreement on the military and deterrent value of rapid force deployment, determination of the appropriate force level is another matter. For each contingency area the questions of force size and deployment speed are problematical. Many contingencies represent varied and uncertain threats, and hence no unique requirement becomes apparent. However, overall US objectives may be met with a wide range of response levels. For example, the status quo could still be reestablished in a conflict area that had been overrun and later retaken. But this type of action might be more costly than one in which rapid deployment of forces permitted early stabilization and a follow-on counterattack. Cost savings to be considered are those resulting from reduced casualties, smaller US force committed, and real estate saved from destruction.

The previously mentioned RAC linear-programming model is a technique to design the least-cost deployment system to meet a stated force-closure schedule. However, this force-closure schedule may not be the most tactically effective for the conflict area considered.

The evaluation of various force-closure schedules for many theater areas created a need for a computerized quick game.

Since its inception early in 1963, quick gaming has been a unique tool of considerable value. In 1 working day, one or two analysts could simulate days or even weeks of combat between conventionally armed military forces of division size or larger. This was possible because the essential characteristic of quick gaming was its simplicity, a feature achieved by aggregating the elements of military combat. Using only the relative firepower of the opposing sides, the terrain conditions, type of units in battle, and tactical defensive postures, the quick-game model determined the casualties incurred by each side and the rate of advance of the attacking force for uniform time increments of 24 hr each.

It was soon realized that the utility of quick gaming could be greatly increased if other assessment models were added for completeness, and if the manual operation were converted to a computer simulation. Then many plays of a given situation could be accomplished in a short period of time. Rapid assessments would permit extensive sensitivity analyses of the impact of uncertain assumptions or numerous changes in the tactical situation on the outcome of the battle.

The objective of the study effort was to produce an acceptable and completely tested theater-level combat simulation. Using the existing quick game as the basic combat model, three new models were added: an air-operations model, which accounts for general tactical-air missions of air superiority, close air support (CAS), and supply interdiction; a logistics model, which

simulates the resupply of deployed combat units, builds stockpiles at designated points in the theater, and simulates the flow of troops and equipment through the theater lines of communication (LOCs), so that a realistic delay exists between units arriving in the theater and being deployed as combat active. In addition the logistics model becomes the prime vehicle for assessing the effects on combat of enemy interdiction of supplies. A third new model was added that would, at least in a rudimentary fashion, simulate the remaining decisions occurring within a deployment-analysis study by providing a procedure for determining where to deploy newly arrived troops, surface-to-air missiles (SAMs), or supplies as they enter the theater ports and landing fields. These actions are handled in the tactical-decision model (TDM).

The study effort proved successful. There now exists a theater-level combat simulation programmed in FORTRAN IV capable of being run on the IBM 7044 computer system. The operating time of the simulation averages 10 sec of computer time for each day of combat, or 6 days of combat per minute of computer time. This time includes data read-in time, assessment time, and data print-out time. The computer program is believed to be thoroughly checked out and ready for extended application during the second half of CY67.

The authors consider the present volume on model logic to be a Mark I version of the quick-game simulation. Modifications will be included as continual development and improvement occurs in a natural evolution process.

This volume is restricted to a description, with detailed flow charts, of the logic of each model within the overall combat simulation. Given a theater scenario with appropriate ground, air, and logistic elements, and the requisite area and terrain conditions, the simulation will assess in a theater-level setting the effectiveness of a given strategy relative to other strategies. The detailed computer program, program-operating instructions, and a description of the required input data will be published as a separate volume.

Computerized QUICK GAME:

A Theater-Level Combat Simulation

Volume I Models

ABBREVIATIONS

ACA	air-control authority
ADA	air defense artillery
AWC	Army War College
CAO	counter air-defense operations
CAS	close air support
CBU	cluster bomblet units
CQG	computerized quick gaming
DIA	Defense Intelligence Agency
FEBA	forward edge of the battle area
FPS	firepower score
GCM	ground-combat model
ICE	index of combat effectiveness
INT	interdiction
LOC	lines of communication
MQG	manual quick gaming
OASD	Office, Assistant Secretary of Defense
ORF	overall-reliability factor
PLP	phase line penetrated
ROAD	reorganization objective army division
SAM	surface-to-air missile
SSKP	single shot (or single salvo) kill probability
STAG	US Army Strategy and Tactics Analysis Group
TDM	tactical-decision model
TOE	table of organization and equipment
UC	unit counter

INTRODUCTION

BACKGROUND

Some of the problems facing today's military planners are the how, when, and where problems of contingency planning: How are troops, supplies, and equipment best transported to a conflict area under certain political or least-cost constraints? Which force-closure schedule gives maximum effectiveness to the strategy employed? Where should the force be applied in the face of alternative contingencies?

The theater-level combat simulation described in the following sections represents a technique of assessment that can determine the relative effect of changes in the tactical situation and certain basic assumptions on the duration and hence the cost of military conflict. Types of changes that can be evaluated are variations in troop availability, presence or absence of good LOCs and hence supply availability, varying levels of tactical air support, and delays imposed by certain barrier techniques.

A simulation of this type has been sorely needed at RAC and will represent a significant addition to its collection of war games and combat simulations already designed.

GENERAL DESCRIPTION

Computerized quick gaming (CQG) simulates, with a high degree of aggregation, theater-level warfare between opposing combat forces. Each of the forces may include varying kinds of infantry, armored, or mechanized units with aerial and artillery support. Intratheater logistics operations, required to support combat troops and tactical air bases, are also simulated.

The quick-game simulation is composed of four separate but interacting models: the ground-combat model (GCM), the logistics model, the tactical-air model, and the TDM. The models referred to here are representations of objects or events in the real world that are idealized insofar as only selected properties of reality are represented, making them therefore less complicated than reality. All the models are deterministic in that the outcome is predictable and the element of chance is absent. Some of the models are mathematical in that properties of the things represented and their interactions are expressed symbolically by means of mathematical expressions. Figure 1 illustrates schematically the model interaction within the overall simulation, indicating some of the input to and output from each model.

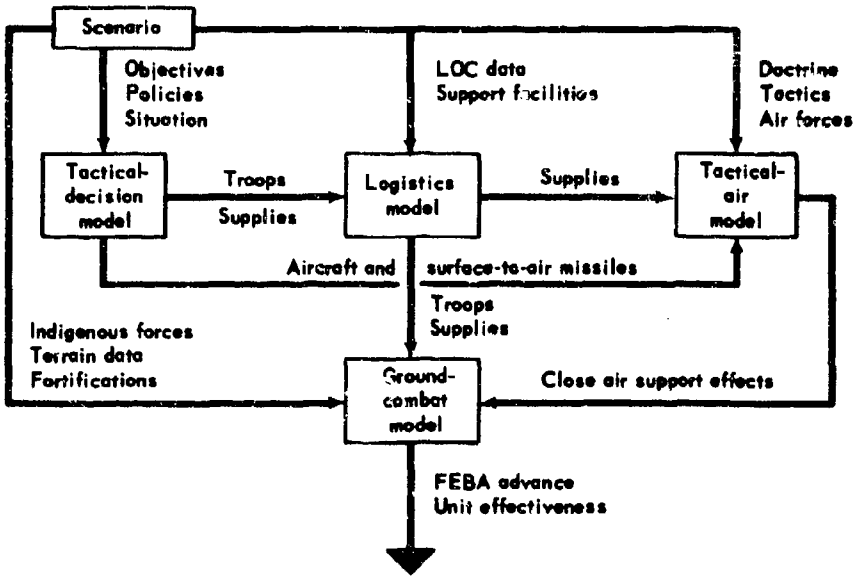

Fig. 1—Computerized-Quick-Game Flow Diagram

The theater of operations is considered to be divided into battle sectors as shown in Fig. 2. The sectors extend from rear areas of one force through the theater to the forward edge of the battle area (FEBA), and into the rear areas of the opposing force. Normally a maximum of one corps force would be deployed in one sector. Each sector is composed of a sequence of segments each of which may be considered to yield a constant trafficability to military units. Adjacent segments differ from one another by some characteristic of military significance that affects overall trafficability, such as terrain changes, natural or man-made barriers, or prepared defensive positions.

The TDM, on the basis of the Red and Blue strategies, the closure schedule for troops and supplies, and the existing military situation, allocates, by sector, the troops, supplies, and equipment needed for effective combat action. The decision model, while simulating an air commander, assigns tactical aircraft to support each battle sector each day.

The logistics model simulates, for each sector, the flow of troops and supplies from the point of debarkation to the forward-echelon supply point. All existing air and ground LOCs are idealized into two LOC systems: one for fixed-wing aircraft and one combining ground and helicopter capability. Enemy interdiction of the LOCs and supply points can result in a degradation of the combat capability of the forces in action.

The air model simulates the effect of tactical aircraft in a combat situation together with the effect of weapons to destroy the aircraft. The presence of transport aircraft is implied in the logistics model in the form of tons per day of airlift capacity, but individual planes are not played. Five types of

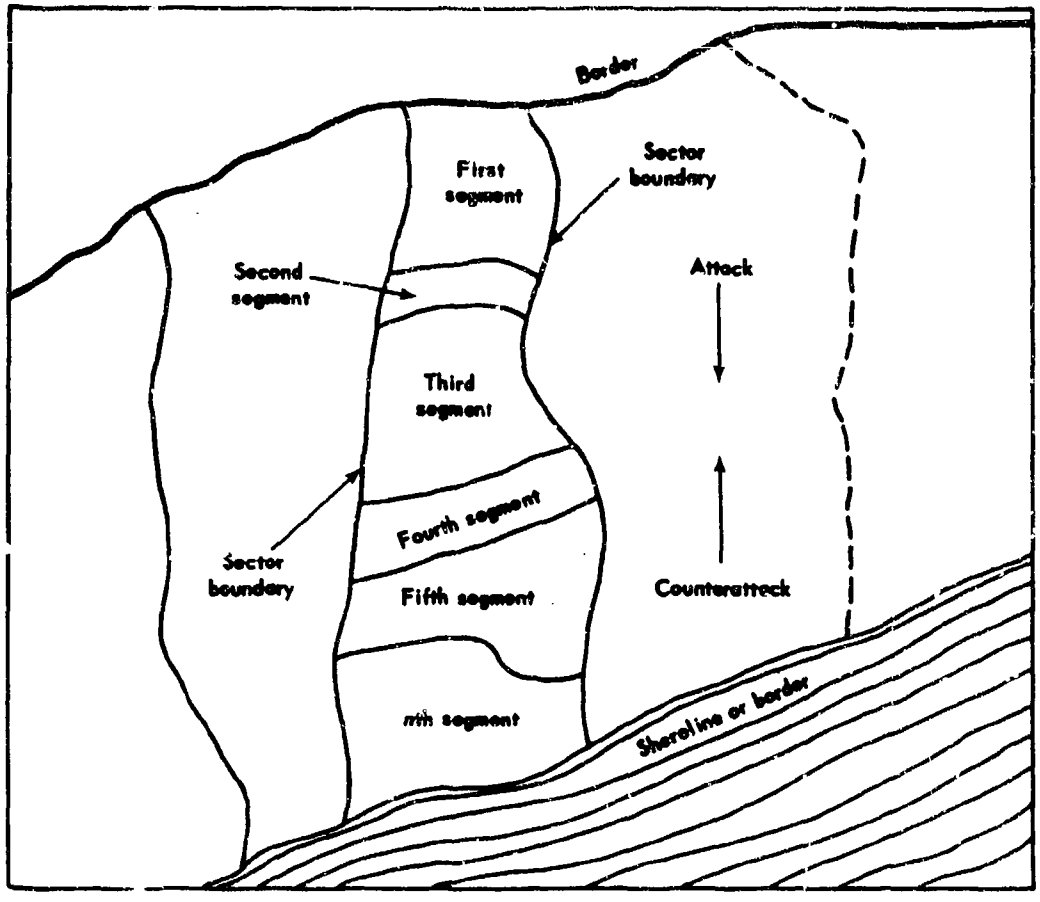

Fig. 2—Schematic Representation of the Battlefield Showing Sectors and Segments

tactical-air mission are simulated in the model as well as the effects of SAMs and air-defense-artillery (ADA) weapons. The five types of air mission are:

(a) SAM suppression. The destruction and neutralization of SAM launchers and controlling radars of SAM sites.

(b) Air-base interdiction. The destruction of parked aircraft at the air base and the loss of air-base capability to sustain a given number of tactical sorties per day.

(c) Air defense. The capability of fighters, interceptors, SAMs, and ADA weapons to destroy enemy attack aircraft.

(d) Close air support. The assistance given to ground-combat units when engaged.

(e) LOC and supply-point interdiction. The reduction of the enemy's flow of supplies in terms of LOC capability and total supplies lost.

The GCM determines for each day the change in the location of the FEBA for each sector. By determining the force ratio and the posture of the engaged troops, the rate of advance of the attacker is determined. The force ratio in terms of opposing combat-effectiveness values, accounts for the presence of

CAS aircraft, supporting artillery, the tactical posture of the troops, and the overall unit effectiveness. Ineffective units are removed from combat and withheld long enough for them to be restored to full combat effectiveness; they are then returned to combat. New units entering the theater are assigned to a particular sector by the TDM, travel through the theater LOC network within the logistics model, and are deployed for combat as new fighting units in the GCM.

Play of the game may be terminated when one of the following four events occurs: (a) a specified number of days has elapsed, (b) the enemy has forced his way through to the friendly ports of debarkation, (c) the defending forces have stabilized the FEBA in all battle sectors, or (d) the friendly forces have everywhere forced the enemy back to some objective line such as the border of the country being defended.

A more complete and detailed description of the principal models will be found in the next four chapters. Flow charts of the models and certain input data will be found in App A.

Chapter 1

THE GROUND-COMBAT MODEL

DEFINITION

The GCM is that portion of CQG that calculates changes in the location of the FEBA.

BACKGROUND

Quick gaming, as described in RAC-TP-76,[1] is a manually operated land-combat model that can be used by one or more persons to determine rapidly the probable outcome of a conflict between conventionally armed WWII and Korean War type military forces of division size or larger. In 1 working day as much as several weeks of combat can be simulated by one or two analysts. This is possible because of the essential simplicity of quick gaming, a feature achieved by aggregating the elements of military combat more than in most other war games.

The main purpose of the GCM is to determine the daily (every 24 hr) changes in the location of the FEBA within each sector. As various parameters are changed during the course of many plays of otherwise similar situations, comparison of the records of the movements of the FEBAs may be used as a measure of the effects of the changes. Thus the model can be used, for example, to determine the effects of changes in the rate of arrival of supplies or troops into the theater. By virtue of the time compression resulting from the use of a computer, it will be possible to simulate several variations of a 2- or 3-month war in about 1 hr. However, simulating operations in other theaters will require more time for the data-development phase.

In 1964 the RAC quick-game model was modified by the adoption of new firepower scores (FPSs) and resultant indexes of combat effectiveness (ICEs) and by changes in its stalemate force ratios, i.e., force-ratio values at or below which the attacking side could not advance.

The ICE of a division is a numerical representation of the firepower of its weapons normalized about a value of 1.00 for a reorganization objective army division (ROAD) infantry division. In computerized quick gaming the ICE of a division is modified only as a function of personnel or material strength. Other game models vary a unit's ICE in accordance with its tactical posture,

but this is not necessary in quick gaming because the effects of changes in posture are reflected in different casualty-rate curves and different movement-rate curves.

The rate-of-advance tables in RAC-TP-76[1] permitted some advance by the attacker in any posture for any force ratio equal to or greater than 1 and no advance for force ratios less than 1. These tables were modified to make the stalemate force ratio dependent on the defender's posture. For example, the attacker of a fortified zone makes no advance until he has more than 1.9 times the force of a defender; in a meeting engagement one to one is a stalemate; and if the defender is in disorganized retreat, the attacker will continue to advance until the force ratio falls to 0.5. These modifications were published in RAC-T-453.[3]

The following sections describe the conversion of the original RAC quick game to the GCM of CQG.

DESCRIPTION OF THE MODEL

The GCM is that portion of CQG that calculates daily changes in the FEBA as the various combat elements interact. In attempting to calculate this advance, the model examines the forces assigned to combat on each side, modifies their ICEs according to their present personnel or material strengths, determines which side is to be the attacker, determines the defender's tactical posture, assesses casualties to all engaged units, and computes the distance the attacker will advance, if any.

The model takes into account the presence of CAS and supporting artillery effects, withdraws units from combat when their combat effectiveness becomes zero, and returns them to combat when enough time has elapsed for them to be restored to full usefulness. It also recognizes gross variations in terrain and takes into account the presence of natural or man-made impediments to movement. There are many factors of actual combat of which the model does not take account, such as the effects of weather, intelligence, communications, or the tactical skill of particular commanders. The entire assessment is founded on the assumption that characteristics of future combat will be similar to those usually displayed by division-sized units in WWII and the Korean War.

To conduct a play of the ground model requires that information be available about the theater battlefield, the troops and weapons involved, the terrain conditions, the tactical postures, and casualty rates and movement rates for each type of unit simulated when encountering various force ratios.

The Battlefield

The battlefield of quick gaming is made up of one or more battle sectors, with sector boundaries being arbitrary lines more or less perpendicular to the FEBA. Within each sector the terrain is described in terms of segments. Each segment is measured parallel to its sector boundary and is of such a length that it can be assumed to have essentially one trafficability condition. The input data describing the battlefield indicates the number of sectors (a present limit is 10 sectors/theater) and information on each sector indicating the length, terrain type, barriers, and trafficability of each segment in sequence.

Terrain

The GCM identifies three types of terrain as follows:

Type A. Open, flat, or generally rolling terrain with a minimum of timber. It provides good cross-country movements for all types of units and is considered very favorable for armored operations.

Type B. Marginal terrain for armored operations. It permits only limited cross-country movement of wheeled vehicles because of its ruggedness, streams, timber, and other natural obstacles. It is suitable for foot-troop movement.

Type C. Mountainous, jungle, or thickly wooded terrain. All vehicles are restricted to existing roads. Cross-country movement by foot troops is possible but difficult.

Barriers

In any type of terrain there may be barriers, either natural or man-made that affect the movement rate of troops and vehicles encountering them. Examples of such barriers are wide, unfordable rivers; deep, rough chasms; or extensive minefields.

Segments

Each battle sector is composed of a continuous sequence of segments each of which differs from those adjacent to it in terrain type or in the presence of a barrier, or both. There are six kinds of segments possible: one for each type of terrain without a barrier and one for each type with a barrier. The kind of segment is one factor in determining the rate of advance in that segment (see Fig. 2).

Combat Units

In general the smallest discrete combat unit simulated in the GCM is a division, although an occasional unit of lesser size may be included without seriously stressing the applicability of the model. This condition exists because the movement, casualty, and replacement rates used are all based on historical data applicable to divisions. If many units of company or battalion size were to be individually simulated, the incorporated rates would be inapplicable.

Each division is characterized by its ICE, personnel strength expressed as a percentage, materiel strength in days of supply, and the proportion of its component subunits that can move at vehicle rates (armored, mechanized, or motorized) as distinguished from those that can only move at infantry rates. Special forces, over-the-beach assault troops, paratroops, and other special-purpose units are not simulated.

Combat units may be in any one of three classes: Class A, assigned to combat; Class I, incomplete; or Class W, withdrawn from combat. Class A units are those considered to be actually doing the fighting; they are assessed casualties and allotted replacements if desirable on a daily basis. Class I units are those coming into combat before their full complement of men and materiel has arrived at the FEBA. When a unit has taken sufficient casualties

to reduce its combat effectiveness to zero it is placed in Class W. These units do not contribute to the force ratio and remain out of combat long enough to be restored to full strength. They are then automatically transferred to Class A.

Consideration was given to the inclusion of a Class R, which would be composed of reserve units at or near 100 percent strength. There were no problems associated with creating the class or in deciding how and when to assign units to it, but the problems involved in deciding when to transfer units from Class R to Class A were perplexing. Certainly a unit withdrawn from combat because its losses had reduced it to zero effectiveness ought to be ineligible for reassignment for at least several days. Then, although not yet fully recovered, it might be returned to combat under circumstances of great need. However, holding it in reserve for a longer period of time would permit it to more nearly regain its full strength. Under different circumstances there would be different points between just barely recovered and being fully recovered when a commander might actually order a withdrawn unit returned to combat. The difficulties in establishing defensible rules for simulating the variety of judgmental processes involved precluded the inclusion of any provision for reserve units in this prototype program. (This area will be developed further however.) In the interests of simplicity it was decided that each full-strength unit at the FEBA would be assigned to combat and kept in combat until its casualties were so great that it could no longer fight. It would then be withdrawn and remain withdrawn until it was rebuilt to full strength. The cycle would then be repeated.

Determination of Attacker or Defender

In a manual war game the designation of attacker and defender and the selection of postures can be done by the human participants. In a computerized war game such decisions must be made by rules. In CQG the net ICEs, i.e., the unit ICEs derived from tables of organizations and equipment (TOE) modified by the defenders' effectiveness curve, of the two sides are compared each day. The side with the greater net ICE is declared to be the attacker. If the ICEs are equal, the side that had been attacking is considered to continue to attack. If there are no reinforcements or significant changes in CAS or artillery support, the application of this rule would lead to a more or less realistic attack and counterattack sequence reflecting the results of an attacking force receiving a higher casualty rate than the defending force.

Postures Simulated

Seven choices of tactical posture are open to a defender.

Fortified Zone. A defensive position of a depth and hardness considered typical of the French Maginot Line or the German Siegfried Line. It implies concrete (or equivalent) protected gun emplacements, preplanned fire coverage, heavily protected troops and supplies, and strong barriers to combat vehicles.

Prepared Position. The next-lower level of defense after a fortified zone. It is preplanned, constructed over a long period (weeks, months, or even years), and for a depth of at least 5 miles provides solid protection to men and materiel. It differs from a fortified zone in using less permanent construction (i.e., earth and timbers in lieu of concrete) and in being less elaborate.

Hasty Position. An arrangement requiring from 8 hr to a week or more to prepare. Maximum attention is given to the judicious use of terrain features, the selection of weapons sites, and the preparation of protective open earthworks.

Meeting Engagement. Virtually self-explanatory. Neither side is assumed to have more than the most hastily prepared protection. Both sides make maximum use of the available natural terrain features, but neither is presumed to have an advantage.

Delaying Action. The defender is capable of forcing the attacker to deploy frequently from his advancing formations. The defender is either unable to or does not wish to hold his present position but retains his tactical integrity.

Orderly Retirement. The defender maintains only light reconnaissance forces in contact with the enemy, although occasional battles of the delaying-action type may be fought on especially advantageous terrain.

Disorderly Retreat or Rout. Self-explanatory. The rate of advance is constrained by the nature of the terrain, the capability of the attacker to sustain movement, and the attacker's necessity to retain tactical integrity since some uncertainty always exists concerning the defender's capabilities in reserve and his intent.

Four of these postures do not involve preparation of the area. They are meeting engagement, delaying action, organized withdrawal, and disorderly retreat. To select a posture for the defender from among these choices, the concept of unit effectiveness is used. As a division suffers casualties, its effectiveness decreases more rapidly when it is attacking then when it is defending. Similarly if a division gets low on supplies, its effectiveness is also reduced. The minimum effectiveness resulting from personnel and materiel shortages is the governing factor for selecting the defensive posture.

If the postures listed above are referred to in a numerical sequence such as: 4–meeting engagement, 5–delaying action, 6–organized withdrawal, 7–disorderly retreat, and 8–holding posture, the following expression allows the posture to be determined based on the average effectiveness of attacker and defender.

$$\text{Posture value} = 8 - [E_a (1 + \min(3, 4R))]$$

Where the term E_a indicates the condition of the attacker, such that $E_a = 0$, when the attacker's effectiveness is zero, and $E_a = 1$, when attacker's effectiveness is nonzero. The expression R is an average effectiveness ratio such that

$$R = \frac{\text{average effectiveness of defender}}{\text{average effectiveness of attacker}}$$

(When the effectiveness values are equal and nonzero, the posture calculated is 4–meeting engagement.)

CQG can also simulate any of three postures that involve the preparation of an area. They are the defense of a fortified zone, of a prepared position, or of a hasty position. At present the location of such prepared areas must be given as an input to the model.

FEBA Movement. If there is any movement of the FEBA, it is always in a direction that is favorable to the attacking force. The extent of the movement is a function of the force ratio, the terrain, the posture of the defender,

and the relative ability of the attacker to move at infantry or armored rates. The maximum rate of movement permitted is 22.5 miles/day. This rate would apply if (a) the force ratio were 5 or more to 1; (b) the terrain relatively flat, unobstructed, and well suited to vehicular passage; (c) the defender in a posture of disorderly retreat; and (d) the attacker fully capable of moving at armored (vehicular) rates. If this maximum rate seems low it is well to remember that it is an average rate and that it applies to forces of division size or larger over an extended period of time.[4]

Casualties and Replacements

Quick gaming requires a casualties and replacements model representative of combat activities at division level, but useful fundamental numbers on which such a model could be based are quite scarce. "The Staff Officers' Field Manual,"[5] the primary source of authoritative numbers regarding casualties, presents a considerable range of rates. For example, an infantry division "attacking in a meeting engagement" can be expected to take about 2.7 percent of its assigned strength in casualties each day, but this rate applies only to periods of 5 days or less. For more than 5 days the number applicable to an infantry division in the combat zone is 18 percent casualties per month (0.6 percent/day, average). On a higher level the planning figure recommended is 5.91 percent of "total theater strength per month" (0.2 percent/day, average). All the preceding values include both battle and nonbattle casualties.

A recent RAC paper by Best[6] gives many examples of casualty rates that have occurred historically so far as can be determined from available records. Much information is presented about both US and foreign (mostly British and German) units' casualties under various circumstances in WWII and Korea. The results, as would be expected, are widely distributed. However, when grossly aggregated Best concludes that "The typical [casualty] rate for a German infantry division was about 0.2% per day" and that "this figure is not substantially different from the figure for US or British divisions." It is also the value obtained from FM 101-10 as a guide for anticipating casualties per day in a theater as a whole.

Because of these two sources for casualty data, it was the initial intent of this paper to incorporate the field-manual casualty data into the casualty assessment. The weakness of this data was that it gave casualty rates as a function of posture but independent of force ratio.

Before the final draft of the report was submitted, new data became available that presented historical casualty rates as a function of type of combat engagement and force ratio, to the extent that it was possible to measure either item. These data were a result of a substudy done for RAC by the Historical Evaluation and Research Office (HERO).[7]

Shown in Table 1 are the casualty rates for each of the eight postures recognized by the field manual FM 101-10.[5] Figure 3 represents an initial expression of casualty data as a function of tactical posture and force ratio from the HERO data. (The HERO casualty data are now being used in the quick-game simulation.) In each representation the rates are percentage casualties per division unit per day. Casualty rates for forces such as paratroops or over-the-beach assault troops are not given because such specialized short-term operations are not included in quick gaming.

TABLE 1

Casualty Rates for Computerized Quick Gaming[a]

(Percent)

Situation	Attacker		Defender	
	Infantry division	Armored division	Infantry division	Armored division
Fortified zone	6.6/3.5	5.5/2.9	3.5/1.9	2.9/1.6
Prepared position	4.1/2.2	3.4/1.8	2.2/1.3	1.8/1.1
Hasty position	4.1/2.2	3.4/1.8	2.2/1.3	1.8/1.1
Meeting engagement	2.7	2.3	1.8	1.5
Delaying action	1.6	1.3	1.0	0.8
Organized retirement	1.6	1.3	1.0	0.8
Disorderly retreat	1.6	1.3	1.0	0.8
Holding	1.0	0.8	1.0	0.8

[a]Where two values are given, the larger applies to the first day and the smaller to subsequent consecutive days.

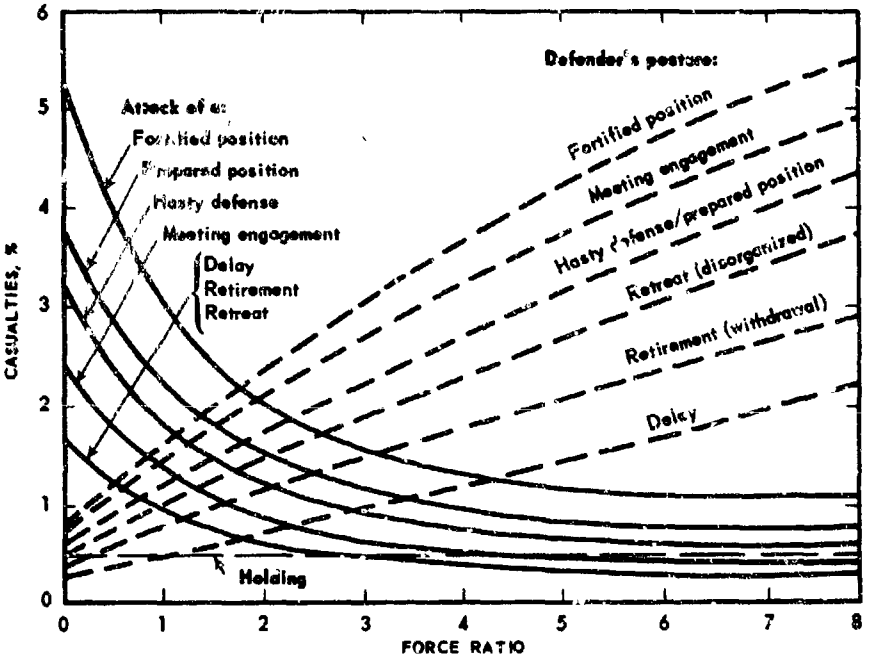

Fig. 3—Division Casualty Rates as a Function of Force Ratio

Replacement of personnel losses may be governed by one of two methods. Either units receive individual replacements at a fixed rate of TOE strength per day or the combat units may be fought with no replacements until they are ineffective because of casualties at which time the entire unit is withdrawn and replaced with a new unit. These two schemes represent the present US and Soviet thinking respectively on the replacement problem.

However, the quick game has been designed to allow either side to incorporate whichever method it wants to use. In addition, different rates of replacement may be used for units in combat and units in a withdrawn status. If the unit replacement rule is used an upper limit must be set on the number of units that can be replaced.

Holding Operations

A common fault of war games is that they permit an intensity of combat far above that which could normally be expected of real troops. Even quick gaming has this defect. However, in a step toward more realism CQG includes, at least for the three postures involving the attack of an enemy in a prepared posture, the concept of a holding operation. Specifically, each time the attacker accumulates approximately another 10 percent casualties (an arbitrarily selected value) during the attack of a prepared enemy, he reduces his activities to a point just sufficient to enable him to hold his position. He maintains this level of effort for 3 days during which there is no movement of the FEBA, and during which the casualty rate is that associated with the holding posture. At the end of this 3-day period the original attacker resumes the attack, provided that there has been no significant change in the composition of the forces involved. Since the 3-day period is arbitrary, any other value may be used if desired.

This same concept of a holding operation is used to halt the defending nation's forces at the national boundary should they succeed in pushing the enemy out of the country. If that situation arises, no matter how high the force ratio might go in favor of the defending nation, the FEBA will remain at the border. The reason for this rule is that the defending nation is presumed to be satisfied when the invading force is pushed out of the country. This rule could be changed readily to permit the war to continue into an adjacent country if this were desired.

Unit Effectiveness

A combat unit ordinarily ceases to be useful long before the last man is wiped out, but the exact number or percentage of casualties required to reduce a unit to zero effectiveness is an indeterminate variable that depends on virtually everything. However, the effects of casualties must be taken into account, and this is done in Fig. 4, which was first developed by the Army War College (AWC) and later published in RAC-TP-76.[1]

These curves, showing the degradation of unit effectiveness as a function of casualties when attacking and when defending, are also shown in tabular form in Table 2.

The reduction in combat effectiveness is not directly proportional to the percentage of casualties. A small percentage of casualties in a fresh,

full-TOE unit has, on the average, a negligible effect. A small additional percentage tends quickly to affect the unit's effectiveness. For conventional battle this is due primarily to the usual distribution of casualties, the critical factor being that the infantry, mainly in front-line units, suffers more than 80 percent of the casualties. Furthermore, the effect of a given casualty level is greater on an attacking unit than on a defending unit. This is because an attack, to be

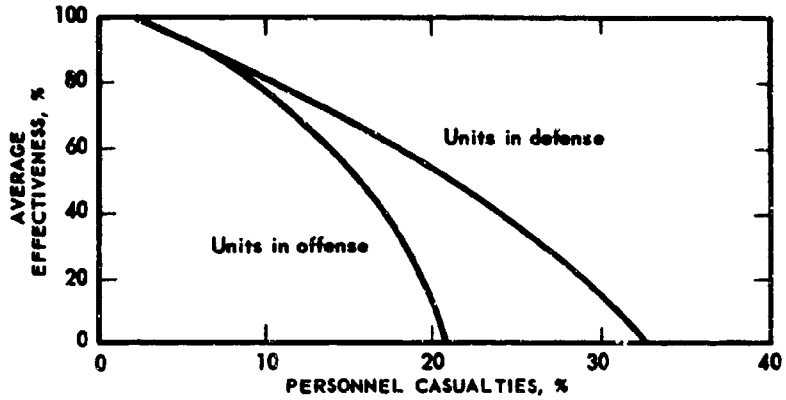

Fig. 4—Unit Combat Effectiveness as a Function of Personnel Casualties, Division Level

TABLE 2

Division Effectiveness as a Function of Accrued Casualties

Strength, %	Casualties, %	Effectiveness attacking	Effectiveness defending	Strength, %	Casualties, %	Effectiveness attacking	Effectiveness defending
100	0	100	100	82	18	31	60
99	1	100	100	81	19	21	57
98	2	100	100	80	20	11	54
97	3	98	98	79	21	0	51
96	4	96	96	78	22	0	48
95	5	94	94	77	23	0	44
94	6	92	92	76	24	0	40
93	7	90	90	75	25	0	36
92	8	86	88	74	26	0	32
91	9	82	86	73	27	0	28
90	10	78	84	72	28	0	24
89	11	74	81	71	29	0	19
88	12	69	78	70	30	0	14
87	13	64	75	69	31	0	9
86	14	59	72	68	32	0	4
85	15	53	69	67	33	0	0
84	16	47	66	<67	>33	0	0
83	17	39	63				

successful, normally requires rapid movement and good coordination. A defending unit requires relatively less movement and lower interunit and intraunit coordination. Therefore it can accomplish its task more effectively than an attacking unit having the same percentage of casualties. Effectiveness in this sense may be regarded as a measure of the organizational integrity of a unit.

Close Air Support

(C) Manual quick gaming (MQG) was only concerned with the actions of ground forces, but the computerized version incorporates a model to simulate air activities, some of which are considered to be in close support of ground troops in combat. On the basis of information from the Close Air Support Board[8] and the Combat Developments Command,[9] it was determined that the ICE equivalent of a typical US CAS sortie with an average load of ammunition would be 0.0036. These same sources indicated that the enemy would have to use three sorties to produce a similar effect, so an ICE of 0.0012 was assigned to enemy aircraft in the CAS role (see Chap. 3).

Supporting Artillery

(U) Supporting artillery is simulated in each sector by an ICE value proportional to the number of combat divisions in the sector. When a division is initially put into Class A (assigned to combat), an ICE value, representing a division slice of the total ICE of the supporting artillery to be available in the theater, is added to the sector's supporting artillery ICE. Thereafter, no matter what the condition or posture of that division, its supporting artillery ICE remains active. This simple treatment of artillery is based on the premise that artillery units are rarely overrun, seldom suffer severe casualties, and, in general, can continuously perform their missions for extended periods of time. Therefore, once in place, supporting artillery remains available, in terms of its ICE, for the rest of the play. The effectiveness of supporting artillery is degraded, however, if the supply level in any sector gets low enough to cause rationing or less than maximum expenditures.

(U) There is the possibility that all the units on both sides in some sector would suffer sufficient casualties to force them into Class W. If that happened the only ICEs available would be those attributable to CAS and the supporting artillery. Were the program permitted to carry out an assessment in that sector, it might produce an advance on the part of one side or the other. This result seems to be unrealistic, so the program is designed to forbid any change in the FEBA in a sector that has no Class A units on either side.

Rates of Advance

(U) In CQG the rate of advance of the attacking force is considered to be a function of the mobility of the attacker, the posture of the defender, the condition of the terrain, and the attacker-to-defender force ratio. The mobility of the attacker is described as "infantry" for those combat personnel who must walk or "armored" for those who can ride. The rates used in the actual calculations are proportioned on the basis of the number of infantry battalions and

armored battalions in the division. If a division had 50 percent infantry battalions and 50 percent mechanized battalions, the movement rate would be an average of the infantry and armored rates given. Generally, armored or mechanized units are classified as "armored" and all others as "infantry." The defenders' postures and the terrain conditions are those described earlier in this chapter. There is, of course, no rate of advance associated with the holding posture.

The force ratio is a pure number obtained by dividing a numerical measure of the combat capability of the attacker by a similarly derived measure of the defender. In CQG this capability is called an ICE but other measurement schemes may be used just as readily if desired.

Infantry and armored rates of advance in terrain with and without barriers are set forth in Tables 3 to 6. These rates were derived from basic data that provided movement rates in terms of yards per hour.[10] These basic data were translated into miles per day by normalizing against historical daily rates in Korea and by making appropriate adjustments for the factors of posture and terrain.

Indexes of Combat Effectiveness

The measure of combat effectiveness used in the model is called the ICE, a number that purports to indicate the worth of a combat unit in comparison to some standard unit. The ICEs used in CQG are derived from more fundamental numbers called firepower potential scores (FPS). By knowing the lethal area of a type of round of ammunition (given as a function of personnel posture) and multiplying by an assumed daily expenditure rate for this type of ammunition, there results a firepower potential score in terms of a lethal area per day. When each of the firepower scores for all the weapons of the division have been added and then normalized about the firepower score of the standard unit, the result is the ICE value for the unit considered. Table 7 shows the FPS used for most of the US and Soviet weapons.[11] Force ratios can be constructed using only FPS; however for division sized units the ICEs are more convenient. The ICEs used in the initial play of CQG are given in Table 8.

OPERATION OF THE MODEL

The flow chart of the GCM (see Fig. A1) shows the logical process on which the computer program for the GCM was based. The following description of the operation of the GCM is directly related to Fig. A1, although the computer program actually performs some functions in an order other than that shown in the flow chart. These differences, necessary to accommodate the needs of the other models, do not affect the logic of the model.

The flow chart shows the sequence of events involved in assessing ground combat in a given sector. This sequence is used at least once for each sector for each day of combat. If, in a given sector, a segment boundary is reached in less than a day, the cycle is repeated for that sector to account for the remainder of the day.

The program starts by checking to find out if there are ground units available for combat (Class A) in the sector. If there are none on either side

(C)

TABLE 3

Infantry Division Movement Rates, No Barriers

(In miles per 24 hr)

Force ratio[a]	Posture																				
	Fortified zone			Prepared position			Hasty position			Meeting engagement			Delaying action			Orderly retirement			Disorganized retreat		
	Terrain type																				
	A	B	C	A	B	C	A	B	C	A	B	C	A	B	C	A	B	C	A	B	C
	Stalemate force ratio																				
	1.90	1.90	1.90	1.60	1.60	1.60	1.30	1.30	1.30	1.00	1.00	1.00	0.70	0.70	0.70	0.50	0.50	0.50	0.50	0.50	0.50
0.5	—	—	—	—	—	—	—	—	—	—	—	—	—	—	—	0.0	0.0	0.0	0.0	0.0	0.0
1.0	—	—	—	—	—	—	—	—	—	0.0	0.0	0.0	2.70	1.80	0.70	5.56	3.40	1.90	8.10	5.10	2.90
1.5	—	—	—	—	—	—	0.25	0.15	0.11	1.65	1.00	0.60	4.40	2.80	1.40	7.00	4.90	2.40	12.20	7.70	4.20
2.0	0.15	0.07	0.06	0.76	0.44	0.26	1.90	0.90	0.50	3.30	2.00	1.10	6.10	3.80	2.10	9.80	6.10	3.40	15.40	10.10	5.40
2.5	0.37	0.19	0.14	1.20	0.70	0.46	2.50	1.50	0.90	4.30	2.50	1.40	7.60	4.60	2.50	11.10	7.10	3.80	17.00	11.20	6.10
3.0	0.60	0.34	0.23	1.80	1.00	0.65	3.60	2.00	1.00	4.90	2.90	1.70	8.40	5.00	2.90	13.00	8.00	4.40	18.00	12.00	6.80
3.5	1.00	0.50	0.40	2.50	1.40	0.90	4.00	2.20	1.30	5.60	3.30	1.90	9.00	6.00	3.20	14.30	9.00	5.00	19.00	13.00	7.20
4.0	1.30	0.80	0.50	2.90	1.70	1.10	4.40	2.60	1.60	6.00	3.90	2.00	9.80	6.60	3.50	15.50	10.00	5.60	19.50	13.20	7.80
4.5	1.50	0.90	0.60	3.30	2.00	1.15	5.05	3.05	1.65	6.80	4.15	2.10	10.90	7.15	3.75	16.25	11.00	5.65	19.75	13.65	7.75
≥ 5.0	1.70	1.00	0.70	3.70	2.30	1.20	5.70	3.50	1.70	7.60	4.40	2.20	12.00	7.70	4.00	17.00	12.00	5.70	20.00	14.00	8.00

[a](Attacker's net ICE)/(defender's net ICE).

TABLE 4

(C) Infantry Division Movement Rates, with Barriers

(In miles per 24 hr)

Force ratio[a]	Posture																				
	Fortified zone			Prepared position			Hasty position			Meeting engagement			Delaying action			Orderly retirement			Disorganized retreat		
	Terrain type																				
	A	B	C	A	B	C	A	B	C	A	B	C	A	B	C	A	B	C	A	B	C
	Stalemate force ratio																				
	1.90	1.90	1.90	1.60	1.60	1.60	1.50	1.50	1.50	1.00	1.00	1.00	0.70	0.70	0.70	0.30	0.30	0.30	0.30	0.30	0.30
0.5	—	—	—	—	—	—	—	—	—	—	—	—	—	—	—	0.00	0.00	0.00	0.00	0.00	0.00
1.0	—	—	—	—	—	—	—	—	—	0.00	0.00	0.00	1.70	1.10	0.60	4.70	3.10	1.60	6.90	4.70	3.30
1.5	—	—	—	—	—	—	0.00	0.00	0.00	1.36	0.90	0.55	3.35	2.20	1.15	5.80	3.90	2.00	9.60	6.30	4.10
2.0	0.10	0.06	0.04	0.56	0.34	0.20	1.30	0.70	0.40	2.70	1.80	1.00	5.00	3.30	1.70	8.10	5.50	2.90	11.40	7.60	4.80
2.5	0.24	0.11	0.10	0.90	0.40	0.36	1.80	1.10	0.60	3.20	2.20	1.20	6.00	4.10	2.20	9.20	6.40	3.30	12.80	8.70	5.80
3.0	0.39	0.21	0.18	1.35	0.86	0.52	2.70	1.70	1.00	3.70	2.60	1.40	6.80	4.50	2.50	10.50	7.40	3.70	14.00	9.60	6.30
3.5	0.60	0.30	0.30	1.70	1.20	0.66	3.00	2.00	1.20	4.20	3.00	1.60	7.30	5.00	2.70	11.50	8.40	4.30	15.00	10.40	7.00
4.0	0.80	0.50	0.40	2.00	1.40	0.80	3.20	2.30	1.35	4.70	3.40	1.80	7.80	5.70	2.85	12.00	9.40	4.80	16.00	11.00	7.30
4.5	0.90	0.60	0.45	2.30	1.60	0.95	3.55	2.50	1.50	5.15	3.80	2.00	8.40	6.25	3.00	12.50	9.85	5.60	16.50	11.50	7.65
≥ 5.0	1.00	0.70	0.50	2.60	1.80	1.10	3.90	2.70	1.60	5.60	4.20	2.20	9.00	6.80	3.10	13.00	10.30	6.40	17.00	12.00	8.00

[a](Attacker's net ICE)/(defender's net ICE).

(C)

TABLE 5

Armored, Mechanized, or Motorized Division Movement Rates, No Barriers

(In miles per 24 hr)

Force ratio[a]	Posture																				
	Fortified zone			Prepared position			Hasty position			Meeting engagement			Delaying action			Orderly retirement			Disorganized retreat		
	Terrain type																				
	A	B	C	A	B	C	A	B	C	A	B	C	A	B	C	A	B	C	A	B	C
	Stalemate force ratio																				
	1.95	1.95	0.0	1.70	1.70	0.0	1.36	1.36	0.0	1.00	1.00	0.0	0.74	0.74	0.0	0.50	0.50	0.50	0.50	0.50	0.50
0.5	—	—	—	—	—	—	—	—	—	—	—	—	—	—	—	0.00	0.00	0.00	0.00	0.00	0.00
1.0	—	—	—	—	—	—	—	—	—	0.00	0.00	—	5.20	2.40	—	13.00	8.70	1.00	15.00	11.00	1.30
1.5	—	—	—	—	—	—	0.66	0.18	—	2.90	1.25	—	8.30	3.70	—	16.00	10.00	1.60	18.10	12.80	1.90
2.0	0.23	0.05	—	0.86	0.27	—	2.70	0.80	—	5.60	2.45	—	11.00	5.00	—	17.40	11.00	2.10	20.00	13.80	2.40
2.5	0.56	0.14	—	2.00	0.66	—	4.00	1.10	—	7.30	3.40	—	13.00	6.20	—	18.50	11.60	2.50	20.80	14.30	2.80
3.0	0.90	0.22	—	3.10	1.10	—	5.50	1.90	—	8.90	4.20	—	14.00	7.40	—	18.90	12.00	2.90	21.50	14.50	3.20
3.5	1.30	0.31	—	4.00	1.40	—	6.50	2.50	—	10.30	4.80	—	15.00	8.50	—	19.20	12.30	3.20	21.90	14.60	3.60
4.0	1.60	0.40	—	4.70	1.60	—	7.80	3.00	—	11.60	5.40	—	16.00	9.50	—	19.50	12.50	3.50	22.20	14.70	3.90
4.5	2.00	0.55	—	5.35	1.80	—	8.65	3.50	—	12.40	5.90	—	16.50	10.00	—	19.80	12.60	3.70	22.35	14.80	4.10
≥ 5.0	2.40	0.70	—	6.00	2.00	—	9.50	4.00	—	13.00	6.30	—	17.00	10.50	—	20.00	12.70	3.90	22.50	14.90	4.30

[a](Attacker's net ICE)/(defender's net ICE).

TABLE 6

(C) Armored, Mechanized, or Motorized Division Movement Rates, with Barriers

(In miles per 24 hr)

Force ratio[a]	Posture																				
	Fortified zone			Prepared position			Hasty position			Meeting engagement			Delaying action			Orderly retirement			Disorganized retreat		
	Terrain type																				
	A	B	C	A	B	C	A	B	C	A	B	C	A	B	C	A	B	C	A	B	C
	Stalemate force ratio																				
	0.0	0.0	0.0	1.85	0.0	0.0	1.43	0.0	0.0	1.00	0.0	0.0	0.74	0.74	0.0	0.50	0.50	0.50	0.50	0.50	0.50
0.5	—	—	—	—	—	—	—	—	—	—	—	—	—	—	—	0.00	0.00	0.00	0.60	0.60	0.80
1.0	—	—	—	—	—	—	—	—	—	0.00	—	—	3.20	1.50	—	7.20	3.70	1.00	9.10	7.20	0.80
1.5	—	—	—	—	—	—	0.18	—	—	1.25	—	—	4.50	2.45	—	8.40	4.80	1.40	9.90	7.60	1.20
2.0	—	—	—	0.16	—	—	0.80	—	—	2.45	—	—	5.80	3.40	—	9.40	5.60	1.70	10.50	7.90	1.60
2.5	—	—	—	0.40	—	—	1.10	—	—	3.40	—	—	6.80	4.30	—	10.00	6.30	2.00	11.00	8.20	2.00
3.0	—	—	—	0.60	—	—	1.50	—	—	3.90	—	—	7.80	5.10	—	10.30	6.90	2.20	11.40	8.50	2.20
3.5	—	—	—	0.80	—	—	1.80	—	—	4.40	—	—	8.30	5.80	—	10.60	7.40	2.30	11.80	8.80	2.50
4.0	—	—	—	1.10	—	—	2.20	—	—	4.80	—	—	8.80	6.40	—	10.80	7.80	2.40	12.10	9.10	2.70
4.5	—	—	—	1.25	—	—	2.60	—	—	5.10	—	—	9.20	6.80	—	10.90	8.20	2.50	12.30	9.30	2.80
≥ 5.0	—	—	—	1.40	—	—	3.00	—	—	5.30	—	—	9.50	7.00	—	11.00	8.40	2.60	12.40	9.40	2.90

[a](Attacker's net ICE)/(defender's net ICE).

(C) TABLE 7

Firepower Scores for US and Soviet Weapons

(Pacific Theater)

US weapons	FPS	Soviet weapons	FPS
7.62-mm rifle	1	7.62-mm rifle	1
7.62-mm MGL	12	7.62-mm MGL	12
3.5-in. rocket launcher	12	40-mm rocket launcher	12
40-mm grenade launcher	9	90-mm rocket launcher	22
90-mm recoilless rifle	100	90-mm recoilless rifle	90
106-mm recoilless rifle	101	75-mm recoilless rifle	78
HAW/TOW	128	160-mm mortar	211
81-mm mortar	293	82-mm mortar	293
107-mm mortar	330	120-mm mortar	316
105-mm howitzer	324	122-mm howitzer	360
155-mm howitzer	1486	152-mm howitzer	689
8-in. howitzer	1447	130-mm gun	444
90-mm tank gun	198	140-mm rocket launcher	307
M60 tank w/105-mm gun	347	85-mm tank gun	209
		100-mm tank gun	301
		115-mm assault gun	249

(C) TABLE 8

Unit ICE Values used in CQG: Initial Play

Unit	ICE
US infantry division	1.00
US airmobile division	0.87
US airborne division	0.74
Thailand infantry division	0.48
South Vietnam infantry division	0.40
ROK infantry division	0.54
ROK marine division	0.68
Chinese infantry division (standard)	0.58
Chinese infantry division (light)	0.44
North Vietnam infantry division	0.42
North Korean infantry division	0.48
North Korean tank division	0.28

then the program jumps to F, thereby skipping all the computational steps dealing with ICE, force ratio, posture, rate of advance, and casualties. This condition would not usually exist, but could occur either because no units had yet arrived in the sector or because prior combat had caused sufficient casualties to force the units to withdraw.

(U) In step A1 a count of the number of Class A units on the attacking side is entered into a UC register. If the attacker has no Class A units, the program switches immediately to A2; otherwise it goes to B.

The program cycles through the loop from D to or through the question, "Is UC = 0 ?" until each Class A unit on the side has been accounted for. One result is the current total ICE of the Class A units on a side in the sector being considered. The other result is the sum of the percentage effectiveness values used. This sum is contingently necessary to determine the defender's posture.

After the ICEs for the ground forces on both sides have been determined, the program key is reset to start with the attacker in the next cycle (change side to j). The ICE of each side is then increased if CAS and/or supporting artillery are available. At this point the force ratio is formed and its value checked. If it is less than 1 and the defending side has at least one Class A unit, the defender and attacker exchange roles. A side without any Class A units may not attack because it is assumed he has no front-line troops available to advance the FEBA.

If the force ratio is equal to or greater than 1, a similar check is made to ensure that the attacker has at least one Class A unit. If the attacker has no Class A units and the defender has at least one, the attacker and defender exchange rates. If neither side has Class A units, this part of the program is skipped.

The personnel-effectiveness curve used to this point was that applicable to a defending unit. It is now necessary to recompute the attacker's ICE using the curve applicable to an attacking unit. (See Fig. 4)

The program next checks to see if the FEBA is at the border. If it is and the friendly (host country) force is the attacker, the posture is defined to be number 8, holding, and the program skips to G. If these conditions do not exist it goes to H.

At H the force ratio is again computed, this time using the revised ICE value for the attacker. The description of the terrain between FEBA and the next segment boundary is then examined. If it includes a record of the presence of a prepared defensive position, the appropriate posture is selected from among the first three. In the absence of a prepared defensive position the posture is determined by the average effectiveness of the attacker's and defender's Class A units.

If one of the first three postures is selected, the program checks to see which side prepared the position. If the current defender prepared the area, the rates of advance applicable to the determined posture are appropriate. However, if the current defender did not prepare the position, he is presumed to be in less desirable defensive conditions, and the rates of advance applicable to the next weaker posture are used. Postures 4 to 7 do not involve such a question.

All of these paths ultimately arrive at point D where, depending on the posture, one of several paths may be followed to point E or F. If it is the first or a subsequent (active) battle day when the attacker is attempting to advance, the appropriate casualty rate is chosen and the program goes to E for calculation of the movement of the FEBA. If it is a subsequent (quiet) day when the attacker is exerting only enough effort to hold his position, a lower casualty rate is specified and the program goes to F, thereby skipping the calculations concerned with FEBA movement.

A similar set of paths is followed for postures 2 and 5. For any of the other four postures, since the casualty rate has already been determined, the program goes directly to E.

The first step at point E is to calculate the rate of advance. The rate is an average of the rates for armor and for infantry according to the relative proportions of armored and infantry units in the attacking force.

The distance the attacker could advance in the time available at that rate is next calculated. Normally the time available will be 24 hr, but if the distance to the next segment boundary D_B, determined earlier, is less than the distance that could be covered in the available time at the given rate D_R, then a segment boundary will be reached in less than the available time. This means that a new rate of advance becomes applicable with less than 24 hr available on the next segment in this sector. (More information on this subject appears later.)

The distance the FEBA will be moved D' is set equal to the lesser of D_B and D_R. If they are equal (an unlikely possibility) the program says $D' = D_B$. This ensures that, if the boundary represents the end of a battle through a prepared defensive area, the battle-day counter will be reset to zero.

Next, the position of the FEBA is appropriately changed and the location of the new FEBA is checked to see if it represents defeat for Blue (the friendly forces). If it does, the program jumps to point J. If it does not, the next check is to see if the attacker has gone as far as the time allows. If he has, casualties are assessed for each side for the total time that was available. (Time will be recorded as a number equal to or less than 1. This stands for 1 day and is dictated by the use of rates per day for casualties and movement.)

If D' equals D_B rather than D_R, then the attacker has reached a boundary and has not gone as far as he could in the time available. The battle-day counter is reset to 1, the time consumed T_c is computed, and T is set to equal the time remaining. Casualties are then assessed on the basis of T_c, and the question is asked, "Is $T = \emptyset$?" The answer to this will be yes only in the special case where $D_B = D_R$. Normally, the program will go back to A1 and assess the action occurring during the remainder of the day. In either case the program eventually gets to point F.

At point F, in preparation for the next day's cycle, the program ensures that T = 1 and that the attacking side is properly recorded. The next function is to examine every combat unit in the sector. Depending on its personnel strength (PS) and combat status (CS) either or both of these characteristics may be changed.

Units with a personnel strength below 68 percent are considered to be ineffective on the battlefield. Between 68 and 79 percent they are effective as defenders only. This is the reason the initial determination of ICEs is made using the effectiveness curves applicable to defenders. If a unit is in Class A, it will always have some effectiveness as a defender even when it is no longer effective as an attacker. In closely matched situations this can lead to force ratios of less than 1 to 1 after the attacker's ICE is recomputed using the effectiveness curves for attacking forces.

Interpretation of the remaining boxes of the flow chart indicates how to exit from the model. The types of assessment for one sector have been discussed. The model now repeats for all sectors in the theater and when this procedure is completed, either a printout of the assessments is called for or another model is assessed, depending on the wishes of the user.

Chapter 2

LOGISTICS MODEL

INTRODUCTION

The manual version of the RAC quick game did not consider the possible degradation in effectiveness of combat units because of lack of supplies. In order that the CQG be more realistic in assessing the outcome of deploying forces and supplies rapidly to meet a given threat, it seems desirable to add a logistics model to the computer simulation. Such a model should simulate the intratheater flow of supplies to units already deployed, the movement of new units to the combat zone, and the building of stockpiles of supplies. A model achieving these objectives would become a vehicle for assessing the effects of enemy interdiction on the flow of supplies and hence on unit combat effectiveness. This chapter describes such a logistics model.

GENERAL DISCUSSION

A basic premise of the model is that resupply of deployed units will take priority over the deployment of new units. This requires an assumption that supplies and equipment earmarked for resupply can be distinguished from the equipment and supplies that constitute a unit's basic load and are needed for initial deployment. Stockpiling of supplies has been given a third-priority assignment.

The model operates independently for each side and in each sector of the theater. The sectors used are the same as those defined in the GCM.

Node Concept

In each sector the network of ground LOCs is represented by a series of single LOCs connecting nodes approximately 1 day's overland journey apart. This spacing is necessary for the model to operate on a daily basis. The location of each node is related to ports, airfields, or rail and road junctions within each sector. Nodes are also linked by air LOCs if air bases are available.

A node may have associated with it either a SAM site, a tactical air base, or both. As far as the operation of the logistics model is concerned, these entities are considered as part of the total demand on a node for resupply purposes.

The node immediately behind the FEBA is responsible for the resupply of the ground-combat units. For the remainder of this chapter it will be referred to as the forward supply point. Figure 5 is a schematic representation of the sector node system.

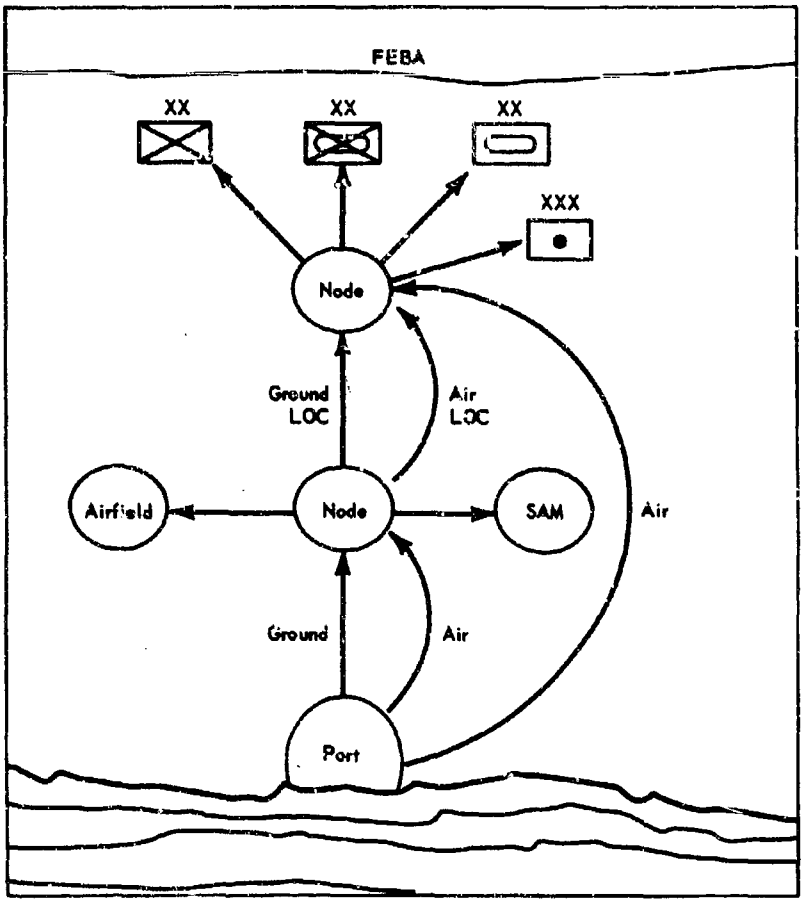

Fig. 5—Schematic Representation of Sector Node System

Node Characteristics

The logistics system, i.e., the ways and means of moving supplies, men, and equipment, is represented by the characteristics of the nodes. A node is characterized by:

(a) Ground capacity. The maximum daily tonnage that can be moved out of the node by means of the ground LOCs and any available helicopter lift. Ground and helicopter capacities have been considered as one, on the assumption that the radius of operation of helicopters is approximately the same as the distance between nodes.

(b) Aircraft capacity. The maximum daily tonnage that can be moved in or out of the node by fixed-wing aircraft.

(c) Required stock level. The requirement to hold a number of days of supply on hand. The size of a day of supply, in tons, increases as the size of the deployed force increases.

(d) Consumption rate. A number representing the tons of supplies at a node that are consumed per day by logistic units. Many nodes in a sector, such as ports and airfields, will be occupied by large logistic units.

A special set of characteristics is used to describe the forward supply point. It takes the same form as the general set, except for output capacity. Within the combat zone the ability of logistic units to deliver supplies, and the inherent capability of combat units to fetch and carry their own supplies is related to the size of the deployed force. Thus the ground, helicopter, and air output capacities of the forward supply point have been combined into a single output that is proportional to the total day of supply of the combat units. Currently, based on RAC's THEATERSPIEL logistic model,[12] every forward supply point is given an output capacity of a maximum of 2 days of supply in 1 day.

Units that are initially deployed in the theater are specified in the input data. New units entering the theater are assigned to various sectors by rules described in the TDM, Chap. 4. They appear in the logistics model as a total tonnage representing the troops, equipment, and basic load available. Supplies entering the theater are described by total tonnage and not by class. They may be allocated to sectors based on the need of deployed combat units or predesignated as supplies for a specific unit.

DETAILED DESCRIPTION OF THE MODEL

The purpose of this section is to present the rules and algorithms that make up the logistics model. The following description is for one side in one sector only, but the assessments are identical for all sectors and for both sides.

Updating the Forward Supply Point

The forward supply point is that node directly behind the FEBA. It is solely responsible for resupply of all the ground-combat units in a sector and has an output capacity conceptually different from the output capacity of the rearward nodes, directly related to the number of combat units to be supported. If supplies are available at the forward supply point, it is presumed that the combat units are always capable of getting up to 2 days of supply in 1 calendar day if necessary. This presumption is justifiable on the grounds that much of the needed manpower and transport capability will come from the supported units themselves.

Between successive operational cycles of the logistics model the FEBA will have moved by an amount assessed in the GCM. A rearward movement of the FEBA may result in its getting behind the current location of the forward supply point. If this is the case, the next most rearward node becomes the supply point. This new forward supply point will have its on-hand supplies made equal to those currently at the new location plus the minimum of either the on-hand supplies or the ground-plus-air output capacity of the old forward supply point.

When the FEBA advances beyond one node, the forward supply point is moved to the location of the uncovered node. Since this new location was

previously in enemy territory, it does not have supplies of its own. Supplies are then transferred from the old forward supply point up to the limit of its output capacity.

For either forward or rearward movement of the forward supply point, incomplete combat units are moved with the supply point to the new location. Holding incomplete units at the forward supply point is a modeling convenience, and although they are not active, it seems unreasonable to lose parts of unassigned units owing to FEBA movement. The movement of troops and their equipment up to the forward supply point is described later.

Enemy Interdiction

After the location of the forward supply point has been checked and moved if necessary, the situation is considered static for the remainder of the logistics assessment. The next step is to take into account the effects of enemy interdiction on LOCs and supplies. The size of losses in ground and air output capacities and in supplies at particular nodes is determined in the tactical-air model, Chap. 3. Nodes are selected for attack on the basis of the range of the attacking aircraft and the size of each node, measured in terms of its on-hand supplies and total output capacity.

Although the logistics model is reducing output capacities owing to interdiction, the recovery from previous losses must also be considered. In the absence of better data it is assumed that a loss in ground output capacity can be recovered completely with 2 day's delay.

Demand for Resupply

At a node there may be three external demands for supplies: the demand for supplies to be sent forward (at the forward supply point this is the demand from the ground-combat units), the demand from SAM sites, and the demand from tactical-air bases. The sum of the three is the total external demand on a given node. Since the model does not recognize LOC restrictions between a supply node and its associated SAM site or tactical-air base, the only time these demands are not met is when total demand on a node exceeds supplies available at the node. When demand exceeds supplies available, supplies are delivered in proportion to the demand.

Ground-Combat-Unit Resupply. A ground-combat unit enters the combat zone, at or in front of the forward supply point, with a quantity of supplies stated in the input data. On a particular day the supplies expended by a unit will vary with unit type, its status (i.e., assigned to combat or withdrawn), strength, and posture. Supply expenditures for full-strength units are defined in the input data. Less-than-full-strength units use supplies in proportion to their personnel strength.

The logic for creating the demand for resupply of a unit is that it should attempt to keep on hand an authorized load, specified as the number of planned days of supply that a unit should carry with it into battle. The planned day of supply is the amount of supplies a unit is considered to consume per day over an extended period of time.

A demand for resupply is calculated for every unit in a sector and summed to provide the total combat-zone demand in that sector. The sum of the

planned day of supply is also calculated so that stockpile requirements can be translated into tons of supplies. Stockpile requirements at various nodes in a sector are stated as the number of planned days of supply that should be held at each node.

Resupply of SAM Sites and Tactical-Air Bases. The positioning of tactical-air bases and SAM sites is described in detail in Chaps. 3 and 4 respectively. They interact with the logistics model insomuch as they consume supplies. Each SAM site and tactical-air base is associated with a particular node that is responsible for providing them with supplies. SAM sites are assumed to demand supplies at a constant rate per battery, based on an assumed level of activity. Demands by tactical-air bases are calculated in a similar manner to those from the ground-combat units, each base having an authorized stock level that it attempts to maintain. Hence the demand for resupply at a tactical-air base is merely the difference between actual on-hand supply levels and the authorized stockpile. The consumption of supplies is a function of the number of sorties flown from the base.

Movement of Supplies, Troops, and Equipment

In this part of the model, supplies are moved through the sector to meet the demands from the ground-combat units, the SAM and tactical-air bases in the sector, and the consumption of supplies by the nodes themselves. Any remaining output capacities are used to move new units (troops, their equipment, and authorized basic load) up to the combat zone and to meet stockpile requirements of specific nodes.

The input of supplies and new units into a sector will be described later. Here it is necessary only to realize that,as a result of prepositioning, movement within the sector, and input from outside the theater, each node in a sector has tons of supplies and tons of new units associated with it. The latter quantity is made of two components: the part of a unit that has to travel over the ground LOCs and the part that can be moved by air. The proportion depends on the unit type and the kind of aircraft that provide the air capacities.

The impetus required to set supplies moving through a sector is provided by the demand from the ground-combat units. Supplies are moved from node to node using logic that is applied to each node in turn, beginning at the forward supply point. The logic of the model is designed so that all supplies and new units will be transported over ground LOCs, if the capacities are large enough, with the use of supplemental air transportation.

The supplies that should be sent forward to the combat units may be restricted by the ground output capacity of the node. If this is the case, and no air resupply is available, the supplies that remain at the node are used, as necessary, to satisfy any deficiencies at the SAM and tactical-air bases.

Since the flow of supplies from node to node is the lifeblood of all ground units, SAM, and tactical-air bases, it is important that every attempt be made to meet the forward demand for supplies. If the supplies leaving a node fall short of the demand, because of a lack of supplies or ground-output-capacity limitations, it may be possible to fly the deficit into the receiving node in fixed-wing aircraft. This can be done if the receiving node has an airfield capable of accepting the deficit and if a node (or nodes) to the rear has sufficient supplies and air output capacity. Attempts to supply the deficit are

made first by the node currently forwarding supplies, then by the first node in the sector (thought to be the node most likely to have both sufficient supplies and air capacity), and then by the second node, and so on.

In keeping with the philosophy that all supplies and new units should, if possible, be moved over the ground LOCs, remaining ground output capacities are used to send new units to a more forward node and then to send supplies to meet stockpile requirements of the forward node.

All the supplies leaving a node by ground means do not necessarily reach the next node. Loss in ground output capacity due to enemy interdiction, i.e., the bombing of roads and railways, may occur when supply convoys are actually on the road. Quantities of supplies lost in this manner are difficult to determine, but in the model it is assumed they are proportional to the fractional loss in capacity. Hence, if FS are the supplies sent forward from a node, then the supplies $\overline{FS}$ reaching the next node are given by:

$$\overline{FS} = FS\left(1 - \frac{\overline{OC}}{OC}\right)$$

where OC is the nominal ground output capacity of the node and $\overline{OC}$ is the loss due to enemy interdiction. Supplies sent forward by air are not subject to losses since the tactical-air model does not consider the interdiction of transport aircraft in flight.

The procedures described in the previous paragraphs are applied in turn to every node in the sector, with some deviations from the rules in assessing the forward supply point. The net result for all nodes behind the forward supply point is a shifting of supplies and new units from one node to the next. Supplies leaving the forward supply point go to consuming units and cannot be supplemented by air delivery. Combat units that have traveled piecemeal through the LOC network stay at the forward supply point until they are complete, then they are assigned to combat.

Finally, in this movement section of the model, any residual airlift capabilities are used first to transport new units to the forward supply point and second to meet any unfulfilled stockpile requirements.

Input of New Units and Supplies

The arrival times of new units and supplies into a theater are scenario dependent,and, as previously mentioned, each unit is described by two weights: that which must be transported over ground LOCs and that which may go by air. In most theaters of operations the arrival points for large units and supply consignments are limited in number, with a resultant limitation on the number of battle sectors that they serve. For this reason the input data must specify the points of entry (port areas or air bases) for the incoming combat units and supplies. The assignment of combat units to battle sectors is then governed by rules in the TDM, Chap. 4. Supplies that have not been predesignated for a specific unit are distributed among the sectors in proportion to the total sector demand.

Degradation of Combat Effectiveness

A division would normally have 2 to 3 days of supply on hand when in combat. Should its consumption exceed its resupply, the logistics model will degrade

the unit's combat effectiveness when the supplies on hand go below a stipulated 2-day level. This reflects the fact that when the general level of supplies is low in a large unit like a division, some of the smaller component units will be short of supplies and will begin rationing. It is felt that a unit's degradation of combat effectiveness (i.e., ICE) is not a linear function of the amount of supplies on hand. Hence the type degradation used in the model is shown in Fig. 6. (This curve is represented in tabular form in the input data.)

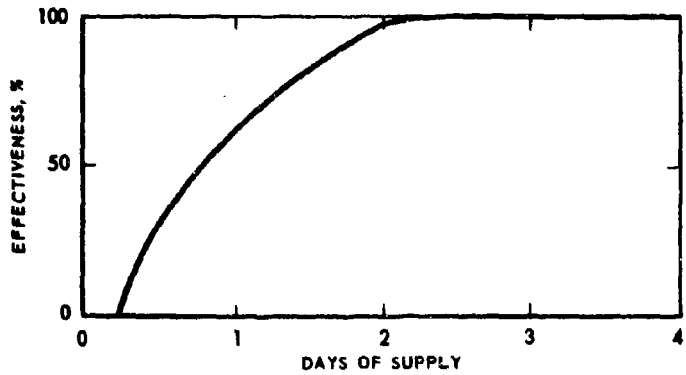

Fig. 6—Degradation of ICE as a Function of Days of Supply On Hand

The equation of the previous curve is given by

$$\text{percentage Eff} = 100\left(\frac{4.5\,N - 1}{8}\right)^{0.6}, \text{ for } 2/9 \leq N \leq 2.0$$

where N is the number of days of supply with the division.

The equation is represented in the computer model by a table of values and may easily be changed if a more acceptable degradation function becomes available.

Assignment of New Units to Combat

New units are transported as tons through the sector until they reach the forward supply point. The model recognizes that a complete unit has reached the forward supply point by checking the total weight of units at the forward supply point against the list of units vs total weight that is compiled when new units enter the sector. When it is adjudged that a complete unit has reached the forward supply point it is assigned to combat.

Chapter 3

TACTICAL-AIR MODEL

INTRODUCTION

The original version of RAC's quick game was strictly an assessment of ground action dealing with combat and combat-support elements. Within the computerized version, it was intended that both air elements and logistics units be simulated to add completeness to the game assessment. This chapter explains in detail the type of assessments performed by the tactical-air model.

GENERAL DISCUSSION

The tactical-air model of CQG is based on the premise that the effects of air operations can be forecast and that weapon systems and tactics can be evaluated on the basis of past experience and analytic comparison. Certain air operations data from WWII, the Korean War, and Vietnam have provided a base from which to measure air-weapons effectiveness in various applications. In this respect the quick-gaming tactical-air model was designed to assess the effects of air attacks on ground-combat elements, opposing aircraft and other specific targets in three general-type missions: air-superiority missions, CAS, and interdiction-type missions. For detailed assessments, air-superiority missions are viewed as the SAM-suppression, air-base-interdiction, and air-defense roles deemed necessary for attaining air superiority.

Daily operation of the tactical-air model is dependent on the TDM (discussed in Chap. 4) wherein an air-control authority (ACA) assigns combat aircraft to each battle sector on the basis of enemy ICE per sector and the overall aircraft availability. (The number of ACAs operating within the theater is a function of the theater, scenario, and game objectives.) From the total aircraft assigned to each sector, the model makes aircraft assignments to air bases within the sector on the basis of air-base and supply availability and to the combat missions on the basis of enemy air power per sector.

After the TDM has allocated combat aircraft to various battle sectors, the tactical-air model assigns the aircraft to air bases within the sector for a home-base location and logistics support. The home-base location is necessary as a basis for evaluating a combat radius of the type aircraft used in the game. (The present tactical-air model provides for one type of aircraft only,

with the ordnance load assumed to be a standard loading for the mission assignment.) The combat radius, an input to the model, determines the maximum depth to which SAM sites, enemy air bases, and supply nodes may be interdicted. All distances are calculated from the node that supplies the home base to the nodes associated with the target elements.

Assignment of aircraft to the five combat missions within each sector is based on the relative strength of opposing air forces per sector. The air doctrine being followed, for both sides, gives primary emphasis to achieving air superiority. As the degree of superiority increases, more and more aircraft are assigned to CAS and interdiction-type missions. The tactical-air model is flexible enough to accept any variations in mission assignments and requires only a change in the input data.

METHODOLOGY

Often in war-game assessments, aircraft missions are degraded by aborts only. An abort factor, however, generally represents average materiel reliability and does not account for variations in the weather, errors in navigation, target acquisition, or other factors that may prevent an aircraft mission from being 100 percent completed. To account for these intangibles the tactical-air model degrades the number of combat aircraft by an overall-reliability factor (ORF). This ORF combines the effect of abort factors with flight-effectiveness factors to give a degraded mission performance. Thus once a sector has been assigned aircraft for a day's operation, the ORF is applied to each sector to determine the number of aircraft actually available for that day's action.

Allowing a maximum of two sorties per day per aircraft, the same factor is obtained if a listing of individual events and their probabilities is considered. Let P equal the probability that a single aircraft is flyable throughout the day, R equal inflight reliability on each of two missions, and FEV equal expected value of flight effectiveness for each of two missions; then the ORF is

$$ORF = 2 \times P \times R^2 \times (FEV)^2$$

which may be considered as representing the expected number of effective sorties per day per aircraft assigned. The above ORF value is an input to the air model and is based on assumed values of the individual events.

Only one type of aircraft is played in the tactical-air model. It can be a designated aircraft such as the F-4C or F-105, or a notional aircraft taken to be available in the theater. The armaments used are assumed to be a standard loading with respect to the mission assignment.

A combat radius is determined for the aircraft used in the game and is entered to the model as input. In a non-SAM environment, flight altitudes toward, over, and returning from a target area will be much higher than in a SAM environment. Hence combat radii may change appreciably for various air-defense environments. The combat radius determines the maximum depth to which SAM sites, air bases, and supply nodes may be interdicted.

There are instances, however, when air bases are forced to move. The rules for movement of air bases are:

(a) An air base will move to a more forward predesignated position if the distance from air base to FEBA is greater than some fixed distance. The distance selected remains constant for each game operation.

(b) An air base will move to a more rearward predesignated position whenever the FEBA recedes to within a fixed distance of the air base. The distance remains constant for each game operation.

Possible air-base positions for each sector are determined and entered into the program as are the maximum number of daily sorties the air base can sustain. This allows the tactical-air model to choose the number of air bases required to handle the assigned sorties per day.

On a daily basis the ACAs assign tactical aircraft to each of the sectors within their area of control. The tactical-air model then assigns these aircraft to air bases within the sector. The number of aircraft N_j the jth air base will receive is limited by one of the following three values: the number of aircraft to be assigned to the sector A_i, the present air-base capacity, or the supply level at the air base to equip and sustain sorties. This minimum function is expressed as

$$N_j = \min\left[A_i, \frac{n_j C_j}{s}, \frac{(OH)_j}{st}\right]; \; j = 1, \ldots, B$$

where A_i = number of aircraft to be assigned to ith sector
n_j = maximum sorties per day from jth air base
C_j = present air-base capacity (percentage) for jth air base
$(OH)_j$ = on-hand supplies of jth air base
B = number of air bases within combat range of FEBA
s = sorties per aircraft per day
t = tons of supplies consumed per sortie

Thus if $N_1 = A_i$, the most forward air base ($j = 1$) receives all the aircraft assigned to this sector for the day's actions. If $N_1 < A_i$, then $R = A_i - N_1$ is assigned to the next most forward air base ($j = 2$). If there are still A_i aircraft to be assigned, the air base ($j = 3$) is then made active for this day, and so forth. From the calculations shown in Chap. 4, we know there is adequate capability in the ith sector to receive all A_i aircraft allocated for this day.

Assignment of aircraft to particular missions within each sector has been made a function of the relative strength of air forces per sector. The tactical-air doctrine being followed places primary emphasis on achieving air superiority. As the degree of superiority increases, more and more aircraft are assigned to CAS and interdiction missions. The selection of aircraft per mission is made from mission curves of the type shown in Fig. 7. Any set of similar curves may be employed in different runs of the simulation. Other tactical-air doctrines may require that a different set of curves be made available to both the Red and Blue forces.

It is also possible that different tactical postures warrant other air-mission assignments. For example, the Blue defense force, if it has air superiority, may wish to assign a high percentage of the aircraft on CAS missions; however, if the same force is in a stalemate situation, a high percentage of interdiction missions may be of tactical importance. In these situations the

tactical-air model is flexible enough to accept all variations in mission assignment, provided that they are entered before each computer run. For most theater scenarios, two sets of mission-assignment curves, one for each side, would be used.

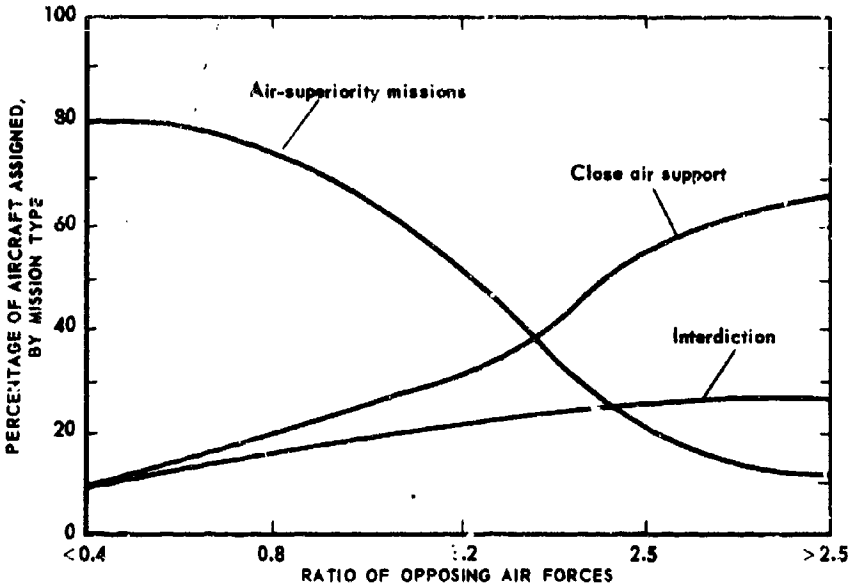

Fig. 7—Sample Blue Mission-Assignment Curves

DETAILED ASSESSMENTS

This section of the tactical-air model presents the logic surrounding the model structure and the necessary formulas for making model assessments. The convention adopted in the following notation of air-model terms is that unbarred symbols refer to the friendly force operations and the barred symbols to the enemy operations. Dotted symbols refer to the attrition of various items assessed in the model. Appendix A contains a generalized flow chart of the tactical-air model. Annex A1 is a glossary of terms used in the air-model assessments. Model data necessary for tactical-air assessments are presented in Annex A2.

Air-Defense Operations

Air-defense operations all utilize measures designed to destroy or reduce the effectiveness of attack aircraft, including air-defense fighters, SAMs, and ADA organic to ground-combat units.

Effectiveness of Air-Defense Fighters. The tactical-air model assumes that air-to-air battles occur concurrently with each mission assessment. Since the aircraft played in the model are of a composite type, it is assumed that the escort aircraft that generally accompany other mission aircraft are now part of the total number of aircraft engaged. Thus fighter-escort and air-defense aircraft will be attrited through similar assessments in air-to-air battles on a sector-by-sector basis.

Total number of attacking aircraft killed ($\dot{A}$) by air-defense aircraft (i.e., interceptors) in a given sector is

$$\dot{A} = \min (\bar{P}_1 \bar{A}_3, a A)$$

where A_3 = number of aircraft allocated to the air-defense role by defender's mission curves

P_1 = kill probability of interceptors vs attack aircraft

a = acceptable attrition to attacking aircraft if mission may be aborted; if mission is nonabort type, the value should be 1.0

A = number of attacking aircraft

Total number of interceptors killed (A_3) by the attacking aircraft in a given sector is

$$\dot{A}_3 = \min [\bar{P}_5 \min (\bar{A}, A_3), b A_3]$$

where P_5 = kill probability of attack aircraft vs interceptor

b = acceptable attrition to air-defense aircraft before defense mission is aborted

A = number of attacking aircraft

A_3 = number of interceptors

The number of attack aircraft ($\dot{A}$) lost to interceptors is subtracted from the total number of attack aircraft (A). The remaining aircraft are then reapportioned to combat missions using the initial percentages indicated by the mission-assignment curves. This new distribution is used to determine further effects of attack aircraft on their various missions.

Surface-to-Air-Missile Effectiveness. This portion of the air-defense routine determines the number of aircraft lost to SAMs as each sector is penetrated by the enemy attack aircraft. The new distribution of attack aircraft is used to determine the number of aircraft per mission.

In the SAM assessment there are two single-salvo-kill probabilities (SSKPs) employed. One is applied against aircraft whose mission it is to attempt SAM suppression at the site, and the other is a lower value applied to aircraft on other missions. The aircraft in the second category are CAS aircraft when in range of the SAMs and aircraft that must fly by this SAM site to complete a mission at greater depth. It was considered that fly-by aircraft would be aware of certain SAM sites and could take evasive action to get through, although not entirely unharmed. CAS aircraft generally operating on the deck would likewise receive a lowered assessment from SAMs but might become more vulnerable to ADA in the area.

Within each battle sector there may be more than one concentration of SAM-fire units in depth from FEBA. Depending on the theater, there may be more than one type of SAM unit deployed. Since each SAM concentration is

characterized in the model by the number of fire units available, SAM effectiveness against attacking aircraft can be determined.

As explained later in the counter-air-defense operations, aircraft assigned to SAM-suppression missions will be in proportion to the number of SAM fire units at each site. A fire unit as defined here consists of the detection and guidance radar, the fire-control system, and those batteries or launchers served by the fire-control system.

The total number of attacking aircraft lost ($\dot{A}_j$) to SAM fire at a given site will be:

$$\dot{A}_j = \min(\bar{F}_j \bar{P}_{2_j}, c_j A_j), \quad j = 1, 2, 4, 5.$$

Where A_j = number of attacking aircraft on j-type mission
F_j = number of fire units at the site
P_{2_j} = SSKP of SAM vs aircraft on j-type mission
c_j = maximum attrition to aircraft on j-type mission as one SAM site is penetrated

The Close Air Support Board in August 1963 defined targets of maximum interest for close support of ground operations 75 km from FEBA.[8] Twenty-five percent of the targets indicated were less than 12 km from FEBA, and 75 percent of the targets were between 12 and 75 km of FEBA. In these cases only the first SAM site back from FEBA would be within range to be effective against CAS aircraft. The remaining attack aircraft, depending on their type of mission and combat radius, may come under attack from other SAM elements.

The number of attacking aircraft lost to SAM fire is a function of the SSKP for the type of SAM system deployed and of that system's firing doctrine, i.e., one, two, or more missiles per salvo. In an actual engagement SAM units would undoubtedly find the attacking aircraft at differing altitudes. But the present model assumes that aircraft penetrate at combat altitudes that are least costly to the air unit as a whole.

Air-Defense Weapon Effectiveness. The number of attack aircraft lost to ADA organic to the ground forces in each sector is assessed as an overall attrition constant per sector. The attrition constant d is a weighted average of the effectiveness of ADA weapons organic to combat divisions and supporting elements within each sector. Hence as aircraft penetrate a given sector, the attrition constant for that sector is assessed against the aircraft. Specific values for determining an attrition constant may be found in the THEATERSPIEL Manual.[13] The assessment form for attack aircraft lost to ADA weapons is

$$\dot{A}_j = \bar{d} A_j$$

where d equals attrition constant to attack aircraft from ADA weapons and A_j equals number of attack aircraft on j-type mission.

The ADA weapon effectiveness is degraded as CAS effects and other battle actions are brought to bear on the ground forces. Once the attrition constant is determined for a combat division, the ratio of ADA effectiveness to division ICE will remain constant. Then as the division ICE is reduced by battle effects, the corresponding ADA attrition constant is similarly reduced.

Counter-Air-Defense Operations

(U) Counter-air-defense operations (CAO) are designed to encompass SAM-suppression and air-base-interdiction missions. The detailed effects assessed are air strikes against ground-based air-defense weapons and the loss of enemy air capability by means of interdiction of air bases and supporting air facilities.

(U) The number of aircraft assigned to each type of mission within the CAO is determined in the following manner. Note that an implicit assumption is made that good intelligence on the location of SAM sites and air bases is available.

(a) Determine if an enemy air base is within combat range of the home air base. If none exist, all CAO aircraft are assigned to interdict SAM sites within range. If no SAM sites are within range, the CAO aircraft are then reassigned to air-defense, CAS, and interdiction-type missions equally.

(b) If active enemy air bases and SAM sites are within range of the home air base, 50 percent of the CAO aircraft attack the air bases and 50 percent attack SAM sites. (These are arbitrary percentages and may be changed at any time.)

(c) The number of aircraft assigned to each SAM site is in proportion to the number of fire units at each site.

(d) The assignment of aircraft to attack enemy air bases is made in proportion to the number of enemy aircraft assigned to and hence the quantity of supplies available at the air base.

(U) Air-Base Interdiction. Active air bases within range of the opposing air forces are vulnerable to interdiction. The interdiction assessment is made against the air-base facilities, on-hand supplies, and parked aircraft. The methods of assessment are discussed in the following three sections:

(U) (a) Air-base capability. The capability of an air base to sustain a given number of sorties per day (depending on available runways, parking areas, and other supporting facilities) is degraded by means of this assessment. The degradation to a given air base is assumed to be represented by[14]

$$\dot{C} = C\left[1 - \exp\left(\frac{-k_1 \bar{q} A_5}{C}\right)\right]$$

where $\dot{C}$ = percentage degradation of air-base capacity
C = present air-base capacity as percentage of maximum
A_5 = number of aircraft that attack a given air base
$\bar{q}$ = percentage of A_5 aircraft that attack air-base facilities
k_1 = attrition constant to air-base capacity

(C) The attrition constant to air-base capacity is based on data from the Defense Intelligence Agency (DIA) Physical Vulnerability Handbook and listed as tabular data in an AWC "Analysis Seminar Control Manual."[15] For example, 10 tons of ordnance delivered is expected to destroy 6 percent of air-base facility, and 20 tons of ordnance destroys 14 percent of the facilities. Assuming Blue aircraft can deliver approximately 4.5 tons of ordnance per sortie we note

$$\dot{C} = C\left[1 - \exp\left(\frac{-k_1 A_5}{C}\right)\right]$$

then

$$1 - \frac{\dot{C}}{C} = \exp\left(\frac{-k_1 A_5}{C}\right)$$

and

$$\ln\left(1 - \frac{\dot{C}}{C}\right) = \frac{-k_1 A_5}{C}$$

finally

$$k_1 = -\frac{C}{A_5} \ln\left(1 - \frac{\dot{C}}{C}\right)$$

With $\dot{C}$ = 6 percent, 16 tons equate to 2.25 aircraft; then k_1 = 2.7 percent per aircraft

$\dot{C}$ = 14 percent, 20 tons equate to 4.45 aircraft; then k_1 = 3.3 percent per aircraft

Therefore

average k_1 value = 3.0 percent for each Blue aircraft.

(U) (b) Destruction of on-hand supplies. The tons of on-hand supplies lost by air-base interdiction is equal to the percentage of air-base capacity lost. That is;

$$\dot{OH} = (\dot{C}/C) \times OH$$

(U) (c) Destruction of parked aircraft. A damage assessment to parked aircraft at any air base assumes that the number of aircraft on the ground at the time of the attack is known. Since this would probably be a wild guess on anyone's part, the approach used here is to make the fraction of aircraft unable to scramble a function of the ORF per aircraft. Thus the number of aircraft on the ground at any air base will be at least those that are inoperable on a given day. If ORF is the overall reliability factor for aircraft per sector, then (1 − ORF) is the fraction of aircraft assumed unable to scramble when attacked. This value, very arbitrary in itself, is then applied to the number of aircraft previously assigned to a given air base. The losses would be

$$\dot{A}_a = \min\left[\bar{P}_4 \cdot \bar{h}\, \bar{A}_5,\ (1 - ORF)\, A_a\right]$$

where P_4 = probability of killing a parked aircraft on one bombing pass
h = percentage of A_5 aircraft that attack parked aircraft
A_5 = number of aircraft attacking this air base
A_a = number of aircraft allocated to this air base for mission assignments

(U) SAM Suppression. Within each battle sector the model recognizes that SAM capability may be deployed at various depths from FEBA. This deployment or assignment of SAMs to various battle areas is discussed in Chap. 4. The discussion of CAO operations indicated the method of assignment of aircraft to attack each SAM site.

(U) Once the number of aircraft attacking a given SAM site is known, the SAM losses may be computed. Since the A_1 aircraft are assigned to SAM sites in ratio to the strength of fire units at each site, and aircraft attacking rearward

SAM units come under fire from forward SAMs but with a lowered value of kill, the form of the loss assessment may then be written as

$$\dot{F} = \min(\bar{P}_3 \cdot \bar{A}_1, e\,F)$$

where $\dot{F}$ = the number of SAM fire units destroyed
P_3 = probability of one attack aircraft destroying one fire unit
A_1 = number of A_1 aircraft attacking this SAM unit
e = attrition to fire units from attack aircraft = 1.0
F = number of fire units at this SAM site

CAS Operations

(U) After the mission-assignment curves determine the number of aircraft per sector to go on CAS missions, this portion of the model determines the incremental ICE that is added to each sector to account for close-air effects.

(U) However the tactical-air model plays either one type of aircraft or a composite of all types of aircraft available in the theater. For application to this portion of the model an FPS is determined based on the type and amount of armaments carried on one sortie in a typical CAS mission.

(C) The Close Air Support Board[8] indicated that an effective munition loading for CAS missions would be six pods of cluster bomblet unit (CBU) munitions for air alert to nine pods of CBU munitions for ground alert. If other ordnance is used, the Board indicated that in the period 1965–1970, CAS aircraft would average 6250 lb of ordnance. (Red aircraft are capable of delivering approximately one-third this amount of ordnance in a CAS role.)

(C) Computation of ICE values for any weapon used in CQG assumes that target types and target sizes are similar for all area-fire weapons. The resultant ICE value is then proportional to the product of the lethal area of the munition and the number of munitions assumed to be fired or delivered in a stated period of time—in this case 1 battle day. The ICE values for Blue and Red CAS sorties are .0036 and .0012, respectively. The Blue ICE value was computed assuming an average of 7.5 pods of CBU munitions delivered on a typical CAS mission. These ICE values, when multiplied by the total number of aircraft assigned to CAS missions, will yield the ICE that is to be added to the sector ICE for the day's action. (The ICE computation is made for each sortie per aircraft assessed each day.) The total ICE for CAS is computed on a daily basis to account for loss of aircraft or change in CAS tactics.

Assessment of Interdiction Operations

(U) The logistics model of CQG recognizes LOCs existing in each sector as one-dimensional supply routes. The supply nodes, which simulate the aggregation of all supply points existing within fixed distances from FEBA, are predetermined for each sector. Thus the logic for air interdiction of LOCs and damage to supply nodes is presented in this section of the air model as interdiction operations.

(U) Interdiction of supply lines and loss of supplies is generally most critically felt in the forward battle areas. Resupply into these forward areas is of the greatest importance since supply losses tend to create a loss of combat effectiveness within a day or two. However, aircraft are not assigned to interdict

the most forward node only since a point of diminishing returns exists when too many aircraft attack one target. Therefore the tactical-air model interdiction assessment has aircraft attacking supply nodes in depth from FEBA out to the combat range of the aircraft. The aircraft are assigned to each node in proportion to the size of the node as determined by its output capacity, its on-hand supplies, and its air-resupply capability.

(U) If $T_1, T_2, \ldots, T_n$ are the tons of supplies, output capacities, and air resupply that characterize supply nodes 1, 2, . . . , n back from FEBA respectively, then the fraction of the total aircraft assigned to any one node within range is

$$N_i = \frac{T_i}{T}$$

where $T = T_1 + T_2 + \ldots + T_n$, $(i = 1, \ldots, n)$
An assumption made here is that the same aircraft will not attack more than one supply node on any one mission.

(U) LOC Interdiction. The LOC capacity of each supply node is a function of the capacity of the rail and road network of the lines of supply and the logistics effort required to keep the unit at maximum effectiveness. The present output capacity is assumed to drop if either the supply lines are interdicted or the logistics unit suffers a reduction in strength. With the present output capacity taken as an index to the vulnerability of the LOC, an exponential decay assessment is assumed acceptable to express damage to LOCs and reduction of logistic support.

(U) Assuming that, of the total aircraft attacking a given node, t percent attack the LOCs and supply convoys and the remaining $(1-t)$ percent attack the on-hand supplies and the air resupply capability (if any) at the node, the reduction in output capacity is then

$$\dot{OC} = OC\left[1 - \exp\left(\frac{-k_2\, t\, A_2}{OC}\right)\right]$$

where OC = present output capacity of this node, tons
k_2 = attrition constant to output capacity
A_2 = number of interdiction aircraft attacking this node
t = percentage of A_2 aircraft attacking output capacity

(C) The attrition constants used in all interdiction assessments are based on data in the AWC "Analysis Seminar Control Manual."[15] For example, k_2 for Blue aircraft is derived from a tabulation showing that an interdiction raid of 22 aircraft (100 tons delivered) would be able to reduce a 50-mile length of LOC in heavy terrain by an average of 15 percent. (45-aircraft raid, 200 tons delivered, creates an average of 21 percent reduction.)

(C) To compute the value of k_2 for Blue aircraft, we note that

$$k_2 = -\frac{OC}{A}\ln\left(1 - \frac{\dot{OC}}{OC}\right)$$

$$= \frac{-3700}{22}\ln(1 - 0.15) = 27 \text{ tons per aircraft}$$

where A represents the number of aircraft considered in the evaluation and OC = 3700 tons is the average output capacity of all nodes simulated in the

Southeast Asia theater scenario. (For Red aircraft with approximately 1-ton ordnance, the k_2 value is 6 tons of OC destroyed per aircraft.

(U) The tons of supplies destroyed as a result of LOC interdiction is assessed as a percentage of supplies forwarded by ground means from a given node and is equal to the percentage of reduced output capacity. This assessment, although generated in the air model, is finally applied in the logistics model after supplies have been sent forward to the next node. The loss of supplies forwarded by ground means $\dot{FS}(g)$ is

$$\dot{FS}(g) = \frac{\dot{OC}}{OC} \times FS(g)$$

(U) Air-Resupply and On-Hand-Supply Interdiction. Two other characteristics of supply points are recognized as vulnerable to air interdiction. These are the organic air-resupply capability available to some supply nodes and the stored supplies at the node.

(U) The interdiction to air-resupply capability is in actual fact the loss of parked transport aircraft at the supply complex, as well as a loss in airfield capability to handle the transports. The degradation of the air resupply, if present at a given node, is similar to the exponential decay assessment used previously but with a different attrition constant. The loss of air-resupply capability ($\dot{AC}$) is

$$\dot{AC} = AC\left[1 - \exp\left(\frac{-k_4 r A_2}{AC}\right)\right]$$

where AC = total air-resupply capability of present node
k_4 = attrition constant for air-resupply capability
A_2 = number of aircraft interdicting this node
r = percentage of A_2 aircraft attacking air resupply

Note: If a given node has no air-resupply capability, the r percent aircraft are then assigned to interdict on-hand supplies.

(C) The k_4 attrition constant is based on AWC data[15] stating that 20 tons of ordnance delivered on an air base damages 14 percent of the facilities or 47 percent of the parked aircraft. Assuming that interdiction aircraft will attack both transport aircraft and other transport facilities in equal measure, the average loss is about 30 percent. Since the average resupply capability of all supply nodes in the theater that have transport facilities is nearly 900 tons/day, the k_4 value is determined in the same manner as the other k's. That is,

$$k_4 = \frac{-900}{4.5} \ln (1 - 0.3) = -200 (-0.36) = 72 \text{ tons/aircraft}$$

(C) The loss of on-hand supplies from an interdiction mission is also assessed by the exponential-decay expression. The attrition constant k_3 is based on "destruction of supplies by conventional bombing" data in the AWC Manual.[15] Data presented indicated that 25 tons of ordnance delivered damaged 12 percent of supplies in a typical storage area. FM101-10,[5] para 5.66, indicates the area used for supply density in this model, resulting in 2500 tons per target area. Thus k_3 equals

$$k_3 = \frac{-2500}{5.5} \ln (1 - 0.12) = -455 (-0.13) = 59 \text{ tons/aircraft}$$

Using this attrition constant for on-hand supplies, the loss of on-hand supplies at a given node is determined by

$$\dot{OH} = OH\left[1 - \exp\left(\frac{-\bar{k}_3\, \bar{s}\, A_2}{OH}\right)\right]$$

where OH = tons of supplies on hand at this node
k_3 = attrition constant for on-hand supplies
A_2 = number of aircraft interdicting this node
s = percentage of A_2 aircraft attacking on-hand supplies

Summation of Losses and Recovery

An obvious step that must be taken after detailed assessments are made is the summation of losses. All categories of losses such as aircraft, SAM-fire units, supplies at air bases and supply nodes, LOC throughput capacities, etc., are subtracted from the current strengths of the various elements concerned.

In particular the aircraft losses are extended in one additional dimension. The logic expressed in the detailed assessments represents flights into and through target areas. Return flights are not being assessed in the same detail since no particular mission is now apparent. It is assumed that all aircraft will take the maximum evasive tactics possible to get home safely. Therefore a loss, assessed as a percentage of total loss on the incoming leg, will be assessed on the return leg of the mission. The value used at present is 0.2 percent of incoming losses; this value, however, is certainly arbitrary.

If more than one sortie per day per aircraft is planned for the simulation, losses on the first sortie are subtracted from total aircraft strength. The remaining aircraft are then reassigned to various missions as indicated by mission curves. Detailed assessments are again computed with losses subsequently totaled as before.

After one cycle of the tactical-air model has operated, recovery and/or replacement of items is entered into the model. Aircraft and SAM-fire units have a stated replacement rate, whereas the air-base capability is recovered at a fixed rate of 8 percent/day. (See Annex A2.)

Chapter 4

TACTICAL-DECISION MODEL

GENERAL

The TDM was designed for use within CQG using simple rules to allocate resources of men and materiel within a theater with respect to need and assignment capability. Specifically the model is designed to allocate tactical aircraft on a daily basis to each sector for both sides, to determine the sectors in which follow-on combat units could best be deployed, and to determine the distribution of SAM units as they enter the theater. The various allocation routines simulated in the TDM are discussed briefly in the following paragraphs.

The allocation of tactical aircraft to each battle sector on a daily basis for each side is dependent on the type of ground action in the sector, the strength of the ground forces involved, aircraft availability, and the provision that the defending nation may indicate various strategic phase lines that, if penetrated, are of major concern and must be dealt with at once.

The selection of battle sectors to which newly arrived combat units are assigned is based on the aggressor's rate of advance or cumulative distance advanced toward some strategic objective or strategic phase line and on the ability of the LOCs and logistic system to handle additional units. The basic philosophy being followed is that an attacker will attempt to advance to an objective as quickly as possible without losing ground already captured and the defender will strengthen areas in an attempt to halt the attackers' advance.

The allocation of SAM units to battle sectors following their planned arrival time into the theater creates a buildup of SAM defenses within each sector. This buildup follows the basic doctrine of deployment for the type of SAM units involved and concerns itself with unit positioning and unit separation.

The allocation schemes developed for assigning combat units and SAM units to sectors (and internal nodes) may be overridden by a sector (and node) assignment specified in the input data. An input of this type allows the tactical-decision routine to be bypassed only for the entries specified.

TACTICAL-DECISION-MODEL INTERACTION WITH OTHER QUICK-GAME MODELS

The resource-allocation routines within the TDM create interactions with the other game submodels. The logic of the various routines and the points of interaction are discussed in the following sections.

Tactical-Air Model

For control and daily allocation of combat aircraft the TDM simulates an ACA that determines from the number of aircraft under its control the percentage of aircraft to be allocated to each sector, based on the tactical situation within the sector. For a theater operation an ACA may be considered equivalent to the tactical-air-force commander and his staff. If the theater is large enough, more than one air force is required; hence more than one ACA could be simulated. If at any time during a play of the simulation all sectors within the purview of one ACA are overrun, the aircraft remaining under the control of that ACA will be assigned to the remaining ACAs.

Since the ACA generally operates at a theater-command level (it may operate at a lower staff level if the situation warrants it) and serves more than one sector, the number and identification of the sectors under consideration must be included as part of the input data. The input also specifies the number of aircraft initially with each ACA and the planned arrival times of other aircraft into the theater.

Allocation of Combat Aircraft. The allocation of combat aircraft to each battle sector is a function of the tactical situation existing in the sector. Three tactical situations are possible: (a) Red forces advancing, (b) Red forces retreating, and (c) forces stalemated, i.e., no FEBA movement. These situations are assumed to be assignment priorities 1, 2, and 3 in the order a, b, c for the Red force and a, c, b for the Blue force. Thus each day the ACA for each side assigns all the aircraft available to the highest priority situation existing. If that situation exists in more than one sector, the aircraft are assigned in ratio to the ICE of the opposing force in the sectors involved. Thus any desired change in the logic or priority assignment of aircraft may be made by reordering the above situations. This reordering possibility lends itself to sensitivity studies on tactics of aircraft assignment.

One exception to the above allocation scheme occurs when the defenders' strategic phase line is penetrated. These sectors become of prime importance once one or more of them is penetrated and all the defenders' aircraft are assigned in ratio to the ICE of the units making the penetration. Once the advancing units are halted, the defenders' aircraft are assigned to sectors according to the usual allocation scheme. When the phase line has been penetrated in all sectors, an alternate phase line is brought into being and the aircraft assignments follow as before.

The allocation of aircraft to each sector by the ACA is not done entirely on the basis of the ICE of the units involved. Certainly the ICE permits an initial designation of aircraft, but an additional step in sector selection is warranted. This step is to determine the maximum number of aircraft that each sector can accommodate, based on the capacities of air bases within range of FEBA and the supplies available at the air bases to equip and sustain combat sorties.

As described in Chap. 3, the tactical-air model recognizes a maximum capability of n sorties/day for each air base. Assuming s sorties/day per aircraft and a consumption rate of t tons of supplies per tactical sortie, each sector can accommodate the following number of aircraft:

$$N_i = \min\left(\sum_{j=1}^{B} \frac{n_j C_j}{s}, \sum_{j=1}^{B} \frac{(OH)_j}{st}\right), \quad i = 1, \ldots, m$$

where m = the number of sectors controlled by the ACA under consideration

B = number of sector air bases within combat range of FEBA, most forward air base being $j = 1$

C = the present air-base capacity (percentage), i.e., the present level of operation of the air base

n = maximum number of combat sorties per day from the jth air base when at 100 percent level of operation

OH = tons of supplies on hand at the jth air base

Thus if A_i is the number of aircraft the ACA initially wanted to assign to sector i based on the ICE ratio, one of the following situations will exist:

(a) if $N_i < A_i$, then $R_i = A_i - N_i$ is the number of aircraft available for assignment to other sectors,

(b) if $N_i > A_i$, then sector i is capable of receiving more aircraft than originally planned, and

(c) if $N < A$ for all sectors under the purview of one ACA, then $R = A - N$ is the number of aircraft not assigned by the ACA for this day's action.

Assignment of Surface-to-Air Missiles Units. The assignment of SAM units to battle sectors, if not spelled out by the scenario, is determined by the TDM following their planned arrival time into the theater. The buildup of SAM defenses will follow the basic doctrine of deployment for the type of SAM units involved which states, for short-range low-altitude SAMs:[16]

> SAM units should be deployed to accomplish early destruction of low-flying aircraft. Some units should be positioned behind those deployed forward to add depth to the defense and provide flexibility and continuity of fire. Mutual support is achieved by fire unit separation less than eight-tenths times effective missile range. SAM units are employed no closer than 10 km of FEBA.

SAM units, generally in battery-sized units, will be attached for resupply purposes to the most forward supply node of each sector first. The follow-on batteries of SAMs also will be assigned to this forward node until the degree of mutual support desired (i.e., spacing of batteries) is achieved, at which time SAM batteries will be assigned to the next rearward node. This allows for defense in depth as called for by the deployment doctrine. It is possible, however, to override the TDM and, by appropriate input, designate the sector and node that will receive the SAM units as they arrive in the theater.

Movement of SAM sites after they have been assigned to various sectors is handled by the following rules:

(a) As the FEBA advances and a SAM site is being overrun, the fire units available at the overrun site become available to the next rearward node.

(b) As the FEBA moves forward, new supply points are uncovered at stated intervals and designated as forward supply points. The SAM-fire units located at each node are deployed forward one node for each new node uncovered.

(c) The logic of step b changes when the most rearward node in the sector is the forward supply node (i.e., there is only one supply node in the sector). If the FEBA now moves forward and the second node becomes the forward node, only one-half the SAM-fire units and on-hand supplies appear at the second node. As the FEBA continues to move forward, the fire units at each node now move forward one node for each new node uncovered.

Ground-Combat Model

The assignment of new combat units to either force within the theater creates additional units for the GCM to control and evaluate on a daily basis. Each new unit is assigned to a battle sector by simple assignment rules. Considering the Red forces to be aggressors and hence conceptual attackers and the Blue forces as conceptual defenders, the assignment rules are as follows:

The Conceptual Defender. The assignment of new units to the defending forces, if not directed by the scenario, proceeds by the following rules:

(a) Among the sectors operating from a port complex or central staging area, determine the sector where the attacking force can reach some predesignated defensive position within a minimum time. The defensive position may be a strategic phase line or the port area itself. The times involved are determined by the distance to the defensive position and the attacker's present rate of advance as a function of existing posture. The sector thus selected receives the new unit. This unit then travels through the sector LOC-node system and is termed active when it is moved out from the forward-supply node.

(b) If the aggressor is not attacking in any battle sectors (i.e., the defending forces have been able to achieve stalemate or are counterattacking in all sectors) the new unit is assigned to that sector where the FEBA is a minimum distance from the most forward unpenetrated strategic phase line.

The Conceptual Attacker. The assignment of attacking units to the various sectors, if not spelled out by the scenario, proceeds as follows:

(a) The new unit is assigned to that sector where the present FEBA is a minimum time from the stated strategic objective. This objective is generally the capture of key logistics or communications centers within each sector. Time is determined by distance to objective and present rate of advance within each sector.

(b) If stalemate exists in all sectors, the new unit is assigned to that sector where the FEBA is a minimum distance from the stated objective.

(c) If stalemate exists in some sectors (i.e., there is no FEBA advance) and the defense is counterattacking in other sectors, the new unit is assigned to that sector where the present FEBA is a minimum distance from the stated objective.

It is clearly recognized, however, that instances may well occur where an additional unit assigned to a sector will overburden the logistics capability of the sector. Therefore before the new unit is assigned to a sector, the ability of that sector to resupply existing combat units, to transport replacement items and supplies to air bases and SAM sites, and to deploy a new unit is carefully evaluated. If in the total evaluation the new unit is judged not able to reach the forward node before a fixed number of days has elapsed, the unit is then directed to the sector with the next greatest need. (The number of days assumed for the test play was taken to be equal to twice the number of nodes in the sector. This number is arbitrary and can be changed at any time.) A check on the next sector's logistics capability is also made. If no sector meets the stated qualifications, the new unit will be assigned to the sector that initially was judged to have the greatest need for additional units, regardless of its logistics capability.

THIS REPORT HAS BEEN REVIEWED
AND CLEARED FOR PUBLIC RELEASE
UNDER DOD DIRECTIVE 5230.9 AND
NO RESTRICTIONS ARE IMPOSED UPON
ITS USE AND DISCLOSURE.

DISTRIBUTION STATEMENT A

APPROVED FOR PUBLIC RELEASE;
DISTRIBUTION UNLIMITED.

Appendix A

MODEL FLOW CHARTS, NOTATIONS USED, AND SAMPLE MODEL DATA

Flow Charts 55

Notations Used 59

Tactical-Air-Model Data Samples 60

Figures

A1. Flow Chart of Ground-Combat Model, 1966 55
A2. Flow Chart of Logistics Model 56
A3. Flow Chart of Tactical-Air Model 57
A4. Flow Chart of Tactical-Decision Model 58

FLOW CHARTS

This appendix contains the detailed flow charts of the models described in Chaps. 1 to 4. In addition a list of notations used and data samples are presented to serve as a guide through the tactical-air-model flow chart. Some of the data entries are scenario dependent, others are not.

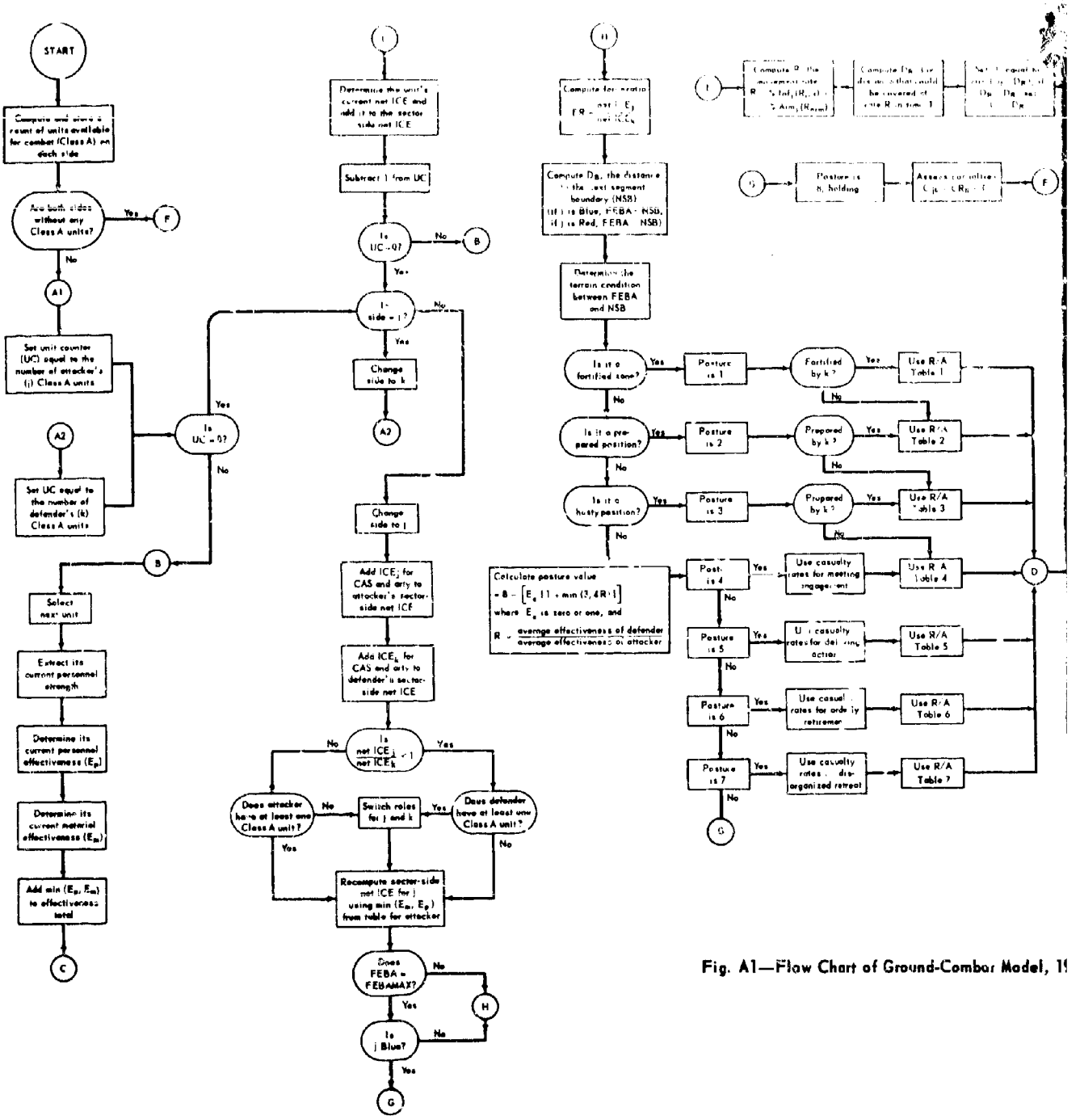

Fig. A1—Flow Chart of Ground-Combat Model, 19

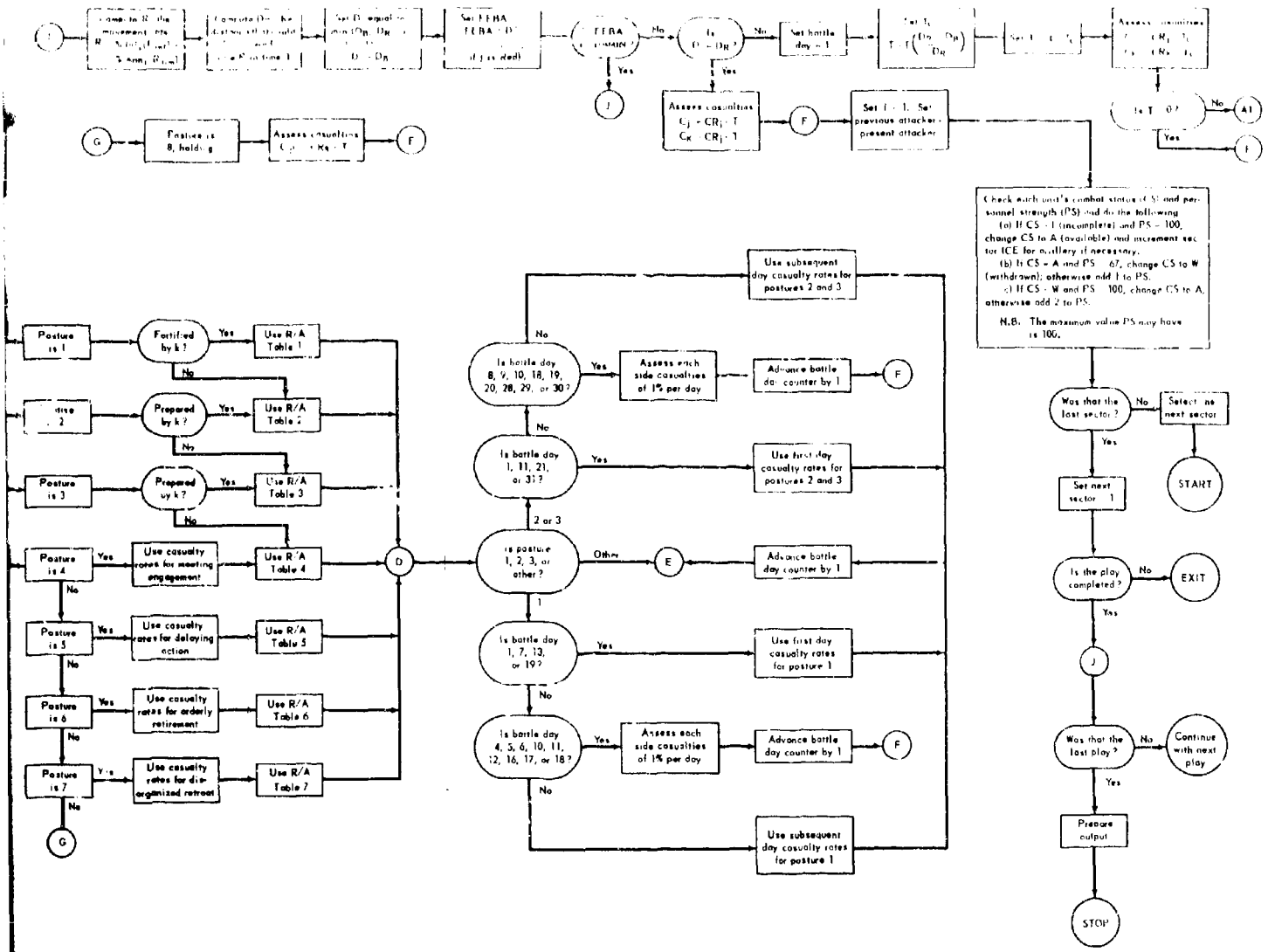

Fig. A1—Flow Chart of Ground-Combat Model, 1966

1

2

Boxes	Operation	Boxes	Operation
1–3	Update the forward supply point.	32–39	Use remaining ground capacities to move from one node to the next new units and use supplies to meet stockpile requirements.
4–5	Assess effects of node interdiction and node internal consumption.		
6	Creates resupply demand of combat units.	42–53	Use remaining air capacities to move new units as far forward as possible and use supplies to meet stockpile requirements.
7–31 (excluding 14–18)	Simulate movement by ground and air of supplies from one node to the next to meet the demands of all ground units, SAM sites, tactical-air bases, and nodes themselves.	54–55	Check arrival of new units at the forward supply point.
14–18	Simulate the distribution of supplies from the forward supply point to the ground units.	56–57	Input new units and supplies to the sector.

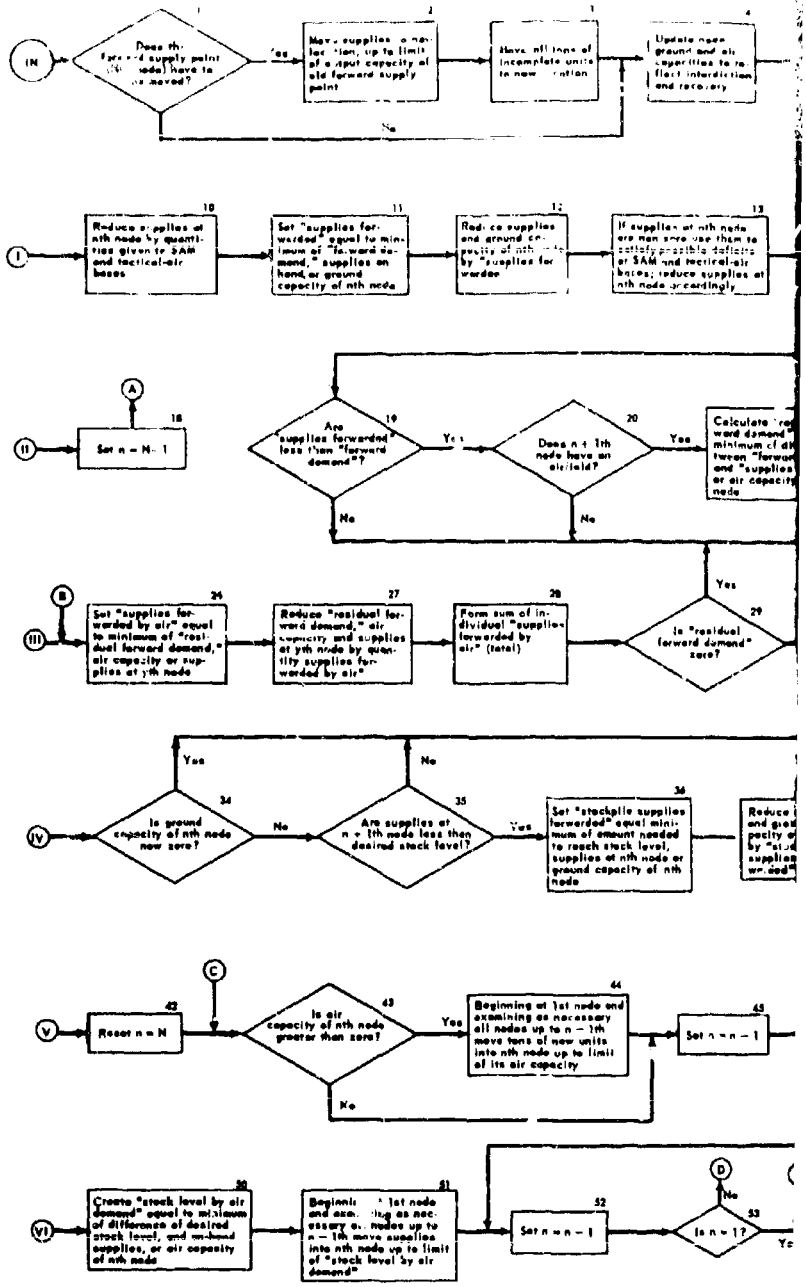

Fig. A2—F

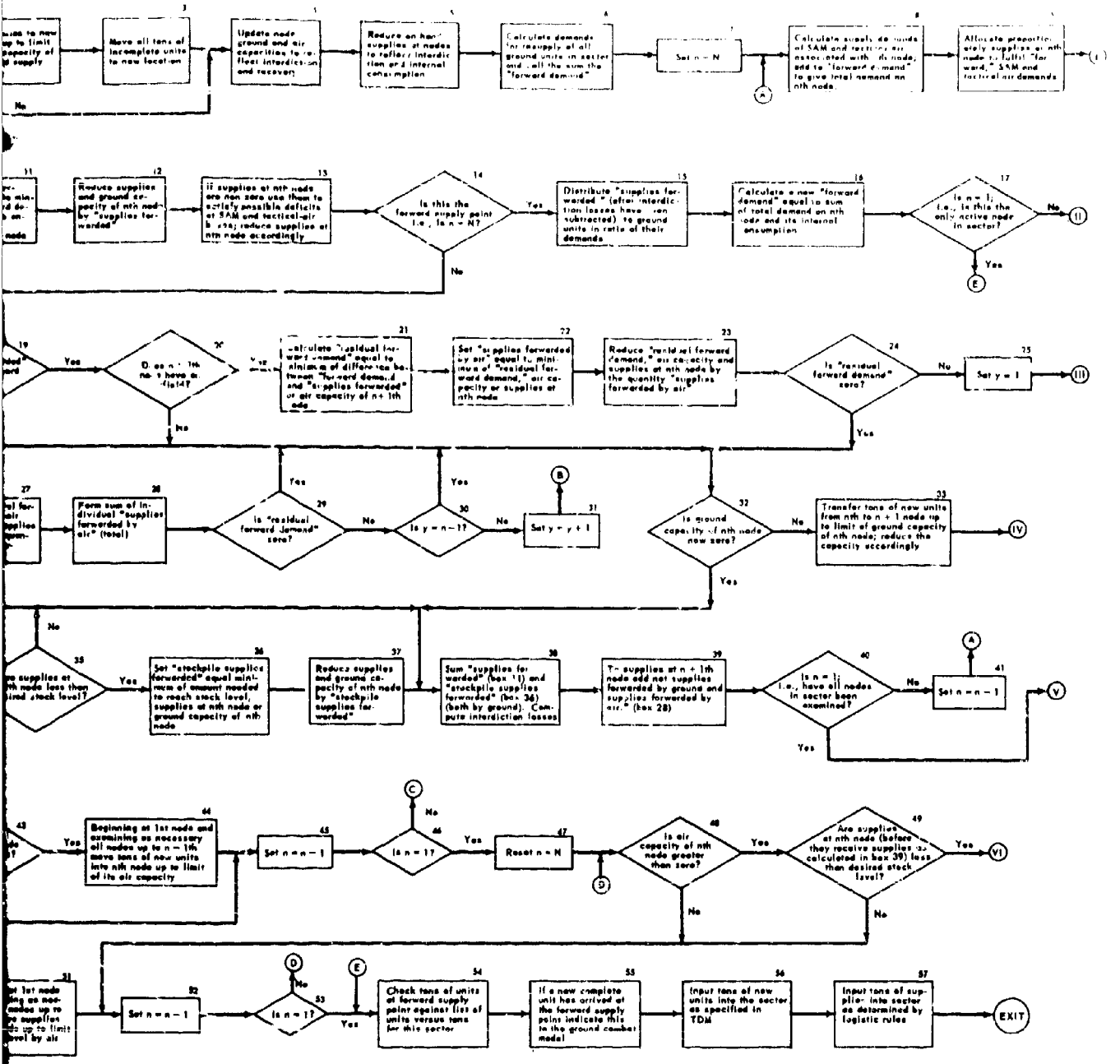

Fig. A2—Flow Chart of Logistics Model

One side, one sector.

1

2

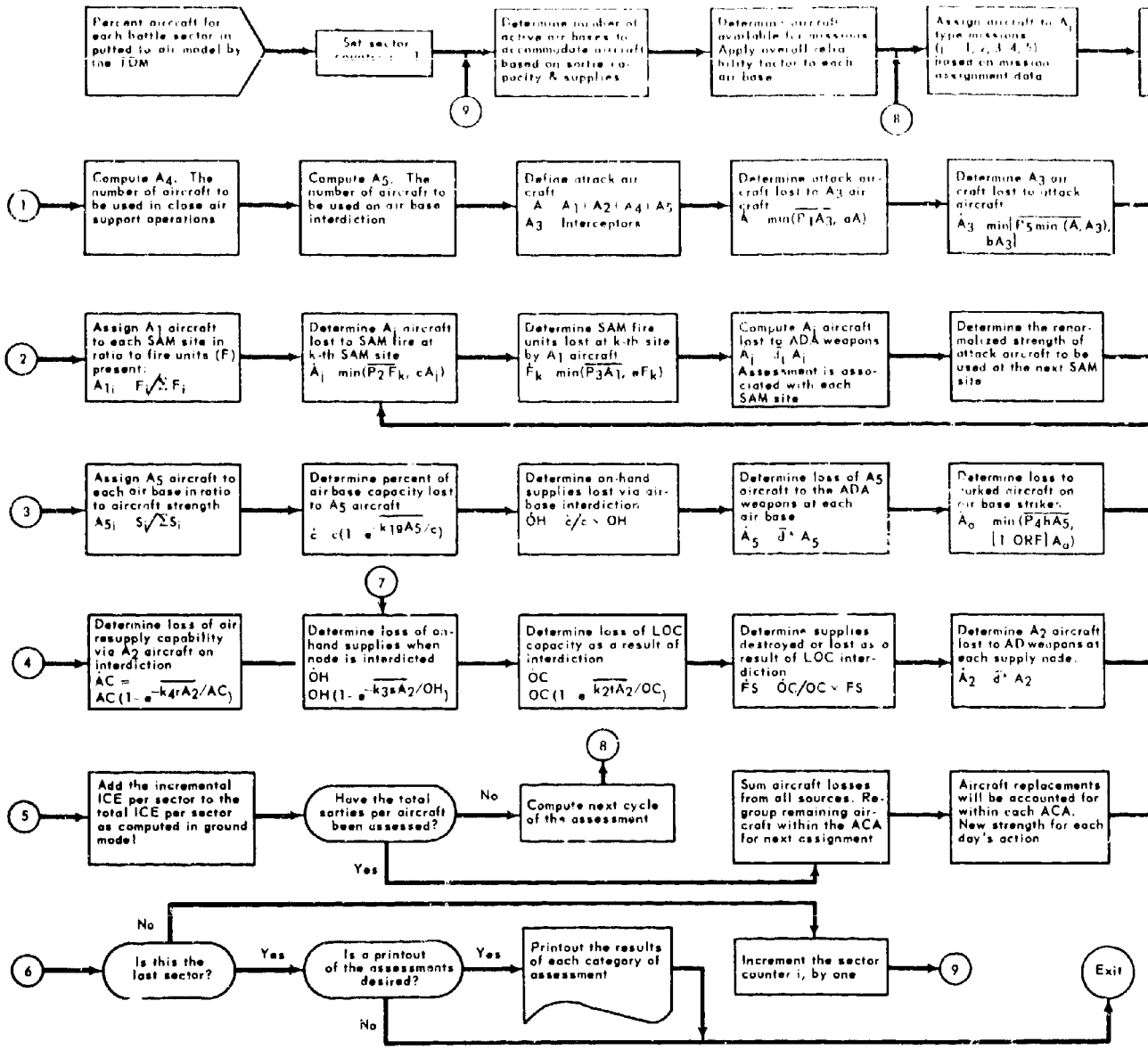

Fig. A3—Flow Chart of Tactical-Air Model

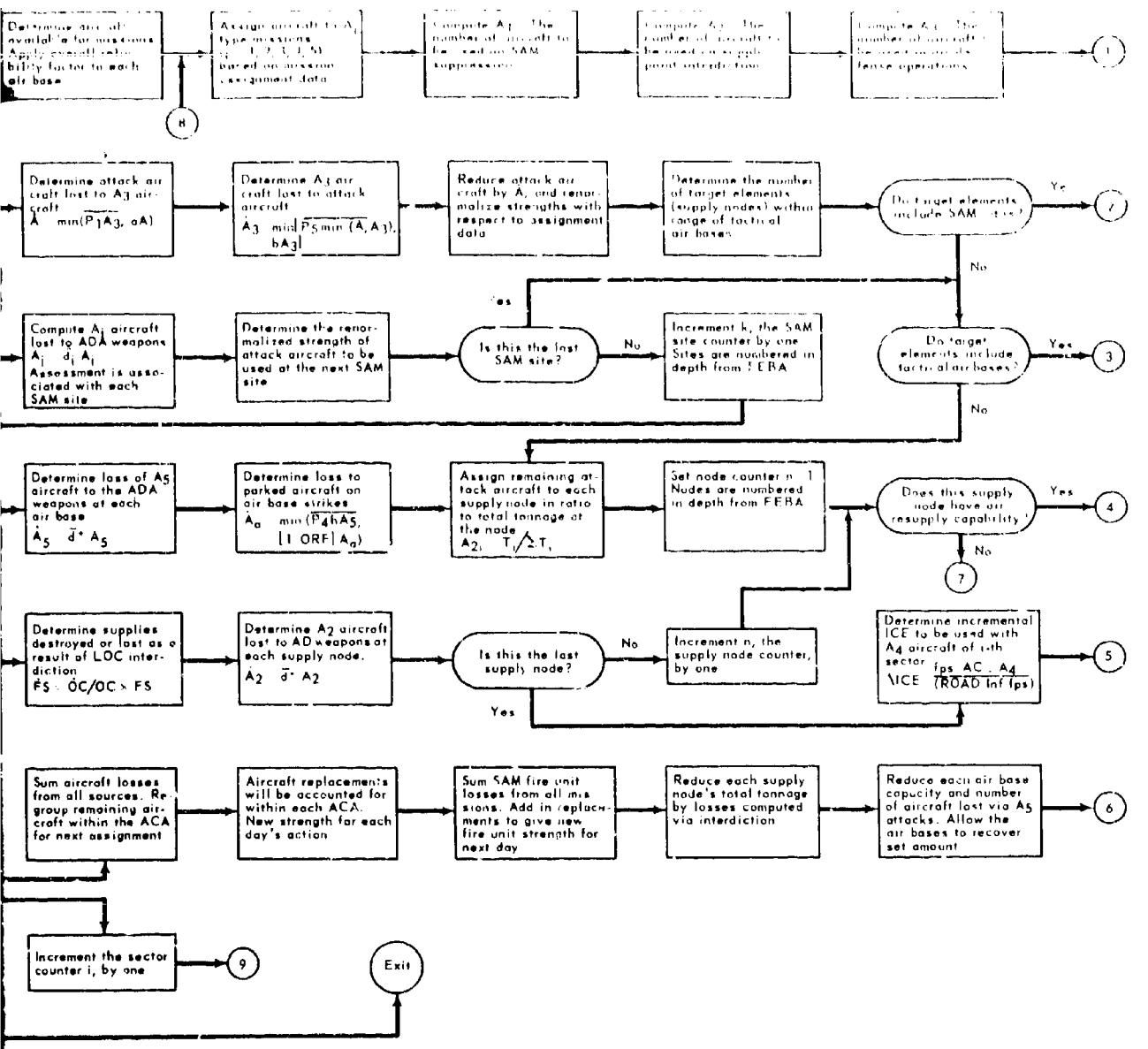

Fig. A3—Flow Chart of Tactical-Air Model

1

2

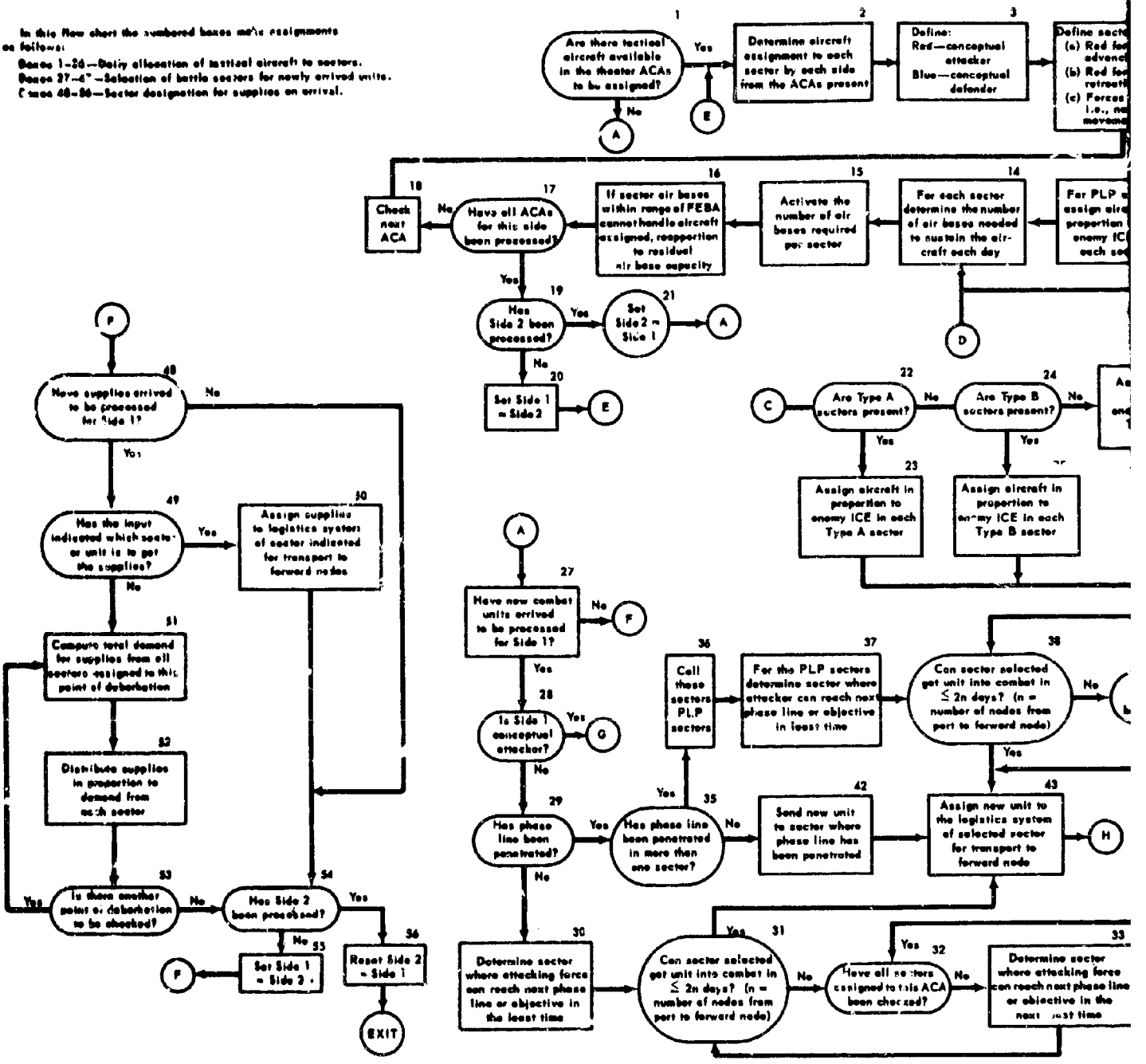

Fig. A4—Flow Chart of Tactical-Decision Model
*Phase line penetrated (PLP).

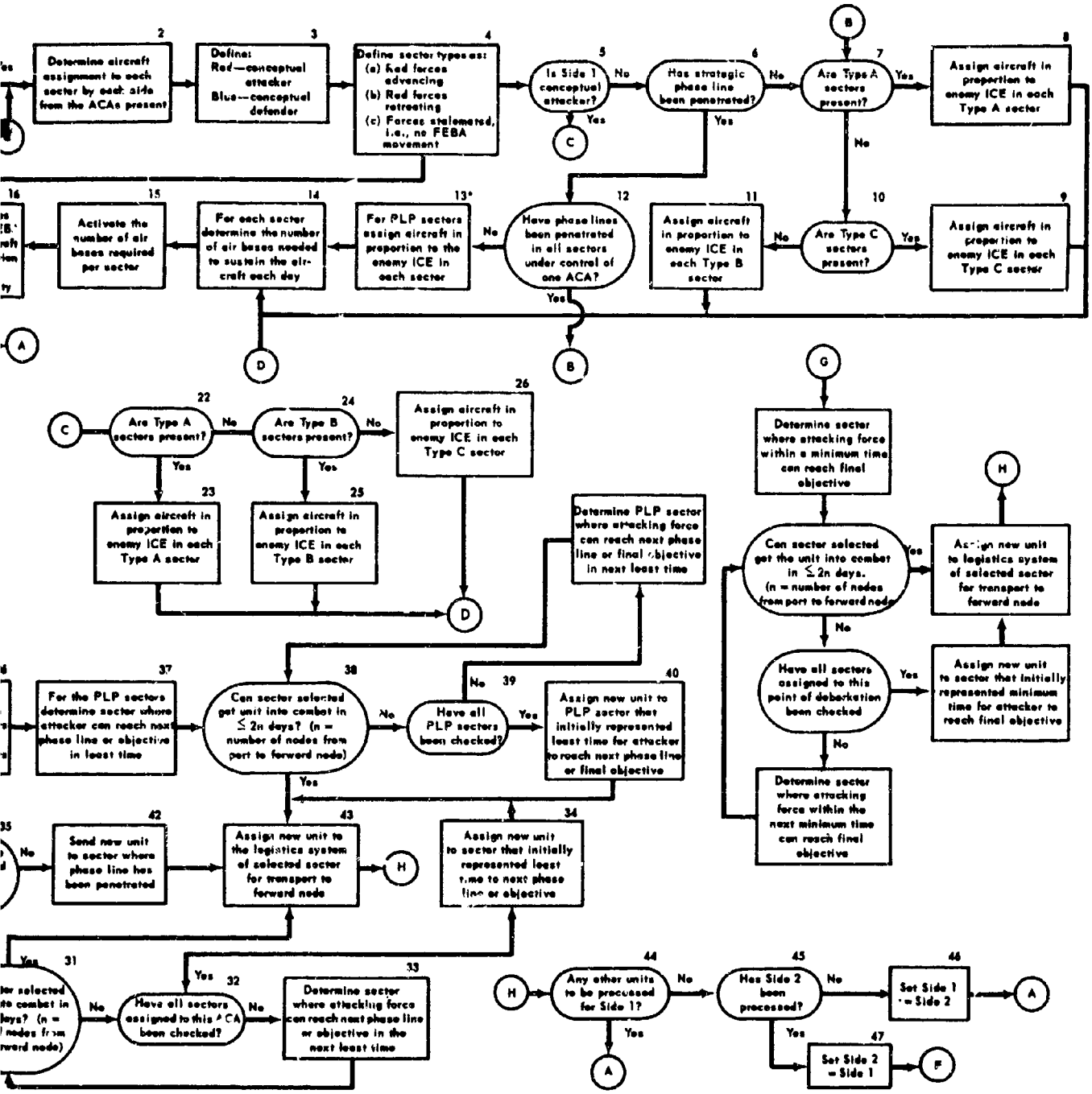

Fig. A4—Flow Chart of Tactical-Decision Model

*Phase line penetrated (PLP).

1

2

NOTATIONS USED

This list of notations defines terms used in the assessment of air-model interactions.

A_j number of aircraft assigned to j-type mission where
- j = 1, SAM suppression
- j = 2, interdiction
- j = 3, air defense
- j = 4, CAS
- j = 5, air-base interdiction

P_1 kill probability of interceptors vs attack aircraft

P_5 kill probability of attack aircraft vs interceptors

a attrition constant to attack aircraft, i.e., percentage of losses that attack aircraft will expect from interceptors; the value is 1.0 unless mission can be aborted

b attrition constant to interceptors, i.e., percentage of losses that interceptors will sustain from attack aircraft

c_j attrition constant to aircraft on j-type mission as one SAM site is penetrated—may be viewed as expected losses for the type of mission assigned

P_{2_j} SSKP of a SAM-fire unit vs attacking aircraft on j-type mission

d_j attrition constant to attack aircraft on j-type mission from ground-based air-defense weapons; this constant is relevant to air-defense weapons organic to deployed combat units

$P_{2_j}^*$ SSKP of SAM vs aircraft on a bypass flight of this site

d_j^* attrition constant to attack aircraft on j-type mission from rearward ADA

Note: $d_4^* = 0$

P_3 probability of attack aircraft destroying one SAM-fire unit; value should include air-to-surface missiles if present

e attrition constant to SAM-fire units vs attack aircraft, i.e., expected losses to SAM-fire units from attack aircraft

k_1 attrition constant to air-base capacity; ability to sustain sorties per day

f_i percentage of aircraft of ith sector air base unable to scramble when attacked

P_4 probability of killing a parked aircraft on one bombing and strafing pass

g percentage of A_5 aircraft that attack air-base facilities

h $(1-g)$ = percentage of A_5 aircraft that attacked parked aircraft

k_2 attrition constant to LOC throughput capacity, i.e., node output capacity

k_3 attrition constant to on-hand supplies

k_4 attrition constant to air-resupply capability

r percentage of A_2 aircraft that attack air-resupply capability

s percentage of A_2 aircraft that attack on-hand supplies

t percentage of A_2 aircraft that attack output capacity of given node, i.e., the LOC between nodes ($t = 1 - (r + s)$)

X maximum distance from active air base to the FEBA

Y minimum distance from active air base to the FEBA

L percentage of incoming aircraft losses that are assessed on return flight

TACTICAL-AIR-MODEL DATA SAMPLES

Data entry	Blue value	Red value	Data entry	Blue value	Red value
P_1	0.03	0.03	t	0.5	0.5
P_5	0.01	0.01	X	360 miles	230 miles
a	1.0	1.0	Y	60 miles	60 miles
b	0.02	0.02	L	0.2	0.2
c_j	1.0	1.0	Aircraft consumption rate, tons per sortie	12	4
P_{2_j}	0.10	0.08			
d_j	0.005	0.005	SAM consumption rate,* tons per battery	15	9
$P_{2_j}^*$	0.03	0.02			
d_j^*	0.003	0.003			
P_3	0.25	0.15	SAM basic load, tons per battery	45	30
e	1.0	1.0	Aircraft replacement rate,* per ACA	1	1
k_1	3.0	0.67			
f	0.21	0.27			
P_4	0.33	0.25	Air-base recovery rate,* %	8	8
g	0.5	0.5	SAM recovery rate,* fire unit	0.2	0.2
h	0.5	0.5			
k_2	27.0	6.0	Aircraft combat range, miles	420	300
k_3	59.0	13.0			
k_4	72.0	16.0	Sortie rate,* per aircraft	1	1
r	0.25	0.25	Aircraft reliability factor	0.68	0.63
s	0.25	0.25			

*An assumed daily rate.

REFERENCES

1. J. W. Johnson and R. E. Zimmerman, "Quick Gaming," RAC-TP-76, Research Analysis Corporation, Jan 63. SECRET
2. Lee G. Wentling Jr. et al, "A Programming Model for the Design of Strategic-Deployment Systems," RAC-TP-211, Research Analysis Corporation, Sep 66. UNCLASSIFIED
3. R. E. Zimmerman et al, "Impact of Arms Control and Disarmament on the Army," RAC-T-453, Research Analysis Corporation, Sep 65. SECRET
4. Marshall Andrews, "Rates of Advance in Land Attacks against Unprepared Forces," ORO-TP-10, Operations Research Office (now RAC), Nov 60. UNCLASSIFIED
5. Dept of Army, "Staff Officers' Field Manual: Organization, Technical, and Logistical Data," FM 101-10, Jan 66.
6. Robert J. Best, "Casualties and the Dynamics of Combat," RAC-TP-185, Research Analysis Corporation, Mar 66. CONFIDENTIAL
7. Historical Evaluation and Research Office, unpublished notes, Jun 66.
8. Dept of Air Force, "Close Air Support Board, Final Report," Vols I and IV, 15 Aug 63. SECRET
9. US Army Combat Developments Command, to RAC THEATERSPIEL Ltr, subject: "Mandrake Root Study—1965." SECRET
10. US Army War College, "Control Manual," Course 3, Part I, "Analytical War Game, 1959–1960 Curriculum," Oct 59. SECRET—RESTRICTED DATA
11. US Army Combat Developments Command, final report, "Measuring Combat Effectiveness Weapon and Unit Firepower Potentials," Dec 64. SECRET
12. Research Analysis Corporation, "THEATERSPIEL Manual," Vol VI, "Logistics Model," unpublished manuscript, Aug 66. UNCLASSIFIED
13. ——, "THEATERSPIEL Manual," Vol IV, "Tactical Air Model," unpublished manuscript, Aug 66. UNCLASSIFIED
14. John O. F. Dorsett, "Air Model in POMEX I," Research Analysis Corporation, unpublished manuscript, Oct 61. UNCLASSIFIED
15. US Army War College, "Analysis Seminar Control Manual," 1 Feb 66. SECRET
16. Dept of Army, "US Army Air Defense Employment," FM 44-1, Oct 65.

CONFIDENTIAL
Security Classification

DOCUMENT CONTROL DATA - R&D
(Security classification of title, body of abstract and indexing annotation must be entered when the overall report is classified)

1. ORIGINATING ACTIVITY (Corporate author) Research Analysis Corporation McLean, Virginia 22101	2a. REPORT SECURITY CLASSIFICATION CONFIDENTIAL 2b. GROUP 4

3. REPORT TITLE
COMPUTERIZED QUICK GAME: A THEATER-LEVEL COMBAT SIMULATION (U)
Volume I - Models

4. DESCRIPTIVE NOTES (Type of report and inclusive dates)
Technical Paper

5. AUTHOR(S) (First name, middle initial, last name)
Edward P. Kerlin
Donald W. Mader
Dudley H. Edwards

6. REPORT DATE November 1967	7a. TOTAL NO. OF PAGES 67	7b. NO. OF REFS 16
8a. CONTRACT OR GRANT NO. DA 44-188-ARO-1 b. PROJECT NO. RAC 007.110 c. d.	9a. ORIGINATOR'S REPORT NUMBER(S) RAC-TP-266 9b. OTHER REPORT NO(S) (Any other numbers that may be assigned this report) None	

10. DISTRIBUTION STATEMENT

11. SUPPLEMENTARY NOTES	12. SPONSORING MILITARY ACTIVITY OASD/DCSLOG Washington, D. C.

13. ABSTRACT

This paper describes a theater-level combat simulation developed by the Research Analysis Corporation to measure the effectiveness of combat troops deployed to various theaters of operations under varying levels of troop availability. Unlike a war game, a simulation permits extensive sensitivity analyses of the impact of uncertain assumptions or changes in the tactical situation on the outcome of the war. Simulated here are the effects of intratheater logistics, tactical aircraft, and tactical decisions on the outcome of ground combat between division-sized forces. The basic feature of the earlier RAC Quick Game is retained, in that division rates of advance are a function of force ratio. Force ratios are based on weapon firepower scores, which in turn are based in part on historical casualty rates and in part on theoretical studies. Aircraft mission assignments are established as families of curves and are used to adjust the mission performance of aircraft in various situations. The logistics model makes explicit the flow of troops and supplies over aggregated LOCs in a combat environment. The tactical decision rules determine, on the basis of the combat situation and available LOCs, where to deploy arriving combat elements and supplies.

DD FORM 1 NOV 65 1473

CONFIDENTIAL
Security Classification

CONFIDENTIAL
Security Classification

14. KEY WORDS	LINK A ROLE	LINK A WT	LINK B ROLE	LINK B WT	LINK C ROLE	LINK C WT
Combat simulation War gaming Theater-level gaming						

CONFIDENTIAL
Security Classification