UNCLASSIFIED

AD NUMBER
AD387057
CLASSIFICATION CHANGES
TO: unclassified
FROM: confidential
LIMITATION CHANGES
TO: Approved for public release, distribution unlimited
FROM: Distribution authorized to U.S. Gov't. agencies and their contractors; Administrative/Operational Use; JAN 1968. Other requests shall be referred to Air Force Rocket Propulsion Lab., Edwards AFB, CA.
AUTHORITY
31 Jan 1980, DoDD 5200.10; AFRPL ltr, 5 Feb 1986

THIS PAGE IS UNCLASSIFIED

AD 382 057

AUTHORITY: AFRPL

ltr. 5 Feb 86

THIS REPORT HAS BEEN DELIMITED
AND CLEARED FOR PUBLIC RELEASE
UNDER DOD DIRECTIVE 5200.20 AND
NO RESTRICTIONS ARE IMPOSED UPON
ITS USE AND DISCLOSURE.

DISTRIBUTION STATEMENT A

APPROVED FOR PUBLIC RELEASE;
DISTRIBUTION UNLIMITED.

SECURITY MARKING

The classified or limited status of this report applies to each page, unless otherwise marked.
Separate page printouts MUST be marked accordingly.

THIS DOCUMENT CONTAINS INFORMATION AFFECTING THE NATIONAL DEFENSE OF THE UNITED STATES WITHIN THE MEANING OF THE ESPIONAGE LAWS, TITLE 18, U.S.C., SECTIONS 793 AND 794. THE TRANSMISSION OR THE REVELATION OF ITS CONTENTS IN ANY MANNER TO AN UNAUTHORIZED PERSON IS PROHIBITED BY LAW.

NOTICE: When government or other drawings, specifications or other data are used for any purpose other than in connection with a definitely related government procurement operation, the U. S. Government thereby incurs no responsibility, nor any obligation whatsoever; and the fact that the Government may have formulated, furnished, or in any way supplied the said drawings, specifications, or other data is not to be regarded by implication or otherwise as in any manner licensing the holder or any other person or corporation, or conveying any rights or permission to manufacture, use or sell any patented invention that may in any way be related thereto.

AFRPL-TR-68-2
Part 1

(Title Unclassified)

THROTTLING AND SCALING STUDY FOR ADVANCED STORABLE ENGINE

Report 68-C-0008-F

Part 1 of Two Parts

S. R. Andrus
H. L. Bishop
R. E. Duckering
J. A. Gibb
A. W. Nelson
V. H. Ransom

AEROJET-GENERAL CORPORATION
Advanced Storable Engine Program Division
Liquid Rocket Operations
Sacramento, California

Final Report AFRPL-TR-68-2, Part 1
January 1968

SPECIAL HANDLING REQUIRED

In addition to security requirements which must be met, this document is subject to special export controls, and each transmittal to foreign governments or foreign nationals may be made only with prior approval of AFRPL (RPFR/STINFO) Edwards, California 93523.

AIR FORCE ROCKET PROPULSION LABORATORY
Research and Technology Division
Air Force Systems Command
United States Air Force
Edwards, California

GROUP 4
DOWNGRADED AT 3 YEAR INTERVALS; DECLASSIFIED AFTER 12 YEARS

"THIS DOCUMENT CONTAINS INFORMATION AFFECTING THE NATIONAL DEFENSE OF THE UNITED STATES WITHIN THE MEANING OF THE ESPIONAGE LAWS, TITLE 18, U.S.C., SECTIONS 793 AND 794 ITS TRANSMISSION OR THE REVELATION OF ITS CONTENTS IN ANY MANNER TO AN UNAUTHORIZED PERSON IS PROHIBITED BY LAW."

AEROJET-GENERAL CORPORATION
A SUBSIDIARY OF THE GENERAL TIRE & RUBBER COMPANY

1173

AD 387057

Best
Available
Copy

LEGAL NOTICE

"When U.S. Government drawings, specifications, or other data are used for any purpose other than a definitely related Government procurement operation, the Government thereby incurs no responsibility nor any obligation whatsoever, and the fact that the Government may have formulated, furnished, or in any way supplied the said drawings, specifications, or other data, is not to be regarded by implication or otherwise, or in any manner licensing the holder or any other person or corporation, or conveying any rights or permission to manufacture, use, or sell any patented invention that may in any way be related thereto."

(Title Unclassified)

THROTTLING AND SCALING STUDY

FOR

ADVANCED STORABLE ENGINE

Report 68-C-0008-F

Part 1 of Two Parts

S. R. Andrus
H. L. Bishop
R. E. Duckering
J. A. Gibb
A. W. Nelson
V. H. Ransom

SPECIAL HANDLING REQUIRED

In addition to security requirements which must be met, this document is subject to special export controls, and each transmittal to foreign government or foreign nationals may be made only with prior approval of AFRPL (RPPR/STINFO) Edwards, California 93523.

GROUP 4
DOWNGRADED AT 3 YEAR INTERVALS; DECLASSIFIED AFTER 12 YEARS

"THIS DOCUMENT CONTAINS INFORMATION AFFECTING THE NATIONAL DEFENSE OF THE UNITED STATES WITHIN THE MEANING OF THE ESPIONAGE LAWS, TITLE 18, U.S.C., SECTIONS 793 AND 794. ITS TRANSMISSION OR THE REVELATION OF ITS CONTENTS IN ANY MANNER TO AN UNAUTHORIZED PERSON IS PROHIBITED BY LAW."

AEROJET-GENERAL CORPORATION
A SUBSIDIARY OF THE GENERAL TIRE & RUBBER COMPANY

3221T

Report 68-C-0008-F, Part 1

FOREWORD

This is the final report documenting the technical accomplishments of the ARES (Advanced Rocket Engine Storable) Throttling-Scaling Design Study Program under Contract F04611-68-C-0008. Included also in this report are the results of an Aerojet-General Corporation-sponsored design of a throttlable-restartable 100K ARES engine which was used as the baseline engine for this design study. The period of performance covered by this report is from 10 July 1967 through 10 October 1967.

The throttling and scaling study was conducted by the Advanced Systems Division of the Liquid Rocket Operations, Aerojet-General Corporation, Sacramento, California under the direction of Mr. R. Beichel. Technical and managerial control was provided by Mr. J. A. Gibb. Mr. S. R. Andrus was the project engineer.

This report contains classified information extracted from the ARES Final Report, Phase I, AFRPL-TR-67-75 dated August 1967, Confidential, Group 4, Contract AF 04(611)-10830.

This report was prepared in two separate parts. Part 1 contains the technical accomplishments while Part 2 (Appendix I) contains ARES Thrust Scaling Data.

This technical report has been reviewed and is approved.

C. D. Penn
Program Manager, Liquid Rocket Division,
Air Force Rocket Propulsion Laboratory
Edwards, California

(This page is Unclassified)

Report 68-C-0008-F, Part 1

UNCLASSIFIED ABSTRACT

(U) This is the final report documenting the technical accomplishments of the ARES (Advanced Rocket Engine Storable) Throttling and Scaling Study Program under Contract F04611-68-C-0008. Included also in this report are the results of an Aerojet-General Corporation-sponsored design of a throttlable-restartable 100K ARES engine which was used as the baseline engine for this design study.

(U) Throttlable, restartable ARES (Advanced Rocket Engine Storable) engine designs are presented at 25,000, 100,000, and 500,000 lb rated thrust levels. On the basis of these designs, engine thrust scaling parametric data are presented over a thrust range of 25,000 to 500,000 lb with nozzle expansion ratios of 50:1 and 150:1.

TABLE OF CONTENTS

Part 1

		Page
I.	Introduction	I-1
II.	Summary	II-1
III.	100K Throttlable-Restartable Base-line Engine	III-1
	A. General	III-1
	B. Description	III-1
	C. Engine Throttling Performance	III-10
	D. Weight Breakdown	III-12
IV.	Integrated Auxiliary Power Package (Task I)	IV-1
	A. Objectives and Approach	IV-1
	B. Operational Requirements	IV-2
	C. Thrust Vector Control	IV-4
	D. Roll Control Design	IV-5
	E. Tank Pressurization Design	IV-8
	F. Integrated System	IV-11
V.	Low Frequency Analysis (Task II)	V-1
	A. Objectives and Approach	V-1
	B. Mathematical Model	V-1
	C. Stability Analysis	V-2
	D. Results	V-2
	E. Engine System Changes	V-3
VI.	25K Engine Design (Task III)	VI-1
	A. Objectives and Approach	VI-1
	B. Chamber Pressure Optimization	VI-1
	C. Description	VI-5
	D. Engine Throttling Performance	VI-7
	E. Weight Breakdown	VI-8

TABLE OF CONTENTS (cont.)

		Page
VII.	500K Engine Design (Task IV)	VII-1
	A. Objective and Approach	VII-1
	B. Description	VII-1
	C. Engine Throttling Performance	VII-3
	D. Weight Breakdown	VII-4
VIII.	Engine Thrust Scaling (Task V)	VIII-1
	A. Objective and Approach	VIII-1
	B. Performance Scaling	VIII-1

Part 2

APPENDIX I

I.	Introduction	I-1
II.	ARES Engine Description	II-1
III.	Scaling Data	III-1

TABLE LIST

Part 1

	Table
Engine Changes for Throttling Capability	III-I
Material List, Engine Module Assembly, 100K ARES	III-II
Throttling Performance, 100K ARES	III-III
Symbol List for Throttling Computer Study	III-IV
100K ARES Weight and Inertia Summary	III-V
100K Prototype Production ARES Weight and Inertia Summary	III-VI
IAPP Requirements, Current Operational Vehicles	IV-I
Throttling Performance, 25K ARES	VI-I
25K ARES Weight and Inertia Summary	VI-II
25K Prototype Production ARES Weight and Inertia Summary	VI-III
Throttling Performance, 500K ARES	VII-I
500K ARES Weight and Inertia Summary	VII-II
500K Prototype Production ARES Weight and Inertia Summary	VII-III
ARES Thrust Chamber Performance Summary	VIII-I

FIGURE LIST

Part 1

	Figure
ARES Engine, 100K, Fixed Thrust	I-1
ARES Engine, 100K, Throttlable	III-1
HIPERTHIN Injector Throttling Characteristics	III-2
Secondary Combustor Injector	III-3
Nozzle Extension	III-4
Envelope 100K Throttlable ARES	III-5
ARES Throttlable Engine Schematic	III-6
ARES Start and Shutdown	III-7
Throttling Performance, 100K ARES	III-8
Typical Transpiration Coolant Flow During Throttling	III-9

FIGURE LIST (cont.)

	Figure
ARES External View with IAPP Specification	IV-1
IAPP System Using Engine Gas	IV-2
IAPP System Using Engine Liquids	IV-3
ARES Throttling Stability	V-1
Stabilizing Effects of Engine Changes	V-2
Performance Loss Summary for Different Design Pressures	VI-1
Vehicle Payload Loss for Different Design Pressures	VI-2
Throttling Performance for Different Design Pressures	VI-3
ARES Engine, 25K, Throttlable	VI-4
Envelope 25K Throttlable ARES	VI-5
Throttling Performance, 25K ARES	VI-6
ARES Engine, 500K, Throttlable	VII-1
Envelope, 500K, Throttlable ARES	VII-2
Throttling Performance, 500K ARES	VII-3

I.

INTRODUCTION

(U) This report documents the technical accomplishments of the ARES (Advanced Rocket Engine Storable) Throttling-Scaling Design Study Program, Contract F04611-68-C-0008, from 10 July 1967 through 10 October 1967. A design for a 100K throttlable-restartable ARES prepared under an Aerojet-General-sponsored program was used as the base-line engine design for this design study. This throttlable engine design was evolved from the ARES fixed-thrust engine, designed under Contract AF 04(611)-10830, reported in Reference 1, and described at the end of this section.

(U) The program had five basic objectives (Tasks) as listed and described:

Task I--Integrated Auxiliary Power Package

(U) Prepare layout designs of an Integrated Auxiliary Power Package (IAPP). The IAPP shall include engine roll control, gimbal actuator for thrust vector control, and propellant tank pressurization systems for the base-line 100K ARES.

Task II--Low Frequency Analysis

(U) Ascertain the suitability of the base-line 100K throttlable ARES to operate at discrete throttling points and identify system changes to establish satisfactory operation.

Task III--Design 25K Thrust Engine

(U) Establish the thrust chamber operating pressure value and prepare a layout design of a throttlable-restartable 25K engine based on the established thrust chamber pressure and on the 100K base-line engine cycle, component design, and control approaches.

I, Introduction (cont.)

Task IV--Design 500K Thrust Engine

(U) Prepare a layout design of a throttlable-restartable 500K engine based on the 100K base-line engine cycle, component design, and control approaches.

Task V--Engine Thrust Scaling

(U) Establish engine thrust scaling parametric data over a thrust range of 25K to 500K using design data from the 100K base-line engine and from the 25K and 500K engine designs generated from Tasks III and IV.

(U) The fixed-thrust ARES engine from Contract AF 04(611)-10830, from which the throttlable base-line engine for this contract (F04611-68-C-0008) was derived, is described briefly below to properly orient the reader to the evolutionary process leading into this report.

(C) The fixed-thrust ARES engine is turbopump fed, using a staged combustion cycle, and operates at high thrust chamber pressure (2800 psia). In this staged combustion cycle, the turbopump turbine is driven by oxidizer-rich gas consisting of nearly all of the oxidizer (N_2O_4) and sufficient fuel (AeroZINE 50) to raise the temperature of the mixture to 1200°F. The turbine then exhausts through the secondary injector into the thrust chamber where this gas is used to burn the remaining engine fuel to create a maximum energy gas. Pump discharge pressures are approximately 6000 psia and the primary combustor operates at a pressure of 4700 psia.

(U) This engine, shown in Figure I-1, consists of a turbopump assembly, primary combustor assembly, secondary combustor (thrust chamber) assembly, suction valves, and engine control valves. The turbopump assembly houses the pumps, the turbine, and the primary combustor assembly and is the main structural component of the engine.

I, Introduction (cont.)

(U) The turbopump is located on top of the thrust chamber; engine thrust is transmitted through the turbopump housing to the airframe. The single-stage turbine, oxidizer pump and fuel pump are all attached to a single shaft, which is oriented along the engine thrust axis and supported in the housing by propellant-lubricated bearings. Rotating speed is 30,000 rpm. Propellants enter the main pumps through inlets located on the side of the turbopump. Hydraulically driven boost pumps (not shown), driven by propellant recirculated from the main pump discharge, are attached to the bottom of the propellant tanks. Suction valves, which are used to isolate the engine from the propellants during storage, are attached to the inlets of the main pumps.

(U) The primary combustor, also located within the TPA housing, utilizes an annular 180-element pentad injector. The primary combustor fuel control valve is mounted at the inlet to the primary injector fuel manifold.

(U) The thrust chamber is regeneratively cooled with N_2O_4 from the injector face to the design area ratio of 20:1. N_2O_4 film cooling is used in the cylindrical and converging section of the thrust chamber to control the wall surface temperature.

(U) The secondary injector is sandwiched between the turbopump and the thrust chamber; the secondary combustor fuel control valve is located at the inlet to the secondary injector fuel manifold.

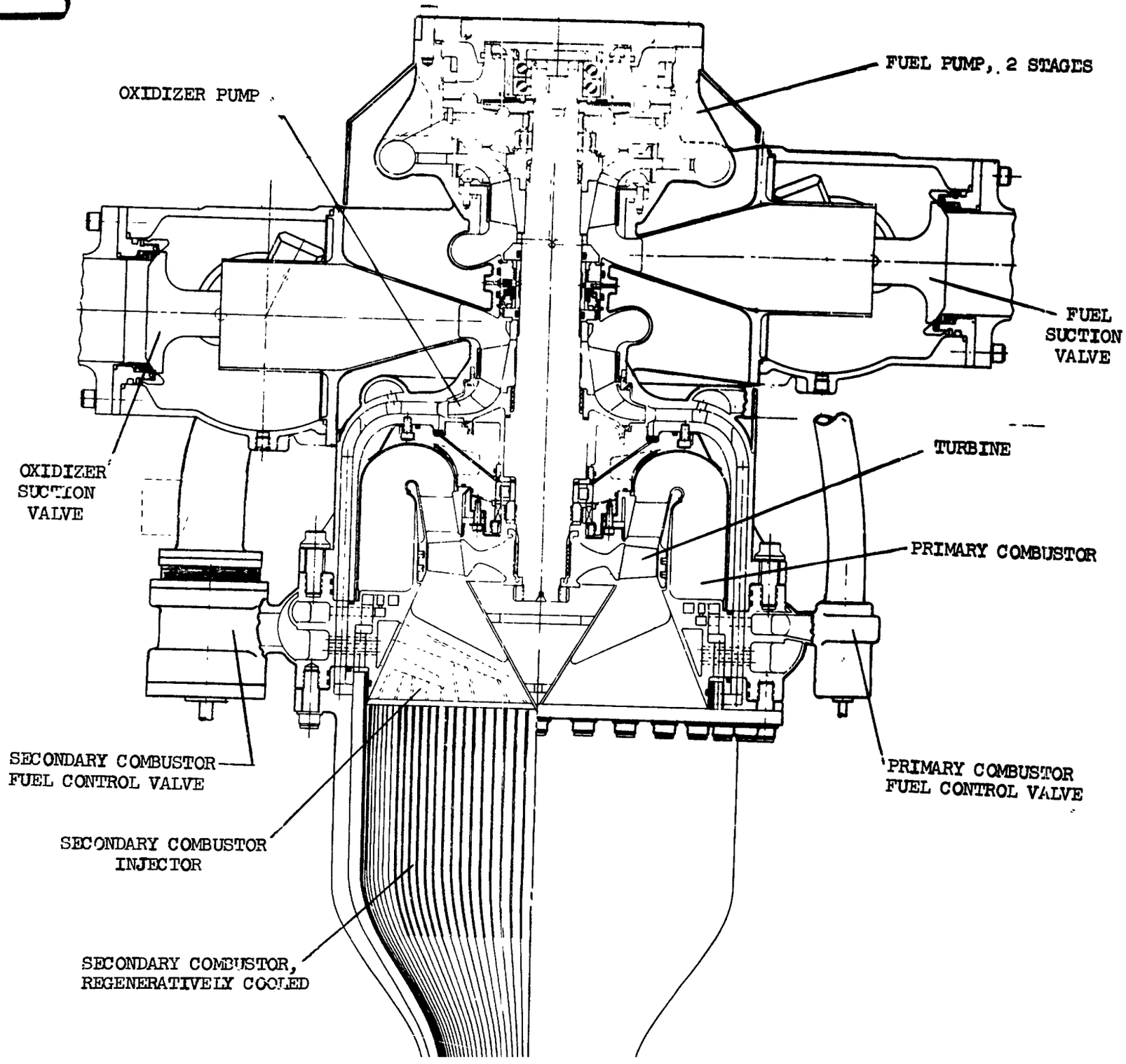
FUEL PUMP, 2 STAGES
OXIDIZER PUMP
FUEL SUCTION VALVE
TURBINE
OXIDIZER SUCTION VALVE
PRIMARY COMBUSTOR
SECONDARY COMBUSTOR FUEL CONTROL VALVE
PRIMARY COMBUSTOR FUEL CONTROL VALVE
SECONDARY COMBUSTOR INJECTOR
SECONDARY COMBUSTOR, REGENERATIVELY COOLED

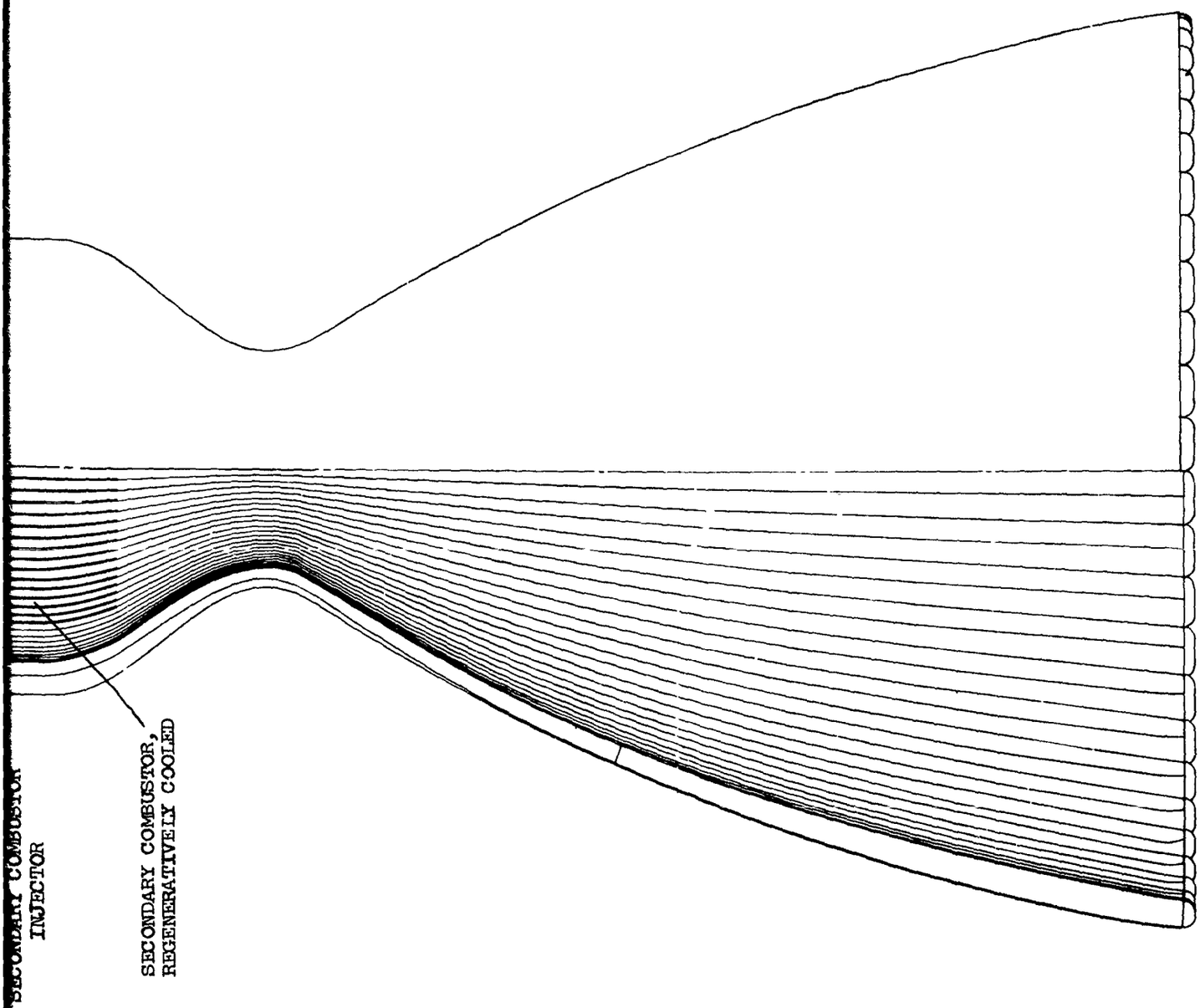

ARES Engine, 100K, Fixed Thrust (u)

Figure I-1

II.

SUMMARY

(U) All objectives of the program were accomplished and are summarized in the following paragraphs of this section and are described in detail in their respective sections. In addition to specific contract objectives, improvements were made to the 100K base-line engine based on test results from ARES thrust chamber testing under Contract AF 04(611)-10830. The updated configuration of this 100K base-line engine is described in Section III.

Task I--Integrated Auxiliary Power Package (IAPP)

(U) Functional requirements of an IAPP including roll control, thrust vector control, and propellant tank pressurization were surveyed for Titan, Apollo Service Module, and Transtage engines. From these requirements, requirements were established for the 100K base-line engine. Approaches to achieving the required IAPP were evaluated and a system concept was selected which offered the greatest compatibility with an engine-vehicle system that has the requirement of being throttlable and restartable. The selected concept includes bipropellant small thrustors for roll control and propellant settling rockets, high pressure fuel-actuated (fuel from engine) gimbal actuators for thrust vector control, and main tank injection for tank pressurization. Detail description of the IAPP system and subsystems is presented in Section IV of this report.

Task II--Low Frequency Analysis

(U) The cycle stability of the ARES 100K base-line engine incorporating both turbulent and laminar injectors was analyzed. The results indicated a general destabilization as the engine is throttled and becoming unstable at thrust levels between 15 to 20% of full thrust. Cycle stability at the low

thrust level can be achieved by adjusting the slope of the oxidizer pump characteristics head-capacity curve and increasing oxidizer injector pressure drop values. Detail description of the low frequency analysis is presented in Section V of this report.

Task III--Design 25K Thrust Engine

(U) Thrust chamber pressure value was established based on engine performance and payload considerations for a space vehicle. Results of this analysis indicated that the operating chamber pressure value of the base-line 100K engine is optimum for the 25K engine. On the basis of this established pressure, and the 100K base-line engine, a 25K engine design was prepared. The engine design included an engine layout, engine envelope, predicted performance and an estimated weight breakdown by major components. Detail description of the 25K engine design is presented in Section VI of this report.

Task IV--Design 500K Thrust Engine

(U) A 500K engine design was prepared on the basis of the 100K base-line engine which includes an engine layout, engine envelope, predicted performance and an estimated weight breakdown by major components. A detail description of the 500K engine is presented in Section VII of this report.

Task V--Engine Thrust Scaling

(U) Engine thrust scaling data were established over a thrust range of 25K to 500K. Scaling data were based on the calculated performance, envelope, and weight values generated from the 100K base-line engine and the 25K and 500K engines designed in this program. Estimated development and

II, Summary (cont.)

production cost data based on 1967 dollars are also given. The technical approach to compiling the thrust scaling data is presented in Section VIII of this report. Thrust scaling data are presented in Part 2 of this report as Appendix I.

III.

100K THROTTLABLE-RESTARTABLE BASE-LINE ENGINE

A. GENERAL

(U) The throttlable and restartable ARES engine, which is the base-line engine for this throttling and scaling study, is described below. The changes, incorporated to convert the ARES fixed-thrust engine to this throttlable-restartable base-line engine, are also described.

B. DESCRIPTION

1. Performance Rating

(C) The throttlable-restartable ARES base-line engine utilizes the same staged combustion cycle with an oxidizer-rich primary combustor as did the fixed-thrust engine. The design performance ratings of the fixed-thrust and throttlable ARES engines are tabulated below.

	ARES Fixed-Thrust Engine, Contract AF 04(611)-10830	ARES Throttlable Engine	
	Sea Level	Vacuum	Sea Level
Thrust, lbf	100,000	111,066	95,500
Specific impulse, predicted, sec	285	316.5	271.8
Specific impulse, efficiency, %	91.7	91.7	91.7
Nozzle area expansion (80% bell)	20:1	50:1	50:1
Propellants		N_2O_4/AeroZINE 50	
Chamber pressure, psia		2800	
Mixture ratio, Injector		2.2	
NPSH, fuel, ft		20	
NPSH, oxidizer, ft		20	

III, B, Description (cont.)

(U) The basic change in performance rating of the throttlable engine compared to the original fixed-thrust engine resulted from the increased nozzle expansion ratio. The I_s efficiency (percent of theoretical) and chamber pressure remained the same. The engine basic flows were not changed, since the nominal chamber throat area (21.35 sq in.) was retained.

2. Throttling Design Changes

(U) The Phase I ARES engine undergoing component testing under Contract AF 04(611)-10830 was designed to achieve specified performance at full thrust. As designed, the engine could be throttled to 80% of full thrust while maintaining constant engine mixture ratio by adjusting the primary and secondary combustor fuel-control valves. As part of an Aerojet-General-sponsored design study effort, system changes were defined that would provide the engine with 10:1 throttling and restart capability. The engine system requirements to evolve throttlable-restartable engines and the physical and functional changes to accomplish these requirements are shown in Table III-I. It can be seen from this table that the major changes to make the fixed-thrust engine throttlable were the inclusion of throttlable thrust chamber components and the increase of the first-stage fuel pump discharge pressure. The first-stage fuel pump discharge pressure selected permits throttling at fixed-engine mixture ratio by use of the primary combustor fuel control valve only. A HIPERTHIN* primary injector was incorporated because 10:1 throttling has been demonstrated on this type of injector. The transpiration-cooled chamber was incorporated because this chamber was selected over the regeneratively cooled chamber in the ARES test program. The transpiration-cooled chamber is also better adaptable to throttling than the regeneratively cooled chamber. The suction valves were moved upstream of the boost pumps to provide more positive shutoff for space coast periods. All other desirable features of the fixed-thrust ARES were retained.

*Aerojet General designation denoting High Performance Throttlable Injector.

III, B, Description (cont.)

3. Layout Design

(U) A layout design of the 100K throttlable ARES in shown in Figure III-1. The engine consists of a turbopump assembly, primary combustor assembly, secondary combustor (thrust chamber) assembly, fuel and oxidizer suction valves, and boost pumps. The turbopump assembly includes the main pumps, the turbine, the primary injector and combustor assembly, and the primary combustor fuel control valve, and forms the central structure of the module. The turbopump is mounted on top of the thrust chamber assembly, with thrust being transmitted through the turbopump housing to the gimbal and airframe. The thrust chamber assembly includes the combustion chamber, nozzle, secondary injector, and the secondary combustor fuel control valve. The entire engine is gimbaled from a gimbal assembly which is attached to the engine's thrust takeout pad.

(U) The turbine, oxidizer pump, and fuel pump are on a single shaft which is in line with the engine thrust axis and is supported on the housing by propellant-lubricated bearings. The single-stage turbine is on the lower end of the shaft and exhausts directly into the thrust chamber. The single-stage oxidizer pump is on the center of the shaft, with the two-stage fuel pump on the top end of the shaft. An interpropellant seal is located between the suction sides of the oxidizer pump and first-stage fuel pump to separate the propellants. The seal includes provisions for the introduction of an inert purge fluid if needed. Fuel and oxidizer enter the engine through vertical inlets on each side of the turbopump. In each suction inlet, a hydraulically driven boost pump is mounted with its shaft horizontal. A suction prevalve is integrated upstream of each boost pump.

(U) The primary combustor uses a radial inflow HIPERTHIN injector consisting of a stack of thin platelet washers, with fuel and oxidizer fed between and metered by alternate washers. HIPERTHIN injectors of radial inflow

III, B, Description (cont.)

and axial flow configurations have been tested. The axial flow type has demonstrated high performance with low L* chamber (15 in.) and has been throttled at constant mixture ratio over a 10:1 thrust range. The results of a test series to evaluate throttlability of this injector are shown in Figure III-2.

(C) The platelet injector concept currently being tested on the ARES 100K program was selected for the secondary combustor and is shown in Figure III-3. The fuel is introduced through platelets fabricated from pairs of photoetched plates; the oxidizer-rich turbine exhaust gas passes between the platelets. Injector parameters for the 100K design are as follows:

$\dot{w}_F$, lb/sec	84.1
Injector blade length, total, in.	240.0
$\dot{w}_F$/blade length, lb/sec/in.	0.35
$\dot{w}_{gas}$ injector, lb/sec	248.0
Net gas area, in.^{2}	42.5
Average gas flow, lb/sec/in.^{2}	5.84
Gross area, in.^{2}	72.5 (ref)
Blade area, total, in.^{2}	30.0 (ref)

(U) The secondary combustor, or thrust chamber, shown in Figure III-1, is transpiration-cooled to the throat and downstream to the point where static pressure is 30 psia; from that point an extension nozzle is cooled by the coolant-carryover boundary layer and radiation. The basis for selecting 30-psia pressure for the interface between the transpiration-cooled chamber and the nozzle extension is described in Section VI,B. The transpiration-cooled thrust chamber uses platelet washers for metering the required amounts of oxidizer into the thrust chamber wall. Experimental configurations of the platelet injector and the transpiration-cooled chamber are currently being tested at 100K thrust under ARES Contract AF 04(611)-10830. The nozzle extension is similar in design to the nozzle on the Apollo service module engine, which is shown in Figure III-4.

III, B, Description (cont.)

(U) All of the engine's key load-carrying structural parts are cooled by the liquid propellants flowing through the structure. The warm internal components and hot gas (1200°F) are thermally isolated from the structural portion of the housing by the high volume oxidizer flow. The fuel pump circuits are isolated from hot parts; this eliminates heat soak-back to these components on shutdown.

(U) An external envelope drawing of the engine is shown in Figure III-5. The integrated auxiliary power package (IAPP) shown in this figure is discussed in Section IV.

(U) A list showing the parts breakdown and materials considered for this engine design is shown in Table III-II. Included in this table are component environmental temperature values and the type of fluid exposure.

4. Cycle

(C) The ARES engine staged-combustion cycle with its oxidizer-rich primary combustor can best be described with the use of the schematic in Figure III-6. Propellants enter the engine through the suction valves, and are pumped by the 8000-rpm boost pumps to a pressure of 85 psia and 160 psia, fuel and oxidizer, respectively, which is required for the 30,000-rpm main pumps. All of the oxidizer (N_2O_4) is then pumped to 4960 psia in the main oxidizer pump with most of it continuing to the primary combustor injector and the remainder flowing to three low-flow circuits. All of the fuel is pumped to 5050 psia in the first-stage fuel pump. Twenty percent of the engine fuel then enters the second-stage fuel pump where it is pumped to 5550 psia and passes through the primary combustor fuel control valve to the primary injector. The oxidizer and fuel enter the primary combustor where they combine hypergolically to form a 1185°F hot gas. This oxidizer-rich hot gas passes through the turbine, and then is exhausted into the thrust chamber. The major portio

of the fuel flow from the first-stage pump is ducted through the secondary combustor fuel control valve to the main injector where it is injected into the thrust chamber. This fuel burns with the oxidizer-rich turbine exhaust in the thrust chamber.

(U) In addition to the major flow circuits, the engine has several low-flow circuits. Each boost pump is hydraulically driven by approximately 8% of the propellant that is bled from the main pump discharge and ducted to the boost pump drive turbine, which then exhausts into the boost pump discharge. In the main turbopump, oxidizer for bearing coolant is bled from the pump discharge, passed through the oxidizer bearings, and discharged into the turbine inlet where it provides some turbine cooling. High pressure fuel from the first-stage pump is used to cool the fuel pump bearings. Secondary combustor transpiration coolant flow (N_2O_4) is tapped from the oxidizer circuit at the primary injector.

(U) The engine's two fuel control valves perform three functions: (1) propellant phasing is controlled during start and shutdown by sequencing both the primary and secondary fuel control valves, (2) engine throttling is achieved by actuation of the primary combustor fuel control valve (PCFCV) to obtain the desired thrust, and (3) engine mixture ratio is established by the preset open position of the secondary combustor fuel control valve (SCFCV). No oxidizer control valve is required.

5. Design Point Operation

(U) The predicted engine and component operating characteristics at design point and at various thrust points down to 10% are shown in Table III-III. Engine throttling performance is discussed in Section III, C. The parameter symbols listed at the left of the columns are defined in Table III-IV. This operating point is based on predicted component performances,

on allocated pressure drops or passage friction loss characteristics throughout the system, and on the required thrust chamber transpiration oxidizer coolant flow rate. A computerized steady-state mathematical model of the engine was used to calculate this operating point. The two fuel control valves are adjusted to their noted K_w values to attain the operating point.

6. Engine Start and Shutdown

(U) The engine is started with propellant tank pressure, the predicted start and shutdown sequence being shown graphically in Figure III-7. Initially, all valves are in the closed position. At the start command signal, the oxidizer and fuel suction valves are sequenced open in that order to admit propellants to the engine and assure an oxidizer lead. The primary combustor fuel control valve (PCFCV) is then opened to its 5% open position to admit fuel into the primary combustor. Primary combustor ignition occurs and the turbopump starts to accelerate. When first-stage fuel pump discharge pressure rises to 150 psi, it actuates the secondary combustor fuel control valve (SCFCV) open and secondary ignition occurs. The primary combustor fuel control valve is then sequenced further open to accelerate the engine, at a controlled rate, to steady-state operation at 10% thrust. The primary combustor fuel control valve can then be opened to the position of desired thrust at a rapid, controlled rate such that maximum allowable turbopump acceleration is not exceeded.

(U) Steady-state mixture ratio is maintained by an adjustable stop on the secondary combustor fuel control valve, which is preset at engine acceptance testing. Thrust is set simply by the position of the primary combustor fuel control valve.

III, B, Description (cont.)

(U) Engine shutdown is initiated by the shutdown command signal, which closes the primary combustor fuel control valve. When first-stage fuel pump discharge pressure drops below 150 psi, the secondary combustor fuel valve and both suction valves close.

7. Vacuum Start, Restart and Shutdown

(U) The throttlable-restartable ARES, as a space engine, is designed to start at sea level or in a vacuum, then to shutdown and coast for a few seconds or several weeks, and then to restart. It is assumed for vacuum restart that the vehicle will provide propellants to the engine by settling rockets or some other means. Vacuum starting and restarting of the engine have been studied for two systems of propellant tank pressurization as discussed in Section IV of this report. Engine starting sequence would be as shown in Figure III-7 for the case where sufficient tank pressure exists and vehicle settling rockets are used. The engine starting sequence for the main tank injection system involves the flowing of propellant from the vehicle-mounted accumulators to pressurize the propellant tanks and settle propellants prior to an otherwise typical start.

(U) It is anticipated that the vacuum engine overall start duration may be reduced as compared to the sea-level start plot shown because the downstream pressure in a vacuum is zero during fill. Since all propellants are gaseous before the development of back pressure, propellants will reach the primary combustor sooner and an earlier ignition can be expected. The pressure ratio across the turbopump turbine will be higher resulting in a relatively higher turbine torque, thus making greater utilization of the turbopump to accelerate the engine fill. The existence of vaporized oxidizer in the engine will result in oxidizer vapor entering the fuel manifolds prior to fuel fill. This condition exists in all engines started at altitude, including Apollo and Transtage engines which use the same propellants. Neither of these engines require altitude purging.

III, B, Description (cont.)

(U) Propellant freezing can occur if the propellant expands over a very large pressure ratio from a small opening. This occurs when the valves are first opened; however, experience has shown that the amount of frozen propellants formed during start are insignificant because the flow rate of propellant causes a rapid rise in back pressure. Ignition of propellants in the primary combustor at high mixture ratio will remove any frozen oxidizer from the secondary combustor (thrust chamber) injector and transpiration coolant washers prior to fuel flow to the secondary combustor.

(U) The vacuum shutdown of the engine will be essentially the same as the sea-level case shown in Figure III-7 except that the propellants will vaporize and leave the engine without requiring a purge. The high vapor pressure of the N_2O_4 will result in its dissipation first. This early dissipation due to vaporization will cool the warm turbine rotor and primary combustor walls, to minimize engine heat soak-back. For sea-level testing, the ARES thrust chamber utilizes a shutdown purge in the oxidizer system to clear the system of oxidizer followed by a purge of the fuel circuits. The vacuum shutdown procedure described above would be similar to the current sea-level test experience. The fuel will eventually leave the engine without re-opening the fuel control valves. This shutdown sequence is also consistent with a minimum tailoff impulse since most residual propellant leaves the engine without burning.

(U) Engine restarting after a short space coast period does not require the engine to be completely drained and cold at the time of restart; however, fuel must not be introduced against parts that are hot enough to cause spontaneous decomposition. The secondary injector is the only place where this can occur. The maximum temperature predicted for the secondary injector after shutdown is approximately 700°F if no cooling benefit is derived from the propellants expelled from the engine. Laboratory test experience at Aerojet-General has shown that a temperature in excess of 1400°F is required to initiate the decomposition of AeroZINE 50 under these conditions. Therefore, no problem is foreseen in fuel decomposition on restart.

C. ENGINE THROTTLING PERFORMANCE

(U) The actual mechanism by which the primary combustor fuel valve controls the thrust is as follows. Increasing the resistance in this valve reduces the fuel flow to the primary combustor. This in turn reduces turbine temperature because of the higher mixture ratio and, to a lesser extent, reduces the turbine mass flow; the reduction in turbine drive energy results in decreased turbopump speed, pump discharge pressures, propellant flow rate, and thrust. The engine maintains nearly constant engine mixture ratio during throttling, because the designed relationship between fuel and oxidizer pump heads almost exactly compensates for the other factors that influence engine mixture ratio.

(U) Some of the engine performance parameters are plotted over a 10:1 throttle range in Figure III-8. Vacuum specific impulse drops at the lower thrust levels mainly because of the increase in recombination (kinetic), friction and combustion losses. (A breakdown of these and other losses in the thrust chamber is included under Performance Scaling in Section VIII,B.) Thrust chamber pressure drops nearly linearly with thrust as the engine is throttled.

(U) A comprehensive tabulation of engine and component performance and operating parameters at rated thrust and several throttle points down to 10% thrust is shown in Table III-III. Symbols are defined in Table III-IV. Referring to Table III-III, some of the more important engine and component requirements and characteristics are explained in the following paragraphs.

(C) On Sheet 2 of Table III-III in the group of secondary combustor parameters, WOFC and WFC/WT indicate the oxidizer film coolant flow and its ratio to total flow. At rated thrust, the coolant flow value is 23.2 lb/sec, or 6.6% of the total engine flow. This value corresponds to an I_s performance loss of 13.7 sec for a conical chamber, and was selected to meet the specified engine performance level of 91.7% of theoretical (see Table VIII-I for the performance loss breakdown). This transpiration coolant flow value gives a

calculated wall temperature of 1625°F for the cylindrical chamber configuration now undergoing testing. The conical chamber was adopted to achieve better compatibility between the injector and the cooled chamber. The ratio of coolant flow to engine flow is kept constant during throttling and provides a slight reduction in wall temperature at throttled conditions, on the basis of preliminary heat analysis. The analytical means of holding this constant percentage in the computer was with the expedient of a variable valve to represent the turbulent/laminar flow characteristic of the entire transpiration circuit. The equivalent flow factor for this circuit is shown as KWFCV (Sheet 1 of Table III-III); it decreases approximately 50% and defines the criteria required to maintain a constant percentage of coolant during throttling.

(U) This variation in K_w can be designed into a transpiration chamber, without the aid of a valve, by proportioning the appropriate amount of laminar-flow ΔP versus turbulent-flow ΔP. In fact, the fixed-thrust transpiration chambers with their 12 coolant flow compartments in the current ARES test program (Contract AF 04(611)-10830) have approximately the desired characteristic, even though they were not designed for a specific throttling characteristic. Predicted coolant flow characteristics are shown in Figure III-9 for the fixed-thrust chamber when exposed to predicted engine pressure values over the throttling range, where the solid line in the figure represents a constant coolant to engine flow ratio. Each compartment flow and/or the total coolant flow could be adjusted by proper design criteria to provide the desired throttling characteristic.

(U) The ΔP's assumed for the three liquid injector circuits in the engine are shown on Sheet 1 of Table III-III. (DPFJSC, DPOJPC, and DPFJPC). Each ΔP is relatively low to accommodate a laminar flow (low velocity), platelet injector design. The laminar flow characteristic enhances the throttlability of the engine by sustaining a reasonable ratio of ΔP injector to chamber pressure (see DP/PSF, DP/PPO, and DP/PPF on Sheet 2 of the table)

at low flow, throttled condition. If additional hardness is desired in the oxidizer circuit, substantial power margin is available in the turbine to accommodate future increase of the pump pressures.

(U) On Sheet 3 of Table III-III in the group of turbopump parameters, it can be seen that the pump flow parameter (Q/N) decreases to only 50% of design; this occurs at the low shaft speed of 7040 rpm which is 23% of design speed. Pump off-design operation has been limited to the negative slope portion of their H-Q curves.

(U) Turbine and pump efficiencies (see ETAT, ETAOM, ETAFM1 and ETAFM2 on Sheet 3 of the table) are well within Aerojet and industry demonstrated values for the conditions of turbine velocity ratio (U/C-GT on Sheet 3) and pump specific speeds and flows (NSO, NSF-1, NSF-2, QOSM, QFSM1, and QFSM2 on Sheet 3).

D. WEIGHT BREAKDOWN

(U) Calculated dry and wet weights and gimbal moment of inertia values for the 100K base-line engine are shown by component in Table III-V. Values for a lower-weight production prototype engine are shown in Table III-VI. The lower weight of this production prototype engine is achieved by utilizing two interface joints between the thrust chamber and the turbopump in place of the three joints shown in Figure III-1, which is a development engine design. Other weight reductions could also be achieved with a detailed weight reduction effort.

(U) The throttlable-restartable ARES engine is characteristically heavier than the fixed-thrust version described in Section I from Contract AF 04(611)-10830. This heavier weight results from the relatively higher fuel pump pressure

III, D, Weight Breakdown (cont.)

required for deep throttling, the radial inflow HIPERTHIN primary combustor injector desirable for throttling, and the integrated suction valve boost/pump assembly which improves restart. The total additive weight from these items is 115 lb.

(U) Also included in this summary is the calculated weight for the four valve actuators, which adds 27 lb, and the gimbal, which adds 19 lb. The propellant inlets for this engine are oriented vertically and integrated with the suction valves, which adds 41 lb but reduces the vehicle interface requirements and the vehicle suction line weight. This arrangement also reduces the amount of propellant that is trapped in the engine at the end of each firing, reducing the shutdown impulse and the loss of propellants in a multiple restart mission. The total weight of these additive items is 87 lb. The total of all of the items above amounts to 202 lb, which is included in the weight summary of Table III-V.

(U) The difference between the weights of engines with 50:1 and 150:1 nozzle extensions at a given thrust is relatively small and amounts to only 14 lb for the 100K size. The reason for this is that the contours of the 80% bell and the RAO nozzle contour are considerably different immediately downstream of the throat in the transpiration-cooled region. The 50:1 bell nozzle has a smaller included angle and is much longer in the downstream portion up to the point where the static pressure is 30 lb/in.^{2}; whereas the 150:1 RAO contour flares out more rapidly and obtains the required pressure ratio to get 30 psia in a shorter distance. Consequently, the transpiration-cooled section of the expansion nozzle is relatively light on the 150:1 nozzle and almost compensates for the larger overall size of the nozzle. Thus, the difference in area ratio between the 50:1 bell and the 150:1 RAO has little weight effect.

TABLE III-I

ENGINE CHANGES FOR THROTTLING CAPABILITY

SYSTEM REQUIREMENTS \ ENGINE CHANGES	Increase first-stage fuel pump discharge pressure	Adjust pump H-Q slope to system requirement	Utilize Hiperthin primary injector	Utilize transpiration TCA wall cooling	Adjust laminar-turbulent resistance of TCA transpiration system	Adjust turbine pressure ratio	Relocate engine suction valves upstream of boost pumps	Engine mounted integrated boost pump and poppet suction valves	Relocate PC injector to provide self drain through TPA turbine
Throttle range to 10:1	X		X						
Throttle engine at fixed mixture ratio with single valve	X	X			X				
Maintain engine stiffness	X	X	X						
Maintain combustor stability	X		X						
Maintain TCA wall compatibility				X	X				
Maintain turbine temperature under 1250°F						X		X	
Limit pump operation to negative slope portion of H-Q curve		X							
Eliminate check valves from boost pump turbine drive line							X		
Minimize propellant wet volume downstream of engine start-stop valves				X				X	
Provide aft direction self drain of trapped engine propellant									X

Table III-I

TABLE III-II

MATERIAL LIST, ENGINE MODULE ASSEMBLY, 100K ARES

Part	Material Surface Environment (Wall Temp. °F) Fuel	Oxid	Gas	Material (Alternates Shown in Parentheses)
1. Turbopump Housing	200°F	200°F	600°F	INCO 718
2. Turbopump Shaft	77°	600°	1000°	INCO 718 (AM 355)
3. Turbine Nozzle	-	-	1200°	Haynes 25 (713 C)
4. Turbine Rotor	-	600°	1200°	Forged Udimet 700 (Waspalloy)
5. Turbine Shaft Labyrinth	-	500°	-	AM 355
6. Turbine Disc Nut	-	-	1000°	AM 355
7. Turbine Exhaust Flow Distribution Plate	-	-	1200°	Udimet 700 (Waspalloy)
8. Thrust Takeout Plate	77°	-	-	AM 355
9. Fuel Pump, 1st Stage Impeller	77°	-	-	17-4PH Cast, LC-1 Flame Plated
10. Fuel Pump, 1st Stage Backplate	77°	-	-	AM 355, LC-1 Flame Plated Land
11. Fuel Pump, 1st Stage Inducer	77°	-	-	Titanium 6Al-4Va
12. Fuel Pump, 1st Stage Inducer Hsg	77°	-	-	SS 347, LC-1 Flame Plated Land
13. Fuel Pump, 2nd Stage Impeller	100°	-	-	AM 355
14. Fuel Pump, 2nd Stage Backplate & Retaining Nut	100°	-	-	AM 355
15. Fuel Pump Labyrinth Inserts	100°	-	-	Pressure Relieved Kynar
16. Fuel Pump Radial Bearing	200°	-	-	SS 440C Rollers & Races, Glass Filled Teflon Cages
17. Fuel Pump Thrust Bearing Sleeve, Retainers, and Bolt	100°	-	-	AM 355
18. Fuel Pump Thrust Bearings	200°	-	-	SS 440C Races, K5H Balls, Glass Filled Teflon Cages

TABLE III-II (cont.)

Part	Material Surface Environment (Wall Temp. °F) Fuel	Oxid	Gas	Material (Alternates Shown in Parentheses)
19. Fuel Bearing Shaft Retaining Nut	77°	-	-	AM 355
20. Interpropellant Seal	77°	77°	-	Carbon Stationary Ring, LC-1 Flame Plated, 440C Rotating Ring
21. Oxid Pump Impeller	-	200°	-	17-4 PH Cast, LC-1 Flame Plated Land
22. Oxid Pump Impeller Hydrostatic Seal	-	77°	-	LC-1 Flame Plated SS347
23. Oxidizer Pump Inducer	-	77°	-	AM 355
24. Oxidizer Pump Inducer Nut	-	77°	-	AM 355
25. Oxid Pump Radial Bearing	-	200°	-	SS 440C Rollers & Races, Glass Filled Teflon Cages
26. Oxid Pump Radial Bearing Retaining Nut	-	500°	-	AM 355
27. Oxid Pump Inducer Insert	-	77°	-	Graphite Filled Vespo SP-21
28. Fuel Boost Pump Inlet Housing	77°	-	-	SS 347
29. Fuel Boost Pump Discharge Housing	77°	-	-	Al A356 Cast
30. Fuel Boost Pump Impeller	77°	-	-	Al 7075-T73
31. Fuel Boost Pump Impeller Nut	77°	-	-	Al 7075-T6
32. Fuel Boost Pump Shaft	77°	-	-	AM 355
33. Fuel Boost Pump Bearing Housing	77°	-	-	AM 355
34. Fuel Boost Pump Bearing	200°	-	-	SS 440C Rolling Elements & Races, Glass Filled Teflon Cages
35. Fuel Boost Pump Bearing Retaining Nuts	77°	-	-	SS 347
36. Fuel Boost Pump Turbine Rotor	77°	-	-	AM 355
37. Fuel Boost Pump Turbine Stators	77°	-	-	AM 355

TABLE III-II (cont.)

Part	Material Surface Environment (Wall Temp. °F) Fuel	Oxid	Gas	Material (Alternates Shown in Parentheses)
38. Oxidizer Boost Pump		77°	-	Same materials as Fuel Boost Pump (Items 28-37)
39. Fuel Suction Valve Body	77°	-	-	SS-17-4PH
40. Fuel Suction Valve Poppet	77°	-	-	SS-17-4PH (AM 350)
41. Fuel Suction Valve Springs	77°	-	-	SS-17-7PH
42. Fuel Suction Valve Poppet Seal	77°	-	-	Teflon
43. Fuel Suction Valve Static Seals	77°	-	-	Teflon
44. Fuel Suction Valve Shear Seal (Optional, Long Term Storage)	77°	-	-	SS304L
45. Oxid Suction Valve	-	77°	-	Same materials as Fuel Suction Valve (Items 39-44)
46. Primary Fuel Valve Body	100°	-	-	Integral part of primary injector
47. Primary Fuel Valve Shaft	100°	-	-	AM 350 (17-4PH)
48. Primary Fuel Valve Sleeve	100°	-	-	SS-17-4PH (AM 350)
49. Primary Fuel Valve Bearings	100°	-	-	440C
50. Primary Fuel Valve Dyn. Seals	100°	-	-	Teflon
51. Primary Fuel Valve Static Statics	100°	-	-	AS 4004 (Butyl)
52. Secondary Fuel Valve	200°	-	-	Same materials as Primary Fuel Valve except: valve body is integral part of Secondary Injector
53. Primary Fuel Feed Line	100°	-	-	Mil-T-6845 304
54. Secondary Fuel Feed Line	100°	-	-	Mil-T-6845 304
55. Fuel Boost Pump Turbine Feed Line	100°	-	-	Mil-T-6845 304
56. Oxid Boost Pump Turbine Feed Line	100°	-	-	Mil-T-6845 304
57. Primary Injector	200°	200°	1200°	SS 347

TABLE III-II (cont.)

Part	Material Surface Environment (Wall Temp. °F) Fuel	Oxid	Gas	Material (Alternates Shown in Parentheses)
58. Adapter, Turbopump/Combustors	-	-	1200°	INCO 718 (Hast X)
59. Primary Combustor Liner	-	-	1200°	Hast X (René 62, INCO 718)
60. Secondary Injector	600°	-	1200°	SS 347
61. Secondary Combustor Washers	-	1625°	-	SS 347 (Nickel)
62. Secondary Combustor Housing	-	300° Soak-back	-	Maraging Steel - 18% Nickel (Titanium)
63. Nozzle Extension, First Section	-	-	2200°	Columbium (10 HF, 1 Ti)
64. Nozzle Extension, Second Section	-	-	1100°	Titanium (5 Al, 2.5 Sn)

TABLE III-III

THROTTLING PERFORMANCE, 100K ARES (u)

	100% F CASE 1	75% F CASE 2	50% F CASE 3	37.5% F CASE 4	25% F CASE 5	20% F CASE 6	15% F CASE 7	10% F CASE 8
F	[illegible]	[illegible]	[illegible]	[illegible]	27817.05640	22237.34961	16620.88950	11[illegible].00330
PCSC	2799.99997	2100.24261	1401.40048	1051.63223	703.91291	564.23190	424.66772	284.63477
MR-ENG	2.42686	2.43726	2.43379	2.42136	2.40423	2.39706	2.42689	2.57159
IS	316.20216	315.00113	313.52773	312.50895	310.87545	309.82823	307.92838	302.78642
W-ENG	350.94994	264.71243	177.51248	133.46335	89.47974	71.77316	54.20379	36.77511
WOT	248.53823	187.69531	125.83685	94.46991	63.21524	50.68951	38.38612	26.47999
WFT	102.91152	77.91085	51.70402	38.81329	26.29338	21.13405	15.81699	10.29711
NT	29999.98584	24509.11841	18648.90576	15486.41687	12059.48218	10545.11145	8906.09119	7040.03552
TTIT	1183.79366	973.95750	744.58759	619.14153	480.65434	454.86489	421.68653	368.60951
RPT	1.50000	1.40983	1.31917	1.27107	1.22009	1.19819	1.17518	1.14933
PODTM	4959.77515	3479.75107	2150.38809	1547.26973	989.19426	776.96892	572.72816	375.85987
DPOM1	49.97809	28.68552	12.96173	7.31837	3.27855	2.10456	1.20676	.57283
DPORG	49.99976	28.69434	12.96033	7.31377	3.27412	2.10098	1.20535	.57390
DPOM2	50.00647	28.69070	12.95618	7.31091	3.27267	2.10002	1.20479	.57363
DPOJPC	199.51154	155.33307	106.68791	80.85899	54.55013	43.81783	33.31223	23.07445
PCPC	4610.27930	3238.34744	2004.82195	1444.46768	924.81880	726.84553	535.79903	351.06506
PFDTM1	[illegible]	3824.72647	2156.93021	[illegible]	971.16956	757.77448	552.69997	354.54542
DPSCVI	104.06677	62.58630	30.18283	17.83939	8.44511	5.53825	3.1539[illegible]	1.36641
DPFSCV	1655.91580	991.90726	476.87932	281.52615	133.15479	87.29803	49.70358	21.52985
DPSCVO	105.17450	62.98425	30.27496	17.87152	8.45230	5.54134	3.15495	1.36660
DPFJSC	299.86606	243.24866	175.65009	137.29797	95.83567	78.03648	59.12809	39.10709
PCFACE	2885.00000	2164.00000	1443.94301	1083.55679	725.28170	581.36037	437.55942	293.27547
PFDTM2	5555.58765	4007.07770	2493.62054	1789.93076	1134.25877	885.52163	646.18475	416.67546
DPFPCV	499.99921	502.29871	351.85965	256.29875	158.65073	120.55981	83.71251	50.12529
DPPCVO	49.99908	21.64407	6.83258	3.07364	1.02628	.58473	.28181	.09554
DPFJPC	295.30548	198.81027	115.03273	78.34889	46.03835	34.99419	24.47266	14.35952
PCPC	4610.27930	3238.34744	2004.82195	1444.46768	924.81880	726.84553	535.79903	351.06506
PTIT	4485.00000	3150.34891	1950.34311	1405.21597	899.68787	707.09430	521.23928	341.52526
PTET	3039.37921	2260.29251	1494.30356	1115.81560	742.97144	594.21120	446.23633	298.30809
PGJT	3009.07071	2241.31439	1484.33107	1109.41182	739.43971	591.64870	444.48010	297.29919
PCFACE	2885.00000	2164.00000	1443.94301	1083.55679	725.28170	581.36037	437.55942	293.27547
KWFSCV	2.14467	2.14467	2.14467	2.14467	2.14467	2.14467	2.14467	2.14467
KWFPCV	.93048	.61085	.41009	.32227	.23669	.20495	.17075	.12848
KWOPCV	26.07429	26.07429	26.07429	26.07429	26.07429	26.07429	26.07429	26.07429
KWFCV	.42286	.39824	.36165	.33383	.29459	.27342	.24720	.21356
KWRGV								

NOTE: Values less than unity have their decimal location noted by prefix. Example: "-5" indicates decimal point is 5 places to the left of first digit. No prefix and no decimal point indicate decimal precedes first digit.

TABLE III-III (cont.)

	100% F CASE 1	75% F CASE 2	50% F CASE 3	37.5% F CASE 4	25% F CASE 5	20% F CASE 6	15% F CASE 7	10% F CASE 8
F	110971.12091	83384.71387	55655.08546	41700.49219	27817.05640	22237.34961	16690.88550	11135.00330
DP/PSF	.10394	.11241	.12165	.12671	.13214	.13423	.13513	.13335
DP/PPD	.04328	.04797	.05322	.05598	.05898	.06028	.06217	.06573
DP/PPF	.06405	.06139	.05738	.05424	.04978	.04815	.04568	.04090
PCSC	2799.99997	2108.24261	1401.40048	1051.63223	703.91291	564.23190	424.66772	284.63477
MRSC	2.20000	2.20976	2.20674	2.19499	2.17868	2.17208	2.20012	2.33529
AE/AT	50.00000	50.00000	50.00000	50.00000	50.00000	50.00000	50.00000	50.00000
ETAC	.96247	.96052	.95864	.95766	.95671	.95632	.95587	.95550
ETAN	.95104	.94986	.94715	.94449	.93975	.93665	.93221	.92532
C*SC	5480.44446	5458.01959	5422.95862	5412.58582	5403.77332	5400.05927	5381.73749	5316.63899
CF	1.85633	1.85960	1.86014	1.85765	1.85095	1.84598	1.84091	1.83233
WGJSC	245.07470	183.16362	121.37972	90.52572	60.11693	48.04106	36.28007	24.90782
WFJSC	82.64199	64.01555	44.40720	34.12257	23.46671	19.00056	14.33594	9.43479
WOFC	23.23307	17.52699	11.75395	8.83691	5.92497	4.75195	3.58711	2.43449
WFC/WT	.06620	.06621	.06621	.06621	.06622	.06621	.06618	.06620
WORG	223.39591	168.64908	112.96678	84.72823	56.60737	45.31943	34.31001	23.66387
DPFJSC	299.86606	243.24866	175.65009	137.29797	95.83567	78.03648	59.12809	39.10709
DPOFC	2109.79709	1350.82294	736.02588	488.31912	282.00280	210.63245	146.85368	90.65226
DPORG	49.99976	28.69434	12.96033	7.31377	3.27412	2.10098	1.20535	.57390
DTORG	.00000	.00000	.00000	.00000	.00000	.00000	.00000	.00000
D*FJSC	55.81637	55.94488	56.03026	56.05598	56.07095	56.07546	56.07439	56.07640
D*OFC	89.28149	89.4783.	89.55243	89.54214	89.51030	89.48876	89.47041	89.45314
D*ORG	91.60972	90.97688	90.37414	90.08944	89.82781	89.72341	89.63647	89.55587
MRPC	11.30001	12.97770	15.48165	17.31721	20.02618	21.24187	23.16590	27.44196
WOJPC	223.39591	168.64908	112.96678	84.72823	56.60737	45.31943	34.31001	23.66387
WFJPC	19.76953	12.99530	7.29682	4.89272	2.82667	2.13349	1.48106	.86232
D*OJPC	91.32734	90.76811	90.23810	89.98908	89.76192	89.67107	89.59711	89.52897
D*FJPC	56.22080	56.14999	56.10677	56.08906	56.07829	56.07482	56.07325	56.073
POT	37.14000	37.14000	37.14000	37.14000	37.14000	37.14000	37.14000	37.14000
PFT	17.51000	17.51000	17.51000	17.51000	17.51000	17.51000	17.51000	17.51000
NPSPOB	12.32524	15.42207	17.68499	18.49127	19.06631	19.23313	19.36065	19.48076
NPSPFB	7.87835	10.85374	12.99186	13.75348	14.30894	14.47480	14.60986	14.71156
NPSPOM	140.32589	114.89201	84.69921	68.70476	52.43550	45.69152	38.86765	31.96481
NPSPFM	79.38197	65.47814	49.30939	40.76928	32.21791	28.70059	25.14813	21.56553

TABLE III-III (cont.)

	100% F CASE 1	75% F CASE 2	50% F CASE 3	37.5% F CASE 4	25% F CASE 5	20% F CASE 6	15% F CASE 7	10% F CASE 8
F	[illegible]	83384.71387	55695.08645	41700.49219	27817.05640	22237.34961	16690.88550	11135.00338
ETAT	.75251	.75483	.75544	.75308	.74457	.73672	.72401	.70485
WT1	243.16545	181.64438	120.26360	89.62095	59.43403	47.45292	35.79107	24.52620
U/C-GT	.57084	.55468	.52786	.50711	.47545	.45675	.43349	.40610
SHPT	[illegible]	5187.92456	2196.07315	1219.26901	551.34734	360.87043	211.82208	100.61366
SHPOM	5605.78493	2974.89731	1257.41791	698.36266	315.55230	205.97629	120.54671	57.47976
SHPFM1	4034.01907	2138.83929	905.73206	504.49001	228.96583	149.84857	87.67490	41.47088
SHPFM2	150.06828	83.41859	33.97315	18.42054	8.18700	5.36030	3.17991	1.55791
POSTM	159.19666	133.45985	103.01003	86.90087	70.51531	63.72723	56.84384	49.86876
PODTM	4959.77515	3479.75107	2150.38809	1547.26973	989.19426	776.96892	572.72816	375.85987
HOMNC	7735.18115	5389.84479	3296.18570	2351.11426	1478.92296	1148.21532	830.55935	524.73406
QOSM	1340.56190	1035.63263	704.24910	535.33562	365.67800	296.86575	228.85861	161.65018
HOM/M2	-5 85946536	-5 89726530	-5 94777436	-5 98007580	-4 10169234	-4 10325735	-4 10471198	-4 10587405
Q/QOM	1.00863	.93976	.83987	.76870	.67439	.62611	.57150	.51067
ETAOM	.67970	.67959	.66895	.65306	.62107	.59969	.57136	.53483
NSO	1341.60854	1253.85834	1137.64780	1061.36525	966.98335	921.11479	870.84895	816.41048
SOM	18978.19727	15720.36536	12400.46875	10506.10535	8280.41516	7233.66083	6056.24298	4659.19165
D*QSM	89.36878	89.40164	89.42406	89.43247	89.44107	89.44396	89.44948	89.45718
PFSTM1	82.21128	68.28024	52.08643	43.53434	34.97104	31.44855	27.89168	24.30368
PFDTM1	5050.02313	3524.72647	2156.93021	1538.09183	971.16956	757.77448	552.69997	356.64542
HFNNC1	12761.85132	8882.82642	5404.46552	3837.92584	2403.03937	1862.58856	1347.71507	853.08259
QFSM1	877.34677	665.91604	454.53913	348.09841	240.85467	197.11771	151.86007	104.55882
HF1/M2	-4 14179848	-4 14787535	-4 15539822	-4 15998619	-4 16523558	-4 16749991	-4 16991190	-4 17212397
Q/QDF1	.98357	.91379	.81974	.75588	.67171	.62868	.57347	.49951
ETAFM1	.63030	.62816	.61613	.60163	.57433	.55670	.53040	.48873
NSF-1	740.06779	691.23248	630.77505	592.63282	545.30013	522.18737	493.41282	456.04945
SFM1	16467.05493	13543.36230	10533.09265	8829.72058	6823.33093	5886.67365	4818.50684	3546.73975
D*FSM1	56.05492	56.06536	56.07446	56.07868	56.08291	56.08478	56.08627	56.08826
PFSTM2	4708.27094	3329.44113	2067.30972	1486.21825	946.87284	741.72217	543.36437	352.37083
PFDTM2	5555.58765	4007.07770	2493.62054	1789.93076	1134.25877	885.52163	646.18475	416.67546
HFM2	2160.14523	1731.12361	1091.27489	778.19993	480.56744	368.90047	263.86979	165.06884
QFSM2	166.84950	113.33755	68.16526	49.04911	32.58487	27.05426	21.84439	16.89987
HF2/M2	-5 24001636	-5 28815587	-5 31378158	-5 32439722	-5 33044335	-5 33174688	-5 33267134	-5 33305457
Q/QDF2	.99888	.83033	.65605	.56827	.48481	.46030	.44008	.43071
ETAFM2	.55012	.53749	.49916	.47183	.43508	.42274	.41204	.40693
NSF-2	1222.98569	972.22910	810.93182	736.21435	670.68864	651.60906	635.79173	628.44570
NT	29999.98584	24509.11841	18648.90576	15488.41687	12059.48218	10545.11145	8906.09119	7040.03552

TABLE III-III (cont.)

	100% F CASE 1	75% F CASE 2	50% F CASE 3	37.5% F CASE 4	25% F CASE 5	20% F CASE 6	15% F CASE 7	10% F CASE 8
F	110971.12891	83304.71387	55655.08545	41708.49219	27817.05640	22237.34961	16690.88550	11135.00330
NTOB	7999.99622	6606.78082	5129.81055	4333.90674	3464.16617	3069.87723	2620.72546	2085.57736
WOSB	248.53823	187.69531	125.83685	94.46991	63.21524	50.65951	38.38612	26.47999
TOSB	77.00000	77.00000	77.00000	77.00000	77.00000	77.00000	77.00000	77.00000
POSTB	29.95064	33.03974	35.29702	36.10130	36.67490	36.84131	36.96850	37.05839
PODTB	162.05130	135.11408	103.77498	87.34287	70.72154	63.86314	56.92462	49.90906
HOBNC	215.56066	164.39586	110.17898	82.44530	54.77907	43.47647	32.10810	20.67584
QOSB	1246.41046	941.24828	631.02435	473.72612	316.99501	254.03334	192.48779	132.78419
HOB/N2	-5 33682635	-5 37662668	-5 41869317	-5 43894164	-5 45647522	-5 46133058	-5 46748921	-5 47534759
Q/QDOB	1.00632	.92019	.79453	.70601	.59104	.53448	.47440	.41123
ETAOB	.64094	.64223	.60417	.56351	.50201	.46670	.42450	.37561
SHPOB	149.86251	87.27235	41.72391	25.13035	12.54173	8.58052	5.27890	2.65022
SOB	30054.04590	18231.38970	10459.76831	7404.96908	4731.86090	3729.37924	2757.66458	1816.37572
PTITOB	4760.66858	3[illegible].20706	2065.80109	1487.00906	951.33641	747.59368	551.49314	362.44847
DPTOB	4648.37262	3234.47021	1974.78105	1406.85489	883.83533	685.79875	495.75599	313.10450
TTITOB	92.61465	88.08217	84.35461	82.76491	81.23660	80.70773	80.01860	79.30638
WTOB	22.38617	18.60429	14.48582	12.20654	9.66051	8.50459	7.22726	5.74097
ETATOB	.50453	.50411	.50367	.50364	.50396	.50418	.50430	.50433
NTFB	7999.99622	6595.86176	5112.74512	4311.61426	3442.14606	3049.89435	2604.01895	2074.04327
WFSB	102.41152	77.01085	51.70402	39.01529	26.29338	21.13405	15.81699	10.29711
TFSB	77.00000	77.00000	77.00000	77.00000	77.00000	77.00000	77.00000	77.00000
PFSTB	10.59303	13.56751	15.70499	16.46638	17.02167	17.18748	17.32250	17.42417
PFDTB	84.78544	69.76341	52.77752	43.93968	35.16510	31.57853	27.96863	24.34026
HFBNC	191.50767	144.25056	95.16113	70.52063	46.57184	36.93994	27.32770	17.75265
QFSB	819.33191	616.10563	413.63949	312.12641	210.34907	169.07392	126.53695	82.37749
HFB/N2	-5 29923100	-5 33156937	-5 36404183	-5 37934677	-5 39306539	-5 39712438	-5 40300898	-5 41269340
Q/QDFB	.98477	.89815	.77792	.69608	.58759	.53304	.46724	.38191
ETAFB	.64651	.63814	.59723	.55844	.49999	.46574	.41918	.35156
SHPFB	54.85158	31.65142	14.97899	8.95796	4.45289	3.04769	1.87483	.94540
SFB	24012.64380	13501.03625	7493.21548	5259.61401	3346.21109	2635.25897	1932.98317	1235.77107
PTITFB	4900.03033	3420.51047	2093.56537	1493.13864	943.03803	735.95866	536.94444	346.67346
DPTFB	4855.95502	3373.95071	2051.41129	1455.34123	910.74702	706.27833	510.07912	322.83834
TTITFB	92.54557	88.07590	84.21469	82.50410	80.90839	80.24703	79.72275	79.05420
WTFB	5.91870	4.92727	3.83750	3.23048	2.55428	2.24898	1.91087	1.52001
ETATFB	.41220	.41017	.40896	.40907	.41054	.41154	.41227	.41244
SEALS/ WOTS	1.90925	1.51924	1.11612	.90477	.68290	.58813	.48900	.38163
WOBOS	.00000	.00000	.00000	.00000	.00000	.00000	.00000	.00000
WFBOS	.00000	.00000	.00000	.00000	.00000	.00000	.00000	.00000
WFRTS	1.25000	1.25000	1.25000	1.25000	1.25000	1.25000	1.25000	1.25000

CONFIDENTIAL

TABLE III-IV

SYMBOL LIST FOR THROTTLING COMPUTER STUDY

AE/AT	-	Area Exit/Area Throat
CF	-	Nozzle Coefficient
C*SC	-	Throat Velocity--Secondary Combustor
D*FJPC	-	Density Fuel Injector Primary Combustor
D*FJSC	-	Density Fuel Injector Secondary Combustor
$D*FSM_1$	-	Density Fuel Suction Main Pump First Stage
$D*FSM_2$	-	Density Fuel Suction Main Pump Second Stage
D*OFC	-	Density Oxidizer Transpiration or Film Cooling
D*OJPC	-	Density Oxidizer Injector Primary Combustor
D*ORG	-	Density Oxidizer Regenerative Coolant Exit
D*OSM	-	Density Oxidizer Suction Main Pump
DPFJPC	-	ΔP Fuel Injector Primary Combustor
DPFJSC	-	ΔP Fuel Injector Secondary Combustor
DPFPCV	-	ΔP Fuel Primary Combustor Valve
DPFPCP	-	ΔP Fuel Primary Combustor Pilot System
DPFSC	-	ΔP Fuel Secondary Combustor Valve
DPFSCP	-	ΔP Fuel Secondary Combustor Pilot System
DPOFC	-	ΔP Oxidizer Transpiration or Film Coolant System
$DPOH_1$	-	ΔP Oxidizer Housing First Passage
$DPOH_2$	-	ΔP Oxidizer Housing Second Passage
DPOJPC	-	ΔP Oxidizer Injector Primary Combustor
DPOPCP	-	ΔP Oxidizer Primary Combustor Pilot System
DPORG	-	ΔP Oxidizer Regenerative Coolant Coolant Circuit (or Oxidizer Housing Orifice)
DPPCVO	-	ΔP Primary Combustor Valve Outlet
DPSCVI	-	ΔP Secondary Combustor Valve Inlet
DPSCVO	-	ΔP Secondary Combustor Valve Outlet
DPTOB	-	ΔP Turbine Oxidizer Boost Pump

Table III-IV
Sheet 1 of 6

TABLE III-IV (cont.)

DP/PPF	-	ΔP Fuel Injector ÷ Pressure Primary Combustor
DP/PPO	-	ΔP Oxidizer Injector ÷ Pressure Primary Combustor
DP/PSF	-	ΔP Fuel Injector ÷ Pressure Secondary Combustor
DTORG	-	Temperature Regenerative Coolant Circuit
ETAC	-	Efficiency Secondary Combustor Combustion
ETAFB	-	Efficiency Fuel Boost Pump
$ETAFM_1$	-	Efficiency Fuel Main Pump First Stage
$ETAFM_2$	-	Efficiency Fuel Main Pump Second Stage
ETAN	-	Efficiency Secondary Combustor Nozzle
ETAOB	-	Efficiency Oxidizer Boost Pump
ETAOM	-	Efficiency Oxidizer Main Pump
ETAT	-	Efficiency Turbine
ETATFB	-	Efficiency Turbine Fuel Boost
ETATOB	-	Efficiency Turbine Oxidizer Boost Pump
F	-	Thrust
HFBNC	-	Head Fuel Boost Pump, Noncavitating
HFB/N2	-	Head Fuel Boost Pump ÷ $(Speed)^2$
HFM_2	-	Head Fuel Main Pump Second Stage
$HF_2/N2$	-	Head Fuel Main Pump Second Stage ÷ $(Speed)^2$
$HFMNC_1$	-	Head Fuel Main Pump First Stage, Noncavitating
$HF_1/N2$	-	Head Fuel Main Pump First Stage, Noncavitating ÷ $(Speed)^2$
HOBNC	-	Head Oxidizer Boost Pump, Noncavitating
HOB/N2	-	Head Oxidizer Boost Pump, Noncavitating
HOMNC	-	Head Oxidizer Main Pump, Noncavitating
HOM/N2	-	Head Oxidizer Main Pump, Noncavitating ÷ $(Speed)^2$
I_s	-	Specific Impulse

Table III-IV
Sheet 2 of 6

TABLE III-IV (cont.)

KwFCV	-	Film Coolant Valve Flow Admittance Factor
KwFPCV	-	Fuel Primary Combustor Valve Flow Admittance Factor
KwFSCV	-	Fuel Secondary Combustor Valve Flow Admittance Factor
KwOPCV	-	Oxidizer Primary Combustor Valve Flow Admittance Factor
KwRGV	-	Regenerative Coolant Valve Flow Admittance Factor
NT	-	Turbine Speed
NTFB	-	Turbine Speed Fuel Boost Pump
NTOB	-	Turbine Speed Oxidizer Boost Pump
MRENG	-	Engine Mixture Ratio
MRPC	-	Primary Combustor Mixture Ratio
MRSC	-	Secondary Combustor Mixture Ratio
NPSPFB	-	Net Positive Suction Pressure Fuel Boost Pump
NPSPFM	-	Net Positive Suction Pressure Fuel Main Pump
NPSPOB	-	Net Positive Suction Pressure Oxidizer Boost Pump
NPSPOM	-	Net Positive Suction Pressure Oxidizer Main Pump
NSF-1	-	Specific Speed Fuel Pump First Stage
NSF-2	-	Specific Speed Fuel Pump Second Stage
NSO	-	Specific Speed Oxidizer Pump
PA	-	Ambient Pressure
PCFACE	-	Primary Combustor Injector Face Pressure
PCPC	-	Primary Combustor Chamber Pressure
PCSC	-	Secondary Combustor Chamber Pressure
PFDTB	-	Pressure Fuel Discharge (total) Boost Pump
$PFDTM_1$	-	Pressure Fuel Discharge (total) Main Pump First Stage
$PFDTM_2$	-	Pressure Fuel Discharge (total) Main Pump Second Stage
PFSTB	-	Pressure Fuel Suction (total) Fuel Boost Pump
$PFSTM_1$	-	Pressure Fuel Suction (total) Fuel Main Pump First Stage
$PFSTM_2$	-	Pressure Fuel Suction (total) Fuel Main Pump Second Stage

Table III-IV
Sheet 3 of 6

TABLE III-IV (cont.)

PFT	-	Pressure Fuel Tank (Bottom)
PGJT	-	Pressure Gas Injector Total (Inlet)
PODTM	-	Pressure Oxidizer Discharge (Total) Main Pump
PODTB	-	Pressure Oxidizer Discharge (Total) Boost Pump
PORGDT	-	Pressure Oxidizer Regen. Coolant Discharge Total
POSTB	-	Pressure Oxidizer Suction (Total) Boost Pump
POSTM	-	Pressure Oxidizer Suction (Total) Main Pump
POT	-	Pressure Oxidizer Tank (Bottom)
PTET	-	Pressure Turbine Exit Total
PTIT	-	Pressure Turbine Inlet (Total)
PTITFB	-	Pressure Turbine Inlet (Total) Fuel Boost Pump
PTITOB	-	Pressure Turbine Inlet (Total) Oxidizer Boost Pump
QFSB	-	Volume Flow Fuel Suction Boost Pump
$QFSM_1$	-	Volume Flow Fuel Suction Main Pump First Stage
$QFSM_2$	-	Volume Flow Fuel Suction Main Pump Second Stage
QOSB	-	Volume Flow Oxidizer Boost Pump
QOSM	-	Volume Flow Oxidizer Main Pump
Q/QDF_1	-	Flow Parameter Ratio Fuel Pump First Stage*
Q/QDF_2	-	Flow Parameter Ratio Fuel Pump Second Stage*
Q/QDFB	-	Flow Parameter Ratio Fuel Boost Pump*
Q/QDOB	-	Flow Parameter Oxidizer Boost Pump*
Q/QDOM	-	Flow Parameter Oxidizer Main Pump*
RPT	-	Pressure Ratio Turbine
SFB	-	Suction Specific Speed Fuel Boost Pump
SFM_1	-	Suction Specific Speed Fuel Main Pump First Stage
SHPFB	-	Shaft Horsepower Fuel Boost Pump

*Q/QD represents (Q/N) Actual/(Q/N)Design

Table III-IV
Sheet 4 of 6

TABLE III-IV (cont.)

$SHPFM_1$	-	Shaft Horsepower Fuel Main Pump First Stage
$SHPFM_2$	-	Shaft Horsepower Fuel Main Pump Second Stage
SHPOB	-	Shaft Horsepower Oxidizer Boost Pump
SHPOM	-	Shaft Horsepower Oxidizer Main Pump
SHPT	-	Shaft Horsepower Turbine
SOB	-	Suction Specific Speed Oxidizer Boost Pump
SOM	-	Suction Specific Speed Oxidizer Main Pump
TFSB	-	Temperature Fuel Suction Boost Pump
TOSB	-	Temperature Oxidizer Suction Boost Pump
TTIT	-	Temperature Turbine Inlet (Total)
TTITFB	-	Temperature Turbine Inlet (Total) Fuel Boost Pump
TTITOB	-	Temperature Turbine Inlet (Total) Oxidizer Boost Pump
U/C-GT	-	Tip Velocity ÷ Spouting Velocity Gas Turbine
W-ENG	-	Weight Flow Total Engine
WFBOS	-	Weight Flow Fuel Burn-Off Seal
WFC/WT	-	Ratio Weight Flow Film Coolant*/Weight Flow Total Engine Propellant
WFJPC	-	Weight Fuel Primary Combustor
WFJSC	-	Weight Flow Fuel Secondary Combustor
WFPCP	-	Weight Flow Fuel Primary Combustor Pilot
WFRTS	-	Weight Flow Fuel Pump Return to Suction
WFSB	-	Weight Flow Fuel Suction Boost Pump
WFT	-	Weight Flow Fuel Total (Engine)
WFSCP	-	Weight Flow Fuel Secondary Combustor Pilot
WGJSC	-	Weight Flow Gas Injector Secondary Combustor
WOBOS	-	Weight Flow Oxidizer Burn-Off Seal
WOFC	-	Weight Flow Oxidizer Transpiration or Film Coolant

*Film Coolant and/or Transpiration Coolant

Table III-IV
Sheet 5 of 6

TABLE III-IV (cont.)

WOJPC	-	Weight Flow Oxidizer Injector Primary Combustor
WOPCP	-	Weight Flow Oxidizer Primary Combustor Pilot
WORG	-	Weight Flow Oxidizer Regenerative Coolant
WOSB	-	Weight Flow Oxidizer Suction Boost Pump
WOT	-	Weight Flow Oxidizer Total (Engine)
WOTS	-	Weight Flow Oxidizer Turbine Seal
WTFB	-	Weight Flow Turbine Fuel Boost Pump
WTOB	-	Weight Flow Turbine Oxidizer Boost Pump
WTI	-	Weight Flow Turbine Inlet

Table III-IV
Sheet 6 of 6

TABLE III-V

100K ARES WEIGHT AND INERTIA SUMMARY

COMPONENT ASSEMBLY	Weight Pound	Moment of Inertia About Gimbal Slug Ft^2
TURBOPUMP - INCL. PRIM. COMB & PCFCV HSG ADAPTER & LINE (W/O GIMBAL)	337.1	17.75
SECONDARY INJECT. SUB-ASS'Y & SCFCV	85.6	10.04
TPA SUB-TOTAL	422.7	27.79
ϵ = 150 THRUST CHAMBER ASSEMBLY AND NOZZLE EXTENSION	345.9	211.37
ϵ = 50 THRUST CHAMBER ASSEMBLY AND NOZZLE EXTENSION	332.2	137.64
SUB-TOTAL BASIC ENGINE ϵ = 150	768.6	239.16
SUB-TOTAL BASIC ENGINE ϵ = 50	754.9	165.43
BOOST PUMPS (2)	36.0	1.705
PROPELLANT INLET HOUSINGS (2)	62.0	4.030
SUCTION VALVES & ACTUATORS (2)	40.0	4.280
GIMBAL	19.5	.001
PCFCV ACTUATOR	4.0	.301
SCFCV ACTUATOR	3.0	.399
ADDITIONAL ITEMS SUB-TOTAL	164.5	10.716
GRAND TOTAL -		
ϵ = 150 DRY ENGINE ASSEMBLY	993.1	249.876
ϵ = 50 DRY ENGINE ASSEMBLY	919.4	176.146
ϵ = 150 WET ENGINE ASSEMBLY	996.1	254.236
ϵ = 50 WET ENGINE ASSEMBLY	983.4	180.376

Table III-V

TABLE III-VI

100K PROTOTYPE PRODUCTION ARES WEIGHT AND INERTIA SUMMARY

	Nozzle Expansion Ratio ϵ	Weight Pound	Moment of Inertia About Gimbal Slug Ft^2
DRY ENGINE	150:1	883.	246.
	50:1	869.	172.
ADDITIVE EFFECT OF PROPELLANTS	150:1	63.	4.36
	50:1	64.	4.23
WET ENGINE	150:1	946.	250.36
	50:1	933.	176.23

Table III-VI

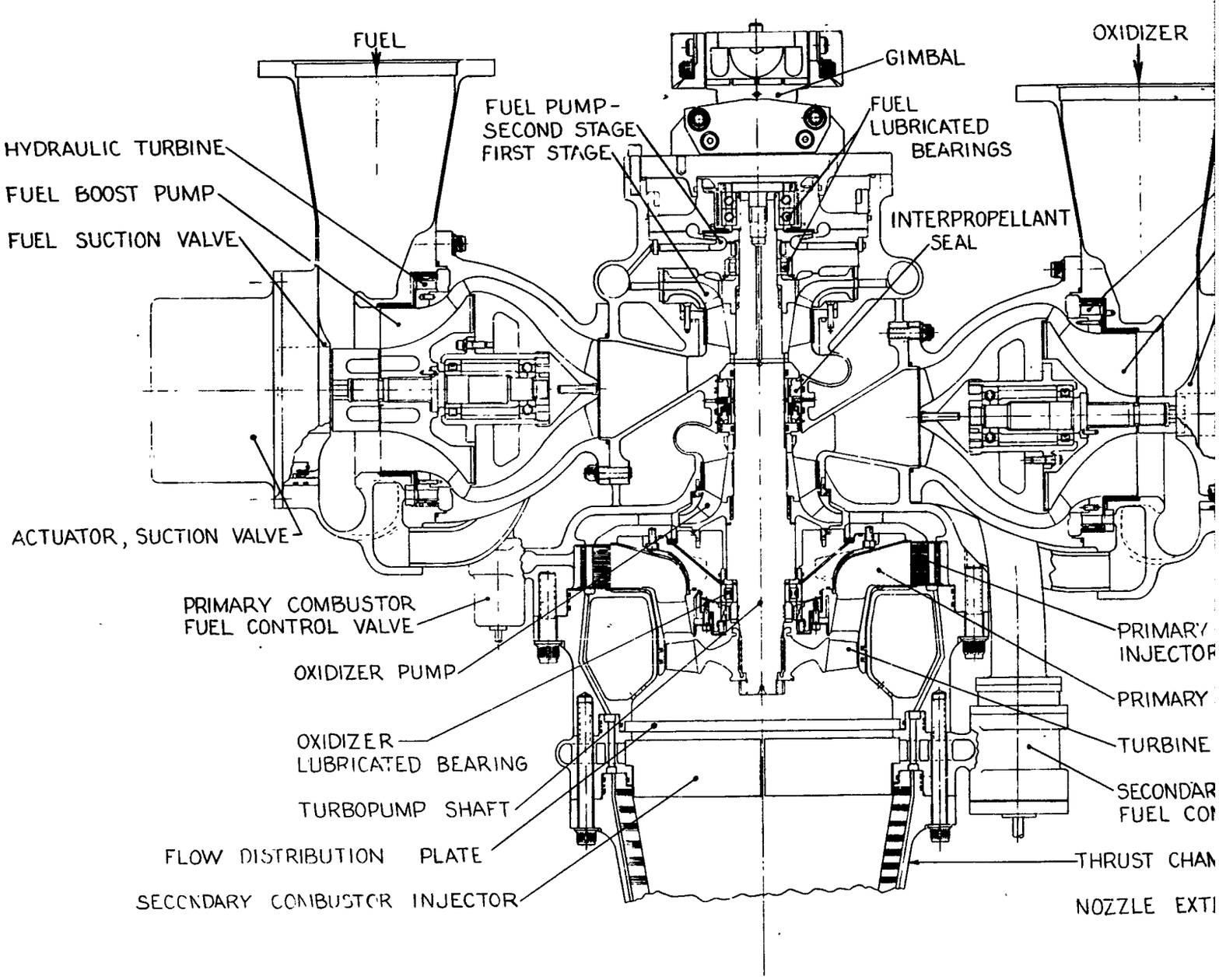
FUEL
OXIDIZER
GIMBAL
FUEL PUMP-
SECOND STAGE
FIRST STAGE
FUEL
LUBRICATED
BEARINGS
HYDRAULIC TURBINE
FUEL BOOST PUMP
FUEL SUCTION VALVE
INTERPROPELLANT
SEAL
ACTUATOR, SUCTION VALVE
PRIMARY COMBUSTOR
FUEL CONTROL VALVE
OXIDIZER PUMP
OXIDIZER
LUBRICATED BEARING
TURBOPUMP SHAFT
FLOW DISTRIBUTION PLATE
SECONDARY COMBUSTOR INJECTOR
PRIMARY
INJECTOR
PRIMARY
TURBINE
SECONDAR
FUEL CON
THRUST CHAM
NOZZLE EXTI

1

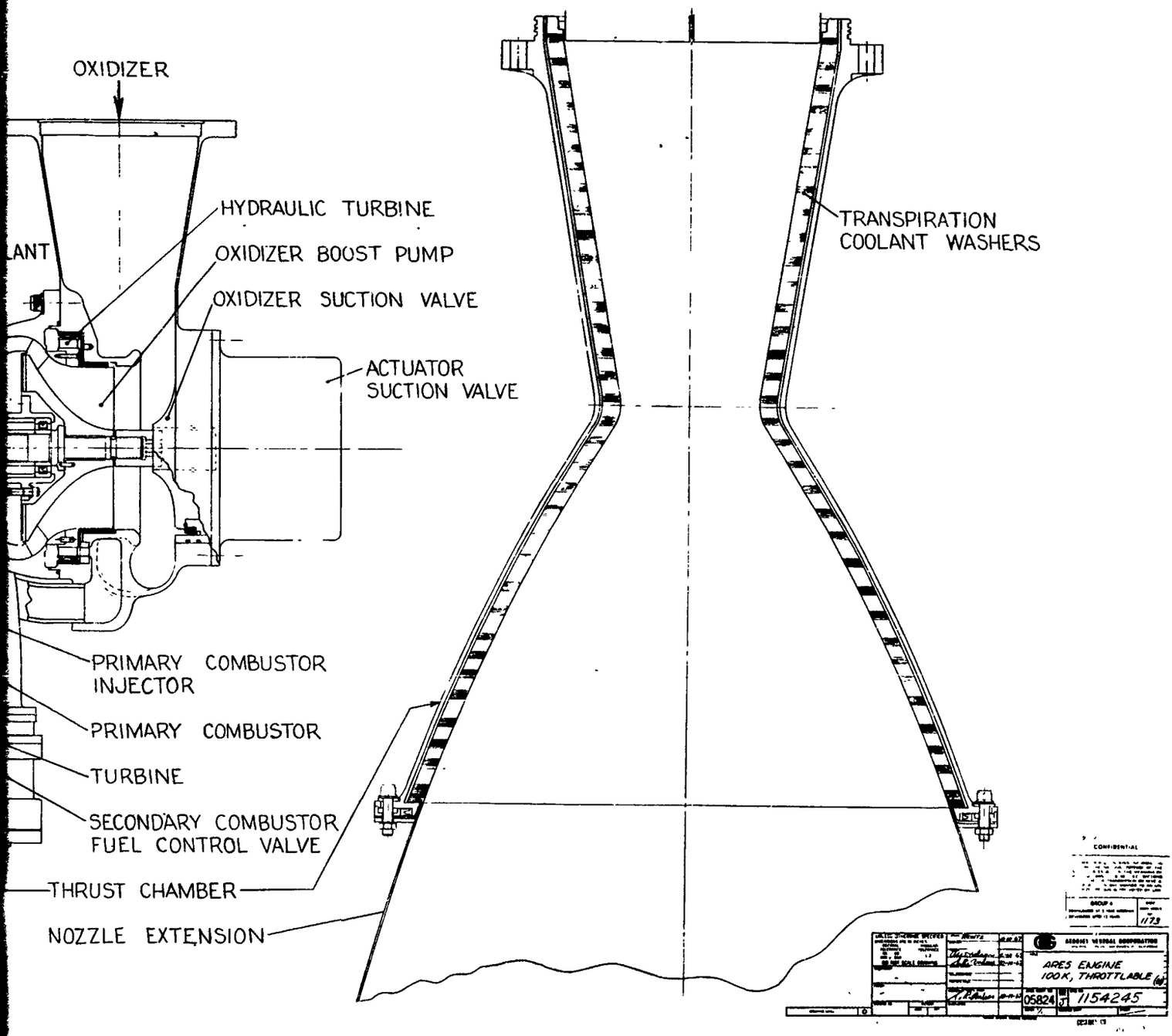

ARES Engine, 100K, Throttlable (u)

Figure III-1

HIPERTHIN INJECTOR
IR&D PROGRAM 8709-53

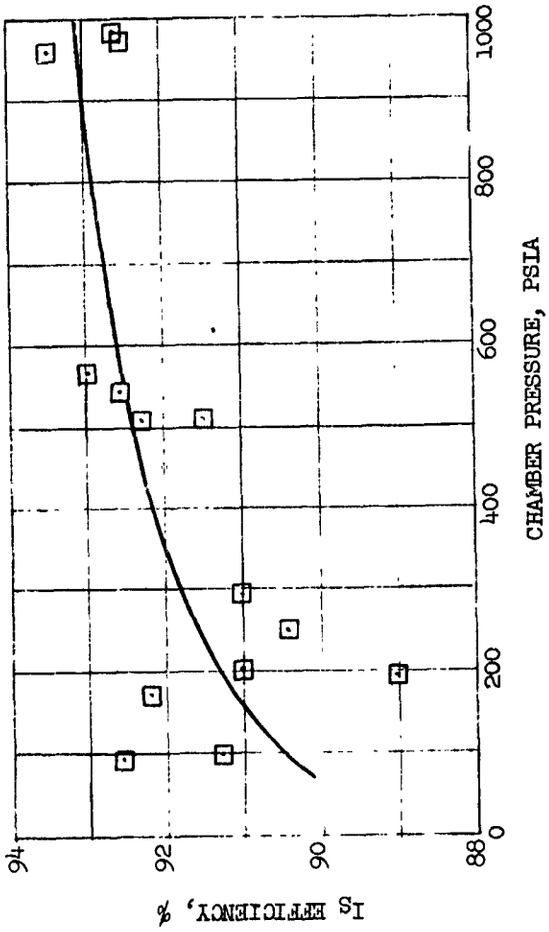

PROPELLANTS: N_2O_4/A-50

MAXIMUM THRUST: 1000 LBS

THROTTLE RANGE: 10:1

CHAMBER L*: 15 IN.

MIXTURE RATIO: 2.0

NUMBER OF TESTS: 15

STEADY STATE DURATION (MAX): 2.4 SEC

NOTE: TESTS WERE CONDUCTED WITH VARIOUS INJECTORS AND CHAMBERS, AND A SHORT NOZZLE (ϵ = 1.4:1). DATA SHOWN IS CORRECTED TO AN ASSUMED TYPICAL NOZZLE EFFICIENCY OF 96%.

HIPERTHIN Injector Throttling Characteristics

Figure III-2

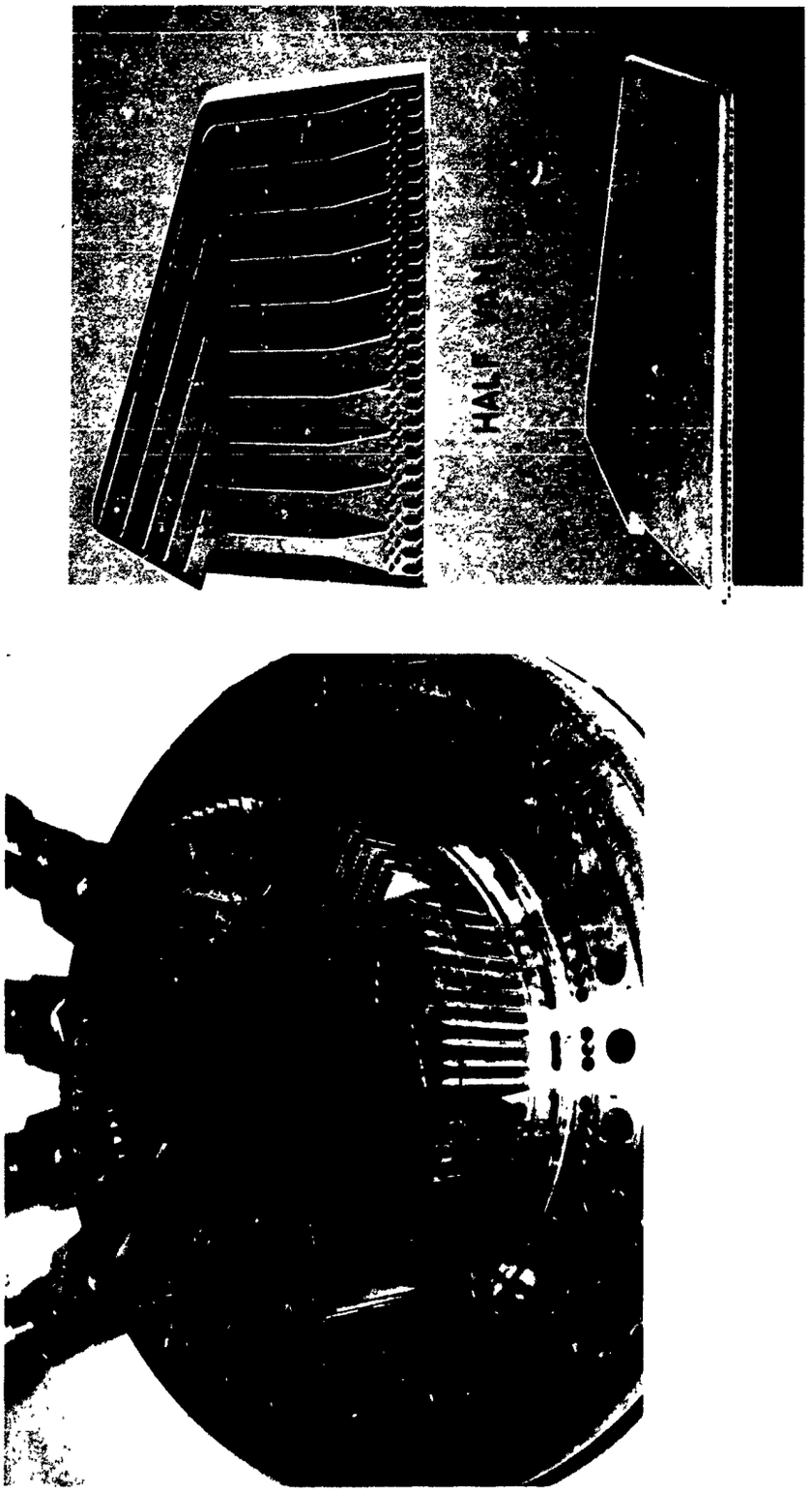

Secondary Combustor Injector (u)

Figure III-3

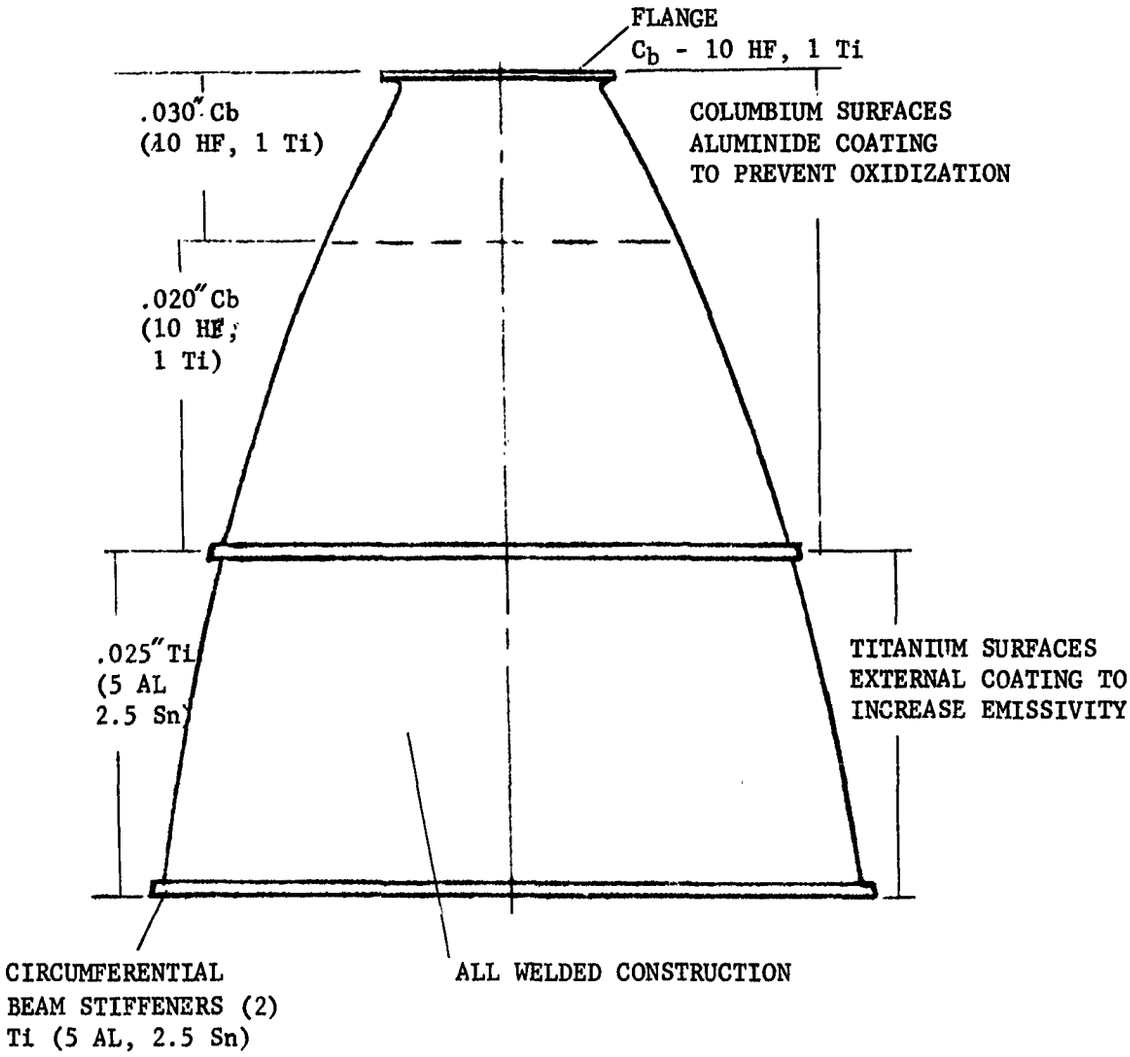

Apollo Nozzle Extension

Figure III-4

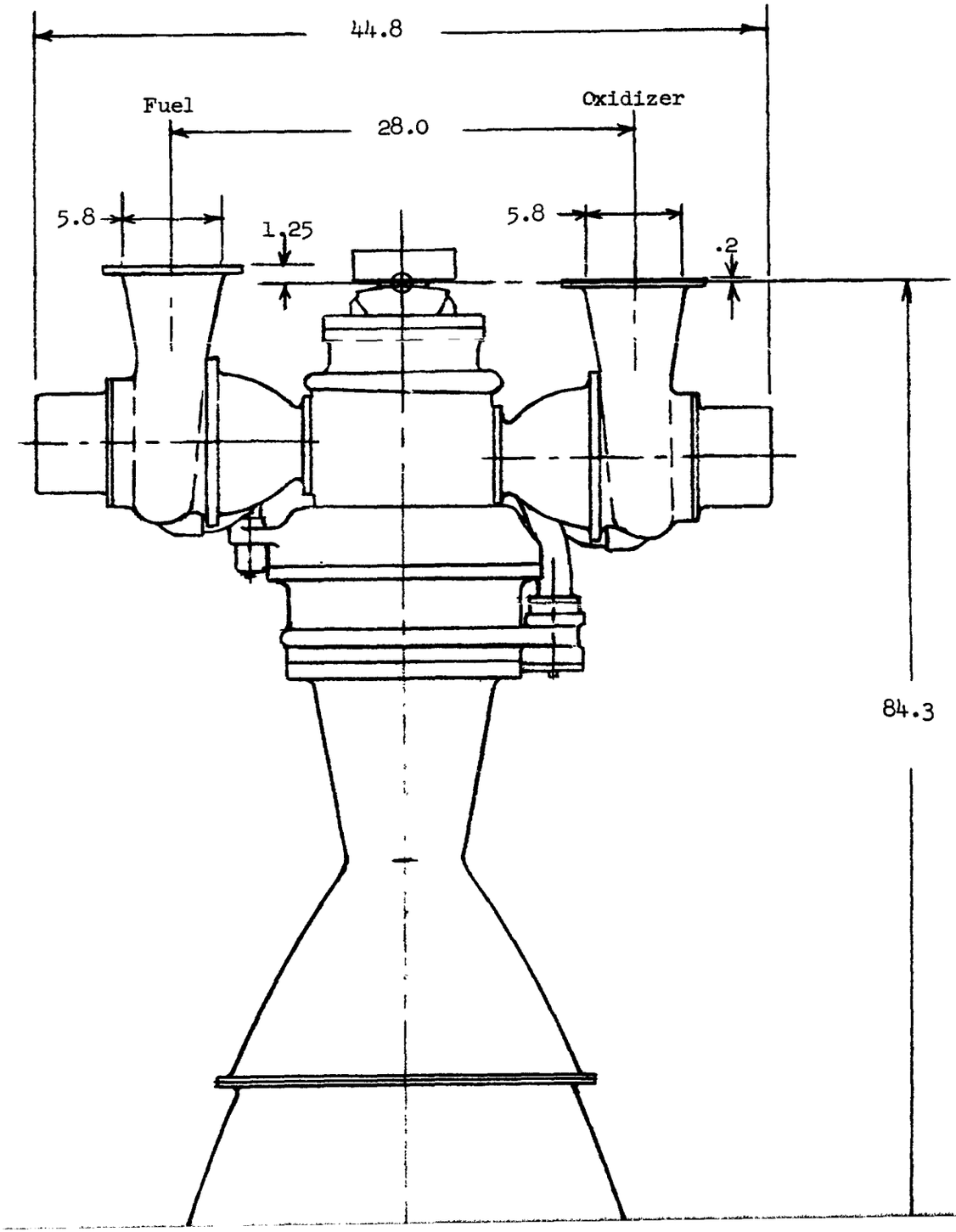
44.8
Fuel
Oxidizer
28.0
5.8
1.25
5.8
.2
84.3

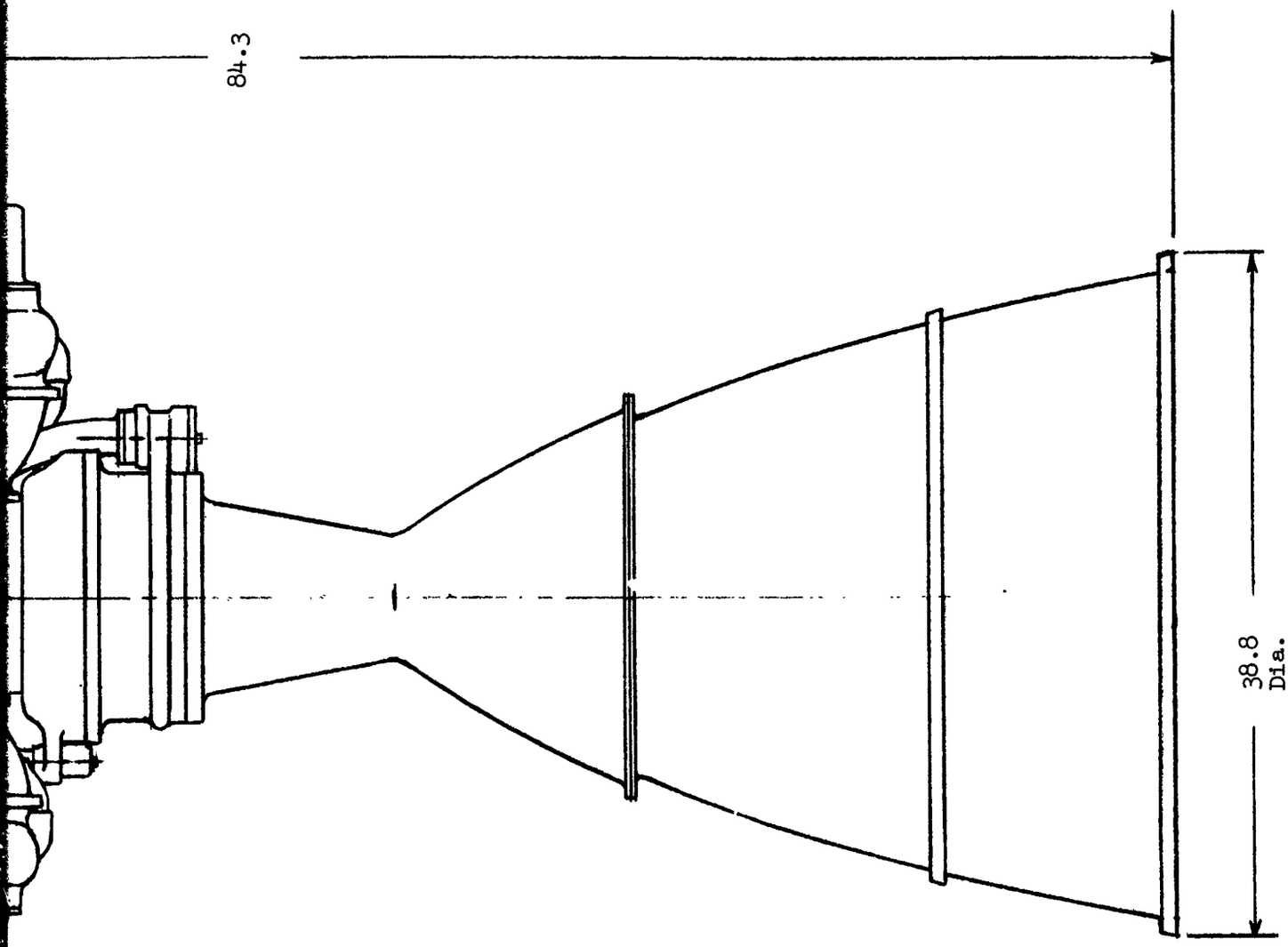

Envelope 100K Throttlable ARES

Figure III-5

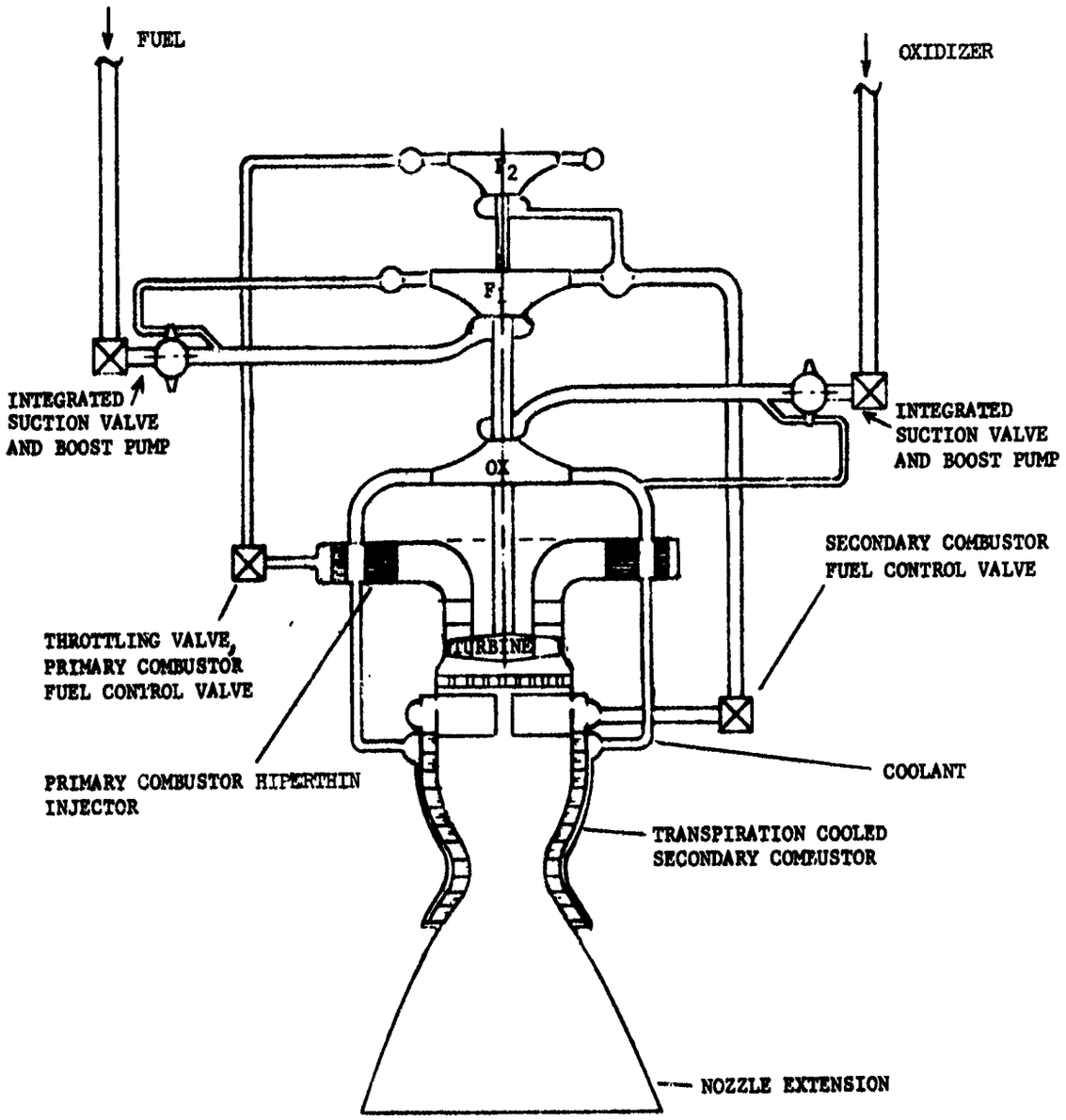

ARES Throttlable Engine Schematic

Figure III-6

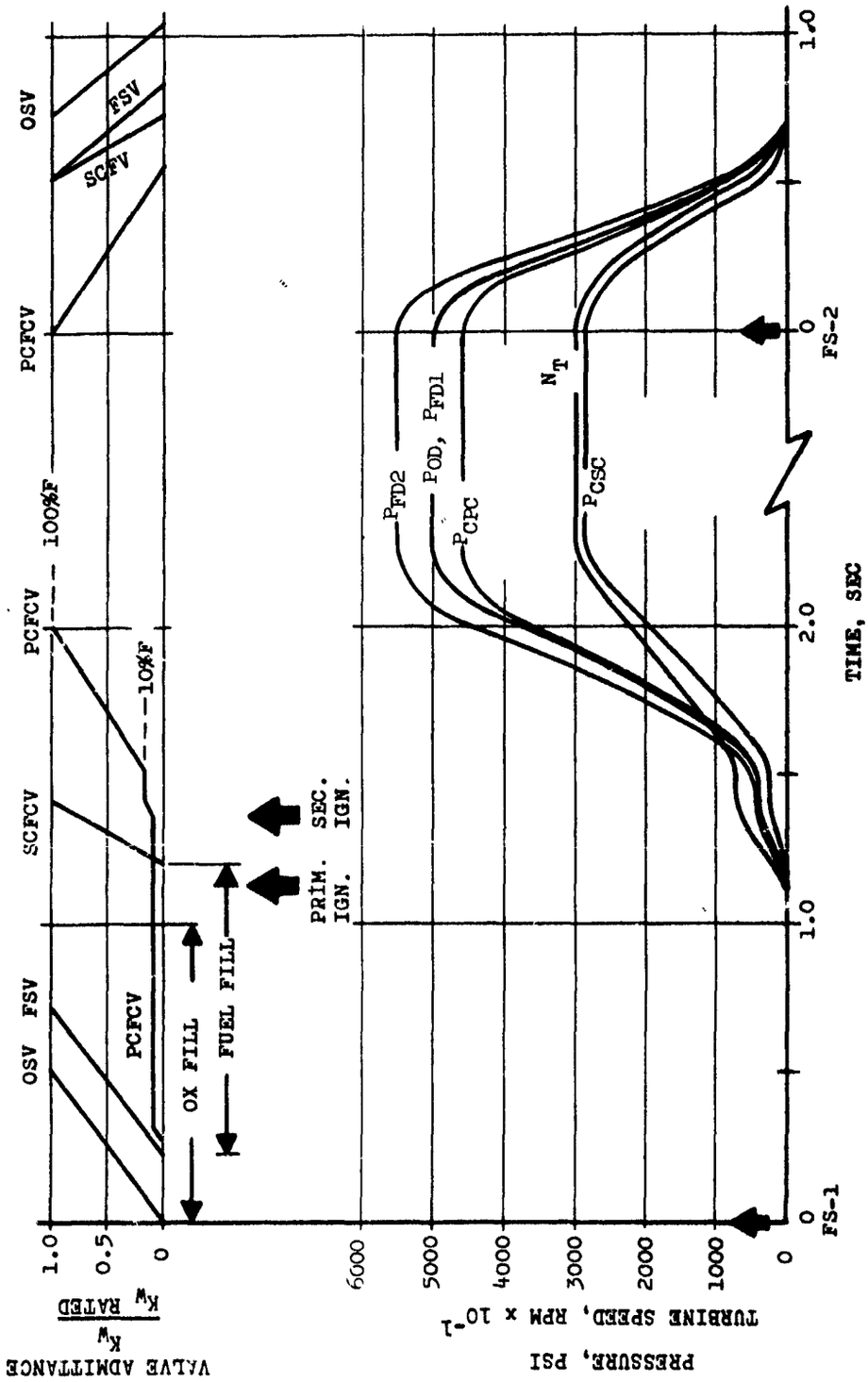

ARES Start and Shutdown (u)

Figure III-7

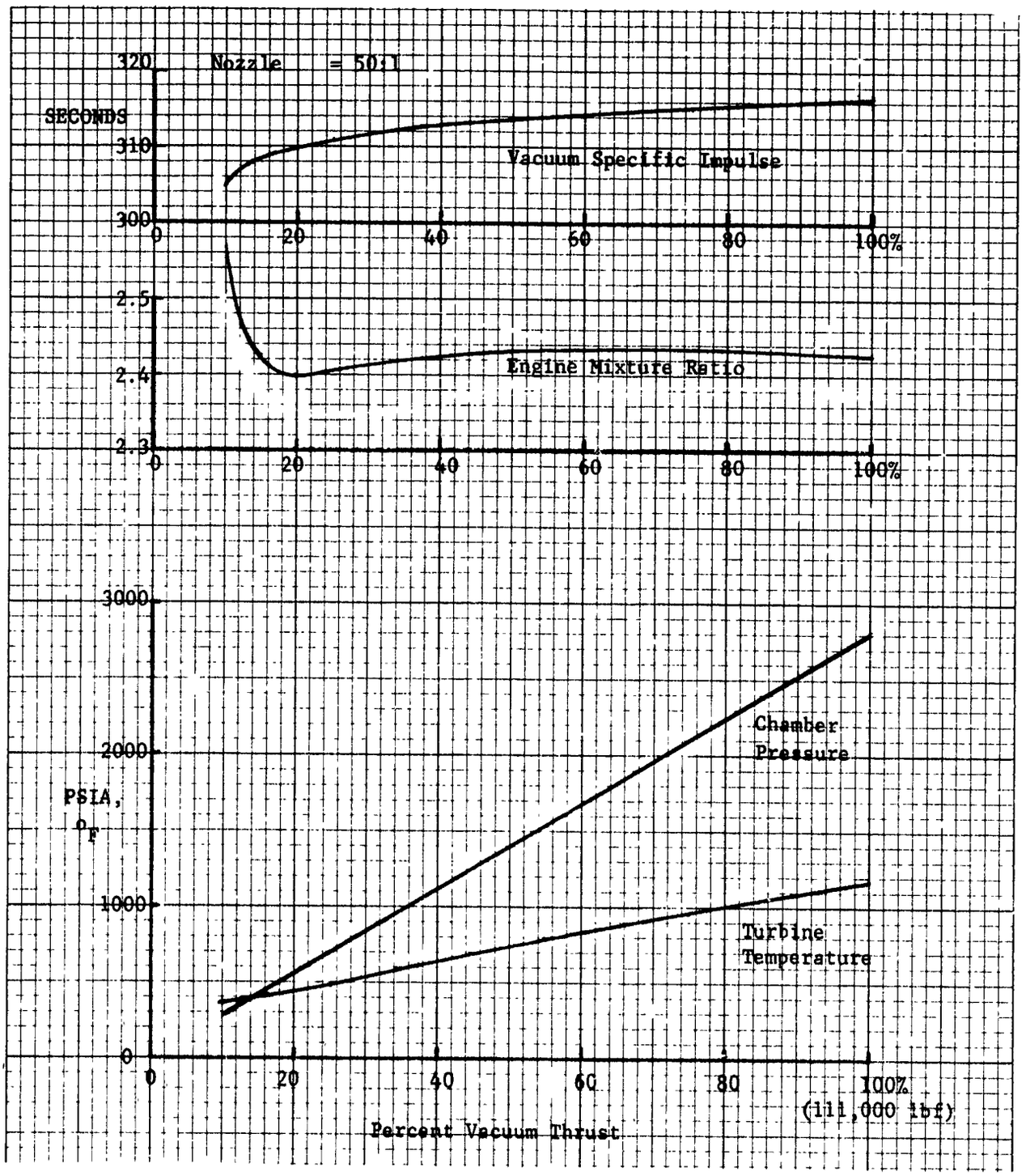

Throttling Performance, 100K ARES (u)

Figure III-8

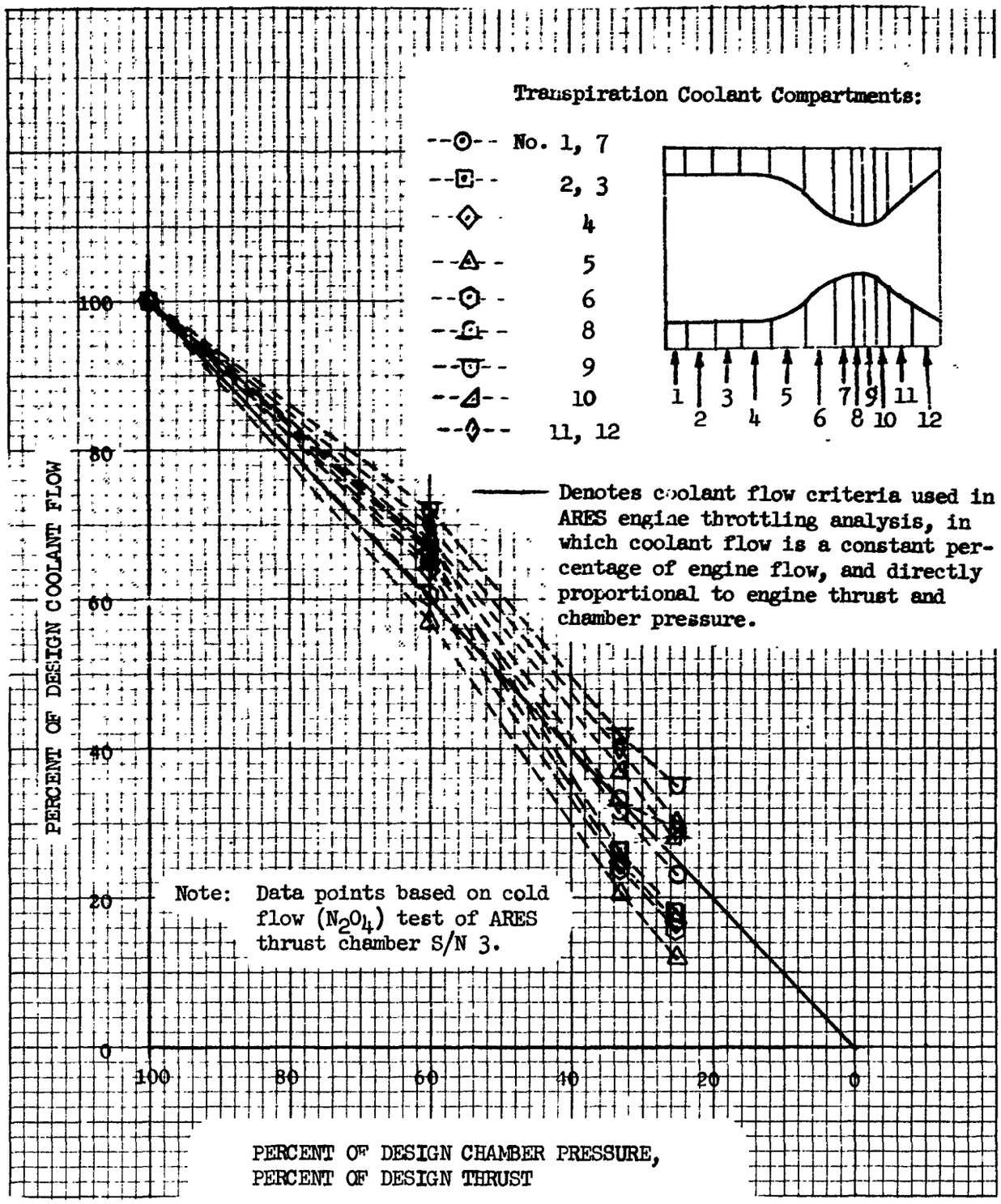

Typical Transpiration Coolant Flow During Throttling

Figure III-9

IV.

INTEGRATED AUXILIARY POWER PACKAGE (TASK I)

A. OBJECTIVES AND APPROACH

(U) The objectives of Task I of the work statement were to establish design requirements and a layout design of an Integrated Auxiliary Power Package (IAPP) for use with the throttlable-restartable 100K ARES engine. The IAPP includes roll control, thrust vector control (TVC), and propellant tank-pressurization systems.

(U) Typical functional requirements for the IAPP were established primarily on the basis of the Titan Stage II requirements because of the size similarity. Additional requirements were defined to permit operation of the IAPP prior to engine restart and during engine-throttled conditions.

(U) Using this typical set of functional requirements, a vehicle/engine IAPP system design was established. The engine-supplied system was designed to provide the vehicle with complete attitude control as well as roll control, with adequate thrust vector control, and with quick-response propellant tank pressurization. Through the use of propellant accumulators the system was designed for operation during vehicle coast periods and prior to engine restart, providing vehicle orientation, tank settling and pressurization, and engine gimbal orientation. The system was also designed to provide adequate pressure and flow regulation during engine throttling down to 10% thrust.

(U) The vehicle-located components of the IAPP system are defined in this report by means of a conceptual flow diagram and a table of predicted pressures and flows. The engine-located components are integrated physically and functionally to the basic 100K ARES engine and are defined in this report by means of an external engine drawing and tables of dimensions, weights, and flow requirements.

IV, A, Objectives and Approach (cont.)

(U) The functional requirements and conceptual design of the IAPP were then scaled and incorporated into the 25K and 500K thrust engines, as part of Tasks III and IV.

B. OPERATIONAL REQUIREMENTS

1. Titan, Apollo and Transtage IAPP Requirements

(U) Table IV-I lists the IAPP requirements and some of the operating parameters for the first- and second-stage engines of three Titan vehicles (Titan II, Gemini, and Titan IIIC) and for the upper-stage Apollo and Transtage engines.

(U) The Titan engines are pump-fed, with fixed thrust, and use solid start cartridges for their single start at altitude. The Apollo and Transtage engines are tank-fed, with fixed thrust, and have restart capability by means of their vehicle-supplied helium tank-pressurization systems.

2. Typical IAPP Requirements for 100K ARES

(U) The following basic IAPP requirements were established for the 100K ARES in a typical single-engine application.

100K ARES IAPP Requirements

TVC

Gimbal control angle	±5 deg
Maximum gimbal velocity	25 deg/sec
Maximum acceleration	18 rad/sec

IV, B, Operational Requirements (cont.)

ROLL CONTROL

Moment	1600 ft-lb

TANK PRESSURIZATION

	Oxidizer Tank	Fuel Tank
Propellant	N_2O_4	AeroZINE 50
Engine NPSH, min	20 ft	20 ft
Tank top pressure	40 ± 10 psia	30 ± 10 psia

3. General Requirements

(U) Engine throttling and restart requirements: The IAPP, including TVC, roll control, and tank-pressurization systems, shall also be operable at reduced rates, pressures, and flows, while supplied from the engine at any reduced-thrust condition down to and including 10% thrust. Also, with the engine shutdown, the IAPP shall be operable at reduced rates, pressures, and flows, while supplied from a separate pressure source, such as engine-supplied accumulators.

(U) The tank pressure requirements were selected to provide a minimum NPSH of 20 ft to the engine boost pumps during the worst condition; i.e., assuming full-thrust operation with empty tanks and relatively short suction lines, as in Titan Stage II. Selection criteria were as follows:

100% Thrust Conditions	Oxidizer	Fuel
Minimum tank dome pressure requirement, psia	28	13
Gravity head (3 g's, empty tanks), psi	+12	+1
Line loss, psi	- 7	-3
Minimum total pressure, engine suction, psia	33	11
Vapor pressure (at 80°F), psia	-20	-3
Minimum net positive suction pressure, psi (Equivalent to NPSH = 20 ft)	+13	+8

IV, B, Operational Requirements (cont.)

(U) Nominal oxidizer and fuel tank dome pressures were selected at 40 and 30 psia, respectively, to assure operation exceeding the above-noted minimums, allowing for pressure regulation and system response.

C. THRUST VECTOR CONTROL DESIGN

(U) The TVC gimbaling requirements specified above for ARES permitted the selection of a conventional, hydraulic, gimbal actuator similar to the flight-qualified actuators used on the Titan Stage II engine.

(U) The selected 100K ARES gimbal actuator is servo-controlled with an actuation pressure of 3000 psi, weighs less than 15 lb, and is 18 in. in length. It has a maximum piston force of 7500 lb, a nominal stroke of 1.8 in. and a flow demand of 10 in.^{3}/sec at the maximum stroke velocity of 4 in./sec.

(U) Dimensions and layout of the TVC are shown in an external view of the ARES engine in Figure IV-1. The two actuators have been integrated as part of the engine rather than as part of the vehicle to use the high fluid pressure generated by the engine pumps. Engine fuel was selected as the actuating medium, because the conversion of seal materials from use with hydraulic oil to the use of AeroZINE 50 is less extensive than if N_2O_4 were used. A maximum momentary flow of 5 gpm or 0.6 lb/sec of engine fuel will be required during movement of both actuators. The source of fuel to the actuator is a tap-off from the engine's first-stage fuel pump discharge. The source pressure is dropped to 3000 psi at the actuator inlet by means of a continuous-flow bleed system described in Section IV,F as part of the overall IAPP system.

(U) The 100K ARES requires a smaller gimbal force than did the Titan because of the reduced weight and moment of inertia. However, since the ARES requires gimbaling at a 10% thrust condition and during vehicle coast periods, the piston area criteria of 2.55 sq in. used in the Titan actuator was retained for the ARES. This will provide high response at the 100% thrust, high pressure

conditions and permit moderate response at the low pressure conditions (150 to 350 psia) available at 10% thrust or from the accumlator during coast periods.

D. ROLL CONTROL DESIGN

(U) The typical roll control requirement specified for ARES is 1600 ft-lb, again based on Titan Stage II. Two roll control systems were examined: (1) a system of hot-gas nozzles mounted on the engine, using turbine exhaust gas and therefore operable only during engine operation, and (2) a system of bipropellant rockets mounted on the vehicle skirt, using propellants supplied from the engine during engine operation, and from a pair of propellant accumulators in the vehicle between engine firings.

1. Engine-Mounted Roll Control System

(U) For booster applications where stage roll control is required during engine operation only, a pair of opposing nozzles can be mounted on an outboard structural portion of the ARES engine and supplied with hot gas bled from the turbine exhaust through a duct and a three-way valve.

(U) The schematic in Figure IV-2 shows such a system with redundant valves and nozzles on each side of the engine to provide reliability and to eliminate pitch and yaw moments. A practical location for the nozzles on the engine structure to provide the greatest moment arm is the mounting of a nozzle and valve assembly outboard of each boost pump; this results in a moment arm of 2 ft measured from the engine/vehicle centerline. Thus, a total thrust of 800 lb is required to produce the specified moment of 1600 ft-lb, or with two nozzles operating, a thrust of 400 lb in each nozzle. At a chamber pressure of 2700 psia, the nozzles will require a maximum weight flow from the engine of 7 lb/sec, on an intermittent (on-off) basis. As the

main engine is throttled to 10% thrust, the roll control thrust will drop to less than 10%, which is a disadvantage of this system.

2. Vehicle-Mounted Roll Control System

(U) A more versatile system, particularly for upper-stage applications, is shown schematically in Figure IV-3, and utilizes small rockets mounted on the vehicle skirt. During engine operation, these rockets receive bipropellants bled from the main engine pumps. While the engine is shut down the rockets receive propellants from low-pressure (150 to 350 psi) storage accumulators that are recharged during engine firings.

(U) A pair of opposing rockets is mounted on each of two sides of the vehicle stage, at a moment arm of approximately 5 ft (typical). For the specified moment of 1600 ft-lb, a total thrust of 320 lb is required, or 160 lb each for two-rocket operation. (Standard 100-lb rockets could be used by using three pair instead of two.) A nominal chamber pressure of 100 psia was selected for the following reasons:

a. It is the standard pressure for most of the control rockets of this type either already developed or being developed.

b. Chamber and nozzle cooling requirements are less critical at low pressure.

c. If maximum available pressures were used in the rockets, they would be tapped directly off the main engine pumps, and the pressure would consequently decrease greatly, by a ratio of 5000/350 psi, during engine throttling; however, the low-pressure bleed system, described in Section IV,F, permits better pressure regulation. The chamber pressure of the roll control rockets will vary less than 50% with the latter system.

IV, D, Roll Control Design (cont.)

d. Low-pressure rockets permit use of relatively low-pressure accumulators as their source of propellant between engine firings; the low pressure permits accumulator recharge capability even at 10% thrust operation of the engine.

(U) From the discussion above, it is evident that a throttlable type of control rocket is required. Its control valves are on-off, but since the supply pressures will decrease at times, the injector and chamber must be capable of operating at reduced thrust and flow rates. A throttlable control rocket meeting these requirements is being developed by Aerojet under Contract NAS8-20795. By use of the Aerojet HIPERTHIN injector concept, the 100-lb-thrust rockets are throttlable 4:1, weigh 7.5 lb without valves, and deliver an I_s vac of 290 to 300 sec at a mixture ratio of 1.6. The long life (25 hr) chamber is cooled by fuel-film cooling in combination with bimetallic regenerative conduction (Inconel lining, clad with copper). The nozzle has an expansion ratio of 50:1 and is radiation cooled. The controls are Moog bipropellant solenoid-operated valves.

(U) With adequate capacity in the propellant storage accumulators, additional rockets of the same type as above can be used for complete attitude control and as settling rockets prior to starting the ARES engine in space. These rockets are included in the ARES IAPP system shown in the flow diagram in Figure IV-3.

(U) A mixture ratio of 1.6 was selected for the control rockets in the ARES system. This permits a reasonable excursion of mixture ratio during changes in the supply pressures, without leaving the fuel-rich region of operation; this is desirable because of the fuel-film cooling. By proper design of the system pressure regulation, any large changes of the mixture ratio of the control rockets will only be momentary and confined to transient changes during engine starting and throttling; the heat-sink capability of the above-described rockets can absorb a momentary increase in gas temperature.

E. TANK PRESSURIZATION DESIGN

(U) Two systems were examined for pressurizing the propellant tanks from the engine: (1) an autogenous system, and (2) main tank injection.

1. Autogenous Pressurization System

(U) The autogenous pressurization system uses oxidizer-rich gas bled from the engine turbine exhaust for oxidizer tank pressurization, and uses fuel-rich gas from a small auxiliary gas generator for fuel tank pressurization. A schematic of this system is shown in Figure IV-2.

(U) A monopropellant rather than bipropellant gas generator was considered for the fuel pressurant, but a major disadvantage is that AeroZINE 50 is a poor monopropellant. Decomposition could be initiated with the proper catalyst but coking of the catalyst bed would be a problem, particularly at reduced operating pressures.

(U) Pressurant gases are cooled to approximately 300°F by means of heat exchangers in the engine propellant lines, as shown in the schematic. As an alternate, the oxidizer gas can be cooled by injecting liquid N_2O_4 directly into the gas. This system as shown can be designed to operate under engine throttling conditions.

(U) The major disadvantage of this autogenous system is that pressurization between engine firings requires a separate gas make-up system on the vehicle.

IV, D, Roll Control Design (cont.)

d. Low-pressure rockets permit use of relatively low-pressure accumulators as their source of propellant between engine firings; the low pressure permits accumulator recharge capability even at 10% thrust operation of the engine.

(U) From the discussion above, it is evident that a throttlable type of control rocket is required. Its control valves are on-off, but since the supply pressures will decrease at times, the injector and chamber must be capable of operating at reduced thrust and flow rates. A throttlable control rocket meeting these requirements is being developed by Aerojet under Contract NAS8-20795. By use of the Aerojet HIPERTHIN injector concept, the 100-lb-thrust rockets are throttlable 4:1, weigh 7.5 lb without valves, and deliver an I_s vac of 290 to 300 sec at a mixture ratio of 1.6. The long life (25 hr) chamber is cooled by fuel-film cooling in combination with bimetallic regenerative conduction (Inconel lining, clad with copper). The nozzle has an expansion ratio of 50:1 and is radiation cooled. The controls are Moog bipropellant solenoid-operated valves.

(U) With adequate capacity in the propellant storage accumulators, additional rockets of the same type as above can be used for complete attitude control and as settling rockets prior to starting the ARES engine in space. These rockets are included in the ARES IAPP system shown in the flow diagram in Figure IV-3.

(U) A mixture ratio of 1.6 was selected for the control rockets in the ARES system. This permits a reasonable excursion of mixture ratio during changes in the supply pressures, without leaving the fuel-rich region of operation; this is desirable because of the fuel-film cooling. By proper design of the system pressure regulation, any large changes of the mixture ratio of the control rockets will only be momentary and confined to transient changes during engine starting and throttling; the heat-sink capability of the above-described rockets can absorb a momentary increase in gas temperature.

E. TANK PRESSURIZATION DESIGN

(U) Two systems were examined for pressurizing the propellant tanks from the engine: (1) an autogenous system, and (2) main tank injection.

1. Autogenous Pressurization System

(U) The autogenous pressurization system uses oxidizer-rich gas bled from the engine turbine exhaust for oxidizer tank pressurization, and uses fuel-rich gas from a small auxiliary gas generator for fuel tank pressurization. A schematic of this system is shown in Figure IV-2.

(U) A monopropellant rather than bipropellant gas generator was considered for the fuel pressurant, but a major disadvantage is that AeroZINE 50 is a poor monopropellant. Decomposition could be initiated with the proper catalyst but coking of the catalyst bed would be a problem, particularly at reduced operating pressures.

(U) Pressurant gases are cooled to approximately 300°F by means of heat exchangers in the engine propellant lines, as shown in the schematic. As an alternate, the oxidizer gas can be cooled by injecting liquid N_2O_4 directly into the gas. This system as shown can be designed to operate under engine throttling conditions.

(U) The major disadvantage of this autogenous system is that pressurization between engine firings requires a separate gas make-up system on the vehicle.

IV, E, Tank Pressurization Design (cont.)

2. Main Tank Injection

(U) This system uses propellants injected directly into the propellant tanks—fuel into the oxidizer tank and oxidizer into the fuel tank. The system shown in Figure IV-3 uses propellants supplied from the propellant accumulators for tank pressurization. Therefore, the system can operate when the engine is off. This system was selected for the IAPP because it can operate when the engine is off, it is light in weight, it has fast response and it can operate with low supply pressures.

(U) Two safe methods of injector are available: Aerojet-General Corporation under a company-sponsored program has demonstrated a subsurface injection method, and The Martin Company has demonstrated a solid stream, surface injection method (Reference 2). The latter method was selected because it was conducted with both small- and large-scale equipment, including full size, flight-weight, Titan Stage II tankage, and thereby providing quantitative design data that can be directly applied to the 100K ARES system.

(U) The selected MTI system is shown schematically in Figure IV-3. During engine firings, an almost continuous flow of the liquid pressurants from the engine will be required, with the approximate values as indicated on the schematic for the 100 and 10% thrust conditions. Between engine firings, and prior to restart, a flow of liquid pressurants from rechargeable accumulators located in the vehicle will be required to make up the loss in tank pressure as the gases cool down and partially condense. Most of the tank gases generated by the MTI system are products of combustion and noncondensable; however, a small percentage of condensable vapors will also be formed and these will tend to condense as the gas cools. In sizing the system, it was assumed that the tank pressure will decay by 50% during coast periods, and require corresponding make-up from the accumulators.

IV, E, Tank Pressurization Design (cont.)

(U) Several potential problems in the MTI system were investigated and resolved in The Martin Company program. The temperature of the tank gas increased during the pressurization process, but the use of solid stream injection, as opposed to a spray, kept this rise to a safe minimum and well within the capabilities (300°F maximum wall temperature) of the thin aluminum tankage used in the tests. Also, effects on the main propellant caused by soluble inerts, entrained vapors, moisture, and temperature increase were investigated and found to be well within allowable limits.

(U) Tank pressure control within a 3% variation was attained in the full-scale, 150-sec duration tests, including start, restart, and throttling simulations. This precise pressure control was obtained with a pulse-mode injection system that varies the frequency of the pulses to control the flow rate of liquid pressurant. A pulse system of this type was also selected for the ARES system, because a wide range of flow variation required for throttling can be accomplished without seriously changing the ΔP across the pressurant injector. This will improve the performance of the system and simplify the injector design requirements.

(U) An unknown area that was not tested was the operation of the system during a zero-gravity condition, with the possible hazard and change in performance characteristics. Until tests are conducted and possibly unique equipment is developed for zero-gravity injection, it is necessary to assume the tank propellant will be properly oriented just prior to and during MTI operation. Propellant can be oriented with the small settling rockets shown on the schematic in Figure IV-3, and the tanks repressurized in approximately 5 sec preceding the engine start or restart.

F. INTEGRATED SYSTEM

(U) The functional IAPP system for the 100K ARES is shown in Figure IV-3, along with values for the predicted pressures and flows of each subsystem at 100 and 10% thrust conditions. In the figure, those components shown below the vehicle/engine interface line will be engine-mounted hardware; their physical integration with the 100K ARES is shown in the engine external view in Figure IV-1. These engine-mounted components include the two gimbal actuators with their high-pressure fuel supply lines and low-pressure return lines. The remainder of the engine-mounted IAPP components are the two pump discharge bleed lines (one fuel and one oxidizer) with check valves, orifices, and vehicle interface connections to supply propellants to the vehicle Attitude Control System (ACS) and Main Tank Injection (MTI) System, and to recharge the IAPP accumulators. The engine-mounted tubing and fitting sizes are tabulated in Figure IV-1.

(U) The attitude control and tank pressurization systems are located on the vehicle and are supplied with propellants directly from the engine or from the fuel and oxidizer accumulators located on the vehicle. In the schematic in Figure IV-3, a simple system of check valves are added to semi-regulate the IAPP system pressures and to minimize variations in the total flows bled from the engine. The fuel and oxidizer accumulators provide propellants during coast periods. The overall system operation and typical design parameters are described briefly in the following paragraphs.

(U) A major portion (about 75%) of the design flow in each supply line is not expended in the IAPP system, but is used for pressure and flow regulation and returns to the suction lines through a bypass check valve. Proper regulation requires that this check valve be designed to be full open at 500 psia, and full closed at 400 psia. By this means, as the system pressure drops below 400 psia, either because the accumulator is charging or the

engine is throttled below full thrust, the bypass flow ceases and is diverted into the system where it is needed.

(U) An isolation valve is located at each accumulator and will be closed only during long coast periods. Upstream of this valve is a relief check valve that bypasses to the suction line and is set at 900 psia cracking pressure; its purpose is two-fold: (1) to limit the accumulator pressure during lock-up, and (2) to provide a back-up system for pressure regulation at a higher but safe level should the 500-psi bypass check valve fail to open. The 900-psia relief valve will remain closed under normal operation and can be designed with minimum leakage, or it can be preceded by a burst diaphragm if zero leakage is required.

(U) Selection of final accumulator sizes should follow establishment of vehicle and mission requirements, and a detailed analysis of recharging times as a function of the mission thrust schedule. A preliminary analysis indicates that oxidizer and fuel accumulators of 2.0 ft^3 each (1.15 ft^3 liquid volume) will provide IAPP requirements for 300 sec during a coast period, equivalent to a total impulse of 48,000 lb-sec in the ACS, which is the subsystem that determines most of the IAPP requirements. From the empty condition this size of accumulator will fully recharge in 40 sec at full thrust engine operation, or half-recharge in 100 sec at 10% thrust.

(U) Pressure regulation in the system will be sufficient to maintain the following supply pressures in psia, to each of the IAPP subsystems:

Vehicle Subsystems	100% Thrust	10% Thrust	Coast Periods
Attitude control system (2 nozzles operating)	200 to 500	200 to 350	200 to 350
Tank prescurization system	200 to 800*	200 to 350	200 to 350
Engine Subsystem			
TVC-gimbal actuators	2500 to 3000	200 to 350	200 to 350

*800 psia can occur in the vehicle system when the ACS is not operating and the accumulators are fully charged.

IV, F, Integrated System (cont.)

(U) The nominal flow of approximately 3 lb/sec required by the IAPP system from the fuel and oxidizer circuits in the engine will require an initial control valve adjustment on the engine to maintain rated thrust and mixture ratio. This adjustment can be made during engine acceptance testing, and it will result in a turbine temperature increase of approximately 20°F, with minor changes in pump discharge pressures.

(U) The predicted variation in IAPP flow from the nominal would be ± 0.5 lb/sec at the 100% thrust condition, with negligible effect (less than 0.5%) on engine thrust and mixture ratio.

TABLE IV-I

IAPP REQUIREMENTS, CURRENT OPERATIONAL VEHICLES

		Titan II		Gemini		Titan IIIC			
		1st Stg	2nd Stg	1st Stg	2nd Stg	1st Stg	2nd Stg	Apollo	Transtage
Engine		LR87AJ-5	LR91AJ-5	LR87AJ-7	LR91AJ-7	LR87AJ-9	LR91AJ-9	AJ10-137	AJ10-138
Thrust	lb	430,000	100,000	430,000	100,000	430,000	100,000	20,000	16,000
Nozzle Expansion Ratio		8:1	49:1	8:1	49:1	8:1	49:1	60:1	40:1
TVC (all are gimbal type)									
Total Angle	deg	$\pm 5\frac{1}{2}$	$\pm 4\frac{1}{2}$	$\pm 5\frac{1}{2}$	$\pm 4\frac{1}{2}$	$\pm 5\frac{1}{2}$	$\pm 4\frac{1}{2}$	$\pm 9\frac{1}{2}$	± 9
Control Angle	deg	$\pm 4\frac{1}{2}$	$\pm 3\frac{1}{2}$	$\pm 4\frac{1}{2}$	$\pm 3\frac{1}{2}$	$\pm 4\frac{1}{2}$	$\pm 3\frac{1}{2}$	$\pm 8\frac{1}{2}$	± 5
Angular Acceleration	rad/sec^2	65	18	65	18	65	18	3	7.5
Angular Velocity	deg/sec	30	25	30	25	30	25	23	50
Roll Control									
Method		Gimbal	Swivel Nozzle	Gimbal	Swivel Nozzle	Gimbal	Swivel Nozzle	Fixed Thrusters	Fixed Thrusters
Source of Thrust		Main Engines	Turbine Exhaust	Main Engines	Turbine Exhaust	Main Engines	Turbine Exhaust	N_2O_4/A-50 Rockets	Hydrazine Rockets
Roll Thrust	lb	33,800	440	33,800	440	33,800	440	400	50
Moment Arm	in.	29.2	44	29.2	44	29.2	44	80	60
Moment	ft-lb	82,000	1,612	82,000	1,612	82,000	1,612	2,670	250

TABLE IV-I (cont.)

		Titan II		Gemini		Titan IIIC		Apollo	Transtage
		1st Stg	2nd Stg	1st Stg	2nd Stg	1st Stg	2nd Stg		
Tank Pressurization - Fuel									
Method		Autogen-ous	Autogen-ous	Autogen-ous	Autogen-ous	Autogen-ous	Autogen-ous	Blow down	Blow down
Gas Source		Turbine Inlet	Turbine Inlet	Turbine Inlet	Turbine Inlet	Turbine Inlet	Turbine Inlet	Bottle	Bottle
Gas		Fuel Rich A-50/N_2O_4	Fuel Rich A-50/N_2O_4	Fuel Rich A-50/N_2O_4	Fuel Rich A-50/N_2O_4	Fuel Rich A-50/N_2O_4	Fuel Rich A-50/N_2O_4	Helium	Helium
Gas Flow Rate	lb/sec	.681	.299	.650	.291	.717	.333	N/A	N/A
Gas/Propellant Ratio, $\dot{w}$(gas)/$\dot{w}$(fuel)		.00120	.00259	.00115	.00254	.00126	.00291	N/A	N/A
Gas Temp.	°F	215	220	216	220	230	220	N/A	N/A
Press. To Sonic Orifice	psia	270	400	250	390	345	390	N/A	N/A
Tank Top Pressure	psia	26-23	45-50	26-23	45-50	27-24	51-56	N/A	N/A
Tank Pressurization - Oxidizer									
Method		Autogen-ous	Blow down	Autogen-ous	Blow down	Autogen-ous	Autogen-ous	Blow down	Blow down
Gas Source		Ox.Pump	Bottle	Ox.Pump	Bottle	Ox.Pump	Ox.Pump	Bottle	Bottle
Gas		N_2O_4 Vapor	Helium	N_2O_4 Vapor	Helium	N_2O_4 Vapor	N_2O_4 Vapor	Helium	Helium
Gas Flow Rate	lb/sec	1.712	N/A	2.099	N/A	3.233	.923	N/A	N/A
Gas/Propellant Ratio, $\dot{w}$(gas)/$\dot{w}$(oxid.)		.00156	N/A	.00191	N/A	.00295	.00443	N/A	N/A
Gas Temp.	°F	376	N/A	N/A	N/A	350	350	N/A	N/A
Press. To Orifice,	psia	450	N/A	N/A	N/A	600	450	N/A	N/A
Tank Top Pressure	psia	27-18	55-10	27-18	55-10	31-19	46-48	N/A	N/A

1

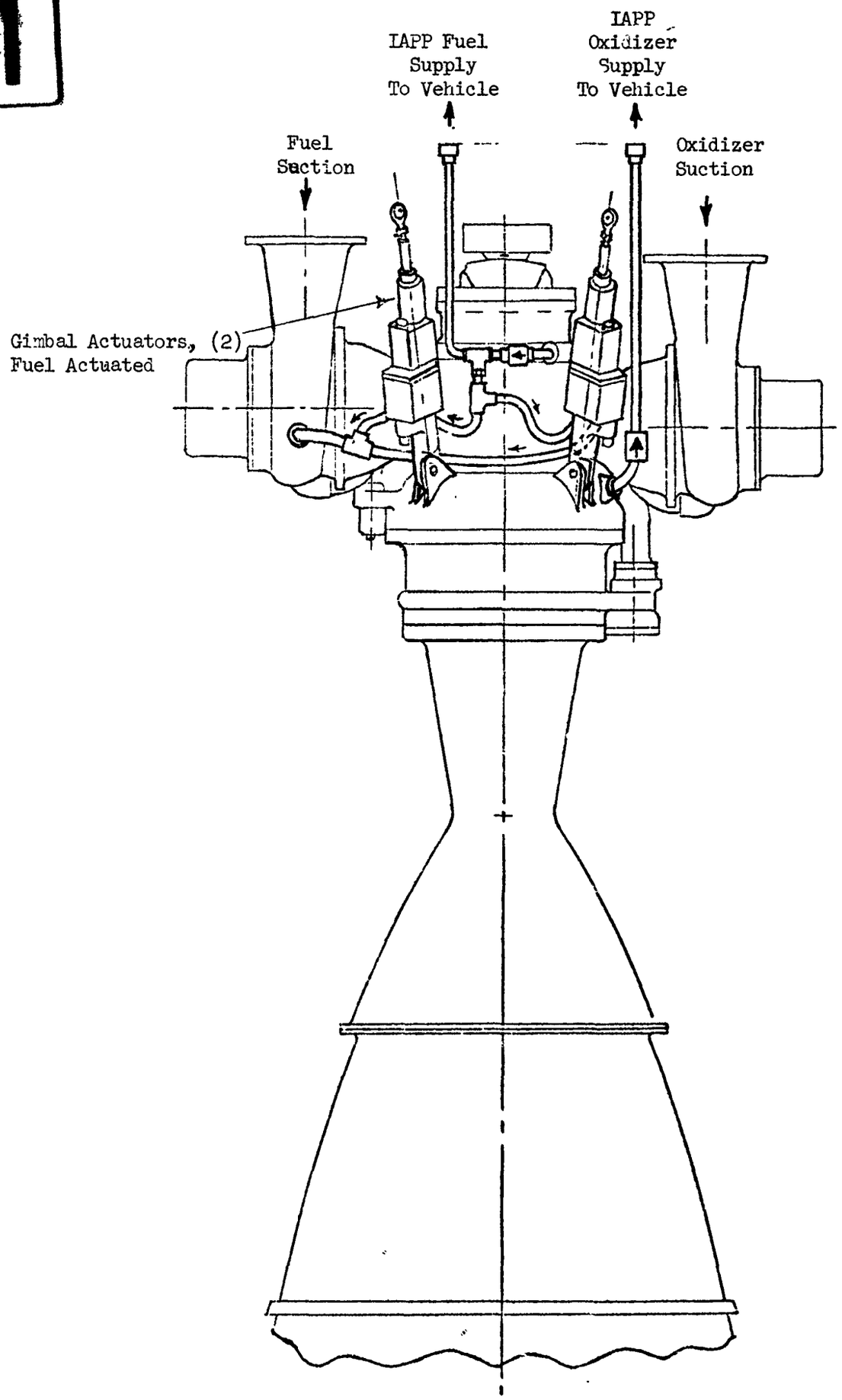

Thrust lbf

Engine gimbal
wet
Max. gimbal a
Max. gimbal v
Gimbal contro
Gimbal moment

Actuation pre
Actuator pist
Actuator cont
Actuator max.
snubbing,
Actuator leng

Weight, actua
Weight, total
lines & fit
Tubing & fitt
Actuator li
Vehicle IAI

Actuator max.
flow demand
One actuato
Both actuat
Vehicle IAPP
sustained f
Fuel
Oxidizer

izer
ion

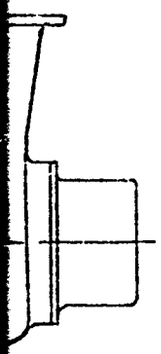

ARES ENGINE IAPP SPECIFICATION

Thrust lbf		25K	100K	500K
Engine gimbal moment of inertia, wet	slug ft^2	13.9	176	4531
Max. gimbal accel.,	rad/sec^2	18	18	18
Max. gimbal velocity,	deg/sec	25	25	25
Gimbal control angle,	deg	±8	±5	±5
Gimbal moment arm,	in	5	10	24
Actuation pressure,	psia	3000	3000	3000
Actuator piston area, net,	in^2	0.4	2.55	14.2
Actuator control stroke,	in	1.4	1.8	4.2
Actuator max. stroke including snubbing,	in	1.6	2.2	5.0
Actuator length,	in	12	18	36
Weight, actuators (2)	lb	16	30	230
Weight, total engine IAPP lines & fittings	lb	3	5	30
Tubing & fitting size:				
Actuator lines	in	1/4	1/4	1/2
Vehicle IAPP supply lines	in	1/4	3/8	1
Actuator max. momentary flow demand, fuel:				
One actuator	lb/sec	.03	.4	5.0
Both actuators,	lb/sec	.04	.6	7.0
Vehicle IAPP interface, max. sustained flow demand:				
Fuel	lb/sec	1.2	2.6	28.5
Oxidizer	lb/sec	1.9	2.9	33.5

ARES External View with IAPP Specification

Figure IV-1

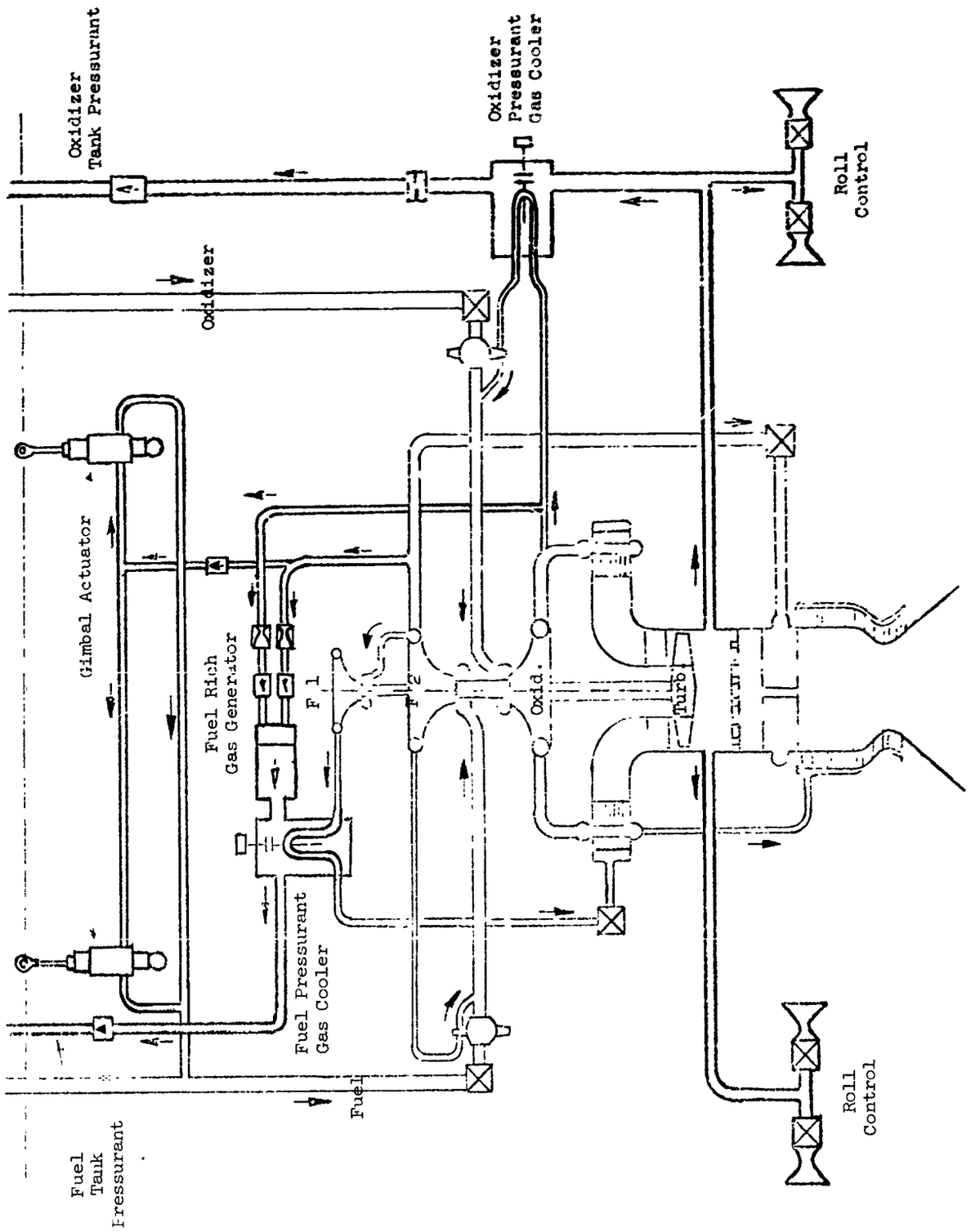

IAPP System Using Engine Gas

Figure IV-2

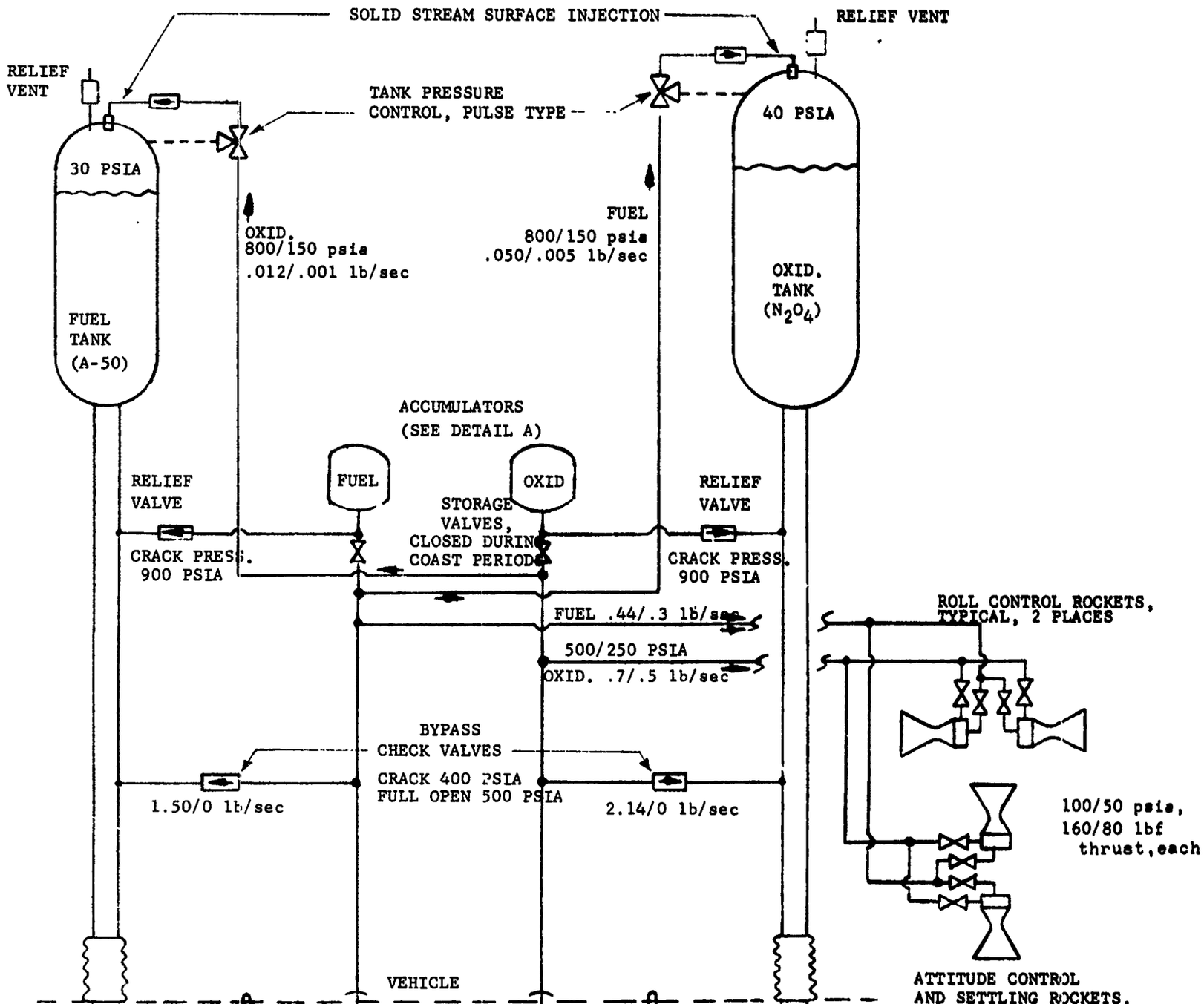
SOLID STREAM SURFACE INJECTION
RELIEF VENT
RELIEF VENT
TANK PRESSURE CONTROL, PULSE TYPE
30 PSIA
40 PSIA
OXID. 800/150 psia .012/.001 lb/sec
FUEL 800/150 psia .050/.005 lb/sec
FUEL TANK (A-50)
OXID. TANK (N_2O_4)
ACCUMULATORS (SEE DETAIL A)
FUEL
OXID
RELIEF VALVE
RELIEF VALVE
STORAGE VALVES, CLOSED DURING COAST PERIOD
CRACK PRESS. 900 PSIA
CRACK PRESS. 900 PSIA
FUEL .44/.3 lb/sec
500/250 PSIA
OXID. .7/.5 lb/sec
ROLL CONTROL ROCKETS, TYPICAL, 2 PLACES
BYPASS CHECK VALVES
CRACK 400 PSIA FULL OPEN 500 PSIA
1.50/0 lb/sec
2.14/0 lb/sec
100/50 psia, 160/80 lbf thrust, each
VEHICLE
ATTITUDE CONTROL AND SETTLING ROCKETS.

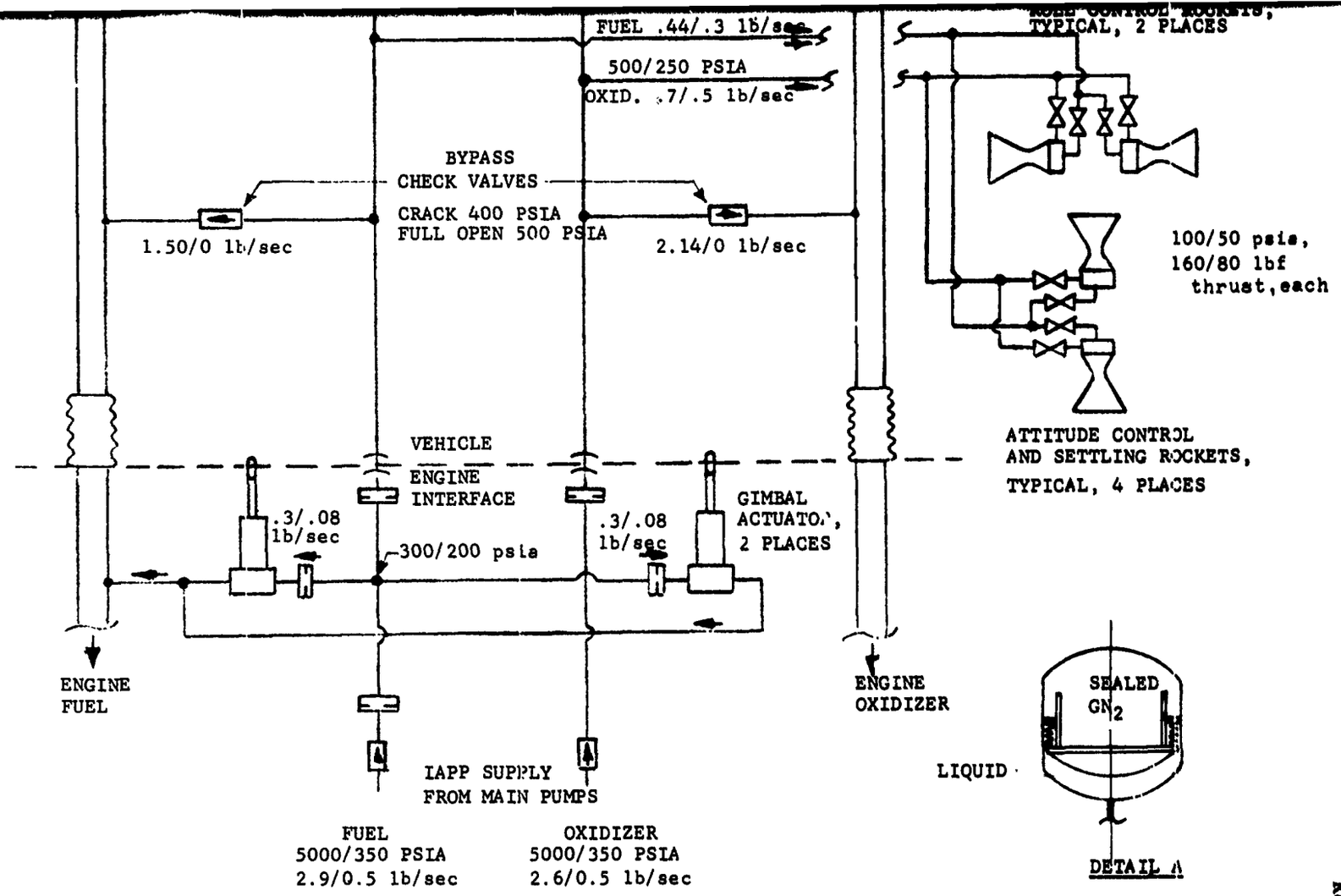

FULL: 350 PSIA, GAS=41% of VOLUME
EMPTY: 150 PSIA, GAS=96% of VOLUME

NOTE: THE PRESSURE AND FLOW DATA ARE NOMINAL VALUES FOR 100%/10% THRUST CONDITIONS IN A TYPICAL SPACE VEHICLE USING A THROTTLABLE AND RESTARTABLE ARES 100K THRUST ENGINE.

Figure IV-3

IAPP System Using Engine Liquids

V.

LOW FREQUENCY ANALYSIS (TASK II)

A. OBJECTIVES AND APPROACH

(U) A lumped-parameter low frequency stability analysis was conducted for the 100K ARES throttlable-restartable engine at eight throttle ratios for the turbulent injector configurations and at four throttle ratios for the laminar flow injector configurations. The analysis was conducted using the basic dynamic model and low frequency analysis computer program which was developed during the ARES Phase I effort on Contract AF 04(611)-10830. A new computer program was written for calculation of the coefficients of the system of ordinary differential equations which are used to represent the dynamic behavior of the engine system. This program takes as input the pressure and flow schedules for the engine and other characterizing parameters such as pump head curves, efficiencies and pump rotor moments of inertia, and as output, it punches the cards to be used with the stability analysis program.

B. MATHEMATICAL MODEL

(U) A lumped-parameter mathematical model was used to describe the engine system. The system components are closely coupled and distributed characteristics, such as hydraulic line transmission delay, are assumed to be adequately approximated by lumped-parameter models for the frequency range of 0 to 500 cycles per second. Lumped-parameter elements are described mathematically by systems of ordinary differential equations. The general differential equations are nonlinear; however, the nonlinearities are removed by application of perturbation methods, resulting in a system of simultaneous linear differential equations with constant coefficients.

(U) The component arrangement is simulated by means of 75 simultaneous equations (33 differential equations and 42 algebraic relations). These equations represent the dynamic characteristics of the pumps, lines, valves, injectors, and combustors.

C. STABILITY ANALYSIS

(U) The system of equations which represent the ARES engine are solved by Laplace transformation of the equations and subsequent use of Matrix methods, programed for digital computer, to obtain the "solution" in terms of the Laplace operator. Stability or instability of the system is easily determined at this point. The solution has the form of a ratio of two real and factored polynomials in the Laplace operator. The real-time solution, which can be obtained by inverse Laplace transformation for known input parameters, will be in the form of a sum of exponential terms formed from the roots of the denominator polynomial. The roots of the real polynomial are either real or appear as complex conjugate pairs. The real roots yield exponential terms in the transient while the complex conjugates produce sine and cosine terms multiplied by exponential decaying factors. The exponential factors in both cases will only decay if the real part of the roots of the denominator polynomial have negative real part. Hence, the stability criterion reduces to requiring that all roots of the denominator polynomial have a negative real part which is readily determined by inspection of the stability program output.

D. RESULTS

(U) Stability analyses were made for the engine with turbulent injectors at eight throttle points: 100, 75, 50, 37.5, 25, 20, 15, and 10%, and for the laminar injector system at four throttle points: 100, 37.5, 20, and 10% of full thrust. Both engines were found to be stable at the design thrust; however, the turbulent injector system was found to be unstable at 15 and 10% of design thrust and the laminar injector system was found to be unstable at 10% of design thrust. The laminar injector system was only slightly more stable (compared to turbulent); the laminar system was estimated to become unstable at 15% of full thrust while the turbulent injector system was estimated to become unstable at 18% of full thrust.

E. ENGINE SYSTEM CHANGES

(U) Several engine parameters were varied in attempts to obtain a stable configuration at the 10% thrust point. The following modifications were tried: increased hydraulic resistances in boost pump drive lines, primary fuel and oxidizer injectors, and secondary fuel and oxidizer injectors; increased boost pump and main pump rotor moments of inertia; eliminated the volume of turbine exhaust duct; eliminated unburned propellant storage terms in primary and secondary combustors; and increased the negative slopes of pump characteristics for the first-stage main fuel pump, second-stage fuel pump, and oxidizer main stage. The only changes that had a significant stabilizing effect were increasing the primary combustor oxidizer injector pressure drop and increasing the oxidizer pump characteristic slope. Doubling of the primary combustor oxidizer injector pressure drop was not sufficient to stabilize the engine. The oxidizer pump characteristic slope at the 10% thrust point was steepened from the design value of 0.0 to -0.1, -0.44, and -0.73. The change to -0.73 was sufficient to stabilize the system while the changes to -0.1 and -0.44 were not. It should be noted that the variation of this slope was from -0.65 at full thrust to -0.33 at 20% thrust to 0.0 at 10% originally. Thus, the change from 0.0 to -0.73 at the 10% thrust point is substantial and would probably be difficult to achieve physically. A better solution would be to increase pressure drops throughout the system in addition to changes to the pump characteristic. The necessary change in pump characteristic slope could be achieved by a bypass or recirculation arrangement for the oxidizer pump such that the operating point at low thrust is shifted to higher flow rate.

(U) The real and imaginary parts of the root that produced the instability are plotted in Figure V-1 as a function of the operating thrust level. The point at which the real part of the root becomes positive can be clearly determined.

V, E, Engine System Changes (cont.)

(U) The results of the various changes which were made at the 10% thrust point for the turbulent injector configuration are shown in Figure V-2. The arrows indicate the effect which the identified change had on the real and imaginary parts of the offending denominator root. Each change also produced effects in other roots, but in all cases the real parts of all other roots remained negative so that stability was not affected. Some of the changes produced destabilizing effects while the change in the oxidizer pump head curve had the most significant effect and was the only change which resulted in a stable system.

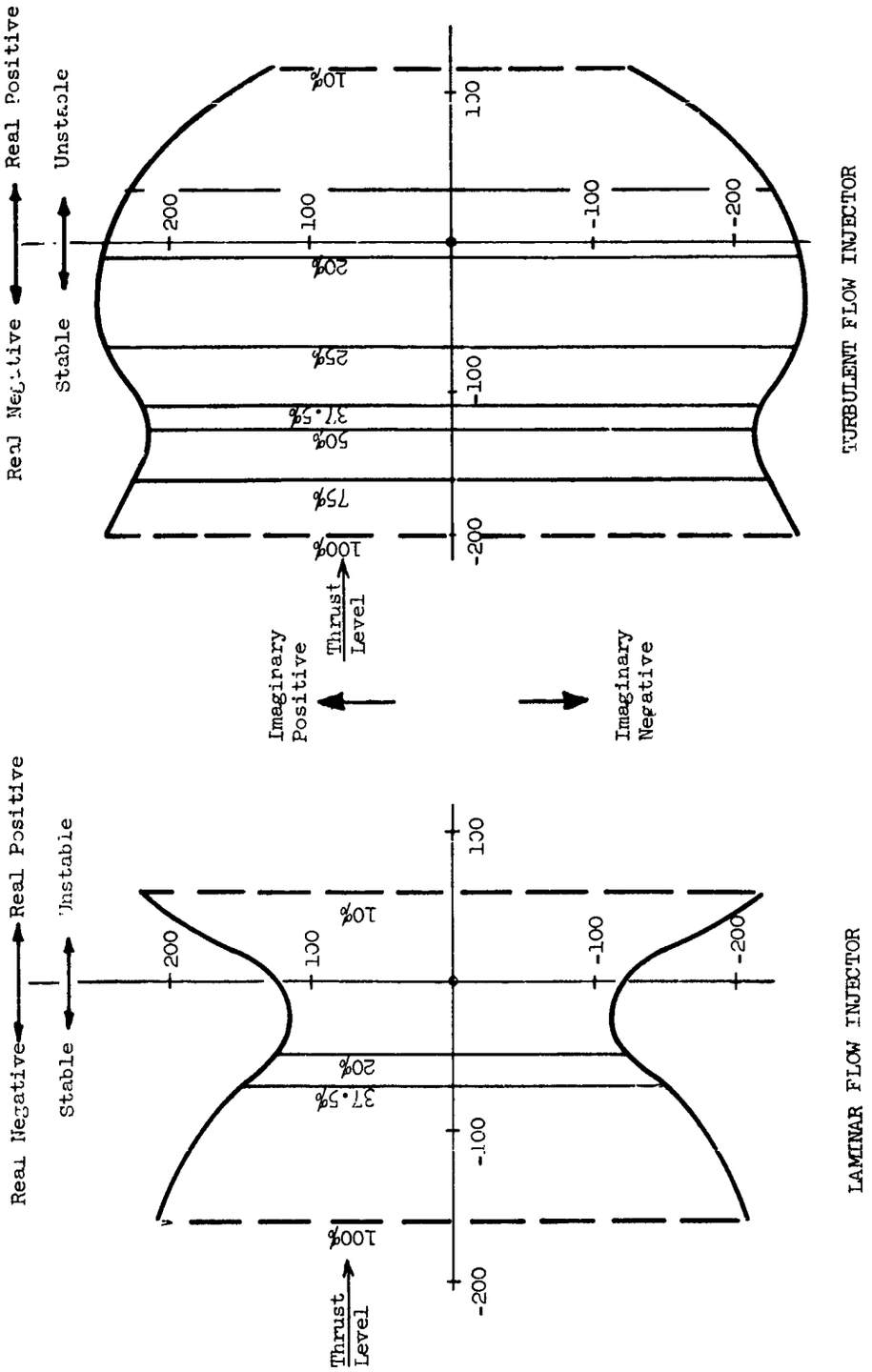

ARES Throttling Stability

Figure V-1

LARGER EFFECTS

A. Decrease Head Curve-Ox. Pump (1. $\psi'_{OM} = -0.1$; 2. $\psi'_{OM} = -0.44$)
B. Increased Ox. Prim. Inj. Drop
C. Zero Comb. Lag
D. Elim. T.E. Duct
E. Increase Inertia Main Pump

MINOR EFFECTS

A. Increased Ox. Boost Pump Line Drop
B. Decreased Head Curve - FM-2
C. Increased Fuel Prim. Inj. Drop.
D. Increased Fuel Sec. Inj. Drop.
E. Increased Ox. Sec. Inj. Drop
F. Increased Fuel B.P. Line Drop

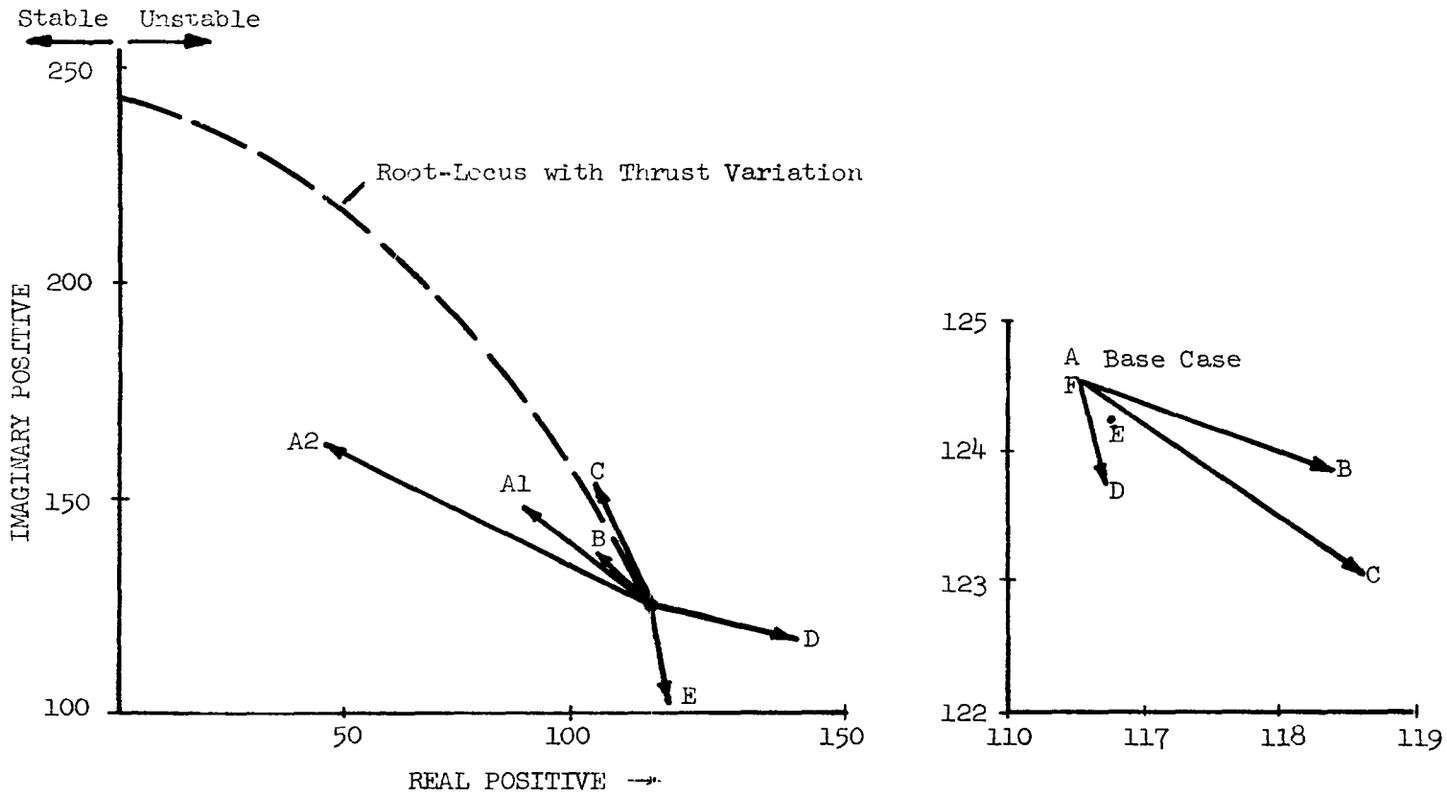

Stabilizing Effects of Engine Changes

Figure V-2

VI.

25K ENGINE DESIGN (TASK III)

A. OBJECTIVES AND APPROACH

(U) The objectives of Task III were to establish the thrust chamber pressure and establish an engine design based on the established pressure for a throttlable, restartable engine having a throttle range of 10:1 and a vacuum thrust of 25,000 lbf using a nozzle with a 150:1 area expansion ratio.

(U) The approach to accomplishing these objectives was to (1) analyze the heat transfer, performance and payload effects of thrust chamber pressure to establish the chamber pressure; (2) use the established pressure and establish design criteria and operating characteristics over the throttling range; and (3) prepare a 25K thrust (vacuum) engine design on the basis of these criteria, and similar to the 100K base-line design. The results of this task are described in the following paragraphs.

B. CHAMBER PRESSURE OPTIMIZATION

(U) To maximize the performance potential of a 25K engine design it was desirable to consider a range of chamber pressures, particularly because of the inherent increase in cooling requirements associated with the smaller chamber geometry. In recognition of the relative importance of performance factors other than cooling losses, such as energy release and recombination or kinetic losses, the study took into account the variation of all performance factors with chamber pressure and geometry. Additionally, the effects of chamber length and weight on vehicle payload were considered.

VI, B, Chamber Pressure Optimization (cont.)

(C) The analysis was performed at each of three chamber pressures: 500, 1600, and 2800 psia. The basic chamber design approach adhered to at all pressures was to determine the throat diameter for an estimated performance level and then establish a family of cylindrical chambers of various contraction ratios (A_{inj}/A_{throat}), each with varying cylindrical length, and blend radii equal to the throat diameter connected by a 30-degree convergence angle.

(U) Minimum-length RAO nozzle contours were similar for each pressure and were established at an expansion ratio of 150:1 by Aerojet computer program 1025. Nozzle geometrical efficiencies were also determined with this same program.

(U) Cooling requirements for each chamber were computed using a one-dimensional fin conduction model in association with the Stollery & El-Ehwany boundary layer mixing model for film cooling (Reference 3). This is the same technique presently used on all transpiration cooling analyses on the ARES chambers. All remaining chamber design and analysis followed the same ground rules as does the ARES chamber, including the use of 0.021-in. platelets at area ratios (chamber and nozzle) greater than 2.3, and 0.011-in. platelets at all other points. Because of the variation in chamber pressure and, hence, the nozzle cooling requirements, each nozzle was assumed to be cooled to a point where the gas pressure was 30 psia. Consequently, each chamber has a different cooled length. The selection of this nozzle extension attachment point is based on experience with the Transtage nozzle and the ARES transpiration-cooled chamber. The ARES nozzle extension is similar in design to the nozzle on the Apollo service module engine, which is shown in Figure III-4. The upper portion of the Apollo nozzle is columbium alloy C-103 with a ceramic-aluminide coating to inhibit oxidation. This upper portion of

the nozzle operates with a wall temperature of 1950°F at a static pressure of 2.4 psia. A similar nozzle configuration for the Transtage engine has demonstrated an accumulative duration of 4397 sec with 205 restarts without failure at a wall temperature of 2200°F and static pressure of 2.2 psia.

(U) The ARES nozzle extension is film cooled by the carry-over from the transpiration-cooled chamber and nozzle. Testing experience on the ARES program has shown that this coolant carry-over significantly lowers the extension nozzle temperature. This permits attachment of the nozzle extension at a higher static pressure. The value of static pressure where the nozzle extension can be attached must be determined experimentally. For this study, it was assumed that the nozzle extension could be attached at a static pressure of 30 psia.

(U) The boundary layer losses were calculated by Aerojet computer program E-25202 and include the effects of shear drag, heat transfer, and displacement thickness.

(U) The energy release loss calculation for each injector/chamber combination assumed that injector and propellant conditions could be achieved which equal those of the ARES chamber. These conditions include injection density, propellant atomization characteristics, and transport properties. With all of these effects constant, the energy release loss becomes only a function of changes in chamber geometry and chamber pressure.

(U) The kinetic or finite rate performance losses were calculated using the Kushida sudden freezing criteria (Reference 4) and were only a function of chamber pressure with the nozzles and gas condition being similar.

VI, B, Chamber Pressure Optimization (cont.)

(C) The effect on weight of changes in chamber geometry was also considered in the optimization as the basic performance of the thrust chamber is only important to the extent that it contributes to the overall vehicle performance. Changes in weight from a nominal chamber used in previous scaling studies were calculated assuming 1-in.-thick chamber walls of stainless steel. The nominal chamber at each pressure was a 40L* cylindrical chamber with a 30-degree convergent section and a cylindrical length such that a chamber L/D (length-to-throat/chamber diameter) of 1.5 was achieved. Weight changes were converted to equivalent I_s using 30 lb of payload per second of I_s exchange ratio. Nozzle length was converted to payload at the rate of 1 lb/in. These numbers are representative of a synchronous equatorial orbit with a pump-fed engine powered Transtage.

(U) The analysis at each chamber pressure was carried out in the following manner. Three values of chamber contraction ratio were selected and the sum of cooling, energy release, and weight losses determined as a function of cylindrical length. Examination of this result together with the optimum cylindrical length versus contraction ratio and the sum of the losses at the optimum length versus contraction ratio led to the selection of a large contraction ratio, zero cylindrical length chamber at each chamber pressure. It must be recognized that for physical reasons, these chamber configurations would not be the ones selected for actual design. For the purpose of optimizing chamber pressure, however, while not evaluating absolute performance level, any group of chambers consistant with each other is adequate.

(C) The individual losses and the resulting delivered specific impulses are shown in Figure VI-1 as a function of thrust chamber pressure. This figure shows an optimum pressure at some point between 1500 and 2000 psia. The advantage, however, is sufficiently small that other factors must be considered. For this reason, the overall engine weight and length were taken

into account to determine the effect of chamber pressure on vehicle payload. The changes in weight and length for the selected geometries were based on the same nominal design described above and used the engine lengths and weights from the engine scaling studies. Again, the validity of those weights and lengths is not critical to the optimization. Length and weight were converted to payload on the basis of one-pound-payload/pound-engine and one-pound-payload/inch-engine (interstage structure). The results of this study are shown in Figure VI-2, which shows an advantage for the higher chamber pressures. The advantage is 47 lb of payload over the 1600-psia chamber pressure while the nominal payload for the aforementioned mission is approximately 3700 lb.

(C) Evaluation of the effect of throttling on engine performance is represented by Figure VI-3 which shows that delivered specific impulse is reduced as the engine is throttled; however, the magnitude of this reduction is less for the engine designed to operate at 2800 psia.

(C) On the basis of this study, the engine was designed to operate with a 2800-psia chamber pressure, since this resulted in the highest payload, minimum throttling performance degradation, and near maximum delivered specific impulse.

C. DESCRIPTION

1. Performance Rating

(C) The 25K engine operating parameters are tabulated below.

Thrust, vacuum, lbf	25,000
Specific impulse, predicted, sec	324.6
Specific impulse efficiency, %	90.5

VI, C, Description (cont.)

Nozzle area expansion ratio (RAO)	150:1
Propellants	N_2O_4/AeroZINE 50
Chamber pressure, psia	2800
Mixture ratio, injector	2.2
NPSH, fuel, ft	20
NPSH, oxidizer, ft	20

(U) The specific impulse efficiency (percent of theoretical) of the 25K engine is less than that of the 100K engine, for a given development level because the losses in the smaller nozzle are higher and a higher proportion of coolant is required to maintain the same wall temperature in the smaller chamber.

2. Layout Design

(C) A layout design of the 25K thrust engine with a 150:1 area ratio RAO contour nozzle is shown in Figure VI-4.

(U) Engine and component design criteria were established such that critical design parameters would reflect a similar degree of conservatism as in the 100K base-line engine design; e.g., similar values for primary combustor gas temperature, bearing seal velocity, shaft stress, and chamber wall temperatures were used. The 25K engine functional operation and its start and shutdown sequence are identical to those of the 100K base-line engine.

(C) The platelet injector concept currently being tested in the ARES program, and already described in Section III,B,3 and Figure III-3, was selected for the 25K engine. Injector parameters for the 25K design are as follows:

VI, C, Description (cont.)

$\dot{w}_F$, lb/sec	84.1
Injector blade length, total, in.	240.0
$\dot{w}_F$/blade length, lb/sec/in.	0.35
$\dot{w}_{gas}$ injector, lb/sec	248.
Net gas area, in.^{2}	42.5
Average gas flow, lb/sec/in.^{2}	5.84
Gross area, in.^{2}	72.5 (ref)
Blade area, total, in.^{2}	30.0 (ref)

(U) An external envelope drawing of the engine is shown in Figure VI-5. The engine portion of the IAPP for the 25K design is defined in Figure IV-1, in which the dimensions for the gimbal actuators, etc., were scaled from the 100K design.

D. ENGINE THROTTLING PERFORMANCE

(U) Engine thrust is controlled in the same manner as the 100K baseline engine. Some of the engine and component performance parameters are plotted in Figure VI-6, with a major list of the operating parameters shown in Table VI-I. The format of Table VI-I is the same as for the 100K engine, with the symbols defined in Table III-IV.

(U) The throttling characteristics of the 25K thrust engine are also similar to those already described for the 100K engine. As in the 100K engine, the laminar flow characteristics designed into the transpiration film coolant circuit maintain the coolant flow at a constant percentage of total flow during throttling. Also, the injector ΔP's stay at a reasonable percentage of chamber pressure, due to laminar flow design of the injectors.

VI, D, Engine Throttling Performance (cont.)

(U) The pump design efficiencies are six points lower, and the turbine efficiency three points lower, than those of the 100K baseline ARES, due to the smaller size and flows of the 25K engine. The turbine operating temperature was maintained at the 100K engine range (1200°F) by increasing the turbine pressure ratio and the pump discharge pressures.

E. WEIGHT BREAKDOWN

(U) Calculated dry weight and gimbal moment of inertia values for the 25K engine are shown by component in Table VI-II. Wet weight and inertia values are also shown. Estimated weight and gimbal moment of inertia values for a lower weight production prototype engine are shown in Table VI-III. The lower weight of this production prototype engine, as in the 100K engine, is achieved by using two interface joints between the thrust chamber and turbopump in place of the three as shown in Figure VI-4.

TABLE VI-I

THROTTLING PERFORMANCE, 25K ARES (u)

	100% F CASE 1	75% F CASE 2	50% F CASE 3	37.5% F CASE 4	25% F CASE 5	20% F CASE 6	15% F CASE 7	10% F CASE 8
F	[redacted]	[redacted]	[redacted]	[redacted]	4241.75000	5012.58085	3787.64575	[redacted]
PCSC	2799.99997	2100.24261	1401.45580	1051.85179	705.24529	566.33497	426.63737	286.49327
MR-ENG	2.46508	2.46408	2.46732	2.47888	2.46218	2.46362	2.46645	2.58003
IS	324.82432	323.29837	321.38039	320.08736	318.02296	316.60640	314.60619	309.57193
W-ENG	[redacted]	[redacted]	38.97489	29.31575	19.68962	15.83253	11.94397	8.09774
WOT	[redacted]	41.41188	27.79567	[redacted]	14.00370	11.26053	8.49772	[redacted]
WFT	[redacted]	[redacted]	11.17493	8.42804	5.68793	4.57073	3.44532	[redacted]
NT	64888.16211	52084.92725	39482.32471	32700.99707	25417.01929	22211.36450	18748.43994	14815.31970
TTIT	1200.15847	973.73698	730.65012	595.90288	471.18681	441.21733	405.73026	349.70808
RPT	1.66596	1.54410	1.42288	1.36134	1.29669	1.27018	1.24041	1.20952
PODTM								
PODTM	[redacted]	[redacted]	2305.63733	1647.48199	1048.45432	821.65120	605.21882	396.42069
DPOH1	[redacted]	22.21744	13.22488	7.48274	3.36203	2.17236	1.23508	[redacted]
DPORG	48.84790	26.12534	12.72684	7.19711	3.23013	2.08730	1.18645	.85946
DPOH2	49.50122	26.49414	12.89124	7.28957	3.27145	2.11398	1.20159	.86660
DPOJPC	197.22449	156.45999	109.20441	83.38278	56.65196	45.77853	34.70306	23.97437
PCPC	[redacted]	[redacted]	2157.58997	1842.12979	981.93872	769.69904	566.89263	378.73929
PFDTM1	[redacted]	[redacted]	2232.42721	[redacted]	997.69914	777.69170	567.70531	[redacted]
DPSCVI	116.83649	70.09412	33.74326	19.95631	9.46913	6.21798	3.60512	1.59624
DPFSCV	1880.60275	1123.07040	536.74269	318.19859	150.83096	99.01344	57.39256	25.40689
DPSCVO	117.06381	69.88873	33.51860	19.79550	9.38278	6.15923	3.57011	1.58042
DPFJSC	[redacted]	[redacted]	182.42276	[redacted]	181.36175	82.77376	63.54866	[redacted]
PCFACE	[redacted]	[redacted]	1444.00000	[redacted]	726.65482	583.52728	439.58886	[redacted]
PFDTM2	6088.36731	4318.92096	2667.89813	1905.74225	1202.02121	936.70424	683.46577	440.28264
DPFPCV	499.98291	332.97052	367.04153	269.88712	168.61777	127.15430	89.88260	54.16312
DPPCVO	46.38031	17.22122	5.33405	2.35493	.78186	.43670	.20399	.06561
DPFJPC	[redacted]	[redacted]	120.39582	81.01884	48.60605	36.69305	25.38063	14.84341
PCPC	[redacted]	[redacted]	2157.58997	1842.12979	981.93872	769.69904	566.89263	[redacted]
PTIT	[redacted]	[redacted]	[redacted]	[redacted]	[redacted]	[redacted]	[redacted]	[redacted]
PTET	3023.01273	2249.67050	1488.52507	1112.19635	741.76292	594.30793	446.80759	299.33851
PGJT	3009.29245	2240.78519	1483.64945	1108.87325	740.20250	593.28600	446.05981	298.89373
PCFACE	2888.00000	2164.00000	1444.00000	1083.78302	726.65482	583.52728	439.58886	295.19039
KWFSCV	[redacted]	.43736	.43736	.43736	.43736	.43736	.43736	[redacted]
KWFPCV	[redacted]	[redacted]	[redacted]	[redacted]	.04841	.04186	[redacted]	[redacted]
KWOPCV	5.72140	5.72140	5.72140	5.72140	5.72140	5.72140	5.72140	5.72140
KWFCV	.09718	.09174	.08341	.07722	.06828	.06351	.05726	.04949
KWRGV								

NOTE: Values less than unity have their decimal location noted by prefix. Example: '-5' indicates decimal point is 5 places to the left of first digit. No prefix and no decimal point indicate decimal precedes first digit.

TABLE VI-I (cont.)

	100% F	75% F	50% F	37.5% F	25% F	20% F	15% F	10% F
	CASE 1	CASE 2	CASE 3	CASE 4	CASE 5	CASE 6	CASE 7	CASE 8
F	[redacted]	18779.78809	12926.40710	9203.60010	6261.70000	5612.68008	3757.64575	2506.[illegible]
DP/PSF	.10396	.11465	.12633	.13264	.13949	.14185	.14476	.14436
DP/PPO	.03874	.04435	.05061	.05407	.05769	.05948	.06122	.06467
DP/PPF	.05893	.05820	.05580	.05319	.04950	.04767	.04473	.03923
PCSC	[redacted]	[redacted].24261	1401.45580	1131.05179	768.24629	666.33497	426.63737	286.[illegible]
NRJC	[redacted]	2.21700	2.22085	2.21299	2.19744	2.19892	2.20186	2.[illegible]
AE/AT	150.00000	150.00000	150.00000	150.00000	150.00000	150.00000	150.00000	150.00000
ETAC	.95472	.95278	.95081	.94993	.94894	.94851	.94813	.94782
ETAN	.94870	.94693	.94339	.94007	.93425	.93047	.92493	.91601
C*SC	[redacted]	[redacted]	[redacted]	[redacted]	[redacted]	[redacted]	[redacted]	[redacted]
CF	[redacted]	1.92526	1.92449	1.92088	1.91172	1.90575	1.89638	1.[illegible]
WGJSC	[redacted]	[redacted].77048	26.37399	19.68818	13.09266	10.49708	7.88936	[redacted]
WFJSC	17.92542	13.67375	9.61866	7.39412	5.09176	4.125[illegible]	3.14100	2.08987
WOFC	5.88779	4.43854	2.97795	2.24088	1.50651	1.20989	.91269	.61948
WFC/WF	.07650	.07641	.07640	.07644	.07651	.07642	.07641	.07650
WORG	[redacted]	[redacted]	24.55046	18.43458	12.33338	9.90923	7.46745	[redacted]
DPFJSC	[redacted]	[redacted]	182.42276	143.75482	101.36175	82.77376	63.[illegible]	42.[illegible]
DPOFC	[redacted]	[redacted]	[redacted]	[redacted]	339.64700	253.34387	177.34[illegible]	[redacted]
DPORG	48.64790	28.1253	12.72684	7.19711	3.23013	2.08730	1.18645	.55946
DTORG	.00000	.0000[illegible]	.00000	.00000	.00000	.00000	.00000	.00000
D*FJSC	55.59731	55.60315	56.94952	56.99657	56.03644	56.04524	56.05553	56.06413
D*OFC	[redacted]	[redacted]	69.27879	[redacted]	69.38479	69.38927	69.39285	[redacted]
D*ORG	[redacted]	[redacted]	90.27734	90.00940	69.76835	69.47666	69.59343	[redacted]
NRPC	11429412	13.08787	15.77525	17.62992	20.70170	22.28586	24.53813	29.69833
WOJPC	48.40632	36.60893	24.55046	18.43458	12.33338	9.90923	7.46745	5.12581
WFJPC	4.28597	2.79717	1.55626	1.03391	.59577	.44524	.30432	.17260
D*OJPC	[redacted]	[redacted]	[redacted]	[redacted]	69.70068	69.62107	69.[illegible]	[redacted]
D*FJPC	[redacted]	[redacted]	[redacted]	[redacted]	56.04144	56.04358	56.05004	[redacted]
POT	[redacted]	[redacted]	37.14000	37.14000	37.14000	37.14000	37.14000	[redacted]
PFT	[redacted]	[redacted]	17.51000	[redacted]	17.51000	17.51000	17.[illegible]	[redacted]
NPSPOB	[redacted]	[redacted]	17.[illegible]	[redacted]	19.04793	19.23213	19.36147	[redacted]
NPSPFB	7.79128	10.81904	12.98166	13.74866	14.30542	14.47259	14.60607	14.70851
NPSPON	123.00678	168.75850	80.27665	65.20828	49.99406	43.83071	37.84519	31.13608
NPSPFN	80.97755	66.26750	49.58131	40.85841	32.24320	28.71460	25.16275	21.57647

TABLE VI-I (cont.)

	100% F CASE 1	75% F CASE 2	50% F CASE 3	37.5% F CASE 4	25% F CASE 5	20% F CASE 6	15% F CASE 7	10% F CASE 8
F	[redacted]	[redacted]	12826.40710	9383.60610	6261.75000	5012.68065	3767.64575	[redacted]
ETAT	.72564	.72549	.72231	.71711	.70468	.69508	.67969	.65541
WTI	53.69230	39.40610	26.10672	19.46849	12.92915	10.35447	7.77177	5.29841
U/C-GT	.54328	.52763	.50209	.48166	.45078	.43311	.40985	.38008
SHPT	[redacted]	[redacted]	564.968[redacted]	311.72628	140.23905	91.70989	53.55290	[redacted]
SHPDM	[redacted]	786.06451	329.13715	181.53489	81.68267	53.27802	31.09936	14.60223
SHPFM1	[redacted]	539.12685	225.96480	124.93926	56.47811	36.90675	21.61047	10.24248
SHPFM2	46.54796	25.05564	10.075.29	5.41076	2.39484	1.56513	.92408	.45181
POSTM	153.10170	127.62150	98.77939	83.54851	68.18425	61.95529	55.60124	49.10312
PODTM	[redacted]	[redacted]	2305.63733	1647.48199	1048.45432	821.85120	605.21882	396.42869
HOMNC	[redacted]	8471.12810	3555.09409	2518.93082	1578.46461	1223.60725	884.93159	559.53147
QOSM	[redacted]	229.13076	155.91366	118.61384	81.13690	66.05902	50.75557	35.73267
HOM/N2	-5 20803337	-5 21641994	-5 22805818	-5 23555604	-5 24433496	-5 24602277	-5 25175576	-5 25471971
Q/QDOM	.99990	.93606	.84026	.77181	.67925	.63283	.57604	.51318
ETAOM	.62000	.61947	.60936	.59613	.56804	.54965	.52329	.48911
NSO	[redacted]	[redacted]	1070.79558	1001.65128	914.23475	872.68921	823.23677	770.23361
SOM	[redacted]	[redacted]	12855.94922	10856.20740	8510.26367	7413.96539	6161.14349	4701.31836
D#OSM	[redacted]	89.34751	89.38542	89.40491	89.42075	89.42736	89.43476	89.44866
PFSTM1	83.86246	69.11011	52.36549	43.64533	35.01152	31.47621	27.91660	24.32261
PFDTM1	5299.42944	3676.15875	2232.42731	1585.48825	997.69914	777.69170	567.70531	366.39335
HFMNC1	[redacted]	[redacted]	8597.48114	3955.64978	2471.42181	1915.30916	1385.15124	870.11916
QFSM1	[redacted]	[redacted]	99.62384	76.34619	52.98798	43.41138	33.70328	23.42496
HF1/N2	[redacted]	[redacted]	-5 35907648	-5 36990980	-5 38255525	-5 38822936	-5 39466417	-5 40083076
Q/QDF1	1.00012	.93164	.83899	.77629	.69319	.64987	.59773	.52572
ETAFM1	.57000	.56932	.56048	.54904	.52675	.51182	.49080	.45630
NSF-1	712.73129	666.56663	608.96159	572.65065	527.84116	505.47300	479.37772	444.52902
SFM1	[redacted]	[redacted]	10395.22039	8715.04504	6740.69806	5816.34618	4776.23466	3631.41[redacted]
D#FSM1	[redacted]	56.64613	56.06159	56.06818	56.07550	56.07811	56.08123	56.08445
PFSTM2	4953.82733	3478.56097	2142.54196	1533.52570	973.30561	761.58163	558.21326	361.98238
PFDTM2	6008.36731	4318.92096	2667.89813	1905.74225	1202.02121	936.90424	683.46577	440.28264
HFM2	2694.83867	2150.28159	1346.13214	954.46477	566.83260	449.96353	321.52092	201.03004
QFSM2	[redacted]	[redacted]	14.[redacted]	10.[redacted]	6.92416	5.72196	4.[redacted]	[redacted]
HF2/N2	[redacted]	[redacted]	-6 86353950	-6 89256100	-6 90837491	-6 91286717	-6 91470058	-6 91581887
Q/QDF2	[redacted]	[redacted]	.65150	.56215	.48048	.45434	.43231	.42168
ETAFM2	.49010	.47859	.44364	.41820	.38572	.37367	.36332	.35806
NSF-2	1038.43640	815.60048	678.46886	614.78660	560.94762	543.83215	529.31983	522.27174
NT	64060.16211	52084.92725	39482.32471	32700.997[redacted]	25417.01929	22211.36450	18748.43994	14815.81970

TABLE VI-I (cont.)

	100% F CASE 1	75% F CASE 2	50% F CASE 3	37.5% F CASE 4	25% F CASE 5	20% F CASE 6	15% F CASE 7	10% F CASE 8
F	[illegible]	18779.78809	12526.40710	9383.60010	6261.75000	5012.68085	3757.64575	[illegible]
NTOB	[illegible].99219	13946.21033	10752.71692	9041.58716	7194.34827	6377.14795	[illegible].41199	4344.09985
WOSB	54.75289	41.41186	27.79567	20.89211	14.00370	11.26053	8.49772	5.83724
TOSB	77.00000	77.00000	77.00000	77.00000	77.00000	77.00000	77.00000	77.00000
POSTB	38.68461	33.08679	35.31399	36.10839	36.67652	36.84031	36.96933	37.05947
PODTB	[illegible]	129.35648	99.58290	84.01358	68.40187	62.09955	55.66640	49.14834
HOBNC	[illegible]	155.93289	103.40673	77.07722	51.04425	40.64055	30.11457	[illegible]
QOSB	274.58344	207.67070	139.38475	104.76498	70.22204	56.46619	42.61194	29.27088
HOB/N2	-6 71133857	-6 79709741	-6 89436000	-6 94283712	-6 98619752	-6 99932463	-5 10129762	-5 10304253
Q/QDOB	1.02542	.94536	.82295	.73561	.61967	.56213	.49616	.42777
ETAOB	[illegible]	.58669	.55340	.52469	.46923	.43980	.39966	[illegible]
SHPOB	[illegible]	12.87953	9.35868	6.58013	2.76977	1.69189	1.16418	[illegible]
SOB	[illegible]	[illegible].75391	10296.99548	7262.84857	4624.95538	3662.64746	[illegible].34665	[illegible]
PTITOB	5209.73175	3614.05054	2211.03592	1580.51791	1006.53512	789.37332	561.74134	381.59288
DPTOB	6105.28162	3514.23453	2124.76129	1504.02286	941.51119	729.45794	527.29974	333.03475
TTITOB	99.06723	92.49846	86.98738	84.68819	82.52931	81.72102	80.86133	79.90439
WTOB	[illegible]	4.20370	3.25798	2.73681	2.16235	1.90232	1.61662	[illegible]
ETATOB	[illegible]	.46721	.46631	.46614	.46649	.46699	.46736	[illegible]
NTFB	[illegible]	[illegible].73863	10780.34985	9069.22913	7228.72101	6403.91677	5471.73395	[illegible]
WFSB	22.21140	16.67092	11.17493	8.42804	5.68753	4.57073	3.44532	2.26246
TFSB	77.00000	77.00000	77.00000	77.00000	77.00000	77.00000	77.00000	77.00000
PFSTB	10.50599	13.53253	15.69479	16.40156	17.01815	17.18527	17.31871	17.42112
PFDTB	[illegible]	73.63783	83.09728	44.06339	35.21292	31.61139	27.99809	[illegible]
HFBNC	[illegible]	144.86420	96.00809	70.85056	46.70362	37.02994	27.41292	[illegible]
QFSB	[illegible]	[illegible]	89.40101	67.42519	45.50008	36.86417	27.86276	[illegible]
HFB/N2	-6 67887937	-6 75187552	-6 82611804	-6 [illegible]39530	-6 [illegible]	-6 90[illegible].4606	-6 91556581	-6 [illegible]61633
Q/QDFB	.98720	.90211	.78321	.70213	.59446	.53926	.47573	.38194
ETAFB	.58692	.58007	.54414	.50970	.45748	.42649	.38621	.32665
SHPFB	[illegible]	7.68961	3.88403	2.13004	1.05870	.72156	.44462	[illegible]
SFB	[illegible]	[illegible].46753	7349.58917	5143.31898	3248.91980	2573.56589	1896.03427	[illegible]
PTITFB	[illegible]	[illegible].53543	2148.14256	[illegible].92732	940.54523	748.60483	544.69097	[illegible]
DPTFB	5051.74194	3488.20126	2105.68121	1408.00710	928.21423	719.19554	520.01332	329.36840
TTITFB	98.20616	91.80148	86.39091	84.14728	81.88144	81.12515	80.26596	79.41399
WTFB	1.58683	1.28753	.99948	.83982	.66308	.58357	.49617	.39464
ETATFB	[illegible]	.36702	.36871	.36877	.36737	.36849	.36933	[illegible]
SEALS/ WOTS	[illegible]	.36438	.35786	.21665	.16381	.14141	.11757	[illegible]
WOBOS	.00000	.00000	.00000	.00000	.00000	.00000	.00000	.00000
WFBOS	.00000	.00000	.00000	.00000	.00000	.00000	.00000	.00000
WFRTS	.27000	.27000	.27000	.27000	.27000	.27000	.27000	.27000

TABLE VI-II

25K ARES WEIGHT AND INERTIA SUMMARY

COMPONENT ASSEMBLY	Weight Pound	Moment of Inertia About Gimbal Slug Ft^2
TURBOPUMP - INCL. PRIM. COMB & PCFCV HSG ADAPTER & LINE (W/O GIMBAL)	73.62	1.153
SECONDARY INJECT. SUB-ASS'Y & SCFCV	31.27	.931
TPA SUB-TOTAL	104.89	2.084
ϵ = 150 THRUST CHAMBER ASSEMBLY AND NOZZLE EXTENSION	92.45	13.770
ϵ = 50 THRUST CHAMBER ASSEMBLY AND NOZZLE EXTENSION	90.05	9.958
SUB-TOTAL BASIC ENGINE ϵ = 150	197.34	15.854
SUB-TOTAL BASIC ENGINE ϵ = 50	194.94	12.042
BOOST PUMPS (2)	5.0	.0575
PROPELLANT INLET HOUSINGS (2)	8.0	.1465
SUCTION VALVES & ACTUATORS (2)	6.0	.1585
GIMBAL	2.54	.0003
PCFCV ACTUATOR	1.30	.0261
SCFCV ACTUATOR	1.00	.0394
ADDITIONAL ITEMS SUB-TOTAL	23.84	.4283
GRAND TOTAL -		
ϵ = 150 DRY ENGINE ASSEMBLY	221.18	16.2823
ϵ = 50 DRY ENGINE ASSEMBLY	218.78	12.4703
ϵ = 150 WET ENGINE ASSEMBLY	229.58	16.4693
ϵ = 50 WET ENGINE ASSEMBLY	227.28	12.6483

Table VI-II

TABLE VI-III

25K PROTOTYPE PRODUCTION ARES WEIGHT AND INERTIA SUMMARY

	Nozzle Expansion Ratio ϵ	Weight Pound	Moment of Inertia About Gimbal Slug Ft^2
DRY ENGINE	150:1	209.	13.7
	50:1	207.	9.9
ADDITIVE EFFECT	150:1	8.4	.187
OF PROPELLANTS	50:1	8.5	.178
WET ENGINE	150:1	217.4	13.887
	50:1	215.5	10.078

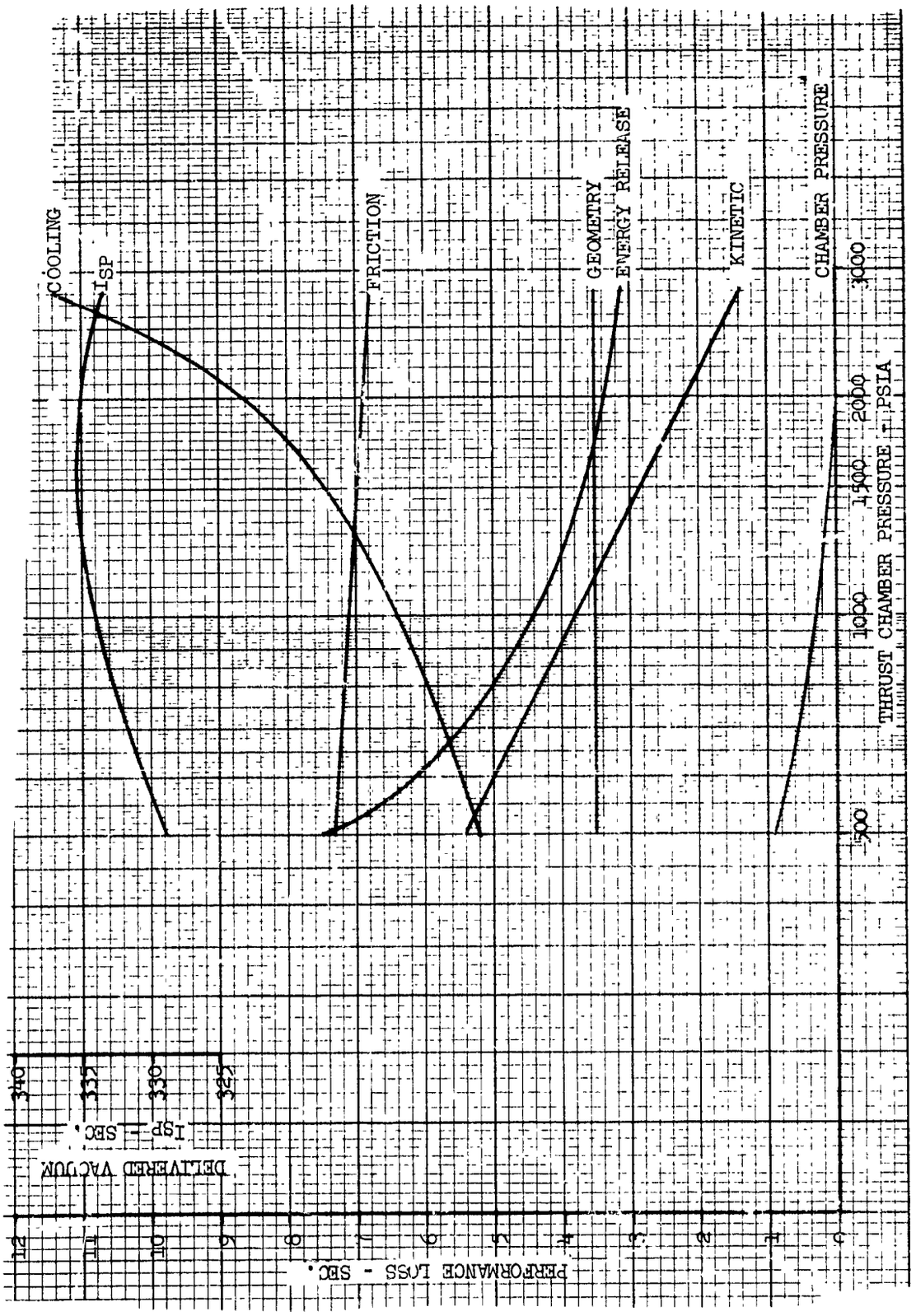

Performance Loss Summary for Different Design Pressures (u)

Figure VI-1

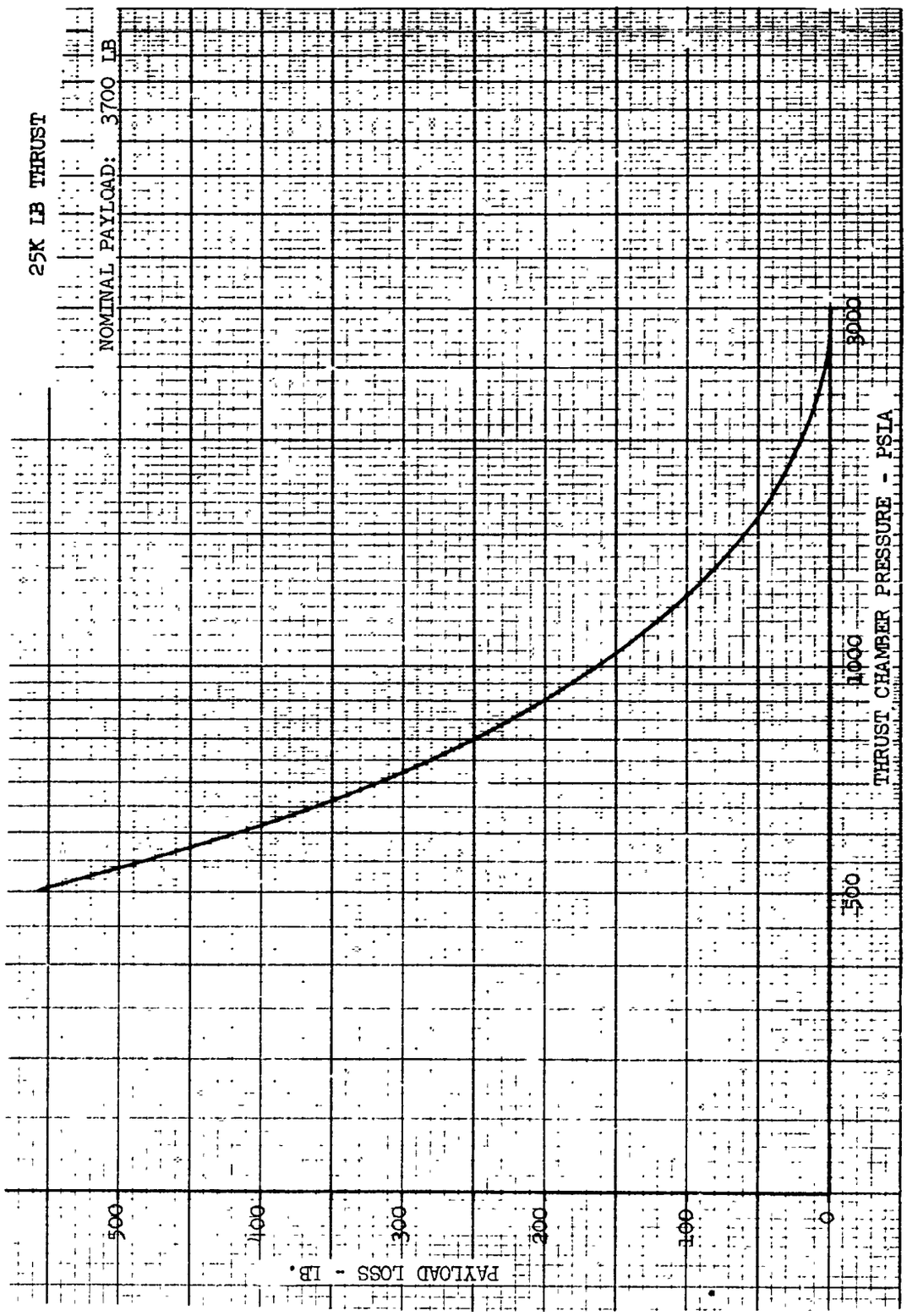

Vehicle Payload Loss for Different Design Pressures (u)

Figure VI-2

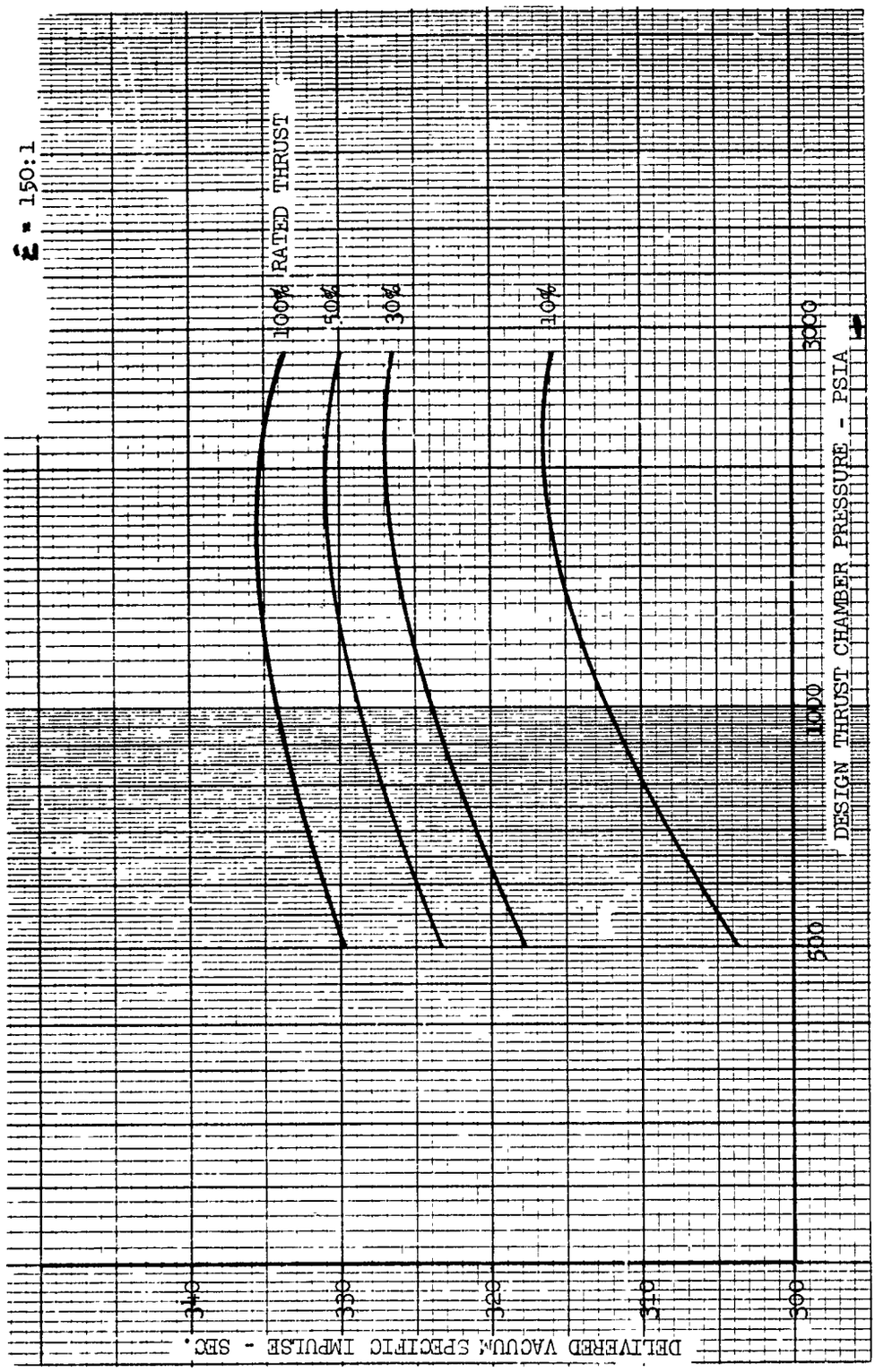

Throttling Performance for Different Design Pressures (u)

Figure VI-3

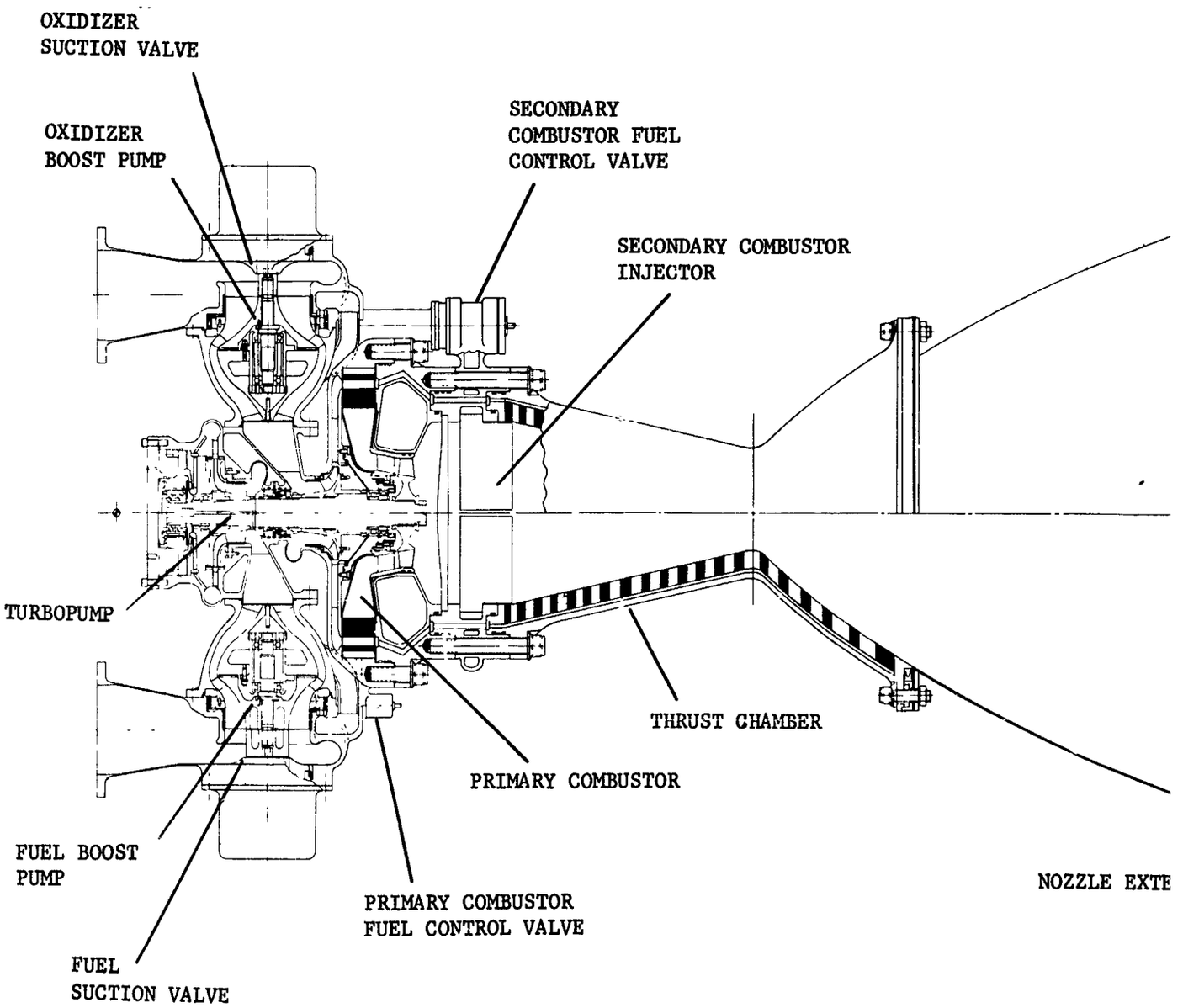
OXIDIZER
SUCTION VALVE
OXIDIZER
BOOST PUMP
SECONDARY
COMBUSTOR FUEL
CONTROL VALVE
SECONDARY COMBUSTOR
INJECTOR
TURBOPUMP
THRUST CHAMBER
PRIMARY COMBUSTOR
FUEL BOOST
PUMP
NOZZLE EXTE
PRIMARY COMBUSTOR
FUEL CONTROL VALVE
FUEL
SUCTION VALVE

1

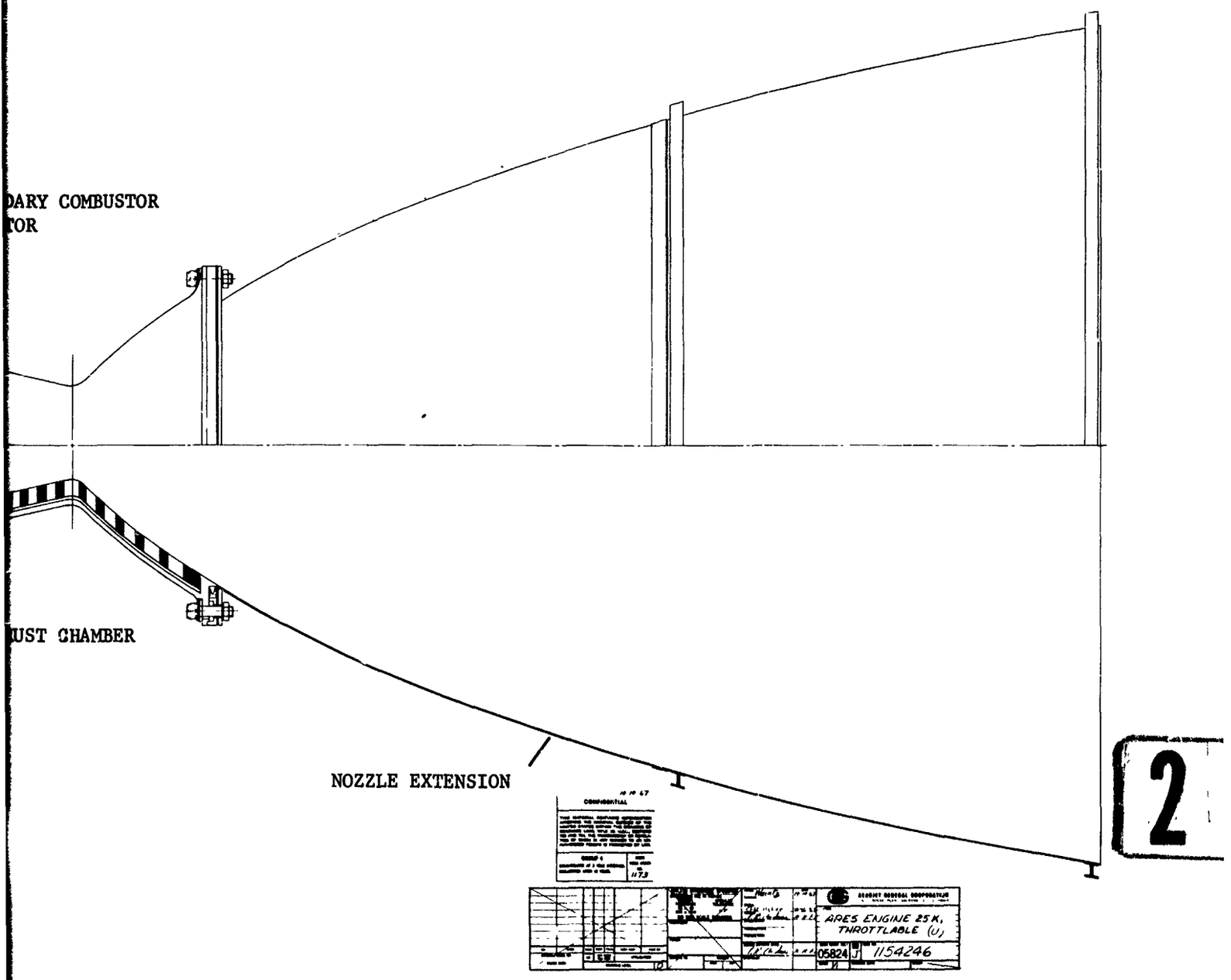

ARES Engine, 25K, Throttlable (u)

Figure VI-4

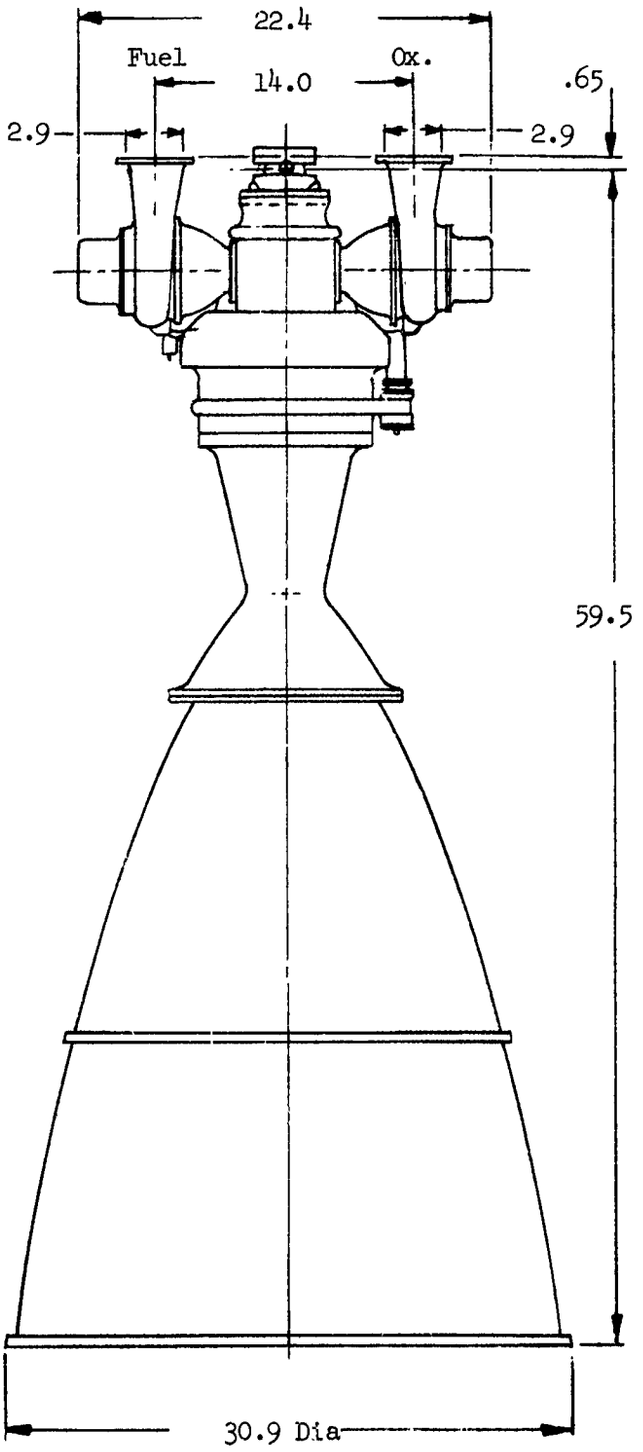

Envelope 25K Throttlable ARES

Figure VI-5

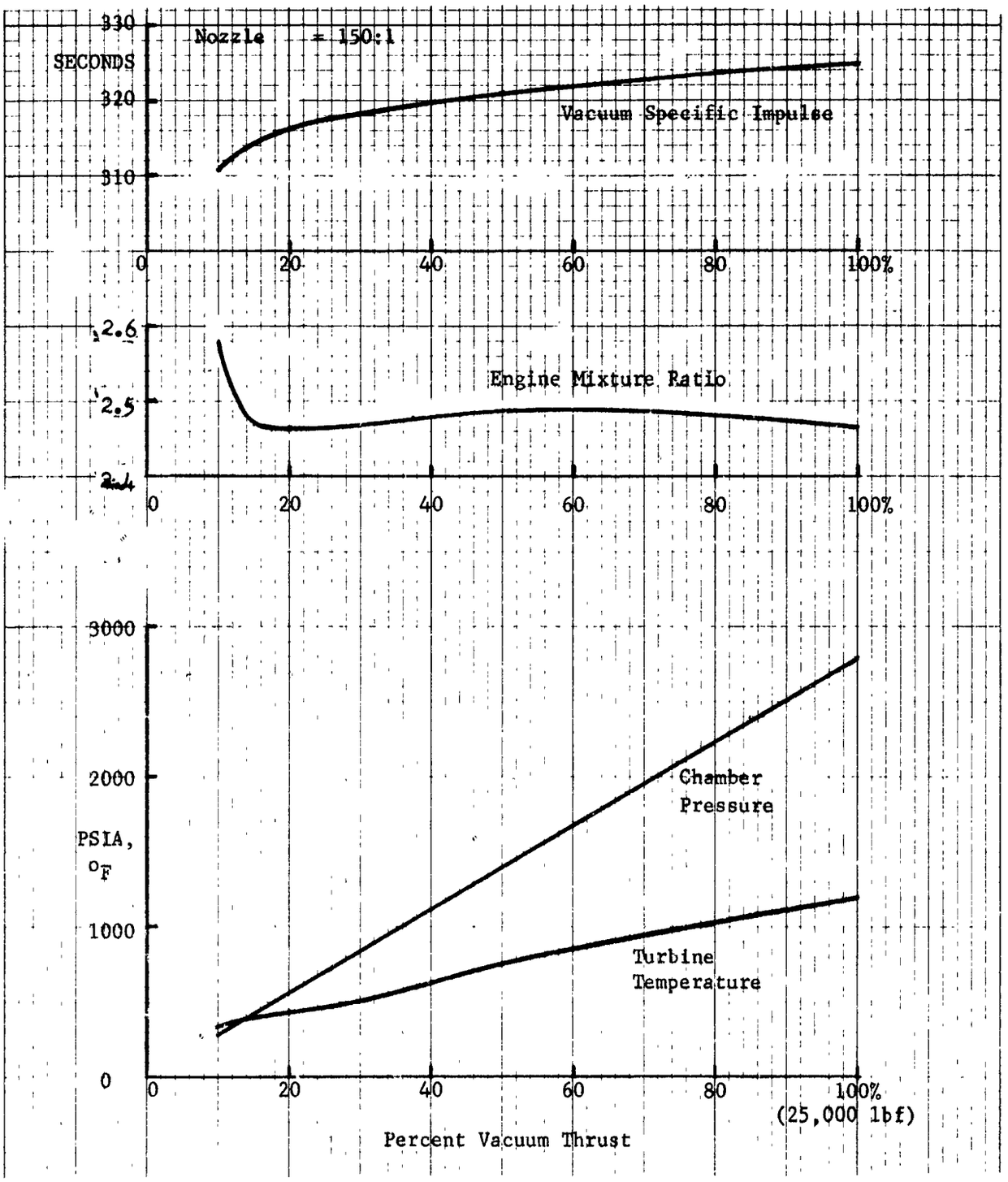

Throttling Performance, 25K ARES (u)

Figure VI-6

VII.

500K ENGINE DESIGN (TASK IV)

A. OBJECTIVE AND APPROACH

(U) The objective of Task IV was to establish an engine design for a throttlable, restartable engine having a throttle range of 5:1 and a thrust of 500,000 lbf using a nozzle with a 50:1 area expansion ratio.

(U) The approach to accomplishing this objective was to (1) establish design criteria and operating characteristics over the throttling range; and (2) prepare a 500K thrust engine design that was based on these criteria. The 500K engine design (Task IV) was completed, and the results are described in the following paragraphs.

B. DESCRIPTION

1. Performance Rating

(C) The 500K engine operating parameters are as follows:

	Sea Level	Vacuum
Thrust, vacuum, lbf	500,000	582,200
Specific impulse, predicted, sec	271.8	316.5
Specific impulse efficiency, %	91.7	91.7
Nozzle area expansion ratio (RAO)	50:1	50:1
Propellants	N_2O_4/AeroZINE 50	
Chamber pressure, psia	2800	
Mixture ratio, injector	2.2	
NPSH, fuel, ft	20	
NPSH, oxidizer, ft	20	

VII, B, Description (cont.)

(U) Specific impulse efficiency for the 500K engine was assumed to be equal to that of the 100K engine. This is a conservative assumption in that the specific impulse efficiency for the 500K engine would be slightly higher than for the 100K engine for a given development level (i.e., maintain chamber wall temperature of 1625°F), because of the reduced cooled area per unit propellant flow.

2. Layout Design

(U) A layout design of the 500K thrust engine with a 50:1 area ratio 80% bell contour nozzle is shown in Figure VII-1.

Engine and component design criteria were established so that critical design parameters would reflect a similar degree of conservatism as in the 100K base-line engine design; e.g., similar values for primary combustor gas temperature bearing DN, seal velocity, shaft stress and chamber wall temperatures were used. The 500K engine functional operation and its start and shutdown sequence are identical to those of the 100K base-line engine.

(C) The platelet injector concept currently being tested in the ARES program, and already described in Section III,B,3 and Figure III-3, was selected for the 500K engine. Injector parameters for the 500K design are as follows:

$\dot{w}_F$, lb/sec	447.7
Injector blade length, total, in.	950.0
$\dot{w}_F$/blade length, lb/sec/in.	0.471
$\dot{w}_{gas}$ injector, lb/sec	1297.2
Net gas area, in.^{2}	164.3
Average gas flow, lb/sec/in.^{2}	7.9
Gross area, in.^{2}	283.0 (ref)
Blade area, total, in.^{2}	118.7 (ref)

VII, B, Description (cont.)

(U) An external envelope drawing of the engine is shown in Figure VII-2. The engine portion of the IAPP for the 500K design is shown in Figure IV-1. The dimensions for the gimbal actuators were scaled from the 100K design.

C. ENGINE THROTTLING PERFORMANCE

(U) Engine thrust is controlled as in the 100K base-line engine by means of the primary combustor fuel control valve. Some of the engine and component performance parameters are plotted in Figure VII-3 with a major list of the operating parameters shown in Table VII-I. The format of the table is the same as described for the 100K engine and shows predicted throttle performance up to 10:1 which is greater than the specified value of 5:1. Symbols are defined in Table III-IV.

(U) The throttling characteristics of the 500K thrust engine are also similar to those already described for the 100K engine. As in the 100K thrust engine, the laminar flow characteristics designed into the transpiration film coolant circuit maintain the coolant flow at a constant percentage of total flow during throttling. Also, the injector ΔP's stay at a reasonable percentage of chamber pressure, due to laminar flow design of the injectors.

(U) The pump and the turbine design efficiencies are three percentage points higher than those of the 100K base-line ARES, due to the larger size and flow of the 500K engine.

D. WEIGHT BREAKDOWN

(U) Calculated dry weight and gimbal moment of inertia values for the 500K engine are shown by component in Table VII-II. Wet weight and inertia values are also shown. Estimated weight and gimbal moment of inertia values for a lower weight production prototype engine are shown in Table VII-III. The lower weight of this production prototype engine, as in the 100K engine, is achieved by using two interface joints between the thrust chamber and turbopump in place of the three as shown in Figure VII-1

TABLE VII-I

THROTTLING PERFORMANCE, 500K ARES (u)

	CASE 1 100% F	CASE 2 75% F	CASE 3 50% F	CASE 4 37.5% F	CASE 5 25% F	CASE 6 20% F	CASE 7 15% F	CASE 8 10% F
F	582175.71875	436393.41016	291303.36719	218724.27930	145703.50000	116733.66699	87454.32031	58228.16406
PCSC	2799.99997	2095.02441	1398.10883	1051.15350	702.68279	564.36742	424.12478	283.80345
MR-ENG	2.42687	2.43866	2.43554	2.42334	2.40918	2.40679	2.42816	2.60470
IS	315.20212	314.97744	313.49121	312.48079	310.80572	309.73687	307.93599	301.91268
W-ENG	1841.15057	1385.47511	929.22338	699.96073	468.79285	376.88012	284.00162	192.86425
WOT	1303.88412	982.51686	658.83408	495.56184	331.34175	266.33807	201.22631	139.38197
WFT	537.27044	402.89266	270.50888	204.49549	137.53282	110.66133	82.87178	53.51163
NT	13150.00049	10718.14661	8162.47955	6789.44916	5283.97412	4628.41663	3907.74713	3086.47961
TTIT	1096.88783	891.87547	673.60403	554.19474	458.39038	430.89723	395.79627	337.11308
RPT	1.50000	1.40884	1.31679	1.26909	1.21816	1.19658	1.17280	1.14790
PODTM	4960.00867	3461.58109	2141.72131	1544.60005	985.90945	776.19733	571.52953	374.22039
DPOH1	51.30066	29.33545	13.25617	7.52068	3.36472	2.17314	1.23904	.59309
DPORG	48.74561	27.88004	12.59988	7.13927	3.19181	2.06130	1.17577	.56473
DPOH2	49.53845	28.32620	12.79910	7.25162	3.24188	2.09361	1.19418	.57357
DPOJPC	200.14465	155.58401	106.93620	81.23877	54.77515	44.16512	33.47173	23.29794
PCPC	4610.27930	3220.45538	1996.11995	1441.44972	921.33588	725.70417	534.44881	349.19107
PFDTM1	4949.95093	3449.48401	2117.51849	1516.91713	958.48387	750.75097	548.39295	353.59954
DPSCVI	109.93328	65.53540	31.45087	18.61525	8.73144	5.74174	3.28084	1.40235
DPFSCV	1544.96600	917.13364	438.87842	259.44547	121.61027	79.95016	45.67428	19.51979
DPSCVO	109.99136	65.27618	31.23039	18.46344	8.65256	5.68834	3.24961	1.38877
DPFJSC	300.01028	242.91541	175.40739	137.28944	95.47537	77.87074	59.18822	38.86982
PCFACE	2885.00000	2158.62338	1440.55142	1083.06352	724.01424	581.50000	437.00000	292.41891
PFDTM2	5560.38672	4014.14615	2506.31531	1806.68343	1144.71716	896.84180	654.95000	421.75500
DPFPCV	499.11737	524.26910	370.27890	273.92432	170.63549	130.50314	93.56789	57.89022
DPPCVO	48.74609	20.91409	6.60452	2.97223	1.00756	.56664	.26402	.08313
DPFJPC	300.97406	203.13034	118.36900	80.80164	47.91116	36.22704	24.90013	14.08244
PCPC	4610.27930	3220.45538	1996.11995	1441.44972	921.33588	725.70417	534.44881	349.19107
PTIT	4485.00000	3132.94305	1941.87758	1402.27991	896.29959	705.[illegible]3396	519.92575	339.70218
PTET	3035.20193	2251.78281	1489.29012	1114.33362	741.04685	593.90454	445.27525	297.20539
PGJT	2998.15683	2228.72607	1477.19843	1106.56026	736.80888	590.80270	443.20989	296.01189
PCFACE	2885.00000	2158.62338	1440.55142	1083.06352	724.01424	581.50000	437.00000	292.41891
KWFSCV	11.82109	11.82109	11.82109	11.82109	11.82109	11.82109	11.82109	11.82109
KWFPCV	4.56421	2.91727	1.95078	1.52154	1.12244	.96251	.77592	.55355
KWOPCV	138.41774	138.41774	138.41774	138.41774	138.41774	138.41774	138.41774	138.41774
KWFCV	2.21685	2.09056	1.89927	1.75425	1.54902	1.43810	1.29732	1.12576

NOTE: Values less than unity have their decimal location noted by prefix. Example: "-5" indicates decimal point is 5 places to the left of first digit. No prefix and no decimal point indicate decimal precedes first digit.

TABLE VII-I (cont.)

	CASE 1 100% F	CASE 2 75% F	CASE 3 50% F	CASE 4 37.5% F.	CASE 5 25% F	CASE 6 20% F	CASE 7 15% F	CASE 8 10% F
F	582175.71875	436393.41016	291303.36719	218724.27930	145703.50000	116733.66699	87454.32031	58228.16406
DP/PSF	.10399	.11253	.12176	.12676	.13187	.13391	.13544	.13293
DP/PPO	.04341	.04831	.05357	.05636	.05945	.06086	.06263	.06672
DP/PPF	.06528	.06308	.05930	.05606	.05200	.04992	.04659	.04033
PCSC	2799.99997	2095.02441	1398.10883	1051.15350	70[illegible]8279	564.36742	42[illegible].12478	283.80345
MRSC	2.20000	2.21147	2.20830	2.19690	[illegible].18365	2.18141	2.20150	2.36594
AE/[illegible]	50.00000	50.00000	50.00000	50.00000	50.00000	50.00000	50.00000	50.00000
ETAC	.96247	.96053	.95862	.95766	.95669	.95634	.95597	.95550
ETAN	.95104	.94986	.94713	.94448	.93972	.93665	.93220	.92526
C*SC	5480.44446	5449.25854	5422.10474	5411.77234	5401.63696	5396.42023	5381.70496	5302.89453
CF	1.85633	1.85972	1.86021	1.85776	1.85127	1.84668	1.84097	1.83178
WGJSC	1278.94670	954.33784	632.93587	473.10936	314.20258	251.82322	189.55[illegible]26	130.59899
WFJSC	440.32151	339.46437	234.89168	180.60997	123.62963	100.23557	75.75590	49.51881
WOFC	121.88640	91.60735	61.51545	46.33802	31.04238	24.94062	18.78295	12.77581
WFC/WT	.06620	.06612	.06620	.06620	.06622	.06618	.06614	.06624
WORG	1172.04927	883.01973	591.52771	444.52381	296.75581	238.34072	179.907[illegible]7	124.62481
DPFJSC	300.01028	242.91541	175.40739	137.28944	95.47537	77.87074	59.18822	38.86982
DPOFC	2108.70804	1337.22122	730.34631	485.92537	279.86194	209.65678	146.16571	89.82385
DPORG	46.74561	27.88004	12.59988	7.13927	3.19181	2.06130	1.17577	.56473
DTORG	.00000	.00000	.00000	.00000	.00000	.00000	.00000	.00000
D*FJSC	55.90041	56.00396	56.06870	56.08322	56.08430	56.08872	56.08768	56.08277
D*OFC	89.45516	89.60197	89.62940	89.59944	89.54392	89.51778	89.48966	89.46956
D*ORG	91.78193	91.08536	90.44482	90.14410	89.85905	89.75434	89.65495	89.57135
MRPC	12.08935	13.92154	16.60792	18.61060	21.34444	22.86075	25.28251	31.21216
WOJPC	1172.04927	883.01973	591.52771	444.52381	296.75581	238.34072	179.90737	124.62481
WFJPC	96.94893	63.42829	35.61721	23.88552	13.90319	10.42576	7.11588	3.99283
D*OJPC	91.49957	90.87681	90.30871	90.04339	89.79294	89.70161	89.61542	89.54412
D*FJPC	56.28949	56.19021	56.13473	56.10970	56.09104	56.08863	56.08153	56.07864
POT	37.14000	37.14000	37.14000	37.14000	37.14000	37.14000	37.14000	37.14000
PFT	17.51000	17.51000	17.51000	17.51000	17.51000	17.51000	17.51000	17.51000
NPSPOB	12.42943	15.49935	17.71904	18.50652	19.07387	19.23620	19.36339	19.45140
NPSPFB	7.79128	10.82617	12.97925	13.74256	14.30586	14.47217	14.60816	14.71208
NPSPOM	138.42462	112.89127	83.43994	67.91281	51.86063	45.30461	38.56002	31.73561
NPSPFM	81.25537	66.91592	50.38577	41.70399	32.85805	29.28052	25.58043	21.84070

TABLE VII-I (cont.)

	CASE 1 100% F	CASE 2 75% F	CASE 3 50% F	CASE 4 37.5% F	CASE 5 25% F	CASE 6 20% F	CASE 7 15% F	CASE 8 10% F
F	582175.71875	436393.41016	291303.35715	218724.27930	145703.50000	116733.66699	87[illegible]34.32031	58228.18406
ETAT	.774.7	.77927	.78366	.78433	.78090	.77592	.76633	.75112
WTI	1268.99825	946.44805	627.14494	465.40934	310.65902	248.76649	187.02326	128.61765
U/C-GT	.59526	.57919	.55308	.53230	.50119	.48300	.46011	.43807
SHPT	48438.86377	25518.50806	10807.84692	6034.88660	2721.20715	1788.69569	1043.82521	495.91229
SHPOM	27897.45386	14697.93286	6224.85284	3472.40668	1565.[illegible]9299	1027.45432	600.90326	285.57560
SHPFM1	19743.55786	10390.11340	4407.94061	2465.83414	1110.67703	734.32286	429.75761	202.12499
SHPFM2	786.37576	434.48064	177.62588	96.82753	43.16621	29.42632	16.80270	8.20289
PDSTM	157.06396	131.28146	101.64463	86.00857	69.86436	63.26987	56.48166	49.59287
PDDTM	4960.00867	3461.58109	2141.72131	1544.60005	985.90945	726.19733	471.52953	374.22039
HDMNC	7735.72900	5362.37317	3283.81116	2347.82974	1474.43765	1147.80597	829.51756	522.63060
QDSM	7069.18433	5364.72314	3643.80295	2771.54666	1987.81558	1534.91490	1178.25801	833.06094
HDM/N2	-4 44735237	-4 46678580	-4 49287178	-4 50932795	-4 52808647	-4 53584309	-4 54321615	-4 54861943
Q/QDDM	1.00005	.93112	.83044	.75939	.66462	.61692	.56091	.50210
ETADM	.71000	.70912	.69664	.67916	.64426	.62132	.59004	.55244
NSD	1340.40051	1252.78238	1135.83698	1059.73129	964.87425	919.49220	867.81580	814.99649
SDM	19163.11133	15358.12317	12480.77307	10571.96216	8312.88135	7266.32843	6065.98145	4862.33876
D*DSM	89.40607	89.43027	89.44477	89.449[illegible]9	89.45380	89.45587	89.45877	89.46815
PFSTM1	84.06952	69.70639	53.15444	44.46239	35.40648	32.02465	28.32009	24.57653
PFDTM1	4949.95093	3449.48401	2117.51849	1516.91713	958.49387	750.75097	549.39298	353.89964
HFMNC1	12498.40942	8676.57349	5301.18945	3780.40692	2369.27271	1844.19328	1334.34163	844.33856
QFSM1	4590.47052	3474.22467	2370.83172	1818.37242	1255.26131	1028.10345	792.18079	541.41938
HF1/N2	-4 72277513	-4 75528195	-4 79866288	-4 82010500	-4 84858173	-4 86087785	-4 87380418	-4 88631945
Q/QDF1	1.00001	.92857	.83206	.76723	.68353	.63632	.58071	.50251
ETAFM1	.66000	.65904	.64776	.63338	.60514	.58868	.55952	.51392
NSF-1	753.72581	702.72819	639.72658	600.51265	551.27722	527.34654	498.17298	458.50379
SFM1	16225.95105	13310.58215	10360.53845	8697.62646	6725.49121	5813.02795	4767.53461	3504.94846
D*FSM1	56.06253	56.07125	56.07872	56.08201	56.08533	56.08677	56.08826	56.08945
PFSTM2	4608.19171	3255.22385	2028.35455	1465.12433	934.32221	734.75762	539.08336	349.40041
PFDTM2	5560.38672	4014.14615	2506.31531	1906.69343	1144.71716	896.84180	654.95000	421.78500
HFM2	2425.38522	1937.56052	1222.91722	874.85883	539.44623	415.72739	297.28697	185.71429
QFSM2	820.14299	555.87757	335.69593	242.50753	143.03230	135.29910	108.88396	93.93766
HF2/N2	-4 14025850	-4 16866147	-4 18354935	-4 18978806	-4 19320575	-4 19406345	-4 19468073	-4 19494786
Q/QDF2	1.00019	.83142	.65898	.57218	.49417	.46818	.44824	.43858
ETAFM2	.58011	.56695	.52721	.49916	.46760	.45006	.43801	.43193
NSF-2	1089.64511	965.30241	723.19170	657.26989	602.74896	584.745[illegible]	569.84309	562.09261
NT	13150.00349	10718.14661	8162.47955	6789.44916	5283.97412	4628.41663	3907.74713	3086.47961

TABLE VII-I (cont.)

	CASE 1 100% F	CASE 2 75% F	CASE 3 50% F	CASE 4 37.5% F	CASE 5 25 % F	CASE 6 20% F	CASE 7 15% F	CASE 8 10% F
F	582175.71875	436393.41016	291303.36719	218724.27930	145703.50000	116733.06699	87454.32031	58224.16406
NTOP	3499.99985	2383.09244	2240.40137	1895.04913	1513.37851	1342.86269	1145.52696	910.41880
WOSB	1303.88412	982.51686	658.83408	495.56184	331.34175	266.33807	201.22631	139.38197
TOSB	77.00000	77.00000	77.00000	77.00000	77.00000	77.00000	77.00000	77.00000
POSTB	30.05457	33.11683	35.53099	36.11651	36.68245	36.84437	36.97124	37.05903
POOTB	159.86940	132.89723	102.42997	86.43775	70.06439	63.40210	56.55988	49.63177
HOBNC	211.79222	160.69383	107.96020	80.96452	53.70360	42.72976	31.51637	20.22870
COSB	6538.92426	4927.08856	3303.80310	2485.02982	1661.52460	1335.55864	1009.05286	698.93230
HOB/N2	-4 17289162	-4 19332235	-4 21509593	-4 22545180	-4 23450752	-4 23695575	-4 24017374	-4 24405373
Q/QOOB	1.00695	.92109	.77480	.70677	.63174	.53604	.47476	.41377
ETAOB	.67065	.67208	.63217	.58992	.52561	.48939	.44438	.39509
SHPOB	738.38632	426.73829	204.57047	123.66301	61.54060	42.28679	25.94812	12.97528
SOB	29926.94019	18134.72333	10437.68335	7411.35016	4731.28141	3740.08395	2759.52490	1819.08997
PTITOB	4798.47528	3349.77283	2073.37610	1495.79399	955.29849	752.38719	554.33801	363.39041
OPTOB	4688.30713	3245.09680	1983.63573	1416.53569	898.44530	691.05991	498.96279	314.32687
TTITOB	90.40896	86.53133	83.37176	82.03994	80.30665	80.30189	79.77089	79.09313
WTOB	104.37793	86.48632	67.36715	56.82997	44.93338	39.60519	33.63432	26.88292
ETATOB	.52960	.52936	.52904	.52900	.52924	.52940	.52947	.52949
NTFB	3499.99985	2881.93088	2237.02579	1891.27490	1510.74384	1341.73653	1145.70647	911.64976
WFSC	537.27044	402.89266	270.50888	204.49549	137.53292	110.66133	82.87178	55.51163
TFSB	77.00000	77.00000	77.00000	77.00000	77.00000	77.00000	77.00000	77.00000
PFSTB	10.50599	13.53995	15.62238	16.45546	17.01960	17.18485	17.32080	17.42469
PFDTB	86.63424	71.17560	53.83860	44.86510	35.79830	32.15332	28.39849	24.61222
HFBNC	196.55954	147.94633	97.91739	72.92410	48.20507	38.42209	28.42979	18.44940
QFSB	4299.37427	3223.24051	2164.10962	1635.98552	1100.27341	889.29848	662.97957	428.09624
HFB/N2	-4 16045678	-4 17313000	-4 19566710	-4 20387397	-4 21120834	-4 21342562	-4 21658430	-4 22198636
Q/QOFB	.98587	.89782	.77659	.69439	.58464	.52967	.46452	.37696
ETAFB	.67619	.66751	.62419	.58331	.52125	.48498	.43640	.36347
SHPFB	282.31024	162.35846	77.15441	46.68269	23.12564	15.94326	9.81596	4.93861
SFB	24263.85915	13518.43188	7504.64520	5285.08301	3359.42410	2653.20917	1946.86848	1238.23518
PTITFB	4824.89033	3362.74323	2064.62189	1479.22108	934.88103	732.37735	535.10414	345.19727
OPTFB	4778.95319	3314.63574	2021.34456	1440.48341	901.93805	702.11332	507.80700	321.08073
TTITFB	90.39298	86.52395	83.15890	81.74394	80.40964	79.86502	79.31976	78.85933
WTFB	29.65510	24.66287	18.23520	16.22819	12.83406	11.32128	9.62635	7.65306
ETATFB	.43062	.42814	.42669	.42687	.42863	.42987	.43062	.43071
WJTS	9.94847	7.88979	5.79093	4.70002	3.54337	3.05674	2.53600	1.98135
WOBOS	.00000	.00000	.00000	.00000	.00000	.00000	.00000	.00000
WFBOS	.00000	.00000	.00000	.00000	.00000	.00000	.00000	.00000
WFRTS	6.50000	6.50000	6.50000	6.50000	6.50000	6.50000	6.50000	6.50000

TABLE VII-II

500K ARES WEIGHT AND INERTIA SUMMARY

COMPONENT ASSEMBLY	Weight Pound	Moment of Inertia About Gimbal Slug Ft^2
TURBOPUMP - INCL. PRIM. COMB & PCFCV HSG ADAPTER & LINE (W/O GIMBAL)	2614.0	603.8
SECONDARY INJECT. SUB-ASS'Y & SCFCV	578.0	382.6
TPA SUB-TOTAL	3192.0	986.4
ϵ = 150 THRUST CHAMBER ASSEMBLY AND NOZZLE EXTENSION	1681.0	4984.5
ϵ = 50 THRUST CHAMBER ASSEMBLY AND NOZZLE EXTENSION	1662.0	2955.1
SUB-TOTAL BASIC ENGINE ϵ = 150	4873.0	5970.9
SUB-TOTAL BASIC ENGINE ϵ = 50	4854.0	3941.5
BOOST PUMPS (2)	390.0	96.0
PROPELLANT INLET HOUSINGS (2)	670.0	224.0
SUCTION VALVES & ACTUATORS (2)	320.0	185.5
GIMBAL	211.0	.57
PCFCV ACTUATOR	12.0	4.30
SCFCV ACTUATOR	9.0	5.17
ADDITIONAL ITEMS SUB-TOTAL	1612.0	515.54
GRAND TOTAL -		
ϵ = 150 DRY ENGINE ASSEMBLY	6485.0	6486.44
ϵ = 50 DRY ENGINE ASSEMBLY	6466.0	4457.04
ϵ = 150 WET ENGINE ASSEMBLY	7183.0	6708.44
ϵ = 50 WET ENGINE ASSEMBLY	7167.0	4676.04

Table VII-II

TABLE VII-III

500K PROTOTYPE PRODUCTION ARES WEIGHT AND INERTIA SUMMARY

	Nozzle Expansion Ratio ϵ	Weight Pound	Moment of Inertia About Gimbal Slug Ft^2
DRY ENGINE	150:1	6130.	6341.
	50:1	6110.	4312.
ADDITIVE EFFECT OF PROPELLANTS	150:1	698.	222.
	50:1	701.	219.
WET ENGINE	150:1	6828.	6563.
	50:1	6811.	4531.

1

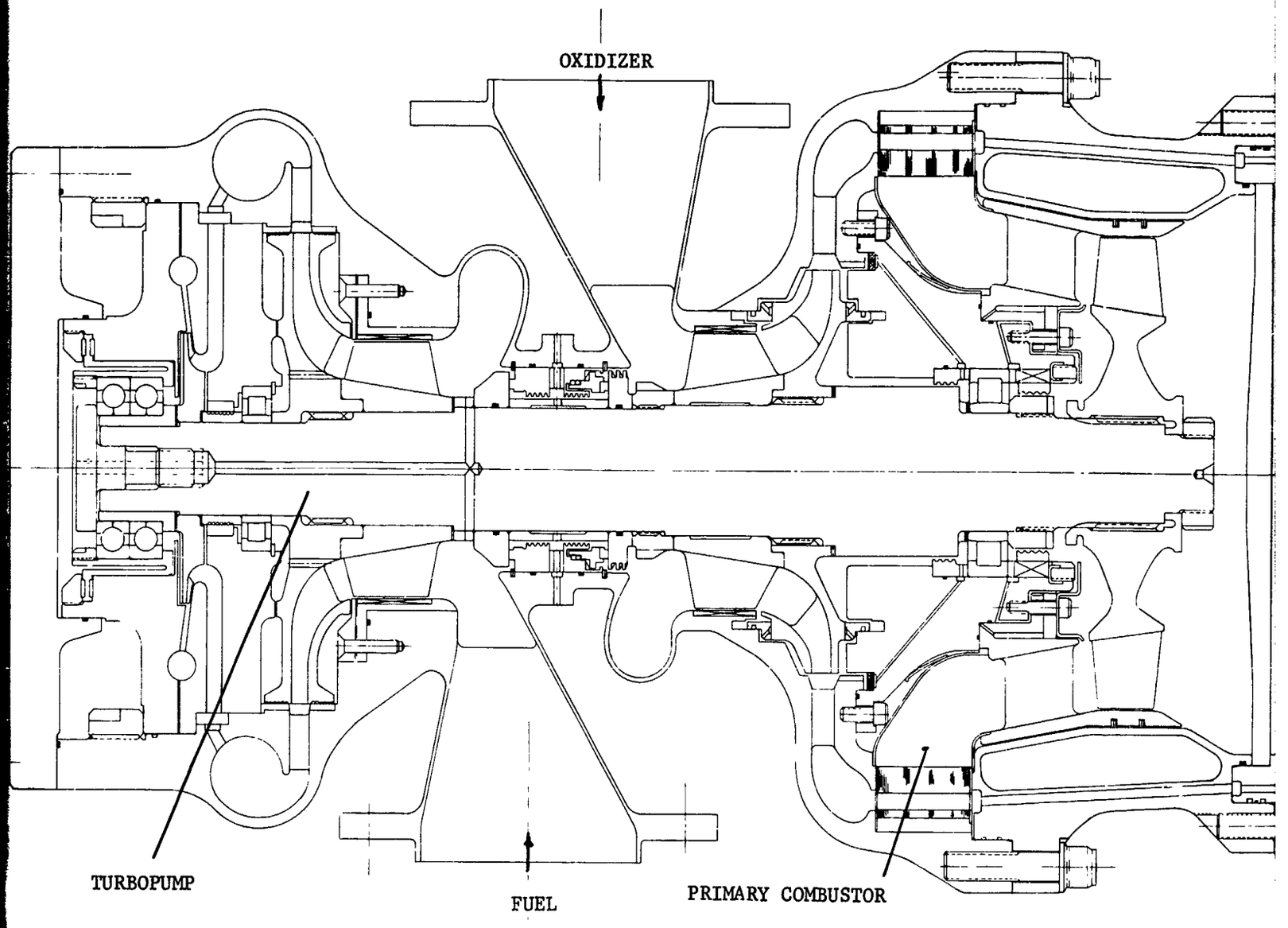

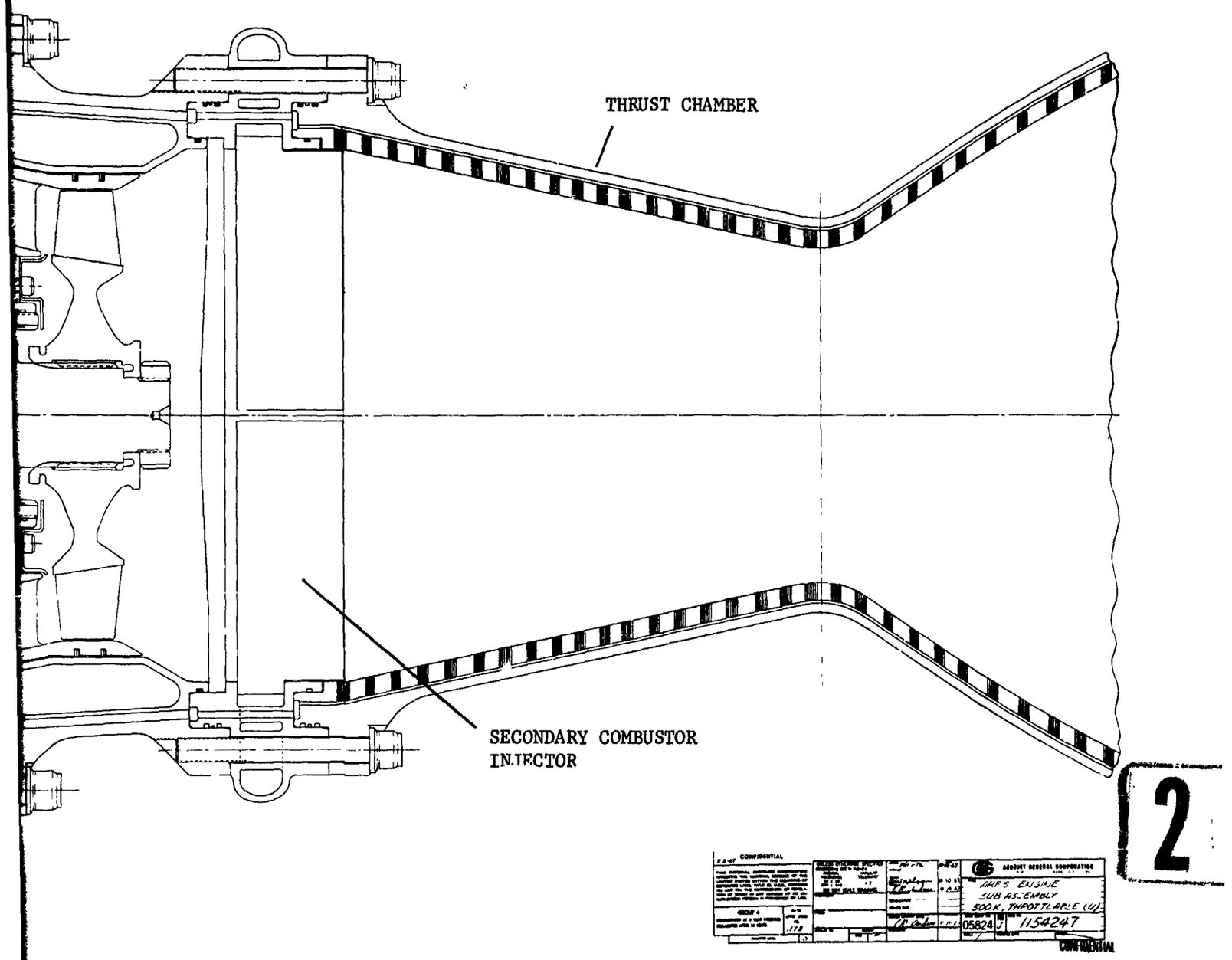

ARES Engine, 500K, Throttlable (u)

Figure VII-1

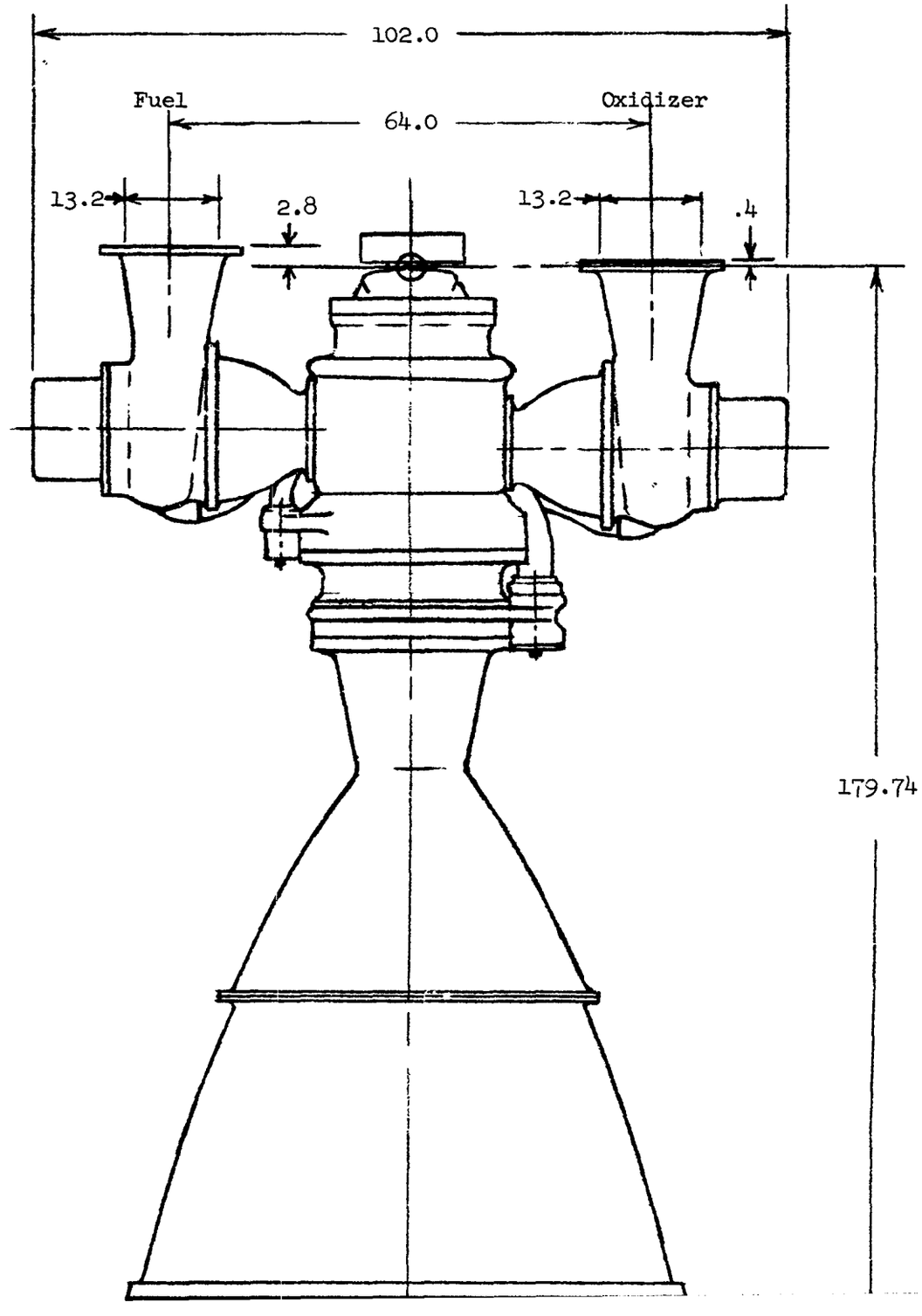
102.0
Fuel
Oxidizer
64.0
13.2
2.8
13.2
.4
179.74

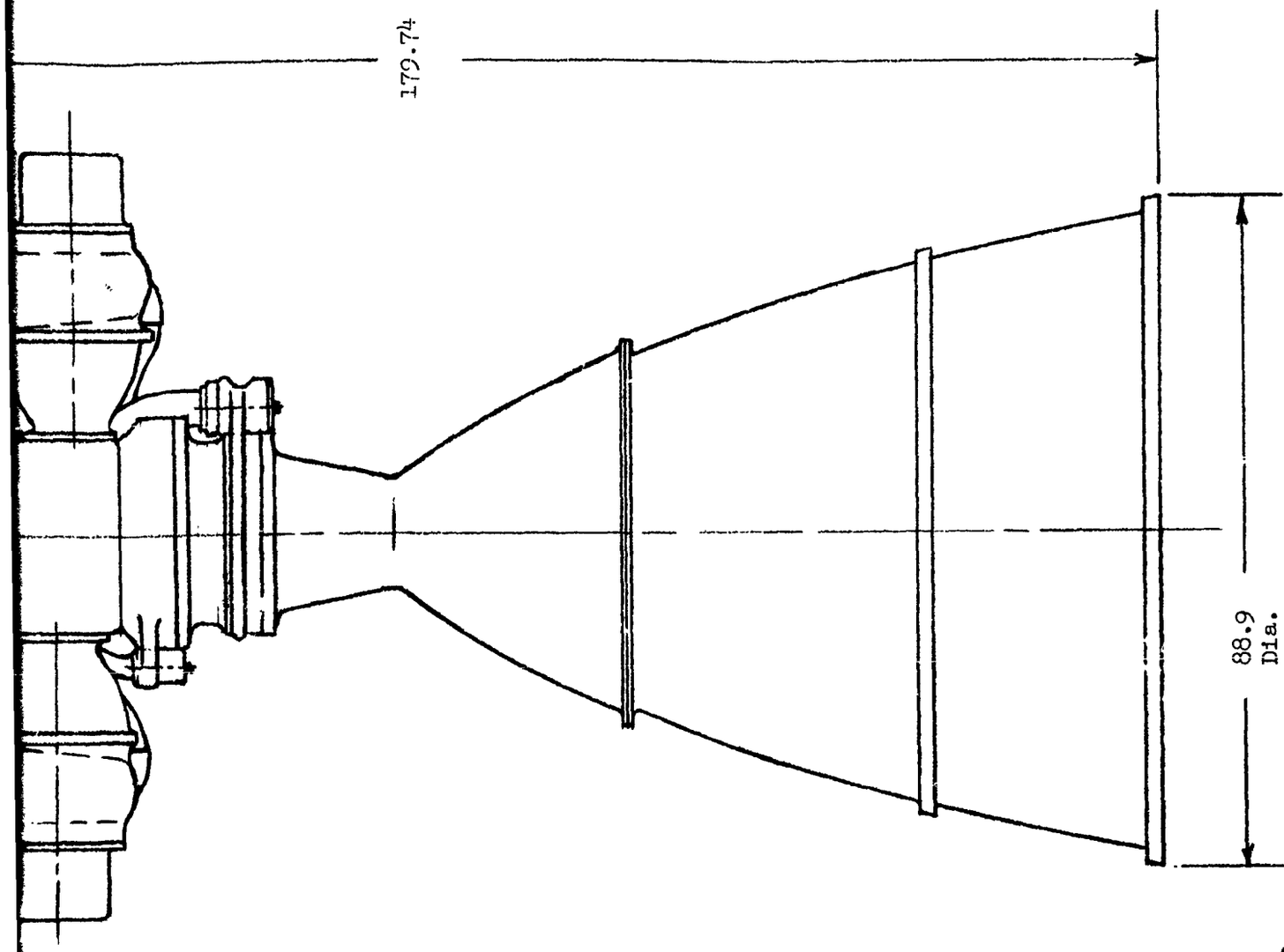

2

Envelope, 500K, Throttlable ARES

Figure VII-2

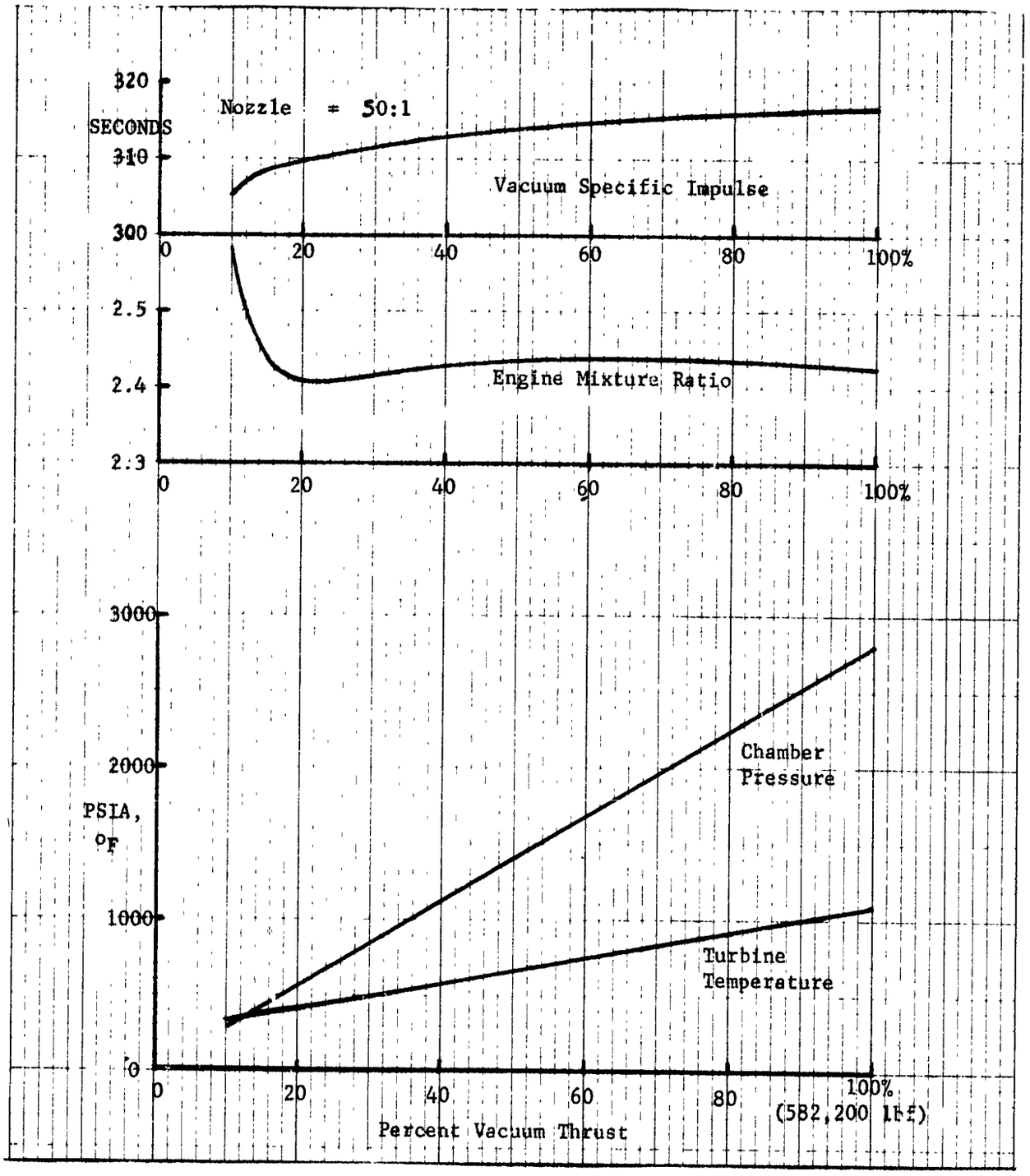

Throttling Performance, 500K ARES (u)

Figure VII-3

VIII.

ENGINE THRUST SCALING (TASK V)

A. OBJECTIVE AND APPROACH

(U) The objective of Task V was to establish engine thrust scaling data for ARES cycle engines over a range of design point thrust values of 25,000 to 500,000 lbf. The scaling data are presented in Appendix I and include engine weight, length, diameter, specific impulse, development and production costs. Data for this thrust scaling task were obtained from the 100K, 25K and 500K engine designs described in Sections III, VI, and VII, respectively. The technical approach to defining performance of these engines with various area ratio nozzles and under throttled conditions is described in Section VIII,B. Engine weight figures are based on the estimated values for the production prototype ARES configuration. Engine development and production cost figures have been estimated for a man-rated ARES with cost figures in terms of the 1967 dollar. Cost figures are based on estimated component costs for experimental production quantities. These component cost figures are used in the development program cost estimate where the development program was assumed to be of four years duration involving three years through PFRT and one year for qualification. Production cost figures were established from experimental component costs by applying cost adjustment factors obtained from Aerojet-General Corporation experience on Titan programs. The man-rated engine cost is priced a factor of 1.6 higher than an unmanned utilization, this factor being based on cost data from Titan IIIB and Gemini engine production deliveries. Fee is not included in the cost estimate.

B. PERFORMANCE SCALING

(C) All engine performance scaling starts from the basic contract AF 04(611)-10830 ARES engine with an 80% bell nozzle and an expansion ratio of 20:1. The target performance of this engine is 91.7% of theoretical sea-level

specific impulse. The performance loss breakdown of this engine together with the rather detailed analysis conducted on the 25K design as part of Task III (see Section VI,B) provide the design information necessary to scale the individual losses to the various area ratios and thrust levels.

(U) Performance of the 500K engine is defined as being equal to that of the 100K; therefore, the performance curves compiled are based on 25K and 100K each with RAO nozzles of 20, 50, 150, and 300:1 area ratios and 80% bell nozzles of 20 and 50:1 area ratios. The performance breakdown of the base-line engine differs from that of the ARES engine in that the cooling losses are consistent with the conical chamber design, and the nozzle is transpiration cooled to the 30-psia point in the nozzle. Similarly, the energy release loss has been calculated for the conical chamber and the remaining combustion loss attributed to mixture ratio distribution.

(U) The individual performance losses were calculated in the same manner as described in Section VI,B. Conversion of the 80% bell nozzle at 20:1 area ratio to a RAO nozzle of the same area ratio requires only determination of the new nozzle friction and geometry losses. Conversion of either of these, then, to larger area ratios involves referencing the percents of energy release and mixture ratio distribution losses to the higher theoretical I_s values. This is an approximation necessitated by the fact that the exact nature of the injector which determines this loss is unknown. The nozzle friction or boundary layer and geometry losses can be calculated for changes in area ratio. Scaling of this loss was done on the basis of the data presented in Reference (5). Cooling losses are assumed to be constant with changes in area ratio. Kinetic or finite rate losses were scaled with the use of Reference (5).

VIII, B, Performance Scaling (cont.)

(U) Scaling for changes in thrust was done in the following manner. Mixture ratio distribution, nozzle geometry, and kinetic losses were all taken to be constant with changes in thrust. Cooling and energy release losses were calculated for the particular chamber geometry, and boundary layer losses were scaled using Reference (5).

(U) The results of this performance scaling effort can be seen in Figure III-2 in Appendix I which shows the vacuum and sea-level delivered specific impulse as a function of area ratio for two thrust levels, 25K lb and 100K lb. Table VIII-I shows the loss breakdown summary for the 100K engine at three area ratios and the 25K at two area ratios. The 500K delivered impulse is shown equal to the 100K; consequently, no loss breakdown is shown. Finally, Figure III-3 in Appendix I shows the vacuum performance of both 150:1 and 300:1 RAO nozzle engines during throttling. Also shown is the performance of the 100K and 500K thrust engine with a 50:1 bell nozzle. To arrive at these curves the individual performance loss changes with thrust and chamber pressure were handled as follows: mixture ratio distribution was assumed constant; energy release loss was calculated for changes in P_c; boundary layer and kinetic losses were scaled with P_c; geometry losses are constant; and the cooling loss was taken to be constant on the basis of studies previously performed on the ARES engine Contract AF 04(611)-10830.

REFERENCES

1. Advanced Rocket Engine--Storable (U), Phase I Interim Final Report, Volume III Appendix, Section 9, "Backup Turbopump Assembly," AFRPL-TR-67-75, Contract AF 04(611)-10830, Aerojet-General Corporation, August 1967, Confidential.

2. Kenny, R. M., Freedman, P., Lane, A. P., and Bingham, P., Development and Demonstration of Main Tank Injection (MTI) Pressurization System, Final Report, Technical Documentary Report No. RTD-TDR-63-1123, December 1963; prepared for Air Force Flight Test Center, Edwards AFB, California, under Contract AF 04(611)-8198, by The Martin Company, Denver Division.

3. Stollery, J. L., and El-Ehwany, A. A. M., "A Note on the Use of a Boundary-Layer Model for Correlating Film Cooling Data"; Int. Journal of Heat-Mass Transfer, Vol. 8, pp 55-65, 1965.

4. Kushida, R., "Nonequilibrium Chemical Recombination Effects in Exhaust Nozzle Flow, an Approximate Method," Liquid Rockets and Propellants, Vol. 18, July 1960.

5. Performance Evaluation Methods for Liquid Propellant Rocket Thrust Chambers, Chemical Propulsion Information Agency Publication No. 132, November 1966.

3

TABLE VIII-I

ARES THRUST CHAMBER PERFORMANCE SUMMARY (u)

Engine Rating, lbf	100K	100K	100K	25K	25K	500K	500K
Area Ratio	20:1	50:1	150:1	50:1	150:1	50:1	150:1
Nozzle Contour	80% Bell	80% Bell	RAO	80% Bell	RAO	80% Bell	RAO
Loss Breakdown, sec (for conical chamber)							
Mixture Ratio Dist.	5.2	5.5	5.7	5.5	5.7		
Combustion	1.0	1.1	1.1	1.1	1.1		
Nozzle Friction	3.1	4.4	5.8	3.6	6.8		
Nozzle Geometry	2.9	3.1	3.5	3.1	3.5		
Transpiration Cooling	13.7	13.7	13.7	16.5	16.5		
Kinetic (Recombination)	0.0	0.9	1.4	0.9	1.4		
Total Losses	25.9	28.7	31.2	30.7	35.0		
Sea Level Performance							
Thrust, lbf	100,000*	94,760		20,625		500,000*	
I_s theo, sec	310.9	298.7		298.7		298.7	
I_s act., sec	285.0	270.0		268.0		271.8	
$\eta_{IS(SL)}$, %	91.67	90.4		89.7		91.0	
Vacuum Performance							
Thrust, lbf	106,550	111,065	115,250	24,200	25,000*	582,200	604,100
I_s theo, sec	329.5	345.2	359.6	345.2	359.6	345.2	359.6
I_s act, sec	303.6	316.5	328.4	314.5	324.6	316.5	328.4
$\eta_{IS(vac)}$, %	92.0	91.7	91.2	91.1	90.3	91.7	91.2

*Rated Thrust

Report 68-C-0008-F, Part 1

Unclassified
Security Classification

DOCUMENT CONTROL DATA - R&D
(Security classification of title, body of abstract and indexing annotation must be entered when the overall report is classified)

1 ORIGINATING ACTIVITY (Corporate author) Propulsion Division, Sacramento Facility P.O. Box 15847 Sacramento, California 95813	2a REPORT SECURITY CLASSIFICATION CONFIDENTIAL 2b GROUP 4
3 REPORT TITLE Throttling and Scaling Study for Advanced Storable Engine, Final Report AFRPL-TR-68-2, Parts 1 and 2	
4 DESCRIPTIVE NOTES (Type of report and inclusive dates) Final Report	
5 AUTHOR(S) (Last name, first name, initial) Andrus, Stanley R., H. L. Bishop, R. E. Duckering, J. A. Gibb, A. W. Nelson, V. H. Ransom	
6 REPORT DATE January 1968	7a TOTAL NO OF PAGES 123 / 7b NO OF REFS 5
8a CONTRACT OR GRANT NO F04611-68-C-0008 b PROJECT NO c d	9a ORIGINATOR'S REPORT NUMBER(S) Report 68-C-0008-F 9b OTHER REPORT NO(S) (Any other numbers that may be assigned this report)
10 AVAILABILITY/LIMITATION NOTICES	
11 SUPPLEMENTARY NOTES	12 SPONSORING MILITARY ACTIVITY AFRPL

13 ABSTRACT

This is the final report documenting the technical accomplishments of the ARES (Advanced Rocket Engine Storable) Throttling and Scaling Study Program under Contract F04611-68-C-0008. Included also in this report are the results of an Aerojet-General Corporation-sponsored design of a throttlable-restartable 100K ARES engine which was used as the baseline engine for this design study.

Throttlable, restartable ARES (Advanced Rocket Engine Storable) engine designs are presented at 25,000, 100,000, and 500,000 lb rated thrust levels. On the basis of these designs, engine thrust scaling parametric data are presented over a thrust range of 25,000 to 500,000 lb with nozzle expansion ratios of 50:1 and 150:1.

DD FORM 1 JAN 64 1473

Unclassified
Security Classification

Unclassified
Security Classification

14 KEY WORDS	LINK A ROLE	LINK A WT	LINK B ROLE	LINK B WT	LINK C ROLE	LINK C WT
Staged Combustion						
Storable Propellants						
High Chamber Pressure						
Throttlable Engine						
Restartable Engine						
Thrust Scaling Data						
Transpiration Cooling						
Gas-Liquid Injection						
Platelet Injector						
Integrated Turbopumps						
Propellant Lubricated Bearing						

INSTRUCTIONS

1. ORIGINATING ACTIVITY: Enter the name and address of the contractor, subcontractor, grantee, Department of Defense activity or other organization *(corporate author)* issuing the report.

2a. REPORT SECURITY CLASSIFICATION: Enter the overall security classification of the report. Indicate whether "Restricted Data" is included. Marking is to be in accordance with appropriate security regulations.

2b. GROUP. Automatic downgrading is specified in DoD Directive 5200.10 and Armed Forces Industrial Manual. Enter the group number Also, when applicable, show that optional markings have been used for Group 3 and Group 4 as authorized

3. REPORT TITLE: Enter the complete report title in all capital letters. Titles in all cases should be unclassified. If a meaningful title cannot be selected without classification, show title classification in all capitals in parenthesis immediately following the title.

4. DESCRIPTIVE NOTES: If appropriate, enter the type of report, e.g., interim, progress, summary, annual, or final. Give the inclusive dates when a specific reporting period is covered.

5. AUTHOR(S). Enter the name(s) of author(s) as shown on or in the report. Enter last name, first name, middle initial. If military, show rank and branch of service. The name of the principal author is an absolute minimum requirement.

6. REPORT DATE. Enter the date of the report as day, month, year, or month, year. If more than one date appears on the report, use date of publication.

7a TOTAL NUMBER OF PAGES The total page count should follow normal pagination procedures, i.e., enter the number of pages containing information.

7b NUMBER OF REFERENCES. Enter the total number of references cited in the report.

8a CONTRACT OR GRANT NUMBER. If appropriate, enter the applicable number of the contract or grant under which the report was written.

8b, 8c, & 8d. PROJECT NUMBER: Enter the appropriate military department identification, such as project number subproject number, system numbers, task number, etc.

9a. ORIGINATOR'S REPORT NUMBER(S): Enter the official report number by which the document will be identified and controlled by the originating activity. This number must be unique to this report.

9b OTHER REPORT NUMBER(S): If the report has been assigned any other report numbers *(either by the originator or by the sponsor)*, also enter this number(s).

10. AVAILABILITY/LIMITATION NOTICES: Enter any limitations on further dissemination of the report, other than those imposed by security classification, using standard statements such as:

(1) "Qualified requesters may obtain copies of this report from DDC."

(2) "Foreign announcement and dissemination of this report by DDC is not authorized."

(3) "U. S. Government agencies may obtain copies of this report directly from DDC. Other qualified DDC users shall request through _____."

(4) "U. S. military agencies may obtain copies of this report directly from DDC. Other qualified users shall request through _____."

(5) "All distribution of this report is controlled. Qualified DDC users shall request through _____."

If the report has been furnished to the Office of Technical Services, Department of Commerce, for sale to the public, indicate this fact and enter the price, if known.

11. SUPPLEMENTARY NOTES: Use for additional explanatory notes.

12. SPONSORING MILITARY ACTIVITY: Enter the name of the departmental project office or laboratory sponsoring *(paying for)* the research and development. Include address.

13 ABSTRACT: Enter an abstract giving a brief and factual summary of the document indicative of the report, even though it may also appear elsewhere in the body of the technical report. If additional space is required, a continuation sheet shall be attached.

It is highly desirable that the abstract of classified reports be unclassified. Each paragraph of the abstract shall end with an indication of the military security classification of the information in the paragraph, represented as *(TS)*, *(S)*, *(C)*, or *(U)*

There is no limitation on the length of the abstract However, the suggested length is from 150 to 225 words

14 KEY WORDS: Key words are technically meaningful terms or short phrases that characterize a report and may be used as index entries for cataloging the report. Key words must be selected so that no security classification is required. Identifiers, such as equipment model designation, trade name, military project code name, geographic location, may be used as key words but will be followed by an indication of technical context. The assignment of links, rules, and weights is optional

Unclassified
Security Classification