UNCLASSIFIED

| AD NUMBER |
| --- |
| AD386514 |
| CLASSIFICATION CHANGES |
| TO: unclassified |
| FROM: confidential |
| LIMITATION CHANGES |
| TO: Approved for public release, distribution unlimited |
| FROM: DoD Controlling Organization: Department of the Army, Office of the Adjutant General, Washington, DC 20310. |
| AUTHORITY |
| 2 Oct 1979 per DoDD 5200.10 document marking; Adjutant General's Office [Army] ltr dtd 29 Apr 1980 |

THIS PAGE IS UNCLASSIFIED

CONFIDENTIAL

DEPARTMENT OF THE ARMY
OFFICE OF THE ADJUTANT GENERAL
WASHINGTON, D.C. 20310

IN REPLY REFER TO
AGAM-P (M) (22 Sep 67) FOR OT RD-670280 2 October 1967

AD 386514

SUBJECT: Operational Report - Lessons Learned, Headquarters, 12th Combat Aviation Group

TO: SEE DISTRIBUTION

1. Subject report is forwarded for review and evaluation by USACDC in accordance with paragraph 6f, AR 1-19 and by USCONARC in accordance with paragraph 6c and d, AR 1-19. Evaluations and corrective actions should be reported to ACSFOR OT within 90 days of receipt of covering letter.

2. Information contained in this report is provided to insure appropriate benefits in the future from Lessons Learned during current operations, and may be adapted for use in developing training material.

BY ORDER OF THE SECRETARY OF THE ARMY:

Kenneth G. Wickham

KENNETH G. WICKHAM
Major General, USA
The Adjutant General

1 Incl
as

DISTRIBUTION:
Commanding Generals
US Continental Army Command
US Army Combat Developments Command
Commandants
US Army Command and General Staff College
US Army War College
US Army Air Defense School
US Army Armor School
US Army Artillery and Missile School
US Army Aviation School
US Army Chemical School
US Army Civil Affairs School
US Army Engineer School
US Army Infantry School
US Army Intelligence School

REGRADED UNCLASSIFIED
WHEN SEPARATED FROM
CLASSIFIED INCLOSURES

FOR OT RD
670280

CONFIDENTIAL

DISTRIBUTION (Cont'd)

US Army Medical Field Service School
US Army Military Police School
US Army Ordnance School
US Army Quartermaster School
US Army Security Agency School
US Army Signal School
US Army Special Warfare School
US Army Transportation School

Copies furnished:

Office, Chief of Staff, US Army
Deputy Chiefs of Staff
Chief of Research and Development
Assistant Chiefs of Staff
Chief of Engineers
The Surgeon General
Chief of Communications-Electronics
The Provost Marshal General
Commanding Generals
  101st Airborne Division (-)
  11th Infantry Brigade (Sep)
Commanding Officers
  198th Infantry Brigade
  3d Battalion, 503d Airborne Infantry
  12th Combat Aviation Group
Documents Control Officer (Mr. Smith) Bell Aero Systems Company
Joint Action Control Office
National Aeronautics & Space Adminisgration
ODDR&E, OSD (SEAM)
Joint Chiefs of Staff (SASM)
Research Analysis Corporation (Library)
Security Officers
  Los Alamos Scientific Laboratory (Dr. Agnew)
  Los Alamos Scientific Laboratory (Mr. Freyman)
  Sandia Corporation (Mr. Smith)

CONFIDENTIAL

DEPARTMENT OF THE ARMY
HEADQUARTERS, 12TH COMBAT AVIATION GROUP
APO 96491

AVGC-SC

SUBJECT: Operational Report-Lessons Learned (ORLL) (RCS CSFOR-65) for Quarterly Period Ending 30 April 1967.

TO: See Distribution

Downgraded at 3 year Intervals
Declassified after 12 years
DOD DIR 5200.10

SECTION I
SIGNIFICANT UNIT ACTIVITIES

A. (U) GENERAL: The 12th Combat Aviation Group continued to provide non-divisional Army Aviation support to the ground units in the III Corps Tactical Zone. As the number of ground tactical units increased a proportionate number of supporting aviation units arrived in-country to continue the effective aviation support. A close working relationship between commanders and staffs of the respective headquarters concerned soon developed as well as a better understanding of techniques at the operator level. The 269th Combat Aviation Battalion arrived in-country on 30 January 1967 and has provided the needed command and control capability for the new incoming aviation companies. Special mission capabilities were further developed to include the employment of the Low Level Light Television, continued employment of the XM-47 Gravel Mine, and daily use of the helicopter mounted smoke generator. During this reporting period the largest multi-brigade tactical exercise was conducted to date. All aviation assets were diverted to Operation JUNCTION CITY on D-Day, 23 February 1967, to assist in the delivery of personnel and supplies to the many landing zones used. A total of 5,173 combat loaded troops were inserted into the different landing zones. To support the ground units CH-47 Chinooks sling loaded three complete artillery battalions into forward areas in addition to lifting hundreds of tons of resupply. The Annual General Inspection was begun during March. As of this date only the 145th Aviation

Downgraded at 3 year Intervals
Declassified after 12 years
DOD DIR 5200.10

FOR OT RD File
670280

CONFIDENTIAL

Battalion have completed the inspection. Subordinate units and personnel of the Group continued to receive commendations, individual decorations, and letters of appreciation from supported units for the outstanding manner in which they have been performing their many missions.

B. (U) MISSION:

1. 12th Combat Aviation Group provides Army Aviation support to Commanding General, II Field Forces Vietnam, Senior Advisor, III Army Republic of Vietnam Corps, and Senior Advisor, IV Corps Tactical Zone. At the direction of the Commanding General, II FIELD FORCE Vietnam, provides aviation support to the United States, Republic of Vietnam, and Free World Military Armed Forces in III Corps Tactical Zone.

2. Provides Army Aviation support forces as directed by COMUSMACV for support of the United States, Republic of Vietnam, and Free World Military Armed Forces in IV Corps Tactical Zone.

3. Commands (less OPCON where specified) and administers assigned and attached Army Aviation and support units.

C. (C) ORGANIZATION (Annex A and B)

Organization of the 12th Combat Aviation Group during the reporting period included the following units with headquarters located as indicated:

| | | |
|---|---|---|
| a. | 12th Cbt Avn Gp | Long Binh |
| b. | 11th Cbt Avn Bn | Phu Loi |
| c. | 145th Cbt Avn Bn | Bien Hoa |
| d. | 214th Cbt Avn Bn | Bear Cat |
| e. | 222nd Cbt Spt Avn Bn | Vung Tau |
| f. | 269th Cbt Avn Bn | Cu Chi |

In addition, these units had subelements stationed at Phuoc Vinh and Lai Khe, as well as at field positions as called for by the tactical situation.

3

D. (U) COMMAND:

1. On 4 March 1967, LTC Byron E. Sheppard became Deputy Commander of 12th Combat Aviation Group replacing LTC Samuel P. Kalagian.

2. On 3 March 1967, LTC Robert G. Openshaw assumed command of the 269th Combat Aviation Battalion, replacing LTC Byron E. Sheppard.

3. On 30 March 1967. LTC Henry J. Nagao assumed command of the 269th Combat Aviation Battalion replacing LTC Robert G. Openshaw who was medically evacuated.

4. On 12 April 1967, Colonel Nicholas G. Psaki assumed command of 12th Combat Aviation Group from Colonel Raymond P. Campbell.

5. Headquarters and Headquarters Company, 214th Combat Aviation Battalion arrived in-country on 22 April 1967 commanded by Captain Donald A. Williamson.

6. LTC James M. Leslie assumed command of the 214th Combat Aviation Battalion on 24 April 1967. Headquarters and Headquarters Company 214th Combat Aviation Battalion is the successor organization for Headquarters and Headquarters Company Buffalo Combat Aviation Battalion (PROV) which was inactivated.

E. (C) PERSONNEL:

1. General: During the past quarter the authorized and assigned strength of the 12th Combat Aviation Group has continued to increase through the arrival of new units. The table below shows the units that have arrived during this period and the resulting increases in authorized strength. Actual strength increases are detailed in subsequent paragraphs:

New Units Arriving and Authorized Strength Increases

| | | | | |
|---|---|---|---|---|
| 200th Avn Co | 13 | 25 | 143 | 181 |
| 611th Trans Det | 1 | 1 | 80 | 82 |
| 187th Avn Co | 14 | 53 | 152 | 219 |

| | | | | |
|---|---|---|---|---|
| 601st Trans Det | 1 | 1 | 70 | 72 |
| 1st Sig Det | 0 | 1 | 8 | 9 |
| 214th Avn Bn | 21 | 2 | 86 | 109 |
| 338th Avn Det | 3 | 0 | 21 | 24 |
| 340th Avn Det | 2 | 0 | 22 | 24 |
| 341st Avn Det | 2 | 0 | 22 | 24 |
| | 57 | 83 | 604 | 744 |

(a) Both the 200th Aviation Company and the 187th Aviation Company are organized slightly different from other like companies in the 12th Combat Aviation Group.

| | | Auth EM |
|---|---|---|
| (1) | 200th Avn Co (CH-47) | 143 |
| | 147th Avn Co (CH-47) | 135 |
| | 178th Avn Co (CH-47) | 132 |
| | 213th Avn Co (CH-47) | 148 |

The differences among the above enlisted authorization are in the areas of gunners, landing control specialists, clerks, and armorers.

(2) The 187th Aviation Company (UH-1) is organized under MTOE 1-77G, USCONARC 3/67, with three airlift platoons. The other assigned UH-1 companies are organized under MTOE 1-77G, USARPAC 1/67, with two airlift platoons and one armed platoon. Although the total personnel authorization is the same, the 187th Aviation Company is authorized one more warrant officer and one less commissioned officer than the other companies.

(b) Upon arrival, the 338th, 340th, and 341st Airfield Operating Detachments were attached to the 1st Log Command, 1st Inf Div, and 25th Inf Div, respectively. Their personnel administration is handled by the commands to which attached, and these detachments are not included in the following remarks and statistics.

2. Officer Personnel: (a) The table below shows officer strength during the reporting period.

| | AUTH | ASG (Incl Intns Excl Atch) | PDY (Incl Atch) |
|---|---|---|---|
| 1 Feb-1006 | | 970 (96%) | 886 (88%) |
| 1 Mar-1006 | | 988 (98%) | 885 (88%) |
| 1 Apr-1116 | | 1040 (94%) | 986 (89%) |
| 1 May-1139 | | 1040 (91%) | 981 (86%) |

As indicated, actual strength, as a percentage of authorized officer strength, remained generally constant through the period and at the same level as in previous months. No significant shortage of any particular officer skill or MOS existed except 671C, aircraft maintenance technician.

(b) During the report period the ratio of commissioned officers authorized vs warrant officers authorized remained at 43%:57%. The ratio of commissioned officers assigned vs warrant officers assigned changed from 61%:39% to 57%:43%, this showing a slight movement toward a more proper balance of commissioned and warrant officers.

(c) The ratio of majors assigned to majors authorized has dropped from 4.1:1 at the end of the last quarter to 3.5:1 at the end of this period.

3. Enlisted Personnel: The status of enlisted strength during the period is shown in the table below:

| | AUTH | ASG (Incl Intns Excl Atch) | PDY (Incl Atch) |
|---|---|---|---|
| 1 Feb | 3865 | 4924 (127%) | 4558 (118%) |
| 1 Mar | 3865 | 4981 (129%) | 4789 (124%) |
| 1 Apr | 4319 | 5290 (122%) | 5193 (120%) |
| 1 May | 4405 | 5456 (134%) | 5478 (124%) |

As shown above, enlisted strength during the period has remained relatively constant and at approximately the same level as during previous months. The number of enlisted MOS in which significant shortages exist has decreased during this report period. The following shows significant enlisted shortages:

| MOS | AUTH | ON HAND |
|---|---|---|
| 26D30 (Ground Control Radar Repairman) | 3 | 1 (33%) |
| 51M40 (Firefighter) | 10 | 5 (50%) |
| 67W20 (Rotory Wing Tech Insp) | 56 | 40 (71%) |
| 68F20 (Aircraft Electrician) | 48 | 39 (81%) |

4. Casualties

Casualties sustained by the units of the 12th Combat Aviation Group during the period 1 Feb 67 - 30 Apr 67 are:

| | |
|---|---|
| Dead, not as a result of hostile action: | 28 |
| Killed in action: | 8 |
| Seriously injured in non-hostile accidents: | 11 |
| Injured, not seriously, in non-hostile accidents: | 37 |
| Wounded in action: | 100 |

As a one time report the following is submitted from figures not previously reported (Casualty figures from 1965 and 1966):

| | |
|---|---|
| Wounded in action during 1965: | 127 |
| Killed in action during 1965: | 22 |
| Wounded in action during 1966: | 513 |
| Killed in action during 1966:. | 47 |

12th Aviation Group has 5 personnel in missing status carried over from 1965 and 1966. The status of these individuals is reviewed annually.

5. Sundry Funds, Clubs & Messes:

An additional 4 sundry funds were authorized during the reporting period, bringing the total sundry funds in Group to 21. HQ USARV extended until 30 April, the deadline for conversion of non-appropriated fund messes into field ration messes. Plans for conversion were prepared and all were converted by the required data.

6. Unit Funds:

All companies have established accounts with an in-country banking facility and have received their check books. Some funds have not fully received notification from Saigon Central Post Fund of the period which is covered when funds are deposited in the units accounts. Saigon Central Post Fund has been notified of this problem and will in the future notify units of the period covered when making a deposit.

7. Awards and Decorations:

During this period 5,824 recommendations were submitted and 5,460 awards received.

a. The following is a breakdown of recommendations submitted and awards received:

| FEB-MAR-APR | SUBMITTED | RECEIVED |
|---|---|---|
| MEDAL OF HONOR | 0 | 0 |
| DISTINGUISHED SERVICE CROSS | 0 | 0 |
| DISTINGUISHED SERVICE MEDAL | 0 | 0 |
| SILVER STAR | 13 | 2 |
| LEGION OF MERIT | 19 | 3 |
| DISTINGUISHED FLYING CROSS | 204 | 94 |
| SOIDIERS' MEDAL | 9 | 7 |
| BRONZE STAR | 129 | 107 |
| AIR MEDAL "V" | 81 | 69 |
| AIR MEDAL | 5,178 | 4,967 |
| ARMY COMMENDATION MEDAL | 191 | 211 |
| | 5,824 | 5,460 |

b. Special handling is given to posthumous awards at all echelons and should result in all awards for the deceased being presented to the next of kin at one timely ceremony.

8. Education:

During this quarter Long Binh Post Education Center has opened. Individuals in the Long Binh/Bien Hoa area may now take tests and receive guidance from professional counselors.

9. R & R:

The R&R utilization rate for this quarter:

| | |
|---|---|
| February: | 75.9% |
| March | 79.4% |
| April | 86.6% |

While the utilization rate has steadily improved as a result of increased command attention, it has not reached the desired 100%. Particular emphasis is being placed on preventing last minute cancellations and eliminating failure to show on the flight upon which manifested. Additional brochures and informative literature have been requested from USARV R&R offices and some have been received. The subordinate units are informing their men of the advantages and merits of some of the less popular locations. The primary difficulty in filling quotas for some of the less popular locations appears to be a lack of information as to what the location has to offer.

10. Special Services:

Special services supply point has started distribution on dayroom furniture kits as they become available. Two of the 12th Gp. units have received the kit and it materially enhances the recreational facilities available to the troops. Two units have received photo lab kits this quarter and will soon have them fully operational. By having the photo lab available, it is anticipated

that, in addition to the instructional and morale value of the facility, a reduction of piaster expenditure on the local economy will result. Additional photo kits are on requisition to expand this program.

11. Information Program:

a. The information program reflected increased productivity, particularly in the area of hometown releases which increased 60% over the previous reporting period. During the reporting period the following printed and pictorial releases were submitted to the media:

| | |
|---|---|
| Hometown releases: | 665 |
| Hometown photos: | 125 |
| News releases: | 161 |
| News photos: | 71 |

b. Two 12th Group units were filmed for nation-wide telecasts during the reporting period. The 173rd Assault Helicopter Company was filmed by ABC on 24 April for a nation-wide viewing of life in an Army Aviation unit. On 25 April the element of the 54th Aviation Company was filmed by CBS.

c. During the reporting period 12th Group units have actively participated in the USARV information program by daily reporting the units significant events.

d. The Group's Command Information program continued to receive emphasis. ch Thursday the unit prepares and disseminates a Command Information ct Sheet in order to supplement information received from higher headquarters. This headquarters continues to prepare and disseminate a weekly bulletin to all 12th Group units. Two subordinate units, the 11th and 222nd Combat Aviation Battalions, continue to publish unit newspapers.

10

12. Civic Action:

During the reporting period, all 12th Group units were engaged in Civic Action activities. Group units sponsored 22 projects on a continuing basis. Progress was made in three areas; English classes, commodity distributions, and MEDCAP. 702 Vietnamese students received English instructions on a weekly basis which was an increase of 16%. Additionally a pilot program of adult education classes was initiated by a subordinate unit, the 173rd Assault Helicopter Company. Commodity distribution continued to be used effectively by Group units, but only as a temporary measure to augment existing local resourses. Those receiving assistance were the aged, infirm, war widows, and orphans. 12th Group's MEDCAP efforts continued to be well received. The Group surgeon was successful in enlisting the services of a dentist and a Korean Preventive Medicine team. Through a combined effort by this team, sanitation and hygiene have noticeably increased in one village sponsored by the Group. Some difficulty has been experienced in getting the villagers to accept toothpaste donated by the Group's Civic Action Team. However, a visit by a dentist and a demonstration on dental hygiene has apparently overcome this difficulty and the same villagers now eagerly accept the toothpaste.

13. Reenlistment Program:

The Group reenlistment rate during the reporting period is shown in the table below:

| | 1st Term RA | | | Career | | | US | | |
|---|---|---|---|---|---|---|---|---|---|
| | Elig | Reenl | % | Elig | Reenl | % | Elig | Reenl | % |
| Feb | 8 | 5 | 62.5% | 18 | 11 | 61.1 | 43 | 1 | 2.3 |
| Mar | 11 | 2 | 18.2 | 13 | 11 | 84.6 | 29 | 0 | 0.0 |
| Apr | 25 | 5 | 20.0 | 8 | 7 | 87.5 | 46 | 0 | 0.0 |

Quarterly

| 1st Term RA | | | Career | | | US | | |
|---|---|---|---|---|---|---|---|---|
| Elig | Reenl | % | Elig | Reenl | % | Elig | Reenl | % |
| 44 | 12 | 27.3 | 39 | 29 | 74.4 | 118 | 1 | 0.8 |

14. Extensions:

Extensions of foreign service tours: During the report period, 5 Officers and 332 EM (6% of assigned enlisted strength) extended their foreig service tours in Vietnam. This compares with one officer and 224 EM during th preceding period.

15. Direct Hire Personnel:

During the reporting period considerable improvement was observed in both direct hire and daily hire procedures. New procedures initiated by Manpower Control Division, G-1, USARV, were especially timely and resulted in much greater control of available resources. Previous procedures allowed USARV to issue foreign national hire allocations directly to company level. This headquarters now exercises direct command supervision over both the direc and daily hire system.

The total Group allocation of direct hire foreign national labor is 457 spaces against a USARV recognized level of 496 spaces. The allocation does not materially reduce the Group total direct hire strength, but significant reductions were required in some companies as a result of redistribution of spaces within the Group. USARV currently has no provisions for additional allocations for newly arriving units because of the manpower ceiling. The total Group allocation of daily hire resources for 2d Quarter, CY67 is 12,789 man days and $1,152,000VN. The total associationis the minimum required to support operations. Priority for utilization of daily hire is given to newly arrived units for filling sandbags and construction.

12

F. (C) INTELLIGENCE:

1. Security:

a. The S-2 Section continued in its capacity of providing command guidance throughout the Group in matters pertaining to personnel secruity and safeguarding of classified material.

b. The classified files and distribution facility operated by the S-2 Section processed 14,212 classified documents during the 90-day period covered by this report. Also during this period, all classified documents were reviewed for regrading and/or destruction with 557 SECRET documents being destroyed.

c. The Group experienced no security violations during the period requiring investigation under the provisions of paragraph 42, AR 380-5. This headquarters received no administrative violations during this period.

2. Staff Visits:

a. The S-2 made staff visits to each subordinate battalion headquarters during the period, providing intelligence and security guidance as appropriate and maintaining continuity and uniformity of effort.

b. Regularly scheduled liaison visits were made weekly to USARV Headquarters by a representative of the S-2 Section with visits to 1st Aviation Brigade included when practicable. Daily contact is maintained with representatives of the AC of S, G2 II FFORCEV.

3. Review of Report Requirements: A continuous analysis of existing requirements with a view toward reducing the volume and increasing the value was conducted during the period. This analysis resulted in the discontinuance of the monthly "Hostile Fire Overlay" report from Battalions to Group and from Group to Brigade.

13

4. Cartographic Material: With the exception of a few unprinted out-of-stock sheets, full coverage of the Group area of influence and area of interest is being maintained in sufficient quantity to satisfy operational requirements for the Group Headquarters.

5. Revised SOP: During the reporting period a new and expanded S-2 SOP was published on 4 April 1967.

6. The following items were accomplished during this reporting period:

a. The publishing of check lists as required by USARV Reg 380-5

b. A vigorous program of reviewing and destroying classified material.

c. The preparation and presentation of the annual SAEDA lecture to all members of this headquarters.

d. The conducting of a Group-wide semi-annual inventory of classified material.

e. Improvements in the Group E & E program to include completion of an E & E display board and the issuing of weekly E & E tips to all aviators.

f. Modification of briefing and debriefing procedures within this headquarters and subordinate units.

g. The maintaining of up-to-date intelligence charts and maps.

h. An expanded weekly intelligence and security briefing, covering in and out of country activities of the enemy.

i. Quarterly after-hours security inspection.

j. Revised method of posting OB information on the situation map.

k. Revised method of posting Aircraft Hostile fire and incident information situation maps.

l. Establishing and maintaining an up-to-date overlay of the status of highways (Obstacles and Barriers) within III CTZ.

G. (C) OPERATIONS AND TRAINING:

1. Centralized Control of CH-47's: During Phase 1, Operation JUNCTION CITY, 22 February through 6 March 1967, all CH-47 (Chinook) support was consolidated under the control of the 222nd Combat Support Aviation Battalion. During this period operational control was exercised over four Assault Support Helicopter Companies. This was a new concept for the employment of CH-47's in a large scale tactical operation. The effectiveness of the centralized organization of CH-47 (Chinook) operation was considered to be excellent. However, there were disadvantages which can be overcome in future operations. For the After Action Report, CH-47 Operations, Operations JUNCTION CITY, Phase I, see Annex C.

2. Stationing: During the quarter 12th Combat Aviation Group has witnessed the arrival of two battalion headquarters and headquarters detachments; an Assault Helicopter Company (Air Mobile Light Company) and an Assault Support Helicopter Company (Air Mobile Medium Company).

The 269th Combat Aviation Battalion became operational in time to greet the arriving 187th Assault Helicopter Company. In addition to the 187th, which is stationed at Tay Ninh, the 116th Assault Helicopter Company has been assigned to the 269th Combat Aviation Battalion.

The 200th Assault Support Helicopter Company arrived during March and became operational at Bear Cat on 15 April. The 214th Battalion Headquarters and Headquarters Detachment arrived during late April and assumed the role that the Buffalo Combat Aviation Battalion (PROV) fulfilled at Bear Cat.

15

3. Training:

a. Aerial Gunnery: During the reporting period, particular emphasis has been stressed on aerial gunnery training. Because of the influx of XM-21 armament systems (miniguns) into the companies, an immediate requirement existed to cross-train both aviator and maintenance personnel on the new equipment. The aviator cross-training on the XM-21 armament systems did not present any formidable problems. However, it was found necessary to request assistance from higher headquarters in order to properly train armament personnel. In response to this and other organization's requirements, the 765th Transportation Battalion, Vung Tau, established a New Equipment Training Team (NETT) for XM-21 armament system maintenance training. Cadre instructor personnel from the units of 12th Group were selected and are enrolled in the NETT training courses for the XM-21 armament system. These instructors will conduct unit training of assigned and replacement personnel in order to maintain the continuity of trained XM-21 armament personnel.

b. Airmobility Training, CH-47: The 178th Assault Support Helicopter Company, 11th Combat Aviation Battalion, prepared a handbook on CH-47 (Chinook) Employment and Utilization in Vietnam and distributed copies to the supported units in III Corps. All supported units of III Corps receive initial and refresher CH-47 employment training on request. As a direct result of both the outstanding handbook on CH-47 (Employment and Utilization) and the training conducted by the 12th Group Air Mobile Training Teams CH-47 for III Corps units, there has been a significant decrease in sling load incidents and an increase in daily tonnage capability.

c. Maintenance Training: The AAMTAP Courses at Vung Tau continue to be of invaluable assistance to the organizations of this Group. The number of quota requests for courses from 12th Group units continue to exceed the quotas allocated. The allocation of quotas for the T-53-L-13 engine course for April and May was most timely and has allowed enough lead time for the training of cadre instructor personnel prior to the arrival of the L-13 engines in the units. The establishment of the AAMTAP Supply Specialists School which is designed for aircraft or avionics Tech Supply personnel was a welcome and much needed addition to the AAMTAP school list of courses.

d. In-country Flight Training: The arrival of two new units created the need for aviator infusion and in-country check out and training. Aircrews of the 187th Assault Helicopter Company and the 200th Assault Support Helicopter Company were placed on temporary duty with the operational companies of the Group for the purpose of in-country orientation and training. In-country experienced instructor pilots and aircraft commanders were infused into the newly arrived companies in order to assist in establishing unit training programs and develop company standing operating procedures applicable to the Vietnam environment.

e. Survival Training: As of 30 April 1967, thirty-four aviators in 12th Group received Escape and Evasion Training in the Philippines. The personnel who have attended the Escape and Evasion Training are brining back a wealth of experience and are being used as instructors in the Escape and E[illegible]on Training Programs at unit level.

f. I[illegible]der Training: Pathfinder training continues to be conducted by the [illegible]viation Battalions within 12th Group and those trainees who quali[illegible]e been awarded the designation of Pathfinder in accordance with USARV [illegible]sage 26232.

17

g. Firefly Training: During this reporting period, all companies of the 11th and 145th Combat Aviation Battalions were given Firefly cadre personnel by the 334th Armed Helicopter Company. The company Firefly cadres conducted training within their respective organizations in order to fully develop the Firefly potential in each company. As a direct result of the Firefly training program the 12th Combat Aviation Group combat potential has been substantially increased.

h. VNAF Training: Seven VNAF aviators were attached for UH-1 transition and tactical training on 15 February 1967. The VNAF aviators were assigned to companies within the Group and were given training as required by TC1-10 (UH-1 Transition Training). Upon completion of the UH-1 transition training, the VNAF aviators were assigned on normal operational missions and received concurrent tactical training during the remainder of this reporting period. The VNAF aviators were issued UH-1 checklists and UH-1 Pilot Handbooks written in Vietnamese before arriving at 12th Group. The checklists and handbooks proved to be extremely valuable during the transition phase of training and reduced some of the problems created by the language barrier.

4. Standardization:

a. Go-No-Go Card: Due to some accidents being caused by loss of RPM on take off, a safety class was conducted for all company size units. Part of the instruction period was devoted to an explanation and use of the GO-NO-GO card. Many of the newly rated aviators were not aware of how to use the card prior to the period of instruction.

b. Instrument Training: The Group policy on two hours of hood flight per month was reemphasized. The training is to be accomplished during missions not involving CA's. The requirement for instrument proficiency

becomes more prevalent during the marginal weather that accompanies the monsoon season.

Twelve fixed-wing instrument renewal rides were conducted utilizing the resources from the Group. Although the requirement for instrument certification is waived, every effort is made to conduct renewal rides for those who desire them. In order to make the FW instrument program more effective, a request was submitted for assignment of a U-6 aircraft to Group Headquarters. The aircraft would be utilized as a courier with a concurrent fixed wing instrument program.

c. Instructor Pilots: Continued emphasis was placed on having highly qualified personnel as Standardization and Instructor Pilots. The quality and quanity of instructor pilots has remained high throughout the Group with a large percentage of the instructor pilots being former Flight Instructors at the Aviation School. Visits were conducted to all Battalions at least once per month in addition to performing Standardization Instructor Pilot Check Rides on the Battalion SIP's.

d. Staff Assistance Visits: Visits were made to each battalion on a scheduled monthly basis and at other times when the situation required. Numerous difficulties were solved prior to their becoming a problem. Any difficulties that the S-3 representative could not resolve on the spot were passed on to the appropriate S-3 action officer. Visits such as these gives the unit an opportunity to present their difficulties in an informal manner.

19

H. (C) LOGISTICS:

1. Summary of S4 Activities:

a. During the reporting period, S4 activities were directed toward receipt of new units, construction of facilities, and general improvement of logistical efforts.

b. This Group has recently received several new units arriving from CONUS and is programmed to receive several more. Through prior planning as to the action to be taken on the Units' arrival can avoid a situation resembling a temporary nightmare. Information on the arrival times of aircraft bringing personnel and cargo into Vietnam from CONUS should be expected to be late, sketchy, and in many cases incorrect. Action is taken far in advance to determine "slot times" (estimated departure times from CONUS) for each aircraft. After the slot times are first determined a daily check is made to ascertain if any change has taken place. After computing the estimated arrival times in-country, based on the slot times, action is taken to arrange temporary billeting, if required, and in-country transportation. Because slot time is a "proposed time" and because the time of flight from CONUS to Vietnam varies with type aircraft, close coordination with the appropriate USAF facilities is a must if one is to accurately determine an aircraft arrival time. Based on this experience, a Group field grade officer is on the spot, working with the USAF in the handling of all incoming flights, and is assisted by an officer from the sponsoring battalion that has been briefed by the unit's advance party.

c. The arrival of personnel of new units creates an adverse effect on the supply system, in that sponsoring units are required to provide necessary supplies and equipment until TOE equipment of new unit arrives. The TOE equipment is transported by ships and normally arrives after the personnel. Assistance continues to be provided by sponsoring units in order that necessary supplies and equipment can be obtained.

d. Facility development is an area of interest for the Group S4 and all Battalion S4's. One of the most significant lessons learned by the 12th Combat Aviation Group S4 during the past quarter has been the importance of programming to receive and base new incoming units. This is a most difficult task because of many variables, some of which cannot be resolved until shortly before the new units arrive. If chaos is to be avoided, plans for developing adequate facilities for incoming units must be made at the earliest opportunity. This is because of the staffing requirements and limited engineer and material support one can expect. The unit S4 must assume the responsibility of determining what is required in the way of base development and they must take appropriate action to see that it is accomplished. Word of mouth is to be avoided - requests for engineer and material support should be put in writing and all action must be taken sufficiently far enough in advance so that what is required can be accomplished. Close coordination with the unit S3 is a must since the S3 is responsible for determining the units' stationing plan. Follow-up action, after the appropriate written requests have been submitted, is a must.

In a combat situation, the engineer support promised today may disappear tomorrow. If it's your unit that requires a facility to be developed, it's your responsibility to see that the job is accomplished.

2. Supply:

a. Body Armor: Issue of body armor is still controlled by 1st Log Command due to limited assets. Newly arrived units have been advised to requisition body armor through 1st Log Command. At present, the on hand/authorized percentage stands at approximately 50% for front and back and 80% for front w/carrier.

b. Ballistic Helmets: Issue of helmets has been good. Requirements are now approximately 70% filled. Problems are being experienced with sizes in that the medium helmet cannot be worn by many individuals who wore medium APH-5 helmets. Requirements were adjusted with 1st Log Command and more of the large size are being requested.

c. Tool kits for torqueing 2.75" rockets: A total of 34 kits were received from 1st Aviation Brigade and issued to units. The kit is used in place of strap wrenches.

d. POL Pumping Equipment: 10 each 100 GPM pumps were received during the month of April. The filters, placed on requisition by 1st Log Command, have not arrived in-country as yet.

e. Tool kits, Aircraft General: 96 kits were received during April and issued to units. Survey is being conducted to determine additional requirements and a bulk requisition will be submitted.

f. Ammunition: The 2.75" rocket was removed from ASR control on 1 March 1967 and units were instructed to request as required.

Yellow and violet hand smoke grenades are still controlled by ASR due to limited assets. The availability of ammunition has improved and the ASR control is not a serious problem at this time.

g. CAR-15 Submachine Gun: 75 of the CAR-15's were received in April. 11th Combat Aviation Battalion, 145th Combat Aviation Battalion, and the 222nd Combat Support Aviation Battalion were issued 25 each for test and evaluation. The CAR-15 uses the same ammunition as the M-16 but is shorter in length and more easily carried in aircraft. The test will determine the combat serviceability of the weapon and what weapons it should replace on TOE.

h. Authority for Equipment in Excess of TOE: A change in USARV procedures for requesting equipment in excess to authorized allowances was initiated in March 1967. USARV Form 47's are no longer authorized for requesting equipment and all equipment previously authorized on USARV Form 47 must be included in MTOE/MTDA. Units may submit emergency request for temporary loan if situation justifies an immediate requirement, Temporary loan of selected items can be made by USARV for a period of 60 days, but a MTOE must be submitted within 30 days or temporary loan will be rescinded. This new procedure will delay receipt of equipment due to the time required for MTOE/MTDA approval.

i. Class 1: No major problem areas exist in the 12th Combat Aviation Group messes at this time. All messes now have a qualified Mess Steward by virtue of promotion and replacement. Command emphasis on mess operation has improved. Construction of mess halls has progressed rapidly. Six messes in the Bien Hoa area recently inspected by the USARV I.G. received high ratings.

23

3. Aircraft Maintenance:

a. During the months of February and March, aircraft hours flown reached the highest utilization to date. This was especially true of the UH-1D and O-1 aircraft. These aircraft flew an average of 98 and 127 hours per assigned aircraft per month respectively. As a result of the high utilization of aircraft, combat damage, and crash damage, the EDP rate remained well above that which was projected though it decreased two percent during February and March.

b. When an aviation unit is deployed over vast distances within RVN a well defined aircraft recovery plan is necessary because the location and radio frequencies of units enroute who could help are not readily available. During April a company of this Group was faced with a unit move and as part of its movement plan provided for positive aircraft recovery support enroute. One UH-1D did go down with an engine failure over unsecure terrain but was recovered in less than fifteen minutes and taken to a secure area for repair with no further material damage or personal injury. A well prepared and executed aircraft recovery plan prevented the possible loss of one helicopter.

I. (C) SIGNAL:

1. Command Post Communication:

During the reporting period two additional secure teletype circuits were installed to the 214th and 269th Cbt Avn Bn, thereby providing the capability of sending up to SECRET traffic to each of the five battalions and 1st Aviation Brigade Headquarters. Additional emphasis upon use of secure teletype has caused the number of messages transmitted to more than triple during this quarter. Sole-user telephone

circuits have been installed to each unit not co-located with it's parent headquarters. Future sole-user circuit requirements have been programmed for all units that are scheduled to arrive within the next year. This system of point-to-point telephones allows rapid responses to command and control of aviation assets. The long awaited SSB radios failed to arrive during this quarter. The SSB radio equipment will provide an expanded range radio net for control of aviation units.

2. Air Traffic Control and Navigation Aids:

Six control tower teams were requested and employed during Operation JUNCTION CITY at Tay Ninh (W), Dau Tieng, Trai Bi, Minh Thanh, Quan Loi, and Soui Da Airfields. The USAF provided five nondirectional beacons for the operation. This marked the first time that ATC facilities were made available in this quantity for tactical operations. It must be noted that due to a lack of coordination in locations, frequencies and identifiers of the USAF beacons were unknown to the Army aviators during the first part of the operation. The same lack of coordination has been noted on the employment of USAF Combat Control Teams at tactical airfields. ATC assets are not avialable to provide support to many of the airfields used by aviation elements of this command. The facilities are normally provided by employment of radio-telephone operators and tactical radio assets when available.

The portable non-directional beacons, AN/TRN-25, were installed during Operation JUNCTION CITY but were unsatisfactory. The primary difficulty was interference with the AN/TRC-24 VHF telephone systems. Two EIR's were submitted on improper wiring of the sets.

3. NOTAM Service:

A Flight Information Notification (FIN) was established by 1st Aviation Brigade during this reporting period. This system has not worked to the satisfaction of the subordinate aviation units. No FIN's have been received by elements of this headquarters using this system. Currently, information pertaining to local hazards to aircraft, navigation, and ATC are obtained by close liaison with the responsible tactical units and messages are expediously relayed through aviation command and control channels. To insure receipt by all interested aviation agencies the messages are also disseminated by teletype to twenty-six other units with aviation interest in the III CTZ. This service has been improved with the addition of the USAF weather/NOTAM teletype circuit. The data from the daily NOTAM summary is passed down to the subordinate units.

4. Staff Visits:

Numerous technical staff visits were made to the supporting Signal Detachments. The purpose of the visits were to provide technical and command assistance to the avionics maintenance teams. Many technical functions and procedures were noted and passed on to the other teams in order to improve their communications.

5. SOI/SSI:

The pocket-sized aviator SOI published by the 12th Combat Aviation Group has been well received by all aviation units. The distribution was increased to 750 to accommodate the demand by non-organic aviation units operating in the III CTZ. An SSI was prepared

and disseminated to all subordinate units. This document will provide written guidance on Signal procedures previously handled on verbal basis.

6. Avionics Problems Encountered:

a. Some progress was made during this period on obtaining authorized float stockage for FM and UHF radios. However, a lack of maintenance float is still a significant problem with the new ARN-82 and ARN-83 navigation receivers.

b. Maintenance publications and experience indicate a continued flow of new equipment into the country without the required test equipment, publications, parts, or trained personnel. This equipment, such as the AN/TRN-25, ARC-131, ARC-134, ARN-82 and ARN-83 will encounter severe maintenance problems without the necessary supporting equipment.

J. (C) FLIGHT SAFETY:

1. Summary of Activities:

During the reporting period the 12th Combat Aviation Group Aviation Safety Section recorded, reviewed and analyzed:

| | |
|---|---|
| 38 | Aircraft Accidents |
| 47 | Incidents (Non-Combat) |
| 17 | Forced Landings |
| 14 | Precautionary Landings |
| 17 | Combat Damages (Major and Minor) |
| 277 | Aircraft Hit by Hostile Fire |
| 0 | Other type Accidents |

27

Significant increase in non-combat incidents and aircraft accidents primarily caused by human error are attributed to the large influx of replacement pilots with a minimum of experience coupled with an increase in flying hours.

2. Significant Events:

a. On 6 February 1967 a UH-1D experienced complete tail boom failure on short final to an LZ. Four personnel were killed and six injured. The aircraft was a total loss. A detailed investigation revealed that the lower left main longeron failed as a result of wear caused by a design error in the aft battery shelf. This was subsequently verified by AR/DMAC. A safety of flight message for inspection of the area plus an urgent action work order for modification of all UH-1D aft battery shelf and longeron at the shelf attaching points were issued. Some fifty-five aircraft were found to have wear which caused grounding.

b. Results of the analysis of parts submitted from the CH-47 which crashed on 17 January 1967 received in February revealed as the cause of the accident that one blade had failed from fatigue causing loss of synchronization and subsequent blade collision. A team was dispatched to the Republic of Vietnam by the manufacturer. This team has completed as inspection of all CH-47 blades to determine if any other blades have fatigue cracks. Results are unknown.

c. Results of the analysis of recovered wreckage of two UH-1D accidents, one on 17 January and one on 28 January, indicated that the cause was failure of the synchronized elevator control tube. A safety of flight urgent action message on all UH-1D's aircraft for inspection of synchronized elevator controls was issued during this reporting

period. As a result of this inspection several aircraft, to include one 1966 model with less than 125 hours since new, have been found to have loose adjustable clevises. Several UH-1C aircraft were also inspected and one was found deficient which resulted in the extension of this inspection requirement to the UH-1C model.

d. The analysis and subsequent inspections resulting from the events a, b and c above have served to significantly reduce the accident rate as pertains to these aircraft. These events emphasize three important points:

(1) Detailed investigation and analysis will effectively prevent future accidents.

(2) Recovery of the components of crashed aircraft is vitally important to the prevention of future accidents.

(3) Aviation Accident Prevention and Aircraft Maintenance must promote an ever closer working relationship as our aircraft become more complex.

e. Intense command emphasis placed on preventing accidents resulting from IFR in dust and loss of RPM has significantly reduced this type of accident.

K. (U) MEDICAL:

1. Summary of Medical Activities:

a. Staff visits have been made frequently within 12th Combat Aviation Group during the above period, rapport and communication have been attained.

29

b. The 772 Medical Detachment (QA) was transferred 30 April 1967 from Vung Tau to Bear Cat (214 Bn).

Projected move for 1 May will include 774 Medical Detachment from Bien Hoa (145 Bn) to Can Tho (13th Bn).

c. Monthly 12th Group flight surgeon's meetings were held in the quarter with good attendance and included guest speakers from the 93rd and 29th Evac. Hospitals. Several problems were discussed and resolved which otherwise would have taken several months to complete.

d. 12th Combat Aviation Group continues an active and expanding MEDCAP program. After some investigation of a local teaching civilian Vietnamese and Korean supervisory sanitation group (organization at Bien Hoa Civic Hospital), rapport was established and success made in having this team provide our MEDCAP hamlet at Tan Van, with an immunization program, the teaching of hygienic measures and provision of material for mosquito control (DDT). Great success has been made and over a three week period ending 27 April, 2458 people have been immunized with cholera, plague, and small pox vaccination.

A dentist has been included into the MEDCAP group and will be available at least every other week to provide dental care and to teach preventive dental hygiene.

e. The small dispensary at the Group Surgeon's Offices provides first echelon medical care for Group Headquarters personnel and assures proper supervision of their immunization.

f. Ballistic helmet survey is being conducted at the present time to evaluate its merits. An objective type questionaire has

been prepared consisting of 2 portions; the comfort portion to individuals receiving helmets, and a Medical Section to be filled in by Flight Surgeons when helmet is involved in an accident or other mishap. Such forms have been distributed to all battalions within Group. Data is at present being returned.

2. Goals for next quarter:

a. Establish consolidated battalion dispensary at Bear Cat (214th Aviation Battalion). Provide 11th Aviation Battalion dispensary with required equipment to make it 100% operational as a consolidated dispensary.

b. Re-evaluate MEDCAP throughout Group to insure that it is being carried out under provisions of USARV Regulation 40-39.

c. More units in this command have received the XM-21 weapons system and due to the high noise level, studies will continue to be made to provide data in anticipation of unforseen detrimental auditory effects.

d. A scheduled program of lectures on first aid will continue to become more effective in all battalions; included, will be movie films to enhance the preventive measures, to be made regarding venereal diseases.

31

COMMANDERS OBSERVATIONS AND RECOMMENDATIONS

PART I

OBSERVATIONS (LESSONS LEARNED)

A. (U) PERSONNEL: None

B. (U) OPERATIONS: None

C. (U) TRAINING AND ORGANIZATION:

Item: Non-UH-1 Qualified Aviators Transition Training

Discussion: Rotary wing qualified aviators continue to arrive in RVN that are not qualified in the UH-1 aircraft. This practice places a heavy burden on the gaining unit which must transition the individual into the UH-1 in accordance with the applicable training circular.

Aircraft and instructor personnel must be diverted from the combat effort in order to accomplish the training task, this in turn reduces or impairs the combat capability of the unit for whatever time is required for the transition training. Training areas and aids, conducive to sound teaching theories and practices, are not available which in turn tends to reduce the quality of the finished product.

The effectiveness of the incoming individual is greatly reduced until the transition training and the in-country training is completed depending on the duty assignment. An individual not qualified in the UH-1 could be in-country for 30 days or more before full utilization could be realized.

Recommendation: Since the UH-1 is the predominant helicopter in use in RVN, it is recommended that qualification in the UH-1 be part of POR requirements of each rotary wing qualified aviator assigned to RVN.

D. (U) INTELLIGENCE: None

E. (C) LOGISTICS:

1. Requisitions for Supplies and Equipment

a. Follow-up action.

b. Discussion: Sometimes requisitions for supplies and equipment become lost and/or outdated due to numerous reasons. Unit supply records will reflect a valid due-out but in fact the requisition is not in the system.

c. Observation: Aggressive follow-up action by unit supply personnel will insure that the requisition remains valid and that proper action is taken at all levels of support.

2. Facilities Development

a. Item: Construction for New Units:

b. Discussion: Construction requirements for new units is the function of the sponsoring unit S4, coordinated with the S3 for the stationing plan. The S4 determines minimum essential requirements that are submitted to the local installations Base Development Board (BDB) for approval. Engineer Construction Directives cannot (will not) be issued until approved by BDB. Close coordination, liaison, and follow-up action (if necessary) with the local Engineer unit and BDB is mandatory to assure timely completion of required facilities.

c. Observation: Engineer support and materials are, in some area, very limite Therefore, adequate and thorough prior planning is most advantageous. Total requirements should be specified in the initial request, but additional facilities can be obtained by proper requests through the local Base Development Board.

3. Arrival of New Units

33

a. Item: Arrival of New Units.

b. Discussion: Arrival data of new units, at best, is a guess until 12 to 24 hours before touch-down or docking. Based on past experiance, each arrival presents different problems and action, dependent on method and time of arrival, type of unit, and in-country assigned stationing. Initial in-country arrival is coordinated by the 12th Grp but the sponsoring unit has responsibilities to receive the new unit on station by providing adequate personnel accommodations and providing means of receiving the units cargo and A/C upon ship arrival at Saigon and/or Vung Tau.

c. Observation: There is no one inter-service office, staff or organization to coordinate movement data required for adequate new unit arrival planning. Communication between and within the various agencies is poor. General planning and coordination is done by the Group S-3 and S-4, but must remain flexible to adjust and/or detail plan at the last minute. The sponsoring unit can also serve itself by providing an officer from the Battalion Headquarters that has been briefed by the new units advance Group/Battalion coordinator.

F. (U) MEDICAL:

1. Food Poisoning:

Item: Staphylococcal Food Poisoning.

Discussion: Increasing incidence of gastro-entiritis, is being reported throughout the command. The situation is the result of:

a. Eating foods on the economy, and in area lacking proper food sanitation measures.

b. Influenza like syndrome: Mess halls in which food handlers are not being screened daily by their supervisor and are not meeting with regulations requiring certain

preventive measures as outlined in AR 40-5 & MACV Directive 40-16. The most common offending organism is staphylococcus, the same bug that causes pimples, boils, carbuncles, etc. When food is contaminated, a powerful toxin (poison) is permitted to be released, which within several hours (4-8) the individual suddenly becomes severely ill with cramps, diarrhea and/or nausea and vomiting. In the case of the aviator in command of a ship, such sudden effects could be fatal. Intensified efforts are needed for prevention.

Observation:

Emphasis must be placed on proper mess hall supervision of all food handlers, and food preservation techniques; education of all, regarding "dining out" on the economy and the use of non-potable ice.

PART II - RECOMMENDATIONS

A. (U) PERSONNEL: None

B. (U) OPERATIONS: None

C. (U) TRAINING AND ORGANIZATION: None

D. (U) INTELLIGENCE: None

E. (U) LOGISTICS: None

F. (U) SIGNAL:

Recommendations:

1. Recommend emphasis be continued to obtain the SSB radio equipment, AN/MRC-95 or AN/VSC-2.

2. Recommend additional emphasis be placed on obtaining sufficient trained ATC teams with equipment to provide proper air traffic control.

3. USAF teams establishing ATC or navigational aids at joint operated tactical airfields must be coordinated with the Army elements.

35

4. The Flight Information Notification system must be expanded to serve each aircraft. Special emphasis must be made to communicate the information to the aviation elements organic to remotely located infantry units.

G. (U) MEDICAL:

1. Advise and teach preventive measures to all incoming personnel as part of an in-country orientation, the possibilities or side effects of food poisoning.

2. Close supervision of food handlers and mess hall protocol.

NICHOLAS G. PSAKI
COL, Infantry
Commanding

ANNEXES: A - 12th Combat Aviation Group Structure
B - 12th Combat Aviation Group Troop List
C - After Action Report CH-47 (Chinook) Operations, OPERATION JUNCTION CITY, Phase I.
D - 12th Combat Aviation Group Statistics

DISTRIBUTION:
2 copy to CG USARPAC
3 " to DOG USARV
2 " thru II FFV to ACSFOR
1 " thru Channels to ACSFOR

INFO COPY
CG, II FFV
CG, 1st Avn Bde
CG, USAAVNS
CO, 11th Cbt Avn Bn
CO, 145th Cbt Avn Bn
CO, 222nd Cbt Avn Bn
CO, 269th Cbt Avn Bn
CO, 214th Cbt Avn Bn

37

AVFBC-H 1st Ind
SUBJECT: Operational Report-Lessons Learned for Period Ending 30 April 1967, 12th Combat Aviation Group

DA, HQ II FFORCEV, APO San Francisco 96266 7 JUN 1967

TO: Assistant Chief of Staff for Force Development, Dept of the Army, Washington, D.C. 20310

1. (U) Attached report is forwarded.

2. (U) This headquarters concurs with the commander's recommendations and/or comments. Many of the observations are in the form of opinions and most have been stated, in one form or another, previously; nevertheless, this headquarters does not take exception to any of the expressed views. Further, it appears that no action is required by this headquarters on any comment.

FOR THE COMMANDER:

2 Incl
as

JAMES A. ULVENES
Capt, AGC
Asst. AG

38

AVBA-C (2 Jun 67) 2nd Ind
SUBJECT: Operational Report-Lessons Learned Period Ending 30 April 1967 (RCS-CSFOR 67)

HEADQUARTERS, 1ST AVIATION BRIGADE, APO 96307

THRU: Commanding General, U. S. Army Vietnam, ATTN, AVBOG-DH, APO 96307
Commander in Chief, U. S. Army Pacific, ATTN: GPOP-MH, APO 96307

TO: Assistant Chief of Staff Force Development, Department of the Army (ACSFOR DA), Washington, D. C. 20310

1. (U) This headquarters has reviewed subject report of the 12th Combat Aviation Group as indorsed and considers it to be adequate and concurs with the contents except as noted.

2. (C) The following additional comments are considered pertinent:

a. Section X, para E1 (a) (1), page 4: A proposed Modified Table of Organization and Equipment has been prepared by this headquarters which will reorganize all Assault Support Helicopter companies to a common structure and strength. Commands received from subordinates are being reviewed at this time. MTOE will be forwarded at earliest practicable date.

b. Section X, para E1 (a)(2), page 4: The 187th Aviation Company was reorganized in February 1967 by GO 52, Headquarters Third United States Army, under MTOE 1-77G, USCONARC 3/67. In April 1967, USCONARC requested DA to publish a directive to reorganize this and other newly activated organizations under MTOE 1-77G, USCONARC 4/67 which would configure these organizations identical to all other such units in RVN. This headquarters will initiate action to obtain latest reorganization General Order or clarification of status of these units.

c. Section X, para G 4a, page 17: A new system of determining "GO-NO-GO" conditions for UN-1 helicopters has been developed and the information disseminated to all brigade units.

d. Section X, page G 4b, page 17: Additional fixed wing aircraft have been requested by USARV in an effort to reduce the administrative flying hours now being flown on UH-1 helicopter.

e. Section X, para N 2a, page 21: Newly arrived units have been issued body armor by 1st Log Command. However, this has placed a considerable impact on 1st Log's stocks. S-4 of 12th Group has sent this headquarters a letter listing all their shortages which we have indorsed to Director of Supply, 1st Log Command, requesting supply release.

39

AVBA-C

SUBJECT: Operational Report - Lessons Learned Period Ending 30 April 1967 (RCS-CSFOR 67)

f. Section X, para H 2b, page 21: Ballistic Helmets: All of 12th Group's requirements have been filled with the exception of two newly arrived units. The new unit's requirements were furnished to Director of Supply, 1st Log Command, for issue. Commodity manager for subject items cannot wear the medium size.

g. Section X, para H 2c, page 21: Tool Kits for 2.75 Rockets: Initial issue was made; units were instructed to order replacements as needed.

h. Section X, para H 2d, page 21: 12th Group has also been issued 47 each 30/40 GPM pumps in the month of May. This fills their requirement for 30/40 OPM pumps. Filter elements have arrived in country and requisitions are being filled at this time.

i. Section X, para H 2f, page 21: Availability of ammunition continues to improve and units are not experiencing shortages at this time.

j. Section X, para N 2g, page 22: Evaluation of the CAR-15 has been completed and recommendations submitted on BOI.

k. Section I, para H 2h, page 22: Authority for Equipment in Excess of TOE: This new procedure is in effect. Units are learning to live with it without any serious adverse effect in the accomplishment of their missions. The moratorium on submission of MTOE/MTDA has not been lifted.

l. Section I, para X 2, page 24: Correspondence has been forwarded to USARV requesting ATC representation be included in future operational plans and closer ATC coordination between 7th Air Force and USARV. USARV has forwarded a similar request to MACV. AN TRN 25 Beacon deficiencies have been well documented since 23 March 67 with messages and letters to CG USAMC, US ATECON, USARV Avn, and USARV Avienics. AMC and ECOM have given top priority to correcting TRN 25 deficiencies. Request for adequate NDB was forwarded to USARV on 12 April 1967. Recommended field test (TRN 25 NDB) with outline program was submitted to USARV on 10 April 1967. Request for additional ATC assets has been forwarded as outlined in 1st Aviation Brigade ORLL, this period, Para 7b (L) thru (4), page 7.

m. Section I, para I 3, page 25: Additional TT equipment has been requested and inserted into proposed AOD MTOE. Command TT system will remain primary FIN distribution system until requested equipment arrives in country. A joint service SE Asia NOTAM Facility Evaluation

40

AVBA-C
SUBJECT: Operational Report-Lessons Learned Period Ending 30 April 1967 (RCS-CSFOR 67)

Group met 30 March 67 through 2 April 67 to improve NOTAM system. Their recommendations are now in effect.

n. Section I, para X 6, page 26: USARV and 34th Gen Spt Gp have been made aware of these equipment shortages and have taken action to alleviate them.

o. Section II, Part I, para E 2, page 32: Concur with comments contained in para 2c. Message dated 5 May 1967 and letter dated 1 June 67 informed subordinate units of the 1st Aviation Brigade of procedures necessary to obtain construction for incoming units.

p. Section IX, Part II, para F, page 34: Recommendations: The AN/VXC-2 HF, SSB Radio sets will be ready for issue on 15 June 1967. The 12th Group will be issued an initial 6 sets by the end of June. Additional sets will be issued at the rate of 5 per month. USARV Signal has informed this headquarters that shipping instructions have been sent to AMC for the AN/MRC-95.

q. Section II, Part IX, para G, page 35: Concur in the recommendations stated which are established policy within 1st Aviation Brigade.

FOR THE COMMANDER:

1 Incl
as

LEWIS T. TURNER
Captain, AGC
Asst Adjutant General

41

AVHGC-DST (2 Jun 67) 3d Ind
SUBJECT: Operational Report-Lessons Learned for the Period Ending 30 April 1967 (RCS CSFOR-65) (U)

HEADQUARTERS, UNITED STATES ARMY VIETNAM, APO San Francisco 96375 20 AUG 1967

TO: Commander in Chief, United States Army, Pacific, ATTN: GPOP-OT, APO 96558

1. (U) This headquarters has reviewed the Operational Report-Lessons Learned for the period ending 30 April 1967 from Headquarters, 12th Combat Aviation Group as indorsed.

2. (C) Pertinent comments follow:

a. Reference item concerning non-UH-1 qualified aviation transition training, page 31, paragraph c.

(1) Nonconcur.

(2) Aviators are qualified according to the requirements of the requisition against which they are assigned. Not all rotary wing aviator assignments require UH-1 qualification. The USACONARC training base is not able at this time to provide blanket UH-1 qualification training.

(3) A non-UH-1 qualified aviator is normally not assigned against a requisition requiring that qualification. Exceptions do occur. There are two principal reasons for the exceptions, they are:

(a) Acceptance of a non-UH-1 trained aviator by receiving unit in preference to continued delay in the assignment of a UH-1 qualified aviator.

(b) The present handling of the infusion program in which some non-UH-1 qualified aviators are moved to UH-1 slots.

(4) This headquarters will endeavor to eliminate or minimize this problem.

b. Reference item concerning flight information notification, page 35, paragraph 4.

(1) Concur.

(2) 12th Avn Gp has been designated the NOTAM agency for II FFORCEV and the NOTAM system has been established. The NOTAM system for all units in RVN is presently undergoing modification to insure widest coverage.

42

AVHGC-DST

20 AUG 1967

SUBJECT: Operational Report-Lessons Learned for the Period Ending 30 April 1967 (RCS CSFOR-65) (U)

(3) This headquarters will continue to monitor the revision of the NOTAM system to insure complete coverage.

c. Reference item concerning SSB Radio equipment, paragraph F1, page 34. AN/USC-2's are presently arriving in country and replacing the AN/MRC-95.

d. Reference item concerning food poisoning paragraph F1, page 33 and paragraph G1, page 35. Concur in part. The observations recorded in paragraph F1 are valid. The recommendations in paragraph G1 should be implemented by the receiving unit. It is a command responsibility to inform personnel of health hazards and dependence should not be placed on the replacement centers to provide a detailed in-country orientation. Personnel are tired and somewhat confused while traveling through the replacement stream. This headquarters will continue its efforts to upgrade the instruction offered in-country arrivals.

FOR THE COMMANDER:

E. J. KENNEDY
Cpt, ACC
Asst Adjutant General

43

GPOP-DT(2 Jun 67) 4th Ind (U)
SUBJECT: Operational Report for the Quarterly Period Ending 30 April 1967 from HQ, 12th Cbt Avn Gp (RCS CSFOR-65) (U)

HQ, US ARMY, PACIFIC, APO San Francisco 96558 1 SEP 1967

TO: Assistant Chief of Staff for Force Development, Department of the Army, Washington, D. C. 20310

This headquarters has reviewed subject report and concurs in the report as indorsed.

FOR THE COMMANDER IN CHIEF:

1 Incl
nc

HEAVRIN SNYDER
CPT, AGC
Asst AG

12TH COMBAT AVIATION GROUP AVIATION STRUCTURE

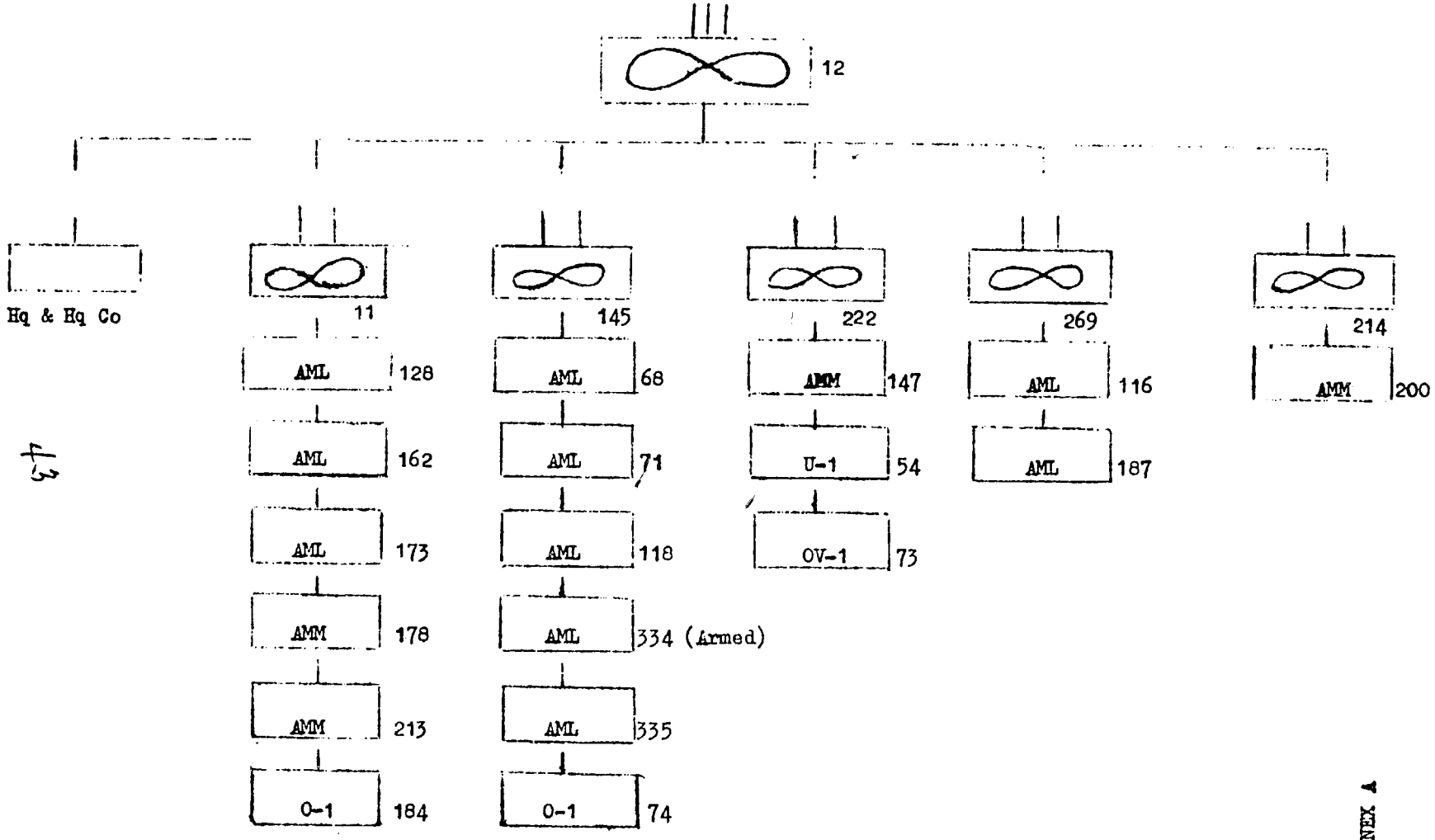

12TH GROUP TROOP LIST

| UNIT | LOCATION |
|---|---|
| 12TH CBT AVN GP | Long Binh |
| HQ & HQ Co | Long Binh |
| 391st QM Det (PETRL) | Long Binh |
| 11TH CBT AVN BN | Phu Loi |
| HQ & HQ Det | Phu Loi |
| 390th QM Det (PETRL) | Phu Loi |
| 128th Aslt Hel Co | Phu Loi |
| 285th SC Det (RL) | Phu Loi |
| 393rd TC Det (KD) | Phu Loi |
| 432nd Med Det (OA) | Phu Loi |
| 162nd Aslt Hel Co | Phuoc Vinh |
| 407th TC Det (KD) | Phuoc Vinh |
| 450th SC Det (RL) | Phuoc Vinh |
| 758th Med Det (OA) | Phuoc Vinh |
| 173rd Aslt Hel Co | Lai Khe |
| 408th TC Det (KD) | Lai Khe |
| 451st SC Det (RL) | Lai Khe |
| 759th Med Det (OA) | Lai Khe |
| 178th Aslt Spt Hel Co | Phu Loi |
| 400th TC Det (AB) | Phu Loi |
| 184th Recon Apl Co | Phu Loi |
| 243rd SC Det (RL) | Phu Loi |
| 213th Aslt Spt Hel Co | Phu Loi |
| 329th TC Det (AB) | Phu Loi |
| 145TH CBT AVN BN | Bien Hoa |
| HQ & HQ Co | Bien Hoa |
| 87th QM Det (PETRL) | Bien Hoa |
| 145th Sec Plat | Bien Hoa |
| 68th Aslt Hel Co | Bien Hoa |
| 282nd SC Det (RL) | Bien Hoa |
| 391st TC Det (KD) | Bien Hoa |
| 430th Med Det (OA) | Bien Hoa |
| 71st Aslt Hel Co | Bien Hoa |
| 94th SC Det (RL) | Bien Hoa |
| 151st TC Det (KD) | Bien Hoa |

47

12TH GROUP TROOP LIST (CONT'D)

| UNIT | LOCATION |
|---|---|
| 74TH RECON APL CO | Phu Loi |
| 563rd TC Det (KD) | Phu Loi |
| 118TH ASLT HEL CO | Bien Hoa |
| 93rd Med Det (OA) | Bien Hoa |
| 198th SC Det (RL) | Bien Hoa |
| 573rd TC Det (KD) | Bien Hoa |
| 334TH AVN CO (ARMED) | Bien Hoa |
| 320th SC Det (RL) | Bien Hoa |
| 571st TC Det (KD) | Bien Hoa |
| 335TH ASLT HEL CO | Bien Hoa |
| 25th Med Det (OR) | Bien Hoa |
| 166th TC Det (KD) | Bien Hoa |
| 234th SC Det (RL) | Bien Hoa |
| 214TH CBT AVN BN | Bear Cat |
| Hq & Hq Det | Bear Cat |
| 200TH ASLT SPT HEL CO | Bear Cat |
| 611th TC Det | Bear Cat |
| 222ND CBT AVN BN | Vung Tau |
| 85th Med Det (OR) | Vung Tau |
| 54TH AVN CO (FW) | Vung Tau |
| 255th TC Det (KC) | Vung Tau |
| 73rd AVN CO (AS) | Vung Tau |
| 147TH ASLT SPT HEL CO | Vung Tau |
| 171st TC Det (AB) | Vung Tau |
| 772nd Med Det (OA) | Vung Tau |
| 269TH CBT AVN BN | Cu Chi |
| Hq & Hq Det | Cu Chi |
| 116th ASLT HEL CO | Cu Chi |
| 283rd SC Det (RL) | Cu Chi |
| 392nd TC Det (KD) | Cu Chi |
| 431st Med Det (OA) | Cu Chi |
| 187TH ASLT HEL CO | Tay Ninh |
| 1st SC Det (RL) | Tay Ninh |
| 602nd TC Det (KD) | Tay Ninh |

ANNEX B

DEPARTMENT OF THE ARMY
HEADQUARTERS, 222ND AVIATION BATTALION
APO 96291

AVGC-I 19 April 1967

SUBJECT: After Action Report, CH-47 (Chinook) Operations, OPERATION JUNCTION CITY, Phase I

TO: Commanding Officer
12th Combat Aviation Group
ATTN: AVGC-SC
APO 96491

1. General: During phase I, Operation Junction City, 22 Feb - 6 Mar 67, CH-47 (Chinook) support was consolidated under the control of 222d Combat Support Aviation Battalion. This was a new concept of CH-47 employment being employed for the first time in a large scale tactical operation.

2. Organization: The 222d Combat Support Aviation Battalion with the 147th Assault Support Helicopter Company (ASHC) organic, was augmented with three additional Assault Support Helicopter Companies placed under the Operational Control (OPCON) of the 222d Combat Support Aviation Battalion. These additional companies were the 178th ASHC and the 213th ASHC from the 11th Combat Aviation Battalion and the 180th ASHC from the 10th Combat Aviation Battalion. This organization was the control headquarters for all CH-47 support during this phase of the operation. Operational control of these units was assumed on 18 Feb for the 178th ASHC and 213th ASHC and 20 Feb for the 180th ASHC. The 180th ASHC was released from OPCON on 25 Feb and 178th ASHC and 213th ASHC were released on 6 Mar 67.

3. Communications and Operational Procedures: See Inclosure 1.

4. Results and Support Rendered: The effectiveness of the centralized organization of CH-47 (Chinook) operation was considered to be excellent. The commanding Officer of this organization was able to devote his entire effort to insuring effective medium helicopter support, not being distracted by extensive planning requirements for assault helicopter operations conducted concurrently. The battalion operations center (BOC) was also specialized and tailored for CH-47 operations, having an officer experienced in these operations on duty 24 hours a day. This freed the AAE at II FFV from the daily requirement of assigning missions down to the company and limited their requirement to approval or disapproval of mission requests. On D-Day, the CH-47's flew a total of 428 sorties in 194 flight hours carrying 888 passengers and 774 tons of cargo. These sorties were preplanned and closely integrated in the assault landing schedules of the supported forces and provided timely emplacement of supporting artillery and effective resupply. Total hours flown during the period 22 Feb - 6 Mar 67 were 1131 and provided the transport of 5568 tons of cargo and 6387 passengers.

AVGC-I

47

SUBJECT: After Action Report, CH-47 (Chinook) Operations, OPERATION JUNCTION CITY, Phase I

5. Advantages and Disadvantages of this organization:

a. Advantages:

(1) Provides a single command control element for all CH-47 operations which intensifies coordination and supervision of this support.

(2) Facilitates more effective tailoring of support to requirements, especially effective when the mission requires the massing of two or more companies in support.

(3) More effective liaison is established in that all liaison officers are experienced in CH-47 operations. Liaison officers were provided to each major tactical headquarters on a continuing basis and were available to assist in planning CH-47 requirements whenever needed.

(4) Higher headquarters was relieved from the requirement for detailed planning and assignment of missions making their staff available for other pressing requirements of planning and supervision.

(5) Most effective when Chinooks are supporting large tactical operations which require extensive staff planning and supervision of Chinook support.

b. Disadvantages:

(1) Supported units must coordinate aviation support through more than one liaison officer. When Assault Helicopter Companies and Assault Support Helicopter Companies are both being used, the supported unit must coordinate with two or more liaison officers. In the composite battalion this is done by one liaison officer.

(2) Lack of organic gunships in this battalion required coordination with other battalions for gunship support. During large scale operations, gunships are required daily to accompany and protect CH-47's operating in "hot" LZ's and PZ's.

(3) This battalion has no organic pathfinder detachment. This obstacle was overcome by borrowing nine (9) pathfinders from the 269th Combat Aviation Battalion (one officer and eight enlisted men) and coordinating use of pathfinders assigned to the various companies. The 269th Combat Aviation Battalion can not be expected to assist in this manner in the future as they will have their own operational requirements. During this period, the 269th Combat Aviation Battalion was still in the training and organization process which made their pathfinder detachment available.

SUBJECT: After Action Report, CH-47 (Chinook) Operations, OPERATION JUNCTION CITY, Phase I

(4) The 222d Combat Support Aviation Battalion has one UH-1C assigned for command and control requirements. While planning provided continuous availability of this aircraft throughout the period, normal availability of this type aircraft would evidence a requirement for a minimum of 2 UH-1C aircraft to assure the availability of one at all times. There are additional UH-1C's available in the assigned companies (one per ASHC) but their use for Battalion C&C would reduce the company liaison and command control capability which includes emplacement of pathfinders in PZ's and LZ's, coordination of missions with supported units, and maintenance support to aircraft in field locations when needed.

6. Discussion: The assignment of all Assault Support Helicopter Companies under one command control headquarters is an extremely effective means of employing these assets during large scale operations. It provides a CH-47 experienced staff to plan and supervise complicated support operations without diluting the planning capability of the Assault Helicopter Battalions. It provides the specialized liaison required by supported units. It relieves higher headquarters of the detailed work of mission assignment and frees them for other planning and supervision tasks. It provides a point of contact where the total Chinook capability can be evaluated, manipulated and supervised. It is especially effective when support requirements indicate the massing of efforts of more than one company. This employment procedure requires greater communications support for command and control as well as increased requirements for CH-47 employment during normal operations over a widespread area appears to be the composite battalion which would provide all aviation support to the area. There is a requirement for organic gunships to make the mission planning for gunship support of CH-47 operations independent of the Assault Helicopter Battalion's plans for gunship utilization.

7. Recommendations:

a. That the consolidation of CH-47 (Chinook) support under one command headquarters during future large scale tactical operations be adopted as the standard employemnt procedure.

b. That the 222d Combat Support Aviation Battalion be the headquarters assigned this mission in future large scale tactical operations. The missions of the other organic companies assigned the 222d Combat Support Aviation Battalion, the 73rd Aviation Company (AS) and 54th Aviation Company (AM-FW), do not detract from this battalion's capability to operate as the control headquarters when CH-47 operations are consolidated.

SUBJECT: After Action Report, CH-47 (Chinook) Operations, OPERATION JUNCTION CITY, Phase I

c. That a minimum of one additional UH-1C be assigned this Battalion to provide a greater capability to effect the command and control requirements of this organization on a continuous basis.

d. That an armed helicopter platoon be assigned to the 222d Combat Support Aviation Battalion.

e. That the Pathfinder augmentations, para 09 TOE 1-256F with equipment, be authorized this battalion.

f. That two (2) additional liaison officers be authorized to meet the mission requirements of this method of employment.

g. That the composite battalion organization be retained as the normal employment of Chinook assets (i.e., 11th Combat Aviation Battalion with both Assault and Assault Support Helicopter Companies assigned on an area basis.

1 Incl

/s/Thomas E. Thompson
/t/ THOMAS E. THOMPSON
LTC, Infantry
Commanding

A True Copy

Glelma O. Helmick
GLELMA O. HELMICK
MAJ, Arty

INCLOSURE 1

After Action Report - CH-47 (Chinook) Operations, OPERATION JUNCTION CITY, Phase I

1. Purpose: This inclosure is to provide a detailed description of the organization, communications, operational procedures and results of the experimental CH-47 (Chinook) Battalion concept employed during Phase I, OPERATION JUNCTION CITY.

2. Organization: The 222d Combat Support Aviation Battalion was established as the control headquarters of all CH-47 (Chinook) operations during Phase I of this operation. Assault Support Helicopter Companies involved were the 147th (normally assigned to the 222d Combat Support Aviation Battalion), the 180th (normally assigned to the 10th Combat Aviation Battalion), the 178th and 213th (both normally assigned to the 11th Combat Aviation Battalion. the 178th, 180th and 213th companies being placed under operational control (OPCON) of the 222d Combat Support Aviation Battalion. The operations were conducted from a forward Battalion Operations Center (BOC) established at Phu Loi. Operational elements of the 147th ASHC were moved to Phu Loi which is also the base for the 178th ASHC and the 213th ASHC. the 180th ASHC operational element was located at Cu Chi.

3. Communications:

a. Telephone: Direct communication lines were established between the BOC and all companies and between BOC and II FFV AAE. This was accomplished by use of wire lines at Phu Loi and by means of priority VHF relay circuits (hot lines) between BOC and the 180th at Cu Chi and the AAE at II FFV headquarters. These circuits, once established, remained in operation until their use was terminated.

b. Radio: A battalion command net (FM) was established with each company and BOC as stations in the net on a 24 hour basis. This net was used as a back-up flight following net (FM) for the aircraft of the battalion. BOC also operated a radio in the 12th Combat Aviation Group Command Net (FM). BOC operated a UHF radio net used for back-up flight following and command and control. BOC also operated in the 12th Combat Aviation Group Command Nets for HF and AM. All nets remained operational throughout the period although traffic on the HF and AM nets was limited to commo checks. Each company operated FM and UHF nets which provided flight following for company aircraft.

4. Liaison: A 222d Aviation Battalion representative was sent to each supported division headquarters and remained with that headquarters throughout the period. He was available to assist in planning Chinook utilization within the division and provided a contact for the battalion through which problem areas could be resolved. Additionally, supporting companies furnished liaison officers to supported units on request or when mission requirements indicated a need.

53

5. Battalion Operations Center (BOC): The BOC was staffed on a 24 hour basis by a Chinook experienced officer and enlisted operations personnel. A daily journal was maintained and all Operational reports were consolidated here for submission to higher headquarters. Approved mission requests were received at the BOC from II FFV and assigned to the companies. When necessary liaison was established with supported units. A situation map of the Operational Area was maintained at the BOC and updated from both an operational and intelligence standpoint daily. Aircraft availability and mission progress status boards were maintained continuously to provide a current picture of Chinook capabilities at all times.

6. Employment: During D-Day operations and on D+1, the companies were placed in Direct Support of the divisions, the 178th and 213th ASHC's DS to 1st Infantry Division, the 147th and 180th ASHCs DS to 25th Infantry Division. After this initial desplacement of units, supplies and equipment into the forward area, missions were requested through normal channels and assigned to companies by BOC.

7. Units Supported: CH-47 support was furnished to two divisions, the 1st Infantry Division with the 173rd Light Infantry Brigade attached and the 25th Infantry Division with the 196th Light Infantry Brigade, the 3rd Brigade of the 4th Infantry Division and the 11th Armored Cav Regiment attached. In addition to the support of the Junction City Operation, CH-47 support was also provided to the 9th Infantry Division, III and IV Corps Headquarters and MACV Headquarters.

8. Support Rendered Junction City:

| | 1st Inf Div | | | 25th Inf Div | | |
|---|---|---|---|---|---|---|
| | PAX | TONS | HOURS | PAX | TONS | HOURS |
| D-Day | 472 | 466 | 130.8 | 416 | 308 | 62.5 |
| D+1 | 395 | 2355 | 93.8 | 70 | 142 | 27.9 |
| Total 22 Feb-6 Mar | 4108 | 2822 | 644.9 | 2279 | 2746 | 486.5 |

9. Summary of Support: The Junction City operation was primary user of CH-47 support during the period 22 Feb - 6 Mar 67 with 6387 passengers transported, 5568 tons of cargo hauled and 1131.4 hours of CH-47 time flown in its support. During this same period however, 3,786 passengers, 1173 tons and 330.6 hours were flown for units involved in other than Junction City Operations. Total passengers hauled during this period - 10,173; total tons hauled -6,741; and total hours flown - 1,462.

| | PASSENGERS | TONS | HOURS |
|---|---|---|---|
| Junction City | 6387 | 5568 | 1131.4 |
| Other | 3786 | 1173 | 330.6 |
| Total | 10,173 | 6741 | 1462.0 |

12TH COMBAT AVIATION GROUP STATISTICS

OPERATIONAL HOURS

| RW | FW | TOTAL |
|---|---|---|
| 74,290 | 25,202 | 99,492 |

SORTIES FLOWN

| RW | FW | TOTAL |
|---|---|---|
| 223,093 | 21,441 | 244,534 |

COMBAT SORTIES FLOWN

| RW | FW | TOTAL |
|---|---|---|
| 109,656 | 0 | 109,656 |

PASSENGERS CARRIED

| RW | FW | TOTAL |
|---|---|---|
| 377,348 | 19,226 | 396,574 |

CARGO TRANSPORTED (TONS)

| RW | FW | TOTAL |
|---|---|---|
| 49,637 | 503 | 50,140 |

A/C HIT BY GROUND FIRE

| RW | FW | TOTAL |
|---|---|---|
| 275 | 27 | 302 |

COMBAT LOSSES (ACFT)

| RW | FW | TOTAL |
|---|---|---|
| 19 | 1 | 20 |

AMMUNITION EXPENDED

| 7.62MM | 40mm | 2.75" | 50cal. |
|---|---|---|---|
| 6,456,416 | 53,773 | 35,468 | 19,302 |

ANNEX D

53

## 12TH COMBAT AVIATION GROUP STATISTICS

### OPERATIONAL HOURS

| RW | FW | TOTAL |
|---|---|---|
| 74,290 | 25,202 | 99,492 |

### SORTIES FLOWN

| RW | FW | TOTAL |
|---|---|---|
| 223,093 | 21,441 | 244,534 |

### COMBAT SORTIES FLOWN

| RW | FW | TOTAL |
|---|---|---|
| 109,656 | 0 | 109,656 |

### PASSENGERS CARRIED

| RW | FW | TOTAL |
|---|---|---|
| 377,348 | 19,226 | 396,574 |

### CARGO TRANSPORTED (TONS)

| RW | FW | TOTAL |
|---|---|---|
| 49,637 | 503 | 50,140 |

### A/C HIT BY GROUND FIRE

| RW | FW | TOTAL |
|---|---|---|
| 275 | 27 | 302 |

### COMBAT LOSSES (ACFT)

| RW | FW | TOTAL |
|---|---|---|
| 19 | 1 | 20 |

### AMMUNITION EXPENDED

| 7.62MM | 40mm | 2.75" | 50cal. |
|---|---|---|---|
| 6,456,416 | 53,773 | 35,468 | 19,302 |

Downgraded at 3 year Intervals
Declassified after 12 years
DOD DIR 5200.10