UNCLASSIFIED

AD NUMBER
AD367881
CLASSIFICATION CHANGES
TO: unclassified
FROM: confidential
LIMITATION CHANGES
TO: Approved for public release, distribution unlimited
FROM: Distribution authorized to U.S. Gov't. agencies and their contractors; Administrative/Operational Use; OCT 1965. Other requests shall be referred to Office of Naval Research, One Liberty Center, 875 North Randolph Street, Arlington, VA 22203-1995.
AUTHORITY
onr ltr, 15 jun 1977; onr ltr, 15 jun 1977

THIS PAGE IS UNCLASSIFIED

GENERAL DECLASSIFICATION SCHEDULE

IN ACCORDANCE WITH
DOD 5200.1-R & EXECUTIVE ORDER 11652

THIS DOCUMENT IS:

CLASSIFIED BY_____

Subject to General Declassification Schedule of Executive Order 11652-Automatically Downgraded at 2 Years Intervals- DECLASSIFIED ON DECEMBER 31,_____.

BY

Defense Documentation Center
Defense Supply Agency
Cameron Station
Alexandria, Virginia 22314

THIS REPORT HAS BEEN DELIMITED
AND CLEARED FOR PUBLIC RELEASE
UNDER DOD DIRECTIVE 5200.20 AND
NO RESTRICTIONS ARE IMPOSED UPON
ITS USE AND DISCLOSURE.

DISTRIBUTION STATEMENT A

APPROVED FOR PUBLIC RELEASE;
DISTRIBUTION UNLIMITED.

SECURITY MARKING

The classified or limited status of this report applies to each page, unless otherwise marked.
Separate page printouts MUST be marked accordingly.

THIS DOCUMENT CONTAINS INFORMATION AFFECTING THE NATIONAL DEFENSE OF THE UNITED STATES WITHIN THE MEANING OF THE ESPIONAGE LAWS, TITLE 18, U.S.C., SECTIONS 793 AND 794. THE TRANSMISSION OR THE REVELATION OF ITS CONTENTS IN ANY MANNER TO AN UNAUTHORIZED PERSON IS PROHIBITED BY LAW.

NOTICE: When government or other drawings, specifications or other data are used for any purpose other than in connection with a definitely related government procurement operation, the U. S. Government thereby incurs no responsibility, nor any obligation whatsoever; and the fact that the Government may have formulated, furnished, or in any way supplied the said drawings, specifications, or other data is not to be regarded by implication or otherwise as in any manner licensing the holder or any other person or corporation, or conveying any rights or permission to manufacture, use or sell any patented invention that may in any way be related thereto.

CONFIDENTIAL

Copy No. 7 of 150

367881

HUMAN FACTOR PROBLEMS IN ANTI-SUBMARINE WARFARE

Technical Report 206-31

DOPPLER DISCRIMINATION IN RELATION TO ECHO DURATION AND DISPLAY FREQUENCY (U)

DDC
RECEIVED
DEC 15 1965
TISIA B

GROUP 4
Downgraded at 3 year intervals;
declassified after 12 years

HUMAN FACTORS RESEARCH, INCORPORATED
SANTA BARBARA • LOS ANGELES • SAN DIEGO

CONFIDENTIAL

CONFIDENTIAL

HUMAN FACTOR PROBLEMS IN ANTI-SUBMARINE WARFARE

Technical Report 206-31

DOPPLER DISCRIMINATION IN RELATION TO ECHO DURATION AND DISPLAY FREQUENCY (U)

Albert Harabedian
and
Raymond A. Gavin

Prepared for

Personnel and Training Branch
Psychological Sciences Division
Office of Naval Research
Department of the Navy

by

Human Factors Research, Incorporated
3040 State Street
Santa Barbara, California 93105

October, 1965
Contract Nonr 2649(00)
NR 153-199

CONFIDENTIAL

This document contains information affecting the national defense of the United States within the meaning of the Espionage Laws, Title 18, U.S.C., Sections 793 and 794, the transmission or revelation of which in any manner to an unauthorized person is prohibited by law.

Reproduction in whole or in part is permitted
for any purpose of the United States Government.

This research was sponsored by the Office of
Naval Research under contract Nonr 2649(00),
ONR Authority identification NR 153-199.

ACKNOWLEDGMENTS

The staff expresses its appreciation to CAPT. I. Finn, Commanding Officer, U. S. Navy Service School Command, LCDR E. C. Raymer, Training Officer, and Mr. Dale Lovell, civilian educational advisor, for their assistance in making this study possible. In addition, the facilities and personnel made available by Lt. Busenlehner, Officer in Charge, Radioman "A" School, and the services of RMC Bacsi and RMC Mariani are gratefully acknowledged.

Table of Contents

	Page
ACKNOWLEDGMENTS	iii
List of Tables and Figures	v
I. SUMMARY AND IMPLICATIONS	1
Background	1
Purpose	1
Results	2
Recommendations	3
II. INTRODUCTION	4
III. METHOD	7
Characteristics of the Simulated Returns	7
Test Construction	13
Test Administration	13
Subjects	14
IV. RESULTS	15
Display Frequency and Accuracy of Doppler Recognition	15
Speed Translation and Accuracy of Doppler Recognition	16
V. CONCLUSIONS AND DISCUSSION	19
REFERENCES	22

List of Tables and Figures

Table		Page
I	Echo durations and amounts of doppler of test items for each speed condition	11
II	Means and standard deviations of the number of correct responses for each speed at the two display frequencies	15
III	Analysis of variance of the number of correct doppler judgments	16

Figure		
1	Block diagram of the equipment used to simulate reverberations and echoes at various display frequencies	8
2	The figure shows the characteristics of the shortest echo within each speed condition and an example of a longer echo	12
3	Doppler recognition accuracy for each 7 echo durations and 3 speed conditions	17

DOPPLER DISCRIMINATION IN RELATION TO ECHO DURATION AND DISPLAY FREQUENCY (U)

I. SUMMARY AND IMPLICATIONS

Background

The recognition of doppler in signals returned from sonar targets remains the most important single clue to target movement (and classification) available from contemporary active sonar systems. To date no mechanical or electronic device has been developed that discriminates doppler as well as properly selected operators. A desirable objective, then, is to enhance the display of doppler to the operator in whatever ways possible.

It has been suggested that the discriminability of doppler can be improved through speed translation--a process in which a recording is made of the reverberations and echo and this recording is played back to the operator at a faster speed than the original display. This has the effect of increasing doppler shift by the same factor as the difference in speed employed between original recording and playback. Consequently, it should improve doppler recognition. However, previous studies of speed translation have failed to show the expected improvement. This is thought to be due to the fact that speeding the auditory display of a sonar return shortens the echo duration and increases the frequencies at which the echo and reverberations are to be compared. The latter effects have been shown to affect pitch discrimination of pure tones adversely.

Purpose

The objective of the present experiment was to determine whether the hypothesized beneficial effects of speed translation could be achieved if, after speeding, the recorded sonar signal was heterodyned back down to an optimal display frequency. In

addition, it was designed to provide evidence on the question of the relative effects of doppler shift and echo duration on doppler recognition accuracy. Finally, the study included an examination of the relative merits of displaying sonar signals at 800 cps and 500 cps.

Results

1. Double-speeding recorded echoes improved doppler discrimination for echo durations between 40 and 100 ms when the speeded signal was heterodyned back to an effective presentation frequency (500 cps or 800 cps).

2. There was no systematic improvement in doppler recognition performance for speeded signals when echo duration was in excess of 100 ms. Signals of these durations are near the maximum to be expected from submarine targets and represent a less severe doppler discrimination problem than do the shorter ones.

3. As a part of the investigation of echo length on doppler discrimination, the effects of half-speeding were investigated since this doubles the displayed echo length. Half-speeding was found to adversely affect doppler discrimination at all echo durations studied. Apparently the detrimental effects of halving the amount of doppler more than offset the beneficial effects of doubling the durations.

   In addition it was found that doppler discrimination was less accurate for echoes in excess of 160 ms than it was for echoes of 120 ms and 160 ms. A possible explanation is that the coherence of the

echo is lost if it is extended too much, making doppler recognition more difficult.

4. Although failing to reach statistical significance, the difference between doppler recognition performance was systematically better with signals presented at 500 cps than with those presented at 800 cps.

Recommendations

1. Provision should be made for the use of speed translation as an aid to doppler discrimination in sonar analysis centers and its use should be considered in new equipment design.

2. Speed translation systems should always provide for heterodyning the speeded signal back to an optimal display frequency.

3. From the viewpoint of maximizing doppler discrimination, audio displays in active sonar systems should be designed with a central display frequency of approximately 500 cps.

II. INTRODUCTION

The effectiveness of active sonar target classification is heavily dependent upon the determination of target movement. Although indications of target movement may be available from such displays as the PPI and the graphic range recorder, such information is often fortuitous (Mackie, Gavin & Parker, 1959) and the most important single indicator remains the dopplered echo and its accurate perception by the sonar operator. Because of this primary role of doppler recognition in target classification, it is vital that every research effort be made to improve its perception.

One method frequently mentioned for improving doppler discrimination is to increase the amount of displayed frequency shift by recording the reverberation and echo on tape and playing them back at a faster speed. If increased doppler were the only result of this technique, doppler recognition very likely would be improved; however, increasing the playback speed also increases the presentation frequency of the entire reverberation-echo pattern, and, at the same time, shortens the duration of the sounds to be compared.

For example, suppose a sonar return is composed of reverberations centered around 800 cps and an 80-ms echo centered around 810 cps. If the return were recorded and played back at twice the recording speed, the center frequency of the reverberations and echo would be 1600 and 1620 cps respectively. The doppler effect would be increased from 10 cps (810 minus 800 cps) to 20 cps (1620 minus 1600 cps), while the echo duration would be reduced from 80 ms to 40 ms. The increased frequency difference should improve doppler perceptibility although the shift to a higher display frequency and the shortening of the echo could have adverse effects.

Studies in which pure tones were used have shown that both the frequency at which tones are compared, as well as their

duration, affect pitch discrimination accuracy. Shower and Biddulf (1931), for instance, found that at frequencies above 800 cps the minimum number of cycles that can be discriminated reliably (Δf) increases with an increase in the frequency at which the tones were compared. For frequencies of 800, 1600, 2400 and 3200 cps (at 40-db sensation level) the Δf's were approximately 3.1, 3.6, 4.2 and 6.0 cps, respectively. If the possible adverse effects of shortening the echo on doppler discrimination are disregarded, this finding suggests that speed translation should enhance doppler discrimination because it will increase the difference in frequency between the reverberations and echo more than it will increase Δf. For example, quadrupling the playback speed should only double Δf (Δf for 800 cps = 3.1 cps and Δf for 3200 cps = 6.0 cps) but quadruple the apparent difference in pitch between the reverberations and echo.

Stevens and Davis (1947, p. 102) reported that for an 800-cps tone there is a slight loss in pitch discrimination as the duration of the tones being compared is shortened from about 370 ms to 100 ms and a large loss as the durations are shortened from about 100 ms to 25 ms. With a further reduction in duration to a few milliseconds, pitch discrimination is virtually lost. If we apply these results to doppler recognition, a task which typically involves echo durations of between 40 and 150 ms, we must predict that any speeded playback of the recorded return could adversely affect doppler recognition.

Harabedian and Parker (1961) previously studied the effects of speed translation using recorded sonar echoes at double-speed and half-speed. Doppler recognition was found to be less accurate under the double-speed condition than with normal presentation. There was no significant difference in performance between recordings presented at half-speed and normal speed.

These somewhat unexpected results were hypothesized as being due to the other effects of speed translation, namely, the changes

in echo duration and display frequency described above. Performance may have been inferior under the double-speed condition because halving the echo duration and raising the display frequency from 800 to 1600 cps more than offset the beneficial effect of doubling the amount of doppler. Conversely, performance under the half-speed and normal presentation was essentially the same because doubling the echo duration and lowering the display frequency from 800 to 400 cps offset the detrimental effect of halving the amount of doppler. At any rate, it was demonstrated that simple speed translation does not enhance doppler recognition. However, the relative effects on performance of changes in display frequency and echo duration as a result of speed translation were left unclear.

Although it does not seem feasible to control echo duration, it is possible to speed translate <u>without</u> changing the basic display frequency. This can be done by heterodyning the frequency of the speeded return back to that of the original display frequency. It was the primary purpose of the present study to determine whether this procedure might improve doppler recognition accuracy. Because the relative effects of echo duration and amount of doppler on recognition accuracy were unknown, both double-speed and half-speed playbacks were studied again.

The literature also suggests that doppler recognition may be enhanced by the use of display frequencies <u>lower</u> than the 800 cps now used on shipboard active scanning sonars. Gales (1963, p. 129) and Shower and Biddulf (1931) both report pitch discrimination to be slightly better at 500 cps than at 800 cps. In another study, Harabedian and Mackie (1963), using sea-recorded sonar returns and varying display frequencies from approximately 500 to 1000 cps, found doppler recognition to be slightly more accurate at 500 cps. But, in that study, only a small range of echo durations was used. Therefore, a second purpose of this study was to determine, using a greater range of echo durations, whether doppler discrimination is better at a display frequency of 500 cps or 800 cps.

III. METHOD

It was considered necessary to use stimuli (reverberations and echoes) whose duration and pitch shift could be strictly controlled. Since no sample of recorded target echoes taken at sea would meet this requirement, it was necessary to use synthetic signals that had frequency, bandwidth and signal-to-noise characteristics very similar to those typically produced by medium pulse SQS-23 returns.

A block diagram of the equipment used to simulate the required reverberation and echo characteristics is shown in Figure 1. The functions of the components of this equipment will be described as the various characteristics of the simulated returns are discussed below.

Characteristics of the Simulated Returns

The simultaneous effects of speed translation and heterodyning to the original display frequency both were simulated. For example, under the double-speed condition the simulated echoes were generated so as to have exactly 1/2 the duration of those under standard speed and corresponding changes in the time of onset and offset also were made. Under half-speed, the opposite changes in duration and rise time were made. The resulting reverberations and echoes were produced, as shown in Figure 1, at presentation frequencies of both 500 and 800 cps.

Bandwidth of the reverberations and echoes. The bandwidth of the reverberations and echoes was made comparable to that produced by a 30-ms transmission pulse at 5.0 kc. Bandwidth is equal to the reciprocal of the transmission pulse, or 33.3 cps in this case. Because the simulation equipment had 17 oscillators, it proved convenient to settle for bandwidth of 32 cps in the simulated signals. This was accomplished as follows.

For the standard-speed condition one oscillator in the bank of 17 was set at 5.0 kc. Eight oscillators were set at 2-cps

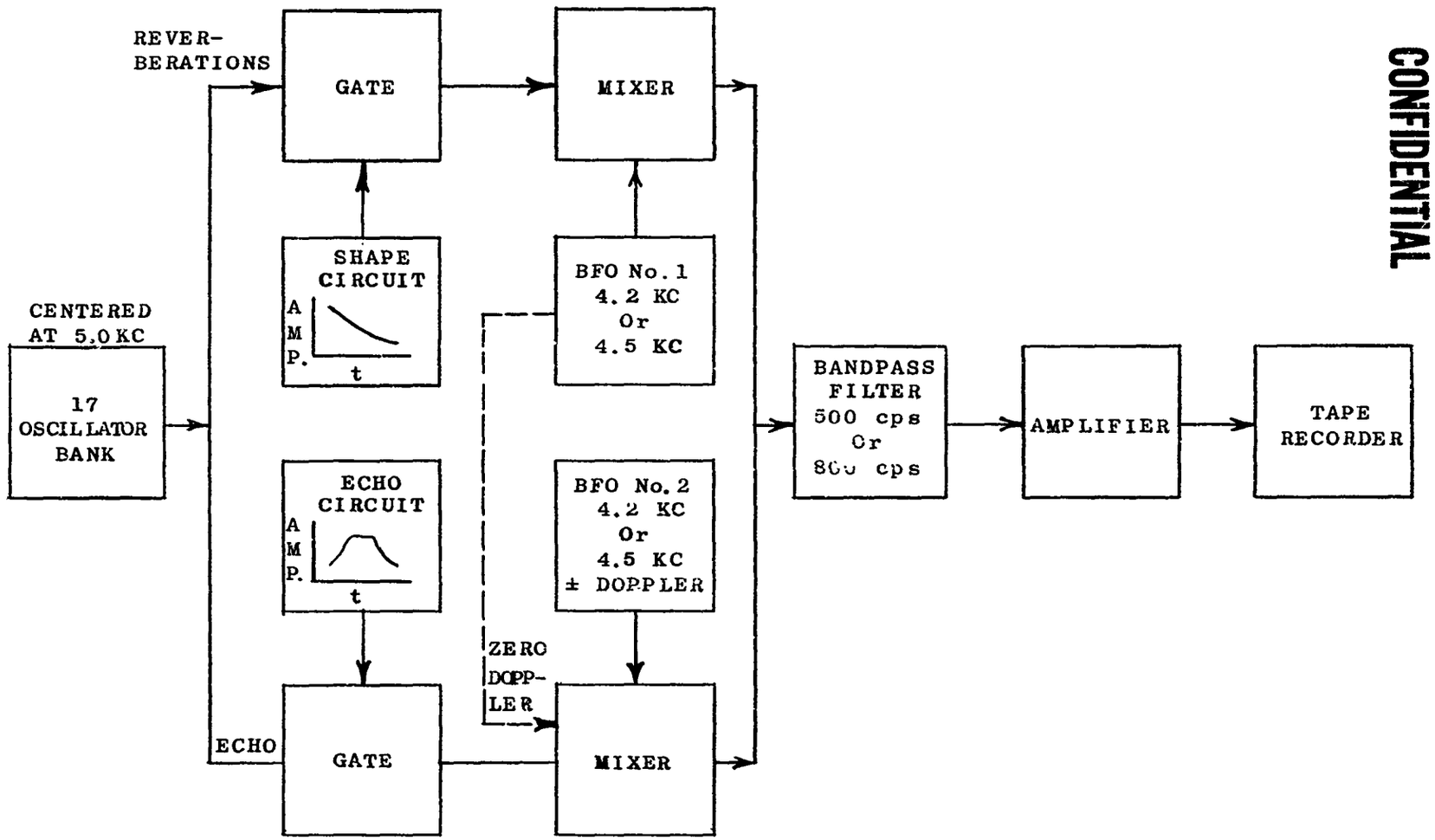

Figure 1. Block diagram of the equipment used to simulate reverberations and echoes at various display frequencies.

steps from 5002 to 5016 cps, and eight were set at 2-cps steps from 4998 to 4984 cps. For the half-speed condition the bandwidth was set at 16 cps in 1-cps steps, and for the double-speed condition it was set at 64 cps in 4-cps steps. For all speeds, the oscillator output was 1.0 volts across the entire bandwidth.

Reverberation and echo frequency. Two display frequencies were employed: 800 cps and 500 cps. The former is typically used in U. S. Navy sonar systems; the latter was hypothesized to be superior.

To obtain a reverberation frequency centered at 800 cps, beat frequency oscillator No. 1 (BFO No. 1) was set at 4.2 kc and its output was mixed with that of the oscillator bank which was centered at 5.0 kc. This produced a resultant pure frequency at 4.2 kc, and bands of frequencies centered at 5.0 kc, 9.2 kc, and the desired 0.8 kc. These in turn were applied to an 800-cps bandpass filter and reverberations of the desired bandwidth and frequency were the result. The same procedure was followed for the 500-cps display frequency, except that BFO No. 1 was set at 4.5 kc, and a 500-cps bandpass filter was used.

To obtain a dopplered echo appropriate for reverberations centered at 800 cps, BFO No. 2 was set either slightly above or slightly below 4.2 kc, depending on the amount of doppler required. (BFO No. 1 was used when zero doppler was required.) The output of BFO No. 2 was mixed with that of the oscillator bank and applied to an 800-cps bandpass filter. The same procedure was followed to obtain a dopplered echo appropriate for reverberations centered at 500 cps, except BFO No. 2 was set either slightly above or slightly below 4.5 kc, and a 500-cps bandpass filter was used.

Echo amplitude, duration and amount of doppler. The peak amplitude of all echoes was 2.0 volts. This value was selected to insure that the echoes would be detected easily.

Table I shows the amounts of doppler and the echo durations for each speed condition. One item, consisting of reverberations and echo, was developed for each cell in the table. For example, for the half-speed condition, one echo of 80-ms duration was produced having +2.5 cycles of doppler and another was produced having -2.5 cycles of doppler.

The doppler values under the standard-speed condition represented a reasonable range of difficulty in doppler recognition based on earlier test results (Harabedian & Parker, 1961) and subjective evaluations by project personnel. The echo durations included the longest and shortest values to be expected from submarine targets when the sonar is transmitting a 30-ms pulse.

All echo envelopes were symmetrical, the onset and offset portions being linear between zero and peak amplitude. For a given echo, the onset and offset durations were equal, and within a given speed the duration of each was equal to one-half the duration of the shortest echo. Therefore, the shortest echo within each speed condition was diamond shaped (see Figure 2). Longer echoes within a speed were generated by holding the onset and offset durations and the peak amplitude constant and then producing the remainder of the echo with the signal at peak amplitude.

Reverberation duration and amplitude. The initial intensity of the reverberations for all three speeds was 3.0 volts, with an exponential decay to a value of 0.2 volts, at which point the echo was inserted. The reverberation duration was 3.0 seconds for the standard-speed condition, 6.0 seconds for the half-speed condition, and 1.5 seconds for the double-speed condition. For the standard-speed condition the echo was inserted 2.5 seconds after the onset of the reverberations; for the half-speed condition it was inserted after 5.0 seconds and for the double-speed condition it was inserted after 1.25 seconds.

Table I

Echo durations and amounts of doppler of test items for each speed condition. Duplicate tests were constructed at display frequencies of 500 cps and 800 cps.

HALF-SPEED

		Doppler (± cps)					
		0.0	2.5	5.0	7.5	10.0	12.5
Echo Duration (ms)	80						
	120						
	160						
	200						
	280						
	360						
	440						

STANDARD SPEED

		Doppler (± cps)					
		0	5	10	15	20	25
Echo Duration (ms)	40						
	60						
	80						
	100						
	140						
	180						
	220						

DOUBLE-SPEED

		Doppler (± cps)					
		0	10	20	30	40	50
Echo Duration (ms)	20						
	30						
	40						
	50						
	70						
	90						
	110						

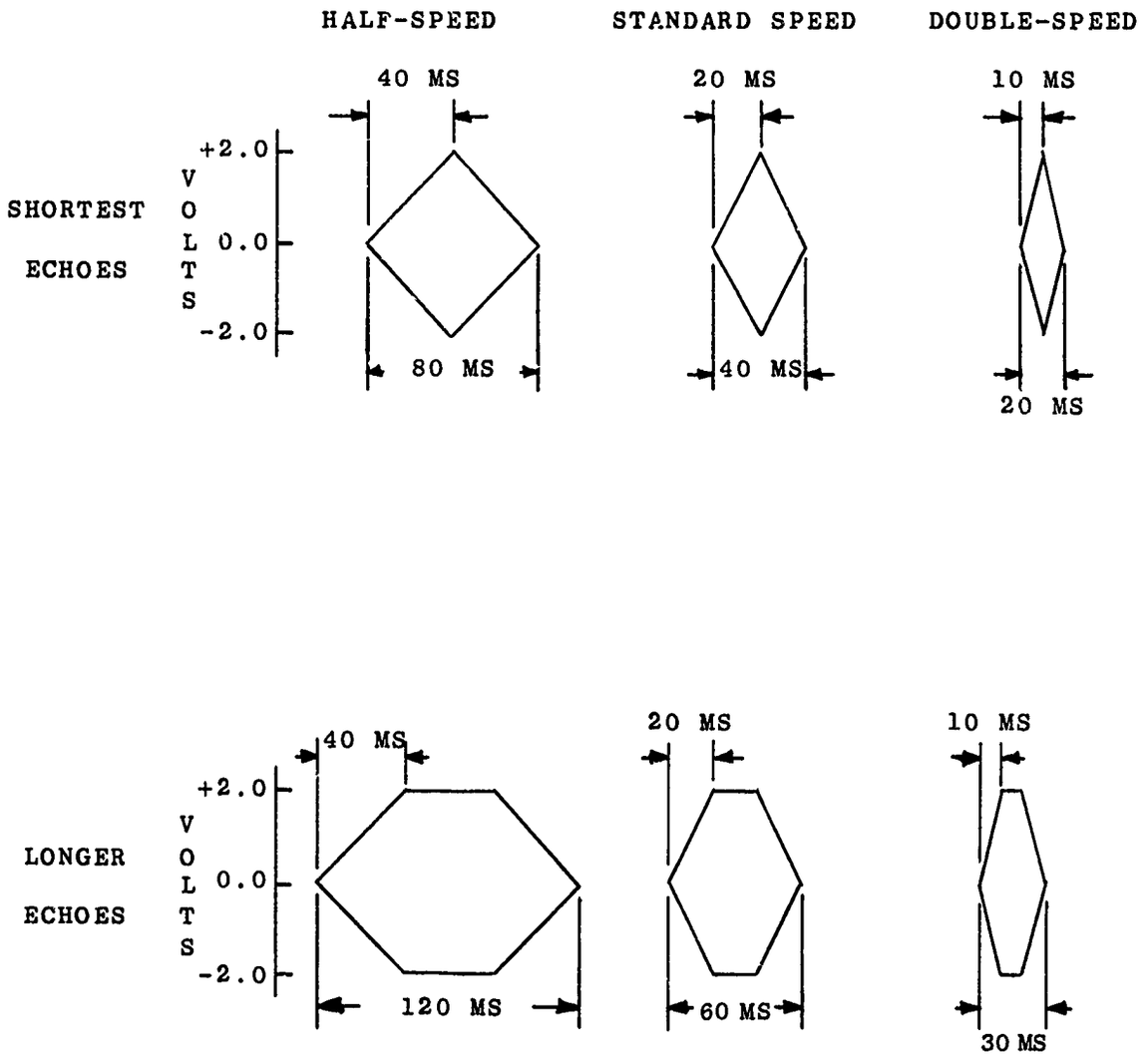

Figure 2. The figure shows the characteristics of the shortest echo within each speed condition and an example of a longer echo. Note that the duration of onset and offset remains the same for the echoes within a speed but changes by a factor of two across speeds.

Test Construction

Each item in the test was recorded on 1/4" magnetic tape and consisted of a 3-second voice slate announcing the item number, two identical returns (reverberations and echoes) with 1 second between returns, and a 1-second interval between the end of an item and the beginning of the next voice slate.

Two 231-item tests were constructed, one at a display frequency of 500 cps and another at 800 cps. Each test consisted of 77 items at each of three speeds (7 echo durations x 11 doppler values). The test items were assembled in a random order.

A training tape of 30 items, comprised of several combinations of amounts of doppler and echo duration, was also generated at each display frequency.

Test Administration

The subjects were given a 15-minute introduction on the general nature of active scanning sonar, the characteristics of reverberations and echoes, and the importance of doppler recognition for target classification.

After this introduction the 30 training items were presented to each group of subjects. These items were used to familiarize them with the task and to provide some doppler recognition training. The subjects were instructed to respond to every item on the test even if they were not sure of the answer. They responded by marking a "U" (up doppler) or a "D" (down doppler) on their answer sheets.*

The test was administered in two parts with a 10-minute rest between parts. Total testing time was approximately one hour.

A two-channel Ampex 600 Series tape recorder, a Harmone-Kardon

*Responses of "no doppler" were not permitted because they would have unnecessarily complicated the data analysis and were not necessary to test the principal hypotheses.

A-300 amplifier, and two University Model 308 speakers were used to present the taped signals to the subjects.

Subjects

The subjects were 100 Navy enlisted men attending the Radioman's "A" School of the U. S. N. Service School Command, San Diego. Sonar Pitch Memory Test scores were available for 50 of these men. On the basis of these scores, half were assigned to a group that received the test with the 500-cps display condition and the other half to a group receiving the 800-cps condition. The purpose of this assignment was to equate, as much as possible, pitch discrimination ability of the groups serving under the two conditions. The remaining 50 subjects (those without scores) were assigned randomly to the two groups.

IV. RESULTS

Display Frequency and Accuracy of Doppler Recognition

Twenty-one scores were calculated for each subject. The scores were the number of items correctly perceived at each of seven echo durations and at each of three speeds. The maximum number correct at each speed was 70 (7 durations x 10 doppler performances). Responses to the zero doppler items were omitted from the analysis for the reasons previously cited.

Preliminary analyses showed that at each speed the differences in accuracy between the 500 and the 800-cps display frequencies were essentially the same at all echo durations, i.e., there was no significant interaction between display frequency and echo duration. Consequently, echo duration was disregarded in this part of the analysis.

Table II shows the means and standard deviations of the number of correct responses for each speed at the two display frequencies.

Table II

Means and standard deviations of the number of correct responses for each speed at the two display frequencies

Speed		Display Frequency	
		500 cps	800 cps
Half	M	48.1	46.9
	σ	8.0	7.1
Standard	M	54.6	52.8
	σ	6.8	6.6
Double	M	57.8	55.9
	σ	6.8	6.6

As can be seen, performance was systematically better with the 500-cps display condition, but the difference between means at

each speed failed to reach statistical significance ($t < 1.40$ at each speed, $P < .20$).

Speed Translation and Accuracy of Doppler Recognition

Because there was no significant interaction between display frequency and echo duration, and because the differences between display frequencies were not statistically significant, display frequency was disregarded as a variable in the analyses of the effect of speed translation on doppler recognition accuracy.

Figure 3 shows the percentage of correct doppler recognitions at each of seven echo durations for each of the three speeds.

An analysis of variance (Table III) showed that the effects of echo duration, speed, and the interaction between the two were statistically significant ($P < .001$). Because the interaction was complex, additional analyses of variance were performed to determine the echo durations at which speed translation produced significant differences in accuracy.

Table III

Analysis of variance of the number of correct doppler judgments

Source	df	MS	F
Between Subjects (Ss)	99	17.41	
Within Subjects (Ss)	2000		
Speed (A)	2	322.50	169.74***
Echo Duration (B)	6	15.50	10.69***
A x B	12	13.25	8.83***
A x Ss	198	1.90	
B x Ss	594	1.45	
A x B x Ss	1188	1.50	

***$P < .001$

CONFIDENTIAL

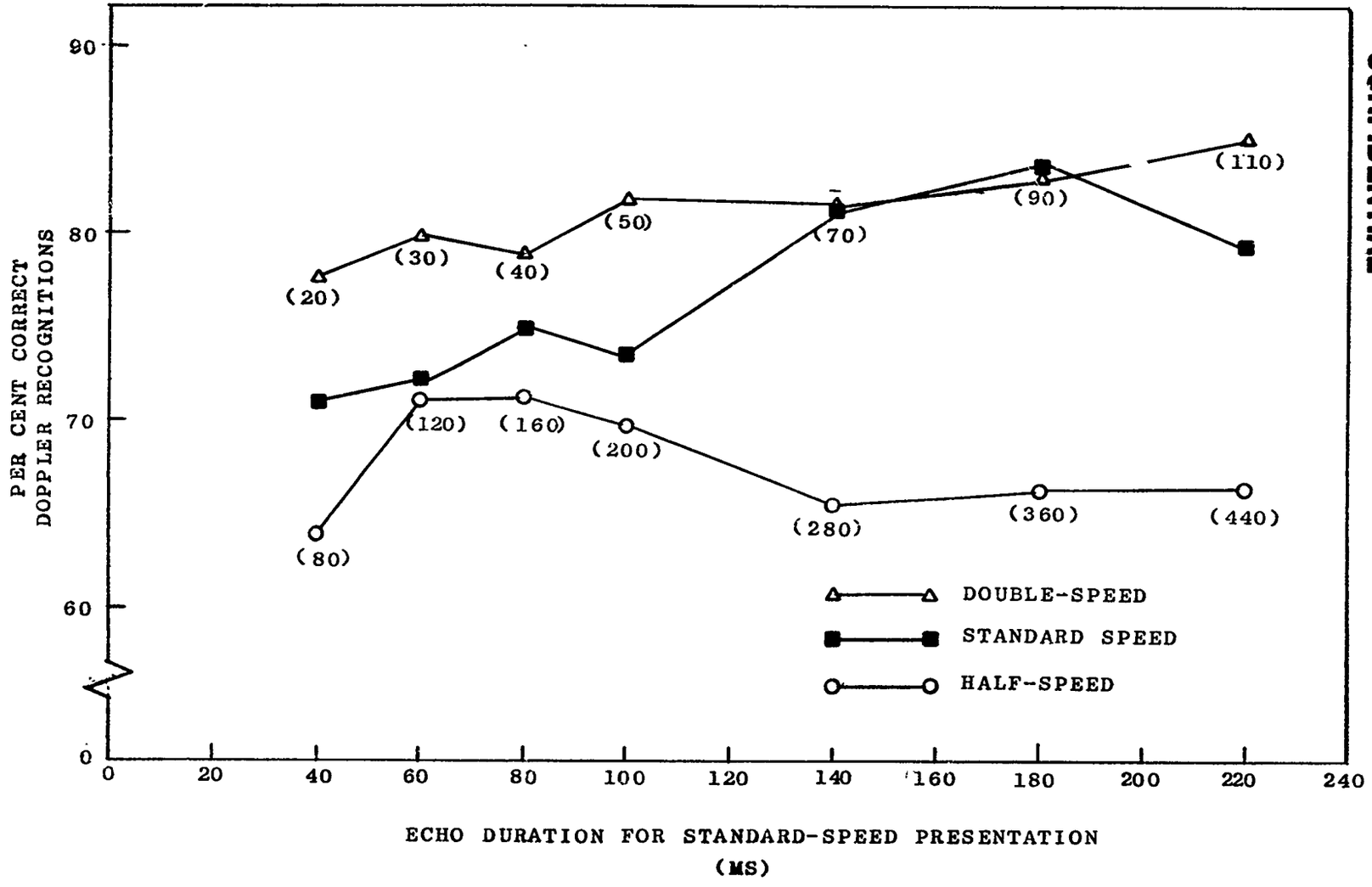

Figure 3. Doppler recognition accuracy for each of 7 echo durations and 3 speed conditions. The echo durations for the double- and half-speed conditions corresponding to a given standard-speed duration are given in parentheses below each data point.

CONFIDENTIAL

The results showed that at the four shortest echo durations (40 ms - 100 ms on the abscissa in Figure 3), performance was better under the double-speed condition than under the standard-speed condition. An analysis of variance revealed a significant difference between the mean number of correct responses at these two speeds ($F = 46.32$, $P < .001$). At the same four durations, mean performance under the half-speed condition was significantly inferior to that under the standard-speed condition ($F = 14.21$, $P < .001$). In addition, it is apparent from Figure 3 that at the three longest echo durations (140 ms - 220 ms), performance under the half-speed condition was inferior to that under either the standard-speed or double-speed condition. Finally, at 220 ms, mean performance again was significantly better under the double-speed than under the standard-speed condition ($t = 2.97$, $df = 98$, $P < .01$).

Earlier studies using pure tones have shown that pitch discrimination improves when the duration of the tone being judged is increased from 10 to about 400 ms, and then stabilizes beyond 400 or 500 ms. But the results of the present research, involving more complex tones, do not completely support the results of pure tone studies. Although the accuracy of doppler recognition increased from 20 to 100 ms under the double-speed condition ($F = 6.29$, $df = 6$ and 594, $P < .001$), and from 40 to 180 ms under the standard-speed condition ($F = 24.17$, $df = 6$ and 594, $P < .001$), accuracy decreased significantly when the echo was longer than 180 ms under the standard-speed condition ($t = 2.33$, $df = 98$, $P < .02$). In addition, under half-speed condition accuracy increased from 80 to 120 ms ($q_r^* = 5.5$, $P < .01$) but decreased for durations from 160 to 280 ms ($q_r = 4.3$, $P < .05$).

In summary, the results showed that the accuracy of doppler recognition increased as the echo durations increased from 20 to approximately 180 ms, but decreased when the echo was extended to durations greater than about 180 ms.

*The q_r is used to test the significant of the differences among means following a significant overall F. (See Weiner, 1962, p. 80.)

V. CONCLUSIONS AND DISCUSSION*

The results of this study suggested that a display frequency of 500 cps is better than one of 800 cps for making doppler judgments, although the difference in performance under the two conditions failed to meet traditional statistical criteria. The fact that the results were in agreement with previous findings (Gales, 1963; Harabedian & Mackie, 1963; Shower & Biddulf, 1939) would seem to strengthen the argument. Statistical significance might have been obtained had a "within subject" design been used instead of a "between subjects" design. The earlier studies used the former design and it may be that the small performance differences produced by relatively small differences in display frequency demand the more sensitive design if significance is to be demonstrated.

In any case, the previous and present results do imply that a display frequency of 500 cps is as good or better than one of 800 cps for judging doppler. Considering all of the available evidence, it would seem reasonable to employ a display frequency of 500 cps instead of the 800 cps currently used for shipboard active scanning sonars.

Doubling the playback speed of recorded sonar returns in conjunction with heterodyning back to the original display frequency increased the accuracy of doppler recognition at all but two of the seven echo durations studied. At those two durations (140 and 180 ms) accuracy was equivalent under the double-speed and standard-speed conditions. Double-speeding appears to have beneficial effects for the vast majority of echoes whose lengths are typical of those produced by submarines. For somewhat longer echoes the benefits are less clear, but in no case do there appear to be adverse effects.

*To simplify the exposition, no further reference is made in this section to the fact that the sonar returns and speed translation were simulated. Of course, the validity of the conclusions depends upon the adequacy of the simulation.

Halving the playback speed reduced the accuracy of doppler recognition at all seven echo durations. Under this condition, the adverse effect of halving the amount of doppler was greater than the beneficial effect of doubling the durations of the echoes.

It is concluded that doubling the playback speed of recorded sonar returns will improve doppler recognition at all but the longest echo durations. For double-speeding to be a useful technique, the resultant frequency must be heterodyned to the original display frequency or to some frequency at which doppler recognition is at least as good as it would be at the original display frequency. Halving the playback speed should not be attempted, with or without heterodyning.

These results do not preclude the possibility that playback speeds faster than double-speed may further improve doppler recognition; in fact, an extrapolation of these results suggests such a possibility. At some point, however, the beneficial effects of speeding will be exceeded by the loss in tonality due to shortening the duration of the echo. The data suggest, for example, that quadruple-speeding of echoes of lengths between 80 and 220 ms might be beneficial, but only a minority of submarine echoes fall within these limits. Further, the ones for which doppler discrimination is most difficult do <u>not</u> fall within this range.

A rather surprising finding was the decrease in doppler recognition accuracy at echo durations beyond approximately 180 ms. Under the standard-speed condition, doppler recognition was less accurate at 220 ms than at 180 ms and, under the half-speed condition, it was less accurate at durations of 280, 360, and 440 ms than at 120 and 160 ms.

This result is not in agreement with those of studies using pure tones as stimuli. Stevens and Davis (1947, p. 102) found that pitch discrimination improves when the duration of the tones being compared is increased up to about 370 ms. There is no evidence suggesting that discrimination should deteriorate when

the tones are longer than 180 ms.

A possible reason for this difference in findings is that the echoes judged in the present study were comprised of bands of frequencies, rather than a single frequency. With bands of frequencies similar to those found in sonar returns, the amplitudes of the sound waves of different frequencies summate and cancel as they go in and out of phase, and the listener hears loudness variations within the echo. When the echo is "short" these variations are not apparent and the echo sounds coherent; when the echo is "long" (longer than 180 ms) the loudness variations become so apparent that they may hamper doppler recognition. While the foregoing argument is speculative, project personnel who listened to the echoes found that the loudness variations in the "longer" echoes were much more apparent than those in the "shorter" echoes.

REFERENCES

Gales, R. S. Auditory presentation of information. In C. T. Morgan, J. S. Cook, A. Chapanis, & M. W. Lund (Eds.), Human engineering guide to equipment design. New York: McGraw-Hill, 1963, Ch. 3.

Harabedian, A. & Mackie, R. R. Studies of doppler recognition using the SQS-23 sonar (U). Human Factors in Anti-Submarine Warfare tech. Rep., 1963, No. 206-23. Human Factors Research, Inc., Santa Barbara, Contract Nonr 2649(00), CONFIDENTIAL.

Harabedian, A. & Parker, E. L. Three studies of sonar doppler discrimination: RDT versus omnidirectional transmission; effects of speed translation; use of the NRL doppler discriminator. Human Factors in Anti-Submarine Warfare tech. Rep., 1961, No. 12, Human Factors Research, Inc., Los Angeles, Contract Nonr 1106(00), CONFIDENTIAL.

Mackie, R. R., Gavin, R. A. & Parker, E. L. Target classification using active scanning sonars. Human Factors in Anti-Submarine Warfare tech. Rep., 1959, No. 206-0. Human Factors Research, Inc., Los Angeles, Contract Nonr 2649(00), CONFIDENTIAL.

Shower, E. G. & Biddulf, R. Differential pitch sensitivity of the ear. J. acoust. Soc. Am., 1931, 3, 275-287.

Stevens, S. S. & Davis, H. Hearing, its psychology and physiology. New York: Wiley and Sons, 1947.

Weiner, B. J. Statistical principles in experimental design. New York: McGraw-Hill, 1962.