UNCLASSIFIED

AD NUMBER	
AD309418	
CLASSIFICATION CHANGES	
TO:	**UNCLASSIFIED**
FROM:	**CONFIDENTIAL**
LIMITATION CHANGES	
TO: **Approved for public release; distribution is unlimited.**	
FROM: **Distribution authorized to U.S. Gov't. agencies and their contractors; Administrative/Operational Use; JUL 1959. Other requests shall be referred to Development and Proof Services, Aberdeen Proving Ground, MD.**	
AUTHORITY	
ARRADCOM ltr 26 Dec 1979 ; ARRADCOM ltr 26 Dec 1979	

THIS PAGE IS UNCLASSIFIED

UNCLASSIFIED

AD 309418

CLASSIFICATION CHANGED
TO: UNCLASSIFIED
FROM CONFIDENTIAL
AUTHORITY:
ARRADCOM 1 ltr
26 Dec 79

UNCLASSIFIED

THIS REPORT HAS BEEN DELIMITED
AND CLEARED FOR PUBLIC RELEASE
UNDER DOD DIRECTIVE 5200.20 AND
NO RESTRICTIONS ARE IMPOSED UPON
ITS USE AND DISCLOSURE.

DISTRIBUTION STATEMENT A

APPROVED FOR PUBLIC RELEASE;
DISTRIBUTION UNLIMITED.

AD 309418

Armed Services Technical Information Agency

ARLINGTON HALL STATION
ARLINGTON 12 VIRGINIA

FOR
MICRO-CARD
CONTROL ONLY

1 OF 1

NOTICE: WHEN GOVERNMENT OR OTHER DRAWINGS, SPECIFICATIONS OR OTHER DATA ARE USED FOR ANY PURPOSE OTHER THAN IN CONNECTION WITH A DEFINITELY RELATED GOVERNMENT PROCUREMENT OPERATION, THE U. S. GOVERNMENT THEREBY INCURS NO RESPONSIBILITY, NOR ANY OBLIGATION WHATSOEVER; AND THE FACT THAT THE GOVERNMENT MAY HAVE FORMULATED, FURNISHED, OR IN ANY WAY SUPPLIED THE SAID DRAWINGS, SPECIFICATIONS, OR OTHER DATA IS NOT TO BE REGARDED BY IMPLICATION OR OTHERWISE AS IN ANY MANNER LICENSING THE HOLDER OR ANY OTHER PERSON OR CORPORATION, OR CONVEYING ANY RIGHTS OR PERMISSION TO MANUFACTURE, USE OR SELL ANY PATENTED INVENTION THAT MAY IN ANY WAY BE RELATED THERETO.

CONFIDENTIAL

[redacted] THIS DOCUMENT CONSISTS OF 51 PAGES.
COPY 23 OF 41 COPIES.

Development and Proof Services

REFERENCE COPY

Report No. DPS/TB3-1224/23

AD No. 70194
ASTIA FILE COPY

AUTOMOTIVE DIVISION

FILE COPY

REPORT ON

PERFORMANCE OF SPACED ARMOR WHEN ATTACKED BY THE M344 HEAT PROJECTILE (U)

FC

Twenty-Third Report On Ordnance Project TB3-1224

(D. A. Project No. 503-04-004)
(AD 1272)

ASTIA
RECEIVED
JUL 31 1959
TIPDR

S. M. KEITHLEY

JULY 1959

RETAIN OR DESTROY PER AR 380-5 AND
AR 345-215 OR COMPARABLE AF OR NAVY
REGULATIONS. DO NOT RETURN

Aberdeen Proving Ground
Maryland

[redacted]

This document is the property of the United States Government. It is furnished for the duration of the contract and shall be returned when no longer required, or upon recall by ASTIA to the following address:
Armed Services Technical Information Agency, Arlington Hall Station, Arlington 12, Virginia

NOTICE: THIS DOCUMENT CONTAINS INFORMATION AFFECTING THE NATIONAL DEFENSE OF THE UNITED STATES WITHIN THE MEANING OF THE ESPIONAGE LAWS, TITLE 18, U.S.C., SECTIONS 793 and 794. THE TRANSMISSION OR THE REVELATION OF ITS CONTENTS IN ANY MANNER TO AN UNAUTHORIZED PERSON IS PROHIBITED BY LAW.

CONFIDENTIAL

DEVELOPMENT AND PROOF SERVICES
ABERDEEN PROVING GROUND
MARYLAND

AUTHORITY: BRL Ltr, dated 30 July 1957 SMKeithley/ncj/28264
PRIORITY : 1A

PERFORMANCE OF SPACED ARMOR WHEN ATTACKED BY THE M344 HEAT PROJECTILE (U)

Twenty-Third Report on Ordnance Project TB3-1224

(AD 1272)

Dates of Test: 1 September 1957 to 15 March 1959

ABSTRACT (C)

Spaced armor has sometimes been known to exhibit marked superiority in resistance to penetration over a solid target of equivalent weight. A simple spaced-armor arrangement, consisting of a single plate spaced at various distances from, and parallel to, a much thicker main armor, was tested against statically and dynamically fired 106-mm, M344, HEAT projectiles at several obliquities. Results indicate a reduction in total steel penetration due to spaced armor, with the reduction increasing as the spacing increases.

CONFIDENTIAL

CONTENTS

	PAGE
INTRODUCTION	3
DESCRIPTION OF MATERIEL	3
DETAILS OF TEST	4
Procedure and Results	4
Static Detonation Phase	5
Dynamic Firing Phase	9
Special Static Detonation Phase	14
Summary and Analysis	15
Observations	18
CONCLUSIONS	20
REFERENCES	21
APPENDIX A: CORRESPONDENCE	A-1
APPENDIX B: DISTRIBUTION	B-1
ANNEX	
APG FIRING RECORD AR-21659	
ANALYTICAL LABORATORY REPORT 59-AL-20	
ROUND-BY-ROUND DATA	

(The Annex is on file in the Technical Library, APG for reference purposes. Copies of the Annex may be furnished to recipients of this report upon request.)

1. (C) INTRODUCTION

It has been known for many years that arrangements of armor containing one or more air spaces sometimes exhibit marked superiority in resistance to penetration over a solid target of equivalent weight. This feature has not, however, led to the widespread use of such armor, not only because of design problems, but because penetration data have not consistently displayed a worthwhile improvement in protection. Recent tests have shown that spaced armors effectively defeat HEP projectiles and considerably degrade the penetration of certain types of kinetic-energy projectiles, especially those employing tungsten-carbide penetrators.

Spaced armor has also been proposed as a defense against HEAT ammunition. Several agencies have reported test results and the conclusions reached therefrom have differed. Some publications (References 1 and 2) have indicated that spaced armors are of little value, and under certain conditions perhaps give worse performance than conventional armor. Others (References 3 and 4) have found spaced armor to be quite effective in reducing shaped-charge penetrations. Reference 6 shows that spacing alone will decrease significantly the penetrating ability of the M344. The lack of agreement in the conclusions seems to indicate that the basic factors responsible for the observed performance of spaced armor are not completely understood.

The tests reported here were designed to study the significant factors associated with dynamic versus static firings, and the effect of plate spacing and armor obliquity on depth of penetration of the M344, HEAT projectiles.

2. (C) DESCRIPTION OF MATERIEL

All skirting plates used during the test were flame-cut to 12 by 18 inches from larger pieces of 1/2-inch, SAE 1020, mild steel, with a hardness of approximately 125 Bhn.

The main armor was made up by stacking and banding a sufficient number of 4- by 3-foot by 1/2-inch, SAE 1020, mild steel plates with a hardness of approximately 125 Bhn.

The 106-mm, HEAT, M344 projectile was used throughout the test. Two lots of projectiles, MA4-4 and MA4-9, were used. Complete rounds, loaded with service-velocity charges, were used for the dynamic phase of the test. The cartridge case and propellant were removed from the rounds that were to be statically detonated. They were statically detonated using a pressed tetryl booster and an electric blasting cap.

In addition to the modification necessary for static detonation, 40 rounds received additional modification in that the ogive of the projectile was sawed off just ahead of the cone base (Figure 1).

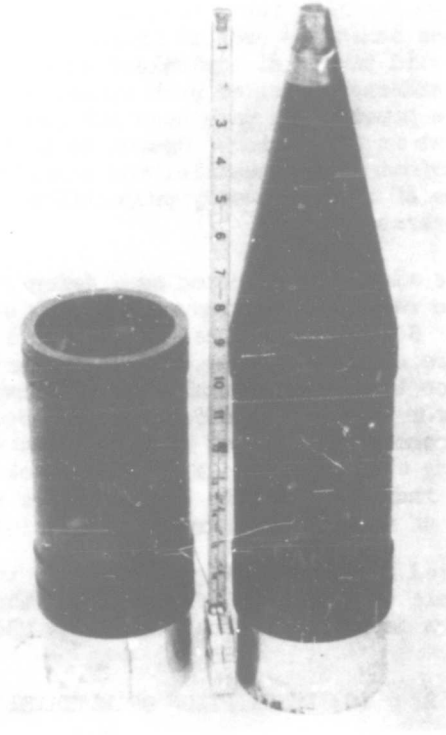

Figure 1 - B29956: Modified Shell (Left) Shown with Unmodified Shell.

3. (C) DETAILS OF TEST

3.1 Procedure and Results

The testing program was divided into static detonation, dynamic firing, and special static detonation phases.

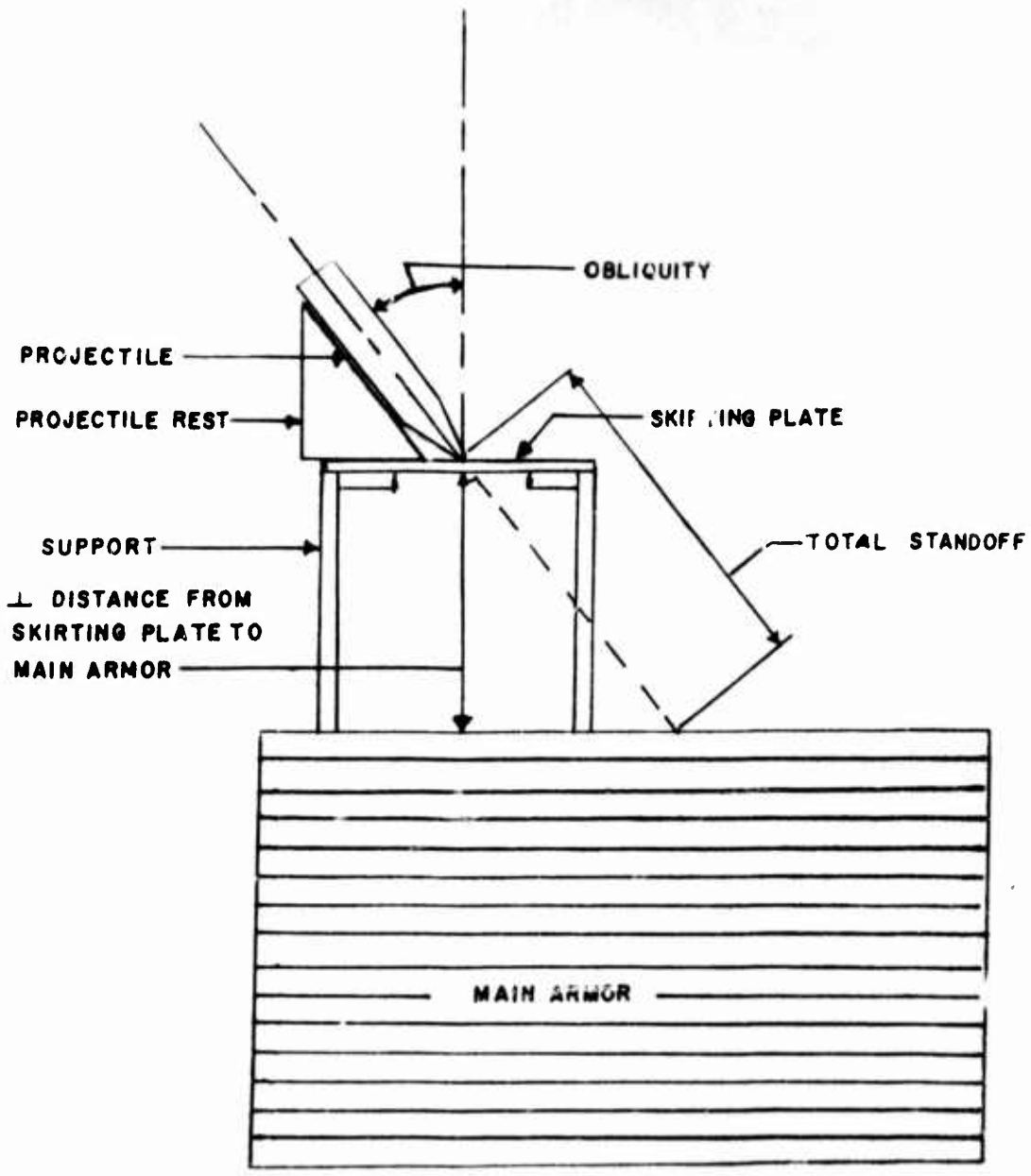

Figure 2: Test Setup Used for Static Detonation Phase.

3.1.1 Static Detonation Phase. The spaced-armor arrangements investigated during this phase consisted of a single 1/2-inch mild steel skirting plate supported parallel to and some distance away from a stack of 1/2-inch mild steel plates. The skirting plate was supported by a wooden separator (Fig. 2). The desired obliquity was obtained by placing the projectile on a wooden rest prefabricated to give the required obliquity. Tests were conducted at 0°, 45° and 60° obliquity. The resultant data are presented in two ways in Tables IA and IB.

Table IX. Total Line-of-Jet Penetrations (A + C) into Mild Steel Spaced Armor by Statically Detonated 106-mm, M344, HEAT Projectiles, Lot M4-4.

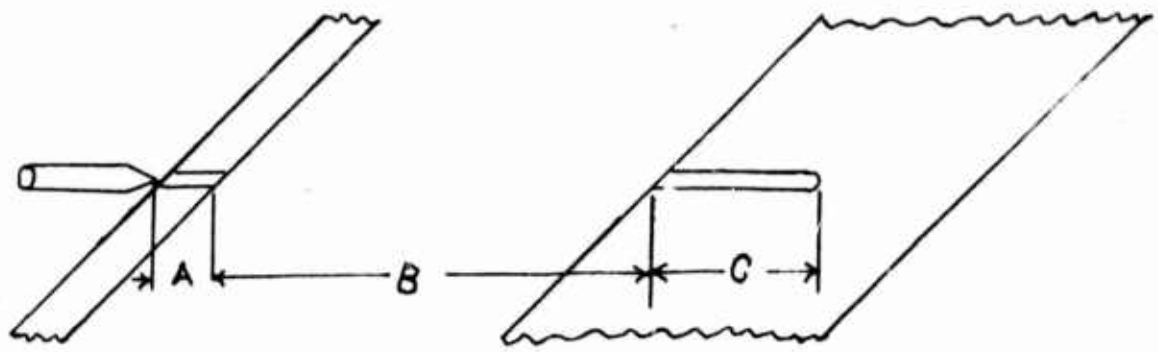

Distance B, inches	OBLIQUITY 0° [a]Mean, in.	0° Std Dev, in.	45° [a]Mean, in.	45° Std Dev, in.	60° [a]Mean, in.	60° Std Dev, in.	Over-all Average, inches
0	17.3	0.49	---	---	17.7	1.6	17.5
6	15.0	1.04	---	---	---	---	15.0
12	12.8	2.08	14.3	1.12	12.5	2.92	13.20
24	9.9	2.60	---	---	8.5	1.02	9.2
48	---	---	---	---	5.8	1.77	5.8

[a]10-round groups.

Table IB. Total Perpendicular Penetrations (X + Z) into Mild Steel Spaced Armor by Statically-Detonated 106-mm HEAT Projectiles, Lot MA4-4.

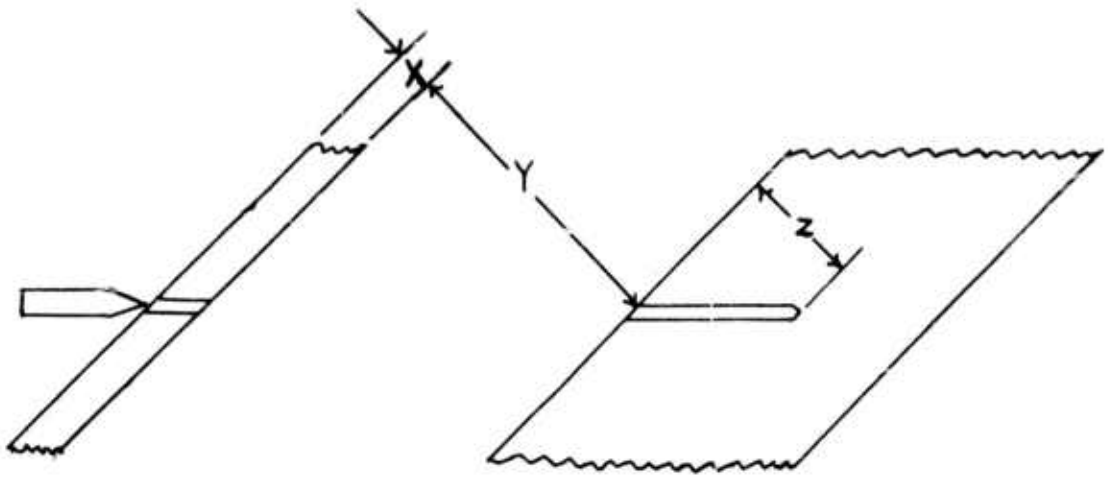

Distance Y, inches	OBLIQUITY 0° Mean, in.	0° Std Dev, in.	45° Mean, in.	45° Std Dev, in.	60° Mean, in.	60° Std Dev, in.
0	17.3	0.49	---	---	8.9	0.80
6	15.0	1.04	---	---	6.3	1.46
8.5	---	---	10.1	0.79	---	---
12	12.8	2.08	---	---	4.[illegible]	0.51
24	9.9	2.60	---	---	2.9	0.89

Comparisons of the penetration data for the same line-of-jet standoffs (12 inches and 24 inches) indicate no significant difference due to obliquity. Figure 3 is a plot of the same data versus standoff.

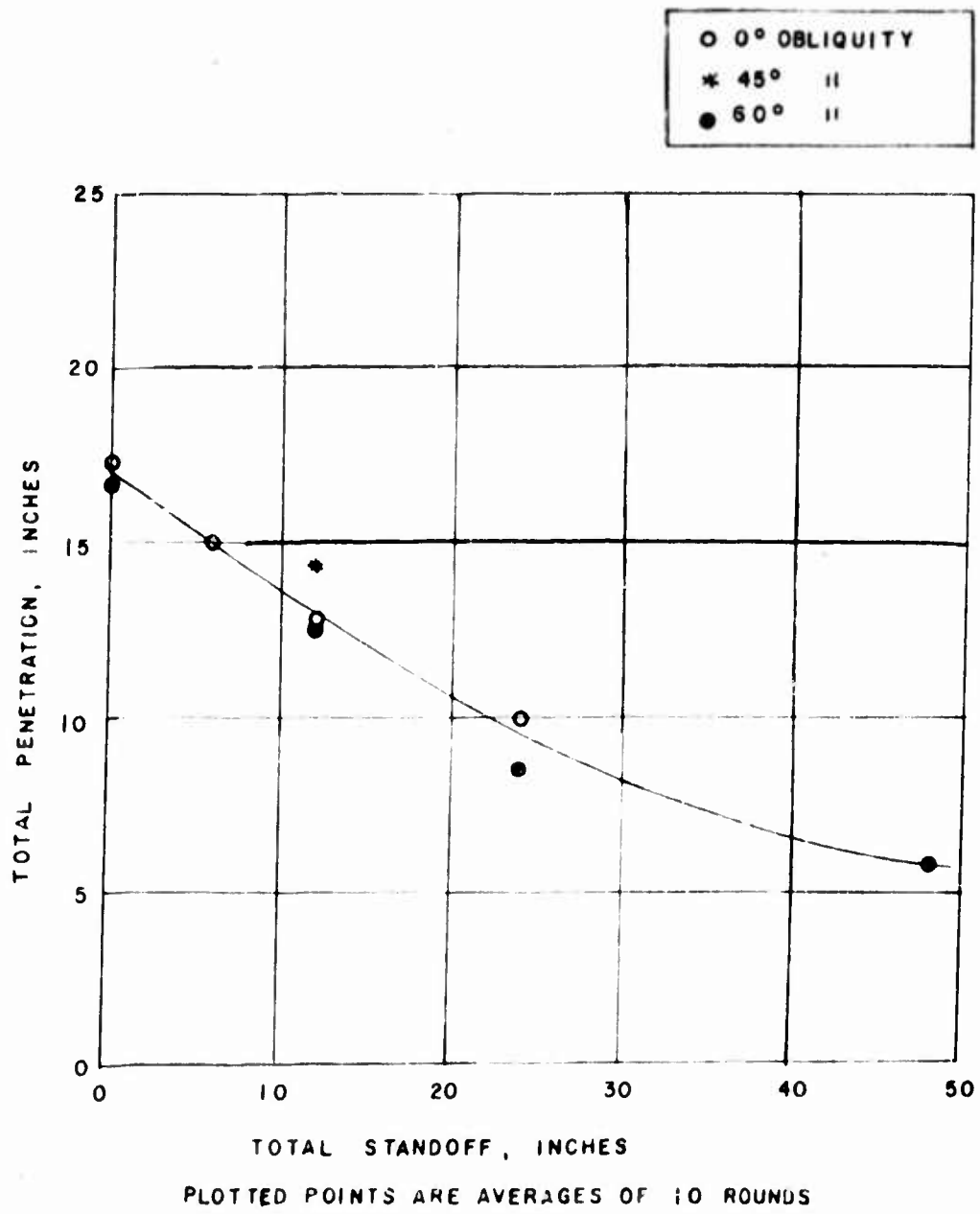

Figure 3. Penetration of Mild Steel by 106-MM M344 HEAT Projectile, Statically Detonated, at Various Obliquities and Amounts of Standoff

3.1.2 Dynamic Firing Phase. Standard plate butts were used to support the main armor at the desired angle of obliquity. A special steel plate-holder was fabricated to support the skirting plate and hold it rigidly at the desired angle of obliquity; however, it was rendered useless after only one round, so thereafter wooden stands were fabricated to hold the skirting plate at the required obliquity. It is believed that little, if any, skirting plate rigidity was sacrificed by using skirting plate supports made of wood rather than steel because of the extremely fast fuze action of the projectile and the inertia of the skirting plate. The recoilless rifle was positioned 150 feet from, and at normal azimuth to, the skirting plate, which was in front of, and parallel to, the main armor (Figure 4).

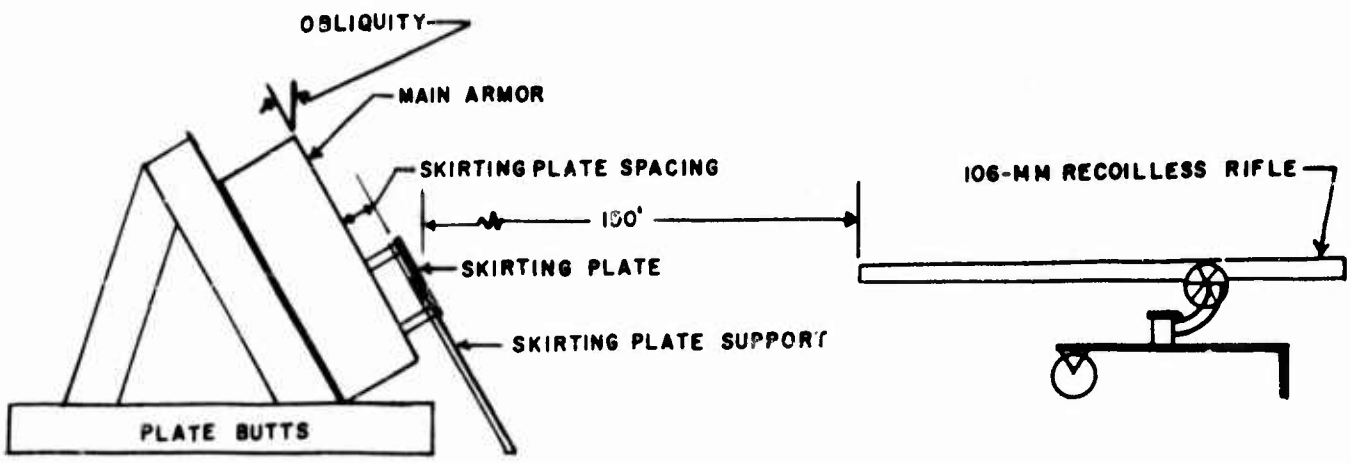

Figure 4: Test Setup Used for Dynamic Phase.

The average depth of penetration versus standoff for various obliquities along with their standard deviations are tabulated two ways in Tables IIA and IIB.

Table IIA. Total Line-of-Jet Penetrations (A + C) Into Mild Steel Spaced Armor by Dynamically Fired 106-mm M344 HEAT Projectile.

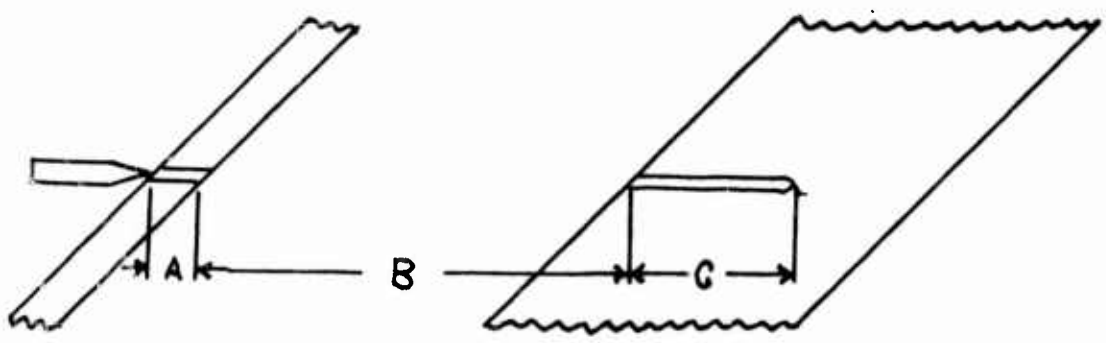

Distance B, inches	OBLIQUITY 0° Mean, in. [a]	0° Std Dev, in.	45° Mean, in. [a]	45° Std Dev, in.	60° Mean, in. [a]	60° Std Dev, in.	Over-all Average, inches
0	[b]20.1	0.56	18.7	0.59	20.5	1.91	19.77
6	[b]20.0	.78	---	---	---	---	20.0
12	[b]19.3	.86	16.0	2.20	17.2	2.38	17.50
17	[b]15.1	3.33	---	---	---	---	15.10
24	[b]15.1	1.34	13.3	1.79	12.8	3.52	13.73
48	---	---	---	---	8.5	1.47	8.50

[a] Ten-round groups.

[b] Projectile lot MA4-9; all others, lot MA4-4.

Table II B. Total Perpendicular Penetrations (X + Z) Into Mild Steel Spaced Armor by Dynamically Fired 106-mm, HEAT Projectiles.

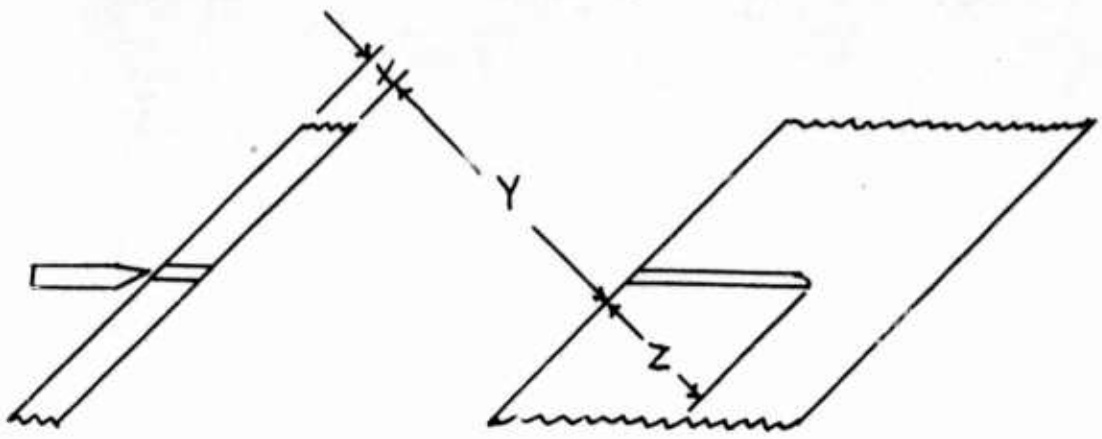

Distance Y, inches	OBLIQUITY 0° Mean, in.	0° Std Dev, in.	45° Mean, in.	45° Std Dev, in.	60° Mean, in.	60° Std Dev, in.
0	20.1	---	13.2	0.42	16.3	0.96
6	20.0	---	---	---	8.6	1.19
8.5	---	---	11.3	1.56	---	---
12	19.3	---	---	---	6.4	1.76
17	15.1	---	9.4	1.27	---	---
24	15.1	---	---	---	4.3	.74

High-speed motion pictures (16-mm Fastax) were taken of five rounds each impacting the skirting plate at 45 and 0 degrees obliquity. As can be seen from Figure 5 the projectile was photographed approximately 9 times per millisecond prior to impacting the skirting plate. No evidence of ogive collapse, skirting plate movement or collapse, or projectile skid was found after careful examination of all the high-speed motion pictures taken.

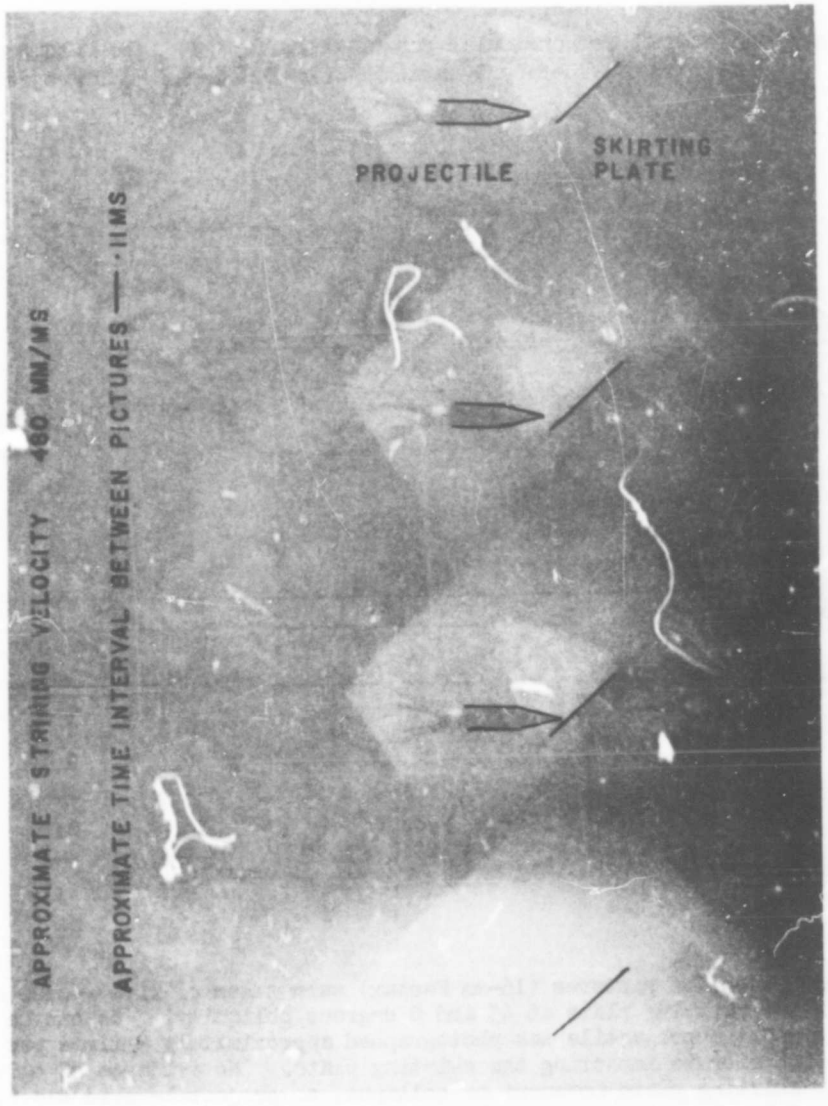

Figure 5 - 59T1493: 106-mm, M344, HEAT Projectile, Fired Dynamically, is Shown Prior to and After Impacting the Skirting Plate Set at 45° Obliquity. The Lower Picture Indicates that the Skirting Plate is Intact After the Projectile Fuze has Functioned. The Projectile is Shown to be Partially Intact on the Original Film; However, the Details were Obscured in this Reproduction. (The Front Sections of the Projectile and Skirting Plate are Outlined in Ink.)

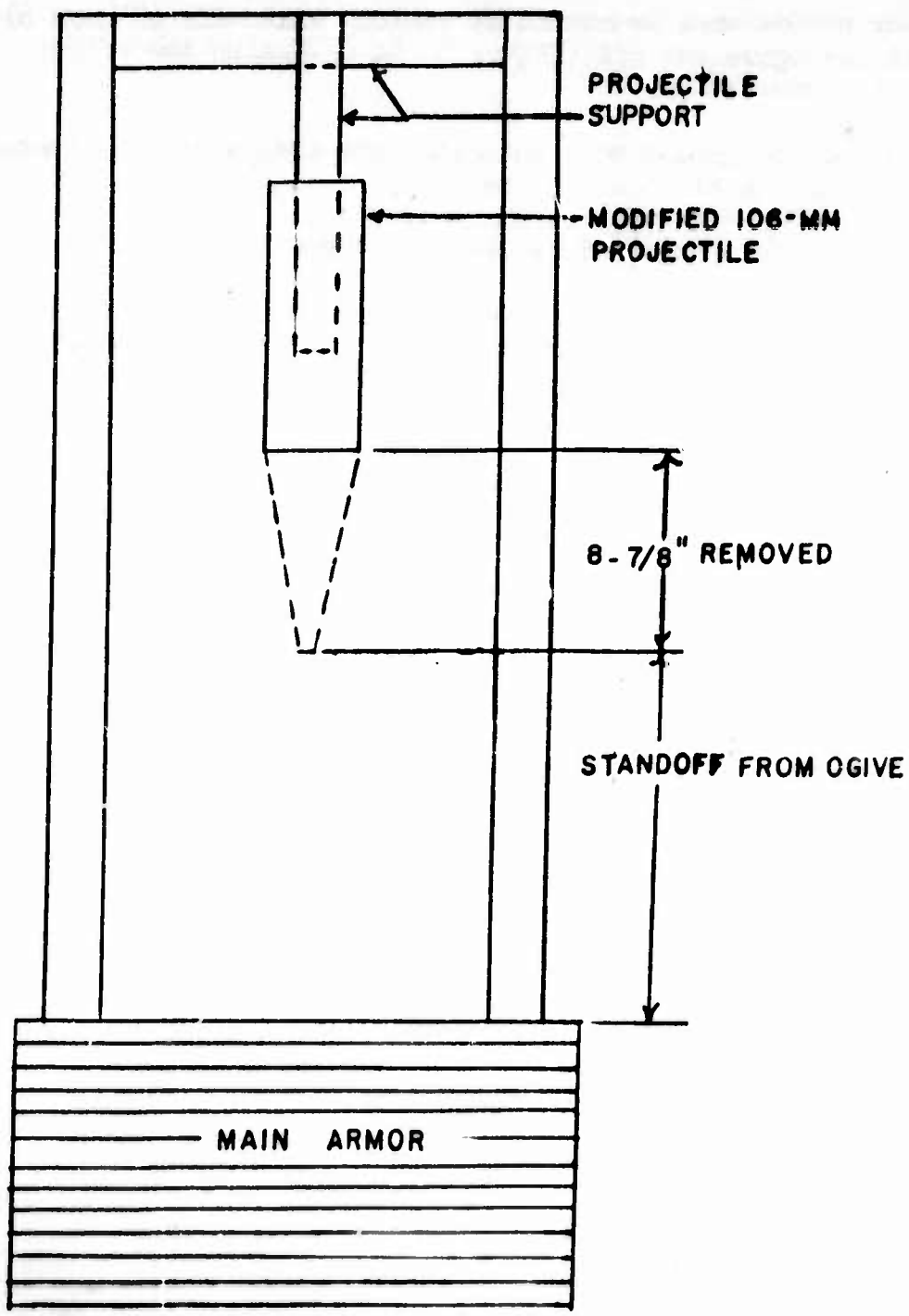

Figure 6: Test Setup Used During Special Static Detonation Phase.

3.1.3 Special Static Detonation Phase. Eight 10-round groups of 106-mm M344, HEAT projectiles were statically detonated at 0 degree obliquity to provide additional data for studying the effect of various factors on the depth of penetration.

Thirty rounds were detonated at various standoffs (Figure 6) with 8-7/8 inches of the ogive cut off (Figure 1) to determine the effect of the ogive on depth of penetration.

Two ten-round groups were detonated statically at 48.5 inches from the main armor. For one of these groups the projectile rested on a skirting plate (Figure 2); for the other group the projectile was detonated while suspended in the air 48.5 inches from the main armor (Figure 6).

Since two lots of projectiles were used during the previous firings, both lots were tested under two test conditions to provide a direct comparison and a basis for decision on the validity of combining data of the two lots in other comparisons.

The average depth of penetration versus standoff is shown in Table III. All projectiles were from lot MA4-4 unless otherwise indicated.

Table III. Depth of Penetration by Projectiles Detonated Statically at 0 Degree Obliquity.

Standoff from Ogive as Defined in Fig.6, inches	Modified Projectile with 8-7/8" of Ogive Removed		Unmodified Projectile With Ogive Intact	
	[a]Mean, in.	Std Dev, in.	[a]Mean, in.	Std Dev, in.
0	20.2	0.59	[b]17.8	1.08
12-1/2	---	---	12.4	2.35
			[b]13.1	2.14
13-1/8	19.8	1.01	---	---
25-1/8	15.6	2.83	---	---
48	---	---	[c] 7.1	1.79
48-1/2	---	---	7.3	3.00
49-1/8	10.7	2.92	---	---

[a]Ten-round groups.

[b]Projectile Lot No. MA 4-9.

[c]1/2-inch mild steel skirting plate used.

3.2 [a]Summary and Analysis

The results of the test provide data for studying the effect of various factors on the depth of penetration of the M344 Projectile. Taken up specifically in the paragraphs that follow are differences between two lots of projectiles, differences among various obliquities, comparison of static and dynamic firings, the effect of cutting off the ogive, and the effect of the armor skirt.

Under two conditions, projectile lots MA 4-4 and MA 4-9 were both tested.

At 0 degree obliquity and at a 12-1/2 inch standoff, Lot MA 4-9 (Table III) gave an average penetration of 13.1 inches and Lot MA 4-4 (Table III) under the same conditions gave an average penetration of 12.4 inches. The difference (.7 inches greater penetration for Lot MA 4-9), is about one-third the standard deviation of either sample group. At 0 degree obliquity and 0-inch standoff Lot MA 4-9 (Table III) gave an average penetration of 17.8 inches and Lot MA 4-4 (Table I) gave an average penetration of 17.3 inches - a difference of 0.5 inch.

Since these differences are small, and neither is statistically significant, the "true" difference (for static detonations, at least) is expected to be small. Consequently, data from the two lots were combined in the subsequent analyses.

The averages of Table IIA, and points plotted on Figure 7, suggest the existence of an effect of obliquity on the depth of penetration (i.e., penetration decreases with increasing obliquity). The suggested pattern, however, does not prevail throughout the data. Further, in view of the fact that the projectiles at zero obliquity were from a different lot, a difference between lots, even though small, would appear as an effect on obliquity and tend to distort or obscure a small obliquity effect. No consistent effect of obliquity was found.

A curve of penetration versus distance data between skirting plate and main armor was fitted to the averages (dynamic firings) in Table II. This curve is shown as a solid line in Figure 7. The analytical expression is $Y = 20.18 - .261x + .00026x^2$, where Y is the penetration and X is the standoff distance (both in inches), and $0 \leq x \leq 48$. (The simple expression $Y = 20.11 - .250X$ describes the data almost as well.)

A curve similarly derived from the results of static detonations is shown in Figure 7 as a broken line. The difference between these curves (from 3 to 5 inches) is a measure of the difference in depth of penetration between dynamic firings and static detonations.

[a]The statistical analysis of the data is based on Analytical Laboratory Report 59-AL-20, by Mr. J. S. Hagan.

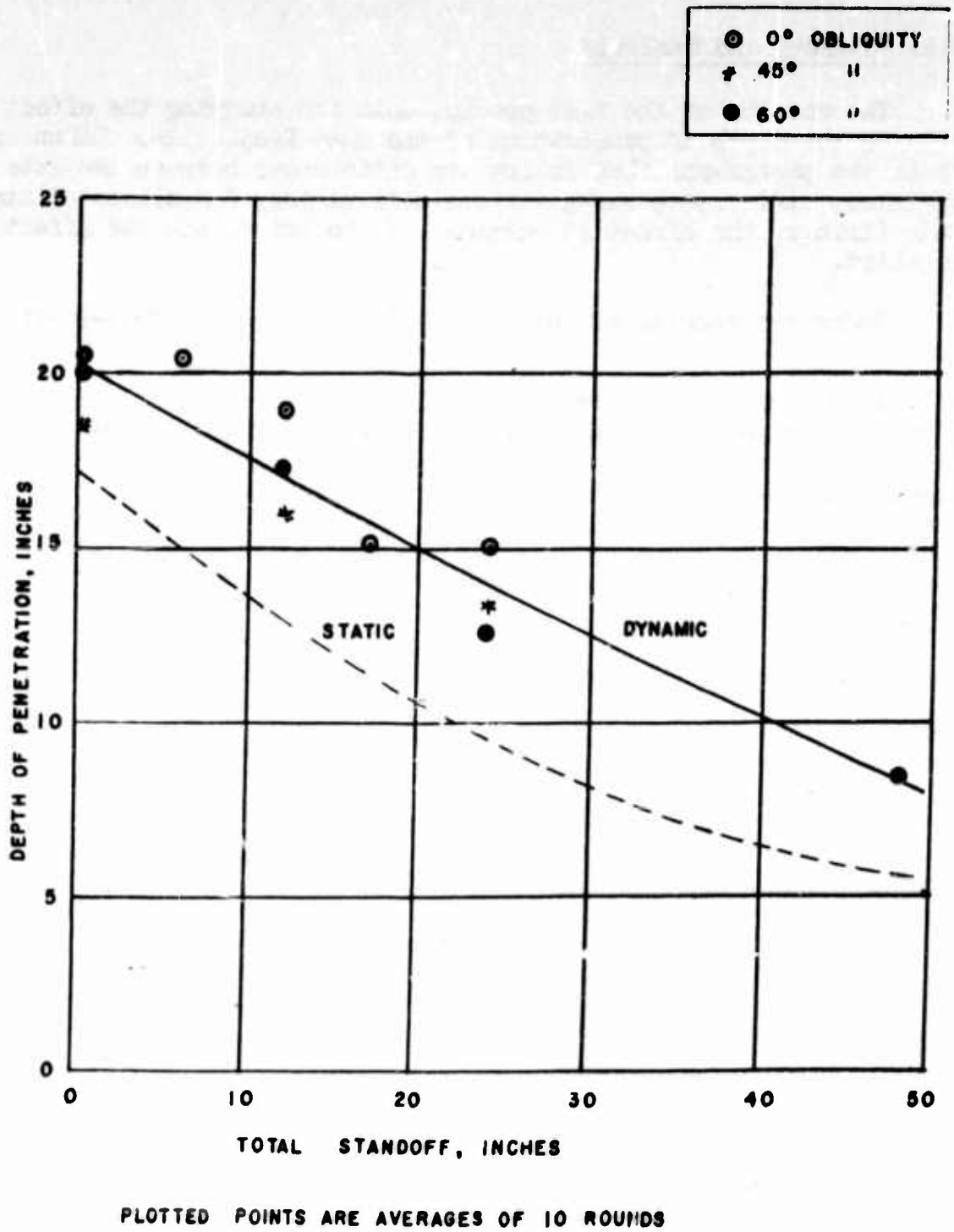

Figure 7. Penetration of Mild Steel by 106-MM M344 HEAT Projectiles Fired Dynamically at Various Obliquities and Amounts of Standoff

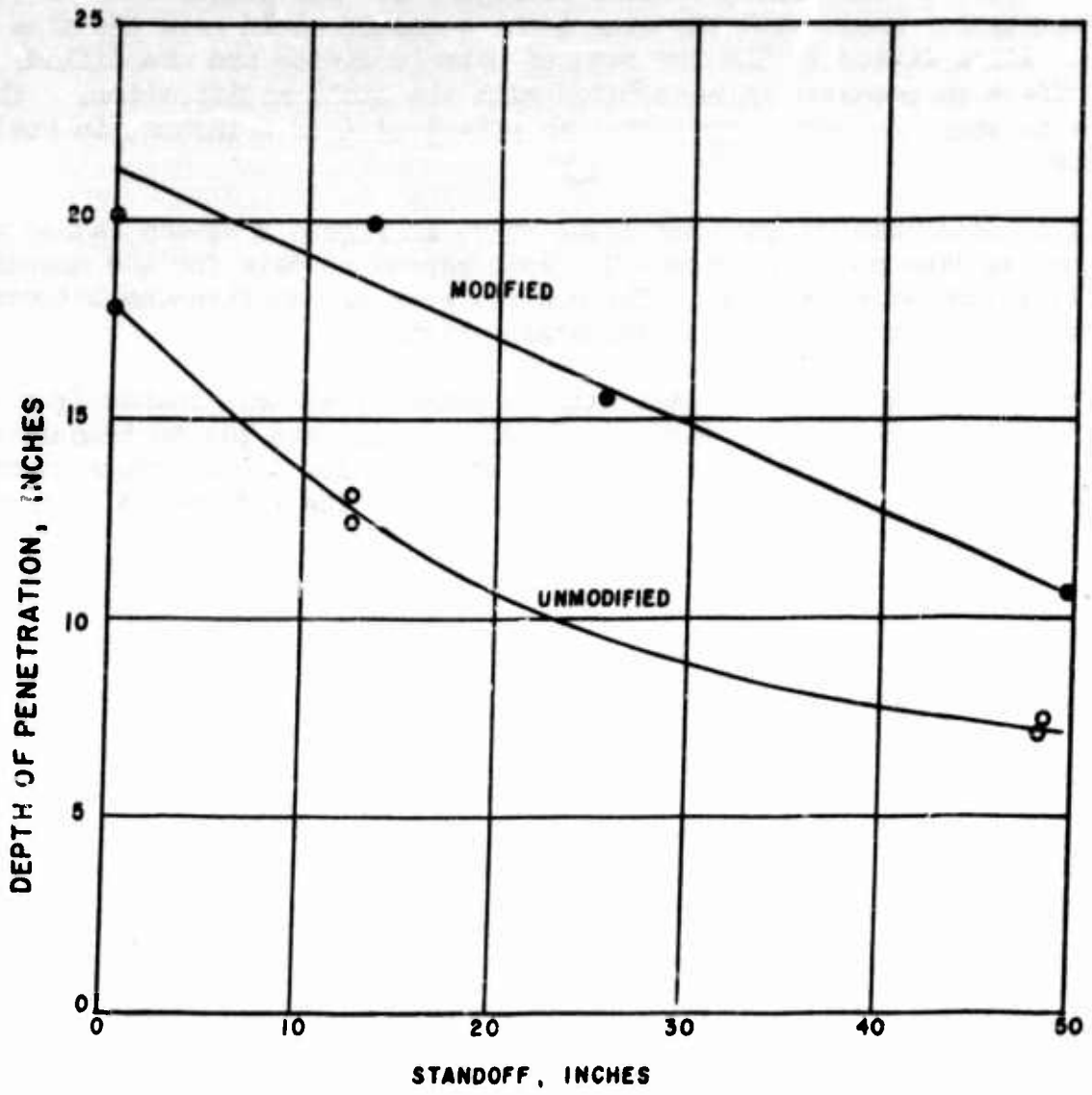

ALL ROUNDS FIRED STATICALLY, AT 0 DEGREES OBLIQUITY

PLOTTED POINTS ARE AVERAGES OF 10 ROUNDS

FOR THE UNMODIFIED SHELL, THE DISTANCE BETWEEN PROJECTILE AND ARMOR; FOR THE MODIFIED SHELL (8-7/8" OF OGIVE CUT OFF), THE DISTANCE FROM PROJECTILE TO ARMOR LESS 8-7/8".

Figure 8 · Penetration of Mild Steel by 106-MM M344 HEAT Projectiles, Modified and Unmodified, at Various Amounts of Standoff

The data of Table III are shown on Figure 8. The points were plotted so that results for shell with the same total standoff would have the same abscissa. Lines fitted to the two sets of data (modified and unmodified) show the effect on penetration associated with the shell modification. The difference between the curves indicates an effect of 4 to 6 inches, in static detonations.

It is noted merely that the lower curve in Figure 8 agrees rather well with the broken-line curve in Figure 7. Both represent data for the unmodified shell, detonated statically. There were, however, differences between them in obliquities and the use of the armor skirt.

Two groups of shell were detonated statically at 48.5 inches from the main armor. For one of these groups a 1/2-inch skirt was placed immediately in front of the shell (Figure 2). Total penetration for these groups averaged 7.3 inches without skirt and 7.1 inches with skirt. The difference is not statistically significant.

A comparison of two test results is given in Table IV.

Table IV. Comparison of Static Detonations Conducted Here and Those Reported in Reference 6, with M344 Projectiles with Ogives Intact, at 0° Obliquity.

Standoff, inches	Average Penetration, inches: Firings in This Report Against Mild Steel	Average Penetration, inches: Firings of Reference 6 Against Armor Plate
0	17.8	14.4
7.9	----	10.2
12.5	12.8	----
18	----	5.0
31.5	----	4.7
48.5	7.3	----

Three important points are brought out in the Table IV. First, both test programs indicate a marked decrease in penetration as standoff is increased. Second, the commonly accepted belief that shaped charges at optimum standoff (built-in standoff or 0 inches standoff in the Table IV) will penetrate only about 85% as much armor plate (300 to 400 Bhn) as they will mild steel (100 to 150 Bhn) is substantially borne out. Third, as standoff increases the difference between the penetration into armor plate and that of mild steel becomes more pronounced. This is also accepted theory.

3.3 Observations

The conical-shaped ogive of the 106-mm, M344, HEAT projectile has a 9/32-inch wall thickness. Except for the point-initiating mechanism (Figures 1 and 9), the ogive is fabricated from steel. A jet passing through the axis of the ogive would penetrate only the nose section (light metal, mechanism)

which is about two inches in length. Removing the ogive, for static conditions, increased the penetration 4 to 6 inches (Figure 8) in mild steel. The tests of the M344 reported in Reference 6 also demonstrated that a significant increase in penetration could be obtained by removing the ogive prior to static detonation.

In the spaced-armor tests of Reference 5, using the 3.5-inch, M28A2, HEAT rocket heads statically detonated against a simple mild steel spaced armor, the spaced armor tended first to increase the total penetration and then to decrease it, with increased space. At 6 inches the total penetration was about 8% higher than into solid steel, and about 18 inches of space was required for a 25% reduction. The 106-mm, HEAT, M344 projectile, used throughout this test, at 6 inches of space, gave a 13% reduction (Table I) and at 18 inches of spacing gave about 27% reduction of total penetration.

The poor performance of spaced armor against the 3.5-inch, M28A2 rocket head at short spaces is apparently due to insufficient standoff built into the round, for the cone used, whereas the 106-mm apparently has a standoff much closer to the optimum built into it.

Spaced armor appeared to have no effect except to increase standoff and to provide an additional thickness, i.e., the thickness of the skirting plate, for the jet to penetrate. Two groups of shell were statically detonated at 48 inches standoff with only one group using a skirting plate. The difference in average total steel penetration, .2 inches, (Table III) was considered statistically insignificant. Thus, the effectiveness of spaced armor in reducing the jet penetration seems to be nothing more than standoff effect.

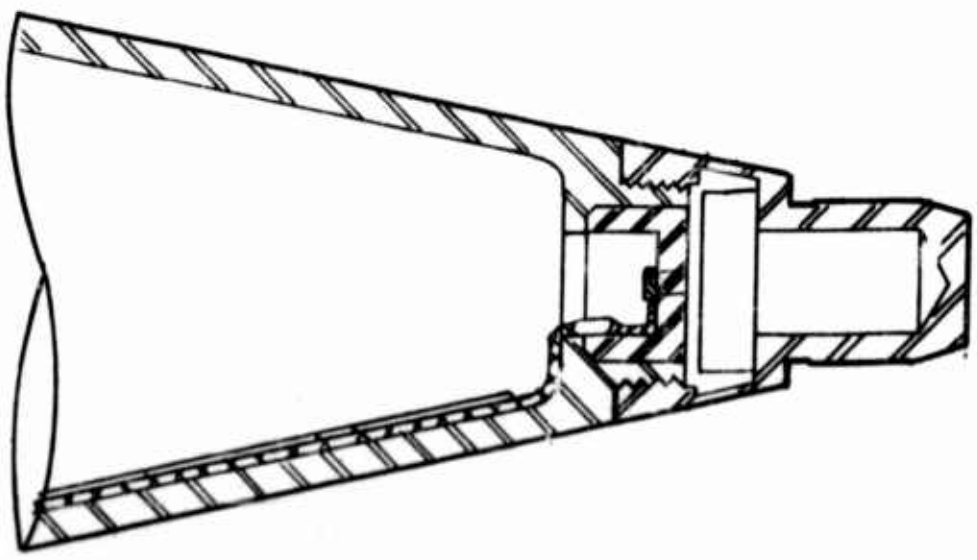

Figure 9: Cross Section of the Nose Section of the M344 HEAT Projectile.

4. (C) CONCLUSIONS

Obliquity has little or no effect on actual penetration when line-of-jet thicknesses and distances are used.

An average of 4 to 6 inches greater penetration is obtained when the ogive of the M344, HEAT round (statically detonated) is removed.

The M344, HEAT round gave an average of 3 to 5 inches greater penetration when it was dynamically fired than when it was statically detonated. This increase may in part be attributable to the extra velocity imparted to the jet by a value equal to the velocity of the projectile.

The effectiveness of any spaced-armor arrangement, against HEAT ammunition, will be strongly influenced by the nature of the attacking projectile, particularly by its standoff characteristics. Thus knowledge of the standoff characteristics of the HEAT projectiles to be defeated is essential. The greater the increase in standoff beyond that provided by the ogive of the M344, the greater will be the loss of penetrating ability.

Aside from the fact that spaced armor increases the standoff and provides an additional thickness equal to that of the skirting plate, no other effect on the performance of the M344 round was noted.

SUBMITTED:

S. M. Keithley
S. M. KEITHLEY
Project Engineer

REVIEWED:

W. C. Pless
W. C. PLESS
Chief, Armor Branch

W. A. GROSS, JR.
Chief, Automotive Division

APPROVED:

for H. A. NOBLE
Assistant Deputy Director
for Engineering Testing
Development and Proof Services

REFERENCES (U)

1. Eichelberger, R. J., "Defense Against Hollow Charges," in Transactions of Symposium on Shaped Charges, APG: BRL R837, 1951 (Report C).

2. Firestone Tire and Rubber Company, "105-mm Battalion Antitank Project, Fifteenth Progress Report," October 1951 (Report C).

3. Heirlic, H, "Spaced Armor" in Report of Second Tank Conference, APG: BRL R779, 1950 (Report C).

4. Schnarr, C. A., APG, D&PS, AD 1246, "Ballistic Performance of Spaced Armor" 1956 (Report C).

5. Dykstra, J. A., "Static Tests of Spaced Armor vs. HEAT Ammunition" APG: BRL M134.

6. Feroli, J. A., APG, D&PS, Penetration and Lethality Tests of the 106-mm HEAT M344 (T119E11) Shell of the BAT Weapon, Fifth Report on Project TA1-1540, May 1956 (Report C).

APPENDICES

A, CORRESPONDENCE A-1

B, DISTRIBUTION B-1

CONFIDENTIAL

STANDARD FORM NO. 64

APPENDIX A
Correspondence

Office Memorandum • UNITED STATES GOVERNMENT

MrJDDykstra/ghm/22261

TO : Director, Development and Proof Services
ATTN: Armor Branch

DATE : 25 July 1957

FROM : Chief, Weapon Systems Laboratory, Ballistic Research Laboratories

SUBJECT: Test of HEAT Projectiles Against Spaced Armor - Project TB3-1224(U)

1. In connection with Ordnance Project TB3-1224, it is requested that firings be conducted to determine the stopping power of various arrangements of spaced armor when attacked by shaped charge projectiles. Results of previous tests (reported, for example, in AD 1246, "Sixteenth Report on Ordnance Project TB3-1224) based on limited firings have tended to be inconsistent with expectations based on static firings of shaped charge projectiles conducted by the BRL. The object of the proposed test is to resolve the apparent differences and to further investigate the performance characteristics of spaced armor when attacked by HEAT projectiles. The detailed test plan is provided as Inclosure 1. As may be seen, factors associated with dynamic versus static firings, plate spacing and armor obliquity are to be investigated.

2. The results of the subject test will be classified Confidential, its DA priority is 1A and funding is to be provided under BA No. ~~492-217-01~~. Not to be used in D&PS

3. Mr. John Dykstra, telephone extension 22261, will be the Weapon Systems Laboratory project officer and should be contacted for any further details relative to the test program.

4. It is requested that completed Authorized Test Program Form ORDBG-TF-997, giving a breakdown of estimated cost, be forwarded to Chief, Weapon Systems Laboratory prior to commencement of work on this program. A rough estimate of the date of completion of the firing program is also desired.

5. Expenditure of funds for this program will not exceed the agreed upon total estimated cost without specific authority of the Chief, WSL, BRL.

6. Clearance to commence this program will be furnished by phone and confirmed by a second memorandum to Director, D&PS from Chief, WSL, after review and agreement as to estimated cost.

Frank E. Grubbs

FRANK E. GRUBBS
Chief, Weapon Systems Laboratory

1 Incl
1. Plan of Test

CC:
BRL Safety Office
BRL Budget Office

370680

CONFIDENTIAL

PLAN OF TEST - 106mm HEAT PROJECTILE M344
VERSUS SPACED ARMOR - PROJECT TB3-1224

1. The ammunition to be fired is the 106mm M344 HEAT projectile. It is desired that all test rounds be from the same lot, including those modified for static detonation. Ten fair hits shall be fired at each test condition.

2. Spaced plate and target material may be either mild steel, unheat-treated armor or specification armor, final choice to be made by the BRL on advice from D&PS on available material. All steel used shall have comparable characteristics in order to avoid differences of strength or hardness level over the length of penetration. Steel of uniform quality is to be used throughout the test.

3. Total depth of penetration shall be determined accurately to within + 1/4" for all rounds. Basic target shall consist of a pack of plates of uniform thickness maintained solidly in contact and of sufficient number to completely contain the penetration. Thickness of the individual plates will be 1/2" to 1" inclusive.

4. Face plates, when used, will be of the same armor as the basic target and of any convenient area. Space shall be the perpendicular distance from the back of the face plate to the face of the basic target. Space shall be maintained by adequate supports between the face plate and basic armor to prevent collapse of the face plate on impact. Such supports shall not interfere with the jet.

5. Test conditions shall be as follows:

a. Static Tests:

Space (in)	Obliquity (degrees) 0	45	60
0	X		X
6	X		X
8-1/2		X	
12	X		X
17			
24	X		X

b. Dynamic tests:

Space(in)	Obliquity (degrees) 0	45	60
0	X	X	X
6	X		X
8-1/2		X	
12	XM		XM
17	X	X	
24	X		X

6. High speed motion pictures (8 or 16mm Faxtax) shall be taken of five rounds of each of the conditions marked "M" of 6b for determination of fuze actions and face plate collapse.

7. Dynamic tests (paragraph 6b) are to be fired first, with order of preference 60°, 0°, 45°.

ORM NO. 64

Office Memorandum • UNITED STATES GOVERNMENT

MrJDDykstra/ghm/22261

TO : Director, Development and Proof Services
ATTN: Automotive Division, Armor Branch

DATE: 3 December 1957

FROM : Chief, Weapon Systems Laboratory, Ballistic Research Laboratories

SUBJECT: Test of HEAT Projectiles Against Spaced Armor - Project TB3-1224

REFERENCE: BRL letter dated 30 July 1957

1. The estimated cost of this program as contained in the Authorized Test Program Form dated 19 September 1957 and revised November 1957 has been reviewed and approved.

2. It is requested that this test be executed as planned, commencing as soon as possible. DA priority of this project is 1A.

3. Funds in the amount of $21,930.74 are to be transferred from Project TB3-1224, XO No. 492-318-01, to cover cost of this test.

4. It is requested that Mr. John Dykstra, Extension 22261, be notified when firing is begun.

Frank E. Grubbs

FRANK E. GRUBBS
Chief, Weapon Systems Laboratory
Ballistic Research Laboratories

CC:
BRL Budget Office
BRL Safety Office
Ch, Adm Div, BRL
Program Planning Off, D and PS

STANDARD FORM NO. 64

Office Memorandum · UNITED STATES GOVERNMENT

MrJDDykstra/ghm/22261

TO : Director, Development and Proof Services
ATTN: Automotive Division, Armor Branch

DATE: 17 March 1958

FROM : Chief, Weapon Systems Laboratory, Ballistic Research Laboratories

SUBJECT: Test of HEAT Projectiles Against Spaced Armor, Project TB3-1224

1. It is requested that the subject test currently in progress be extended by statically firing 10 rounds at normal obliquity against each of the following conditions:

a. 1/2" faceplate, 48" space.

b. No faceplate, projectile 12.5" and 48.5" from target pack.

c. No faceplate, ogive of projectile sawed off just ahead of cone base, base of cone 21.2", 33.2" and 57.2" from target pack.

These 60 rounds should be of the same lot of ammunition as those used in the balance of the test if possible. Target makeup should be consistent with the remainder of the test.

2. It is requested that an estimate of any additional funding required be submitted to this Laboratory.

Frank E. Grubbs

FRANK E. GRUBBS
Chief, Weapon Systems Laboratory

CONFIDENTIAL

Test of HEAT Projectiles Against Spaced Armor - (U)
Project TB3-1224/104

Chief, Weapons Systems
Laboratory, Ballistic
Research Laboratories
ATTN: Mr. John Dykstra

Chief, Automotive Div.,
Engineering Testing, DRIS

22 September 58
Mr SWKeithley/bc/28264

1. As per conference with Mr. Dykstra, an "estimate of cost" has been prepared for the static detonation of an additional 25 106-mm HEAT M344 projectiles.

2. Ten of the additional rounds will be detonated to determine the reductions of jet penetration caused by the nose section of the ogive. This will be accomplished by sawing off the ogive just ahead of the cone base. The modified projectile will then be detonated, at normal obliquity, into a "mild steel" target at a standoff equal to the length cut off of the projectile.

3. The remaining unmodified rounds will be detonated at the normal built-in standoff to determine the variation in jet penetration between the two lots of projectile used in this test.

4. The total estimate of cost is $2087.00.

CC
BRL Budget Office

W. A. GROSS, JR.

D580666

DISPOSITION FORM

SECURITY CLASSIFICATION (if any)

UNCLASSIFIED

FILE NO.

SUBJECT Test of HEAT Projectiles Against Spaced Armor, Project TB3-1224

TO Director, D&PS
ATTN: Automotive Div., Armor Br.

FROM Chief, WSL, BRL

DATE 6 October 1958

COMMENT NO. 1

MrJDDykstra/ghm/22261

1. The extension of subject test proposed in your memo dated 22 September 1958 has been reviewed and cost estimate per Authorized Test Program Form dated 19 September 1958 approved.

2. Funds in the amount of $2,096.00 are to be transferred from Ordnance Project TB3-1224, XO No. 492-318-11 (FY 59) to cover cost of this test.

Frank E. Grubbs

FRANK E. GRUBBS
Chief, Weapon Systems Laboratory

CC
Budget Branch, BRL

DD FORM 1 FEB 55 96 REPLACES DAF FORM 95, 1 OCT 48, WHICH MAY BE USED

U. S. GOVERNMENT PRINTING OFFICE : 1955 O - 3[illegible]

A-7

CONFIDENTIAL

AD 309418

Armed Services Technical Information Agency

ARLINGTON HALL STATION
ARLINGTON 12 VIRGINIA

FOR
MICRO-CARD
CONTROL ONLY

1 OF 1

NOTICE: WHEN GOVERNMENT OR OTHER DRAWINGS, SPECIFICATIONS OR OTHER DATA ARE USED FOR ANY PURPOSE OTHER THAN IN CONNECTION WITH A DEFINITELY RELATED GOVERNMENT PROCUREMENT OPERATION, THE U. S. GOVERNMENT THEREBY INCURS NO RESPONSIBILITY, NOR ANY OBLIGATION WHATSOEVER; AND THE FACT THAT THE GOVERNMENT MAY HAVE FORMULATED, FURNISHED, OR IN ANY WAY SUPPLIED THE SAID DRAWINGS, SPECIFICATIONS, OR OTHER DATA IS NOT TO BE REGARDED BY IMPLICATION OR OTHERWISE AS IN ANY MANNER LICENSING THE HOLDER OR ANY OTHER PERSON OR CORPORATION, OR CONVEYING ANY RIGHTS OR PERMISSION TO MANUFACTURE, USE OR SELL ANY PATENTED INVENTION THAT MAY IN ANY WAY BE RELATED THERETO.

CONFIDENTIAL

UNCLASSIFIED

UNCLASSIFIED