UNCLASSIFIED

AD 273 682

Reproduced
by the

ARMED SERVICES TECHNICAL INFORMATION AGENCY
ARLINGTON HALL STATION
ARLINGTON 12, VIRGINIA

UNCLASSIFIED

# DISCLAIMER NOTICE

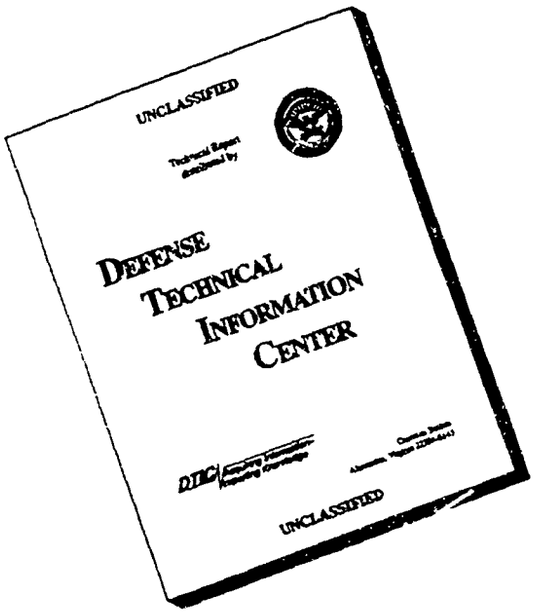


THIS DOCUMENT IS BEST QUALITY AVAILABLE. THE COPY FURNISHED TO DTIC CONTAINED A SIGNIFICANT NUMBER OF PAGES WHICH DO NOT REPRODUCE LEGIBLY.

NOTICE: When government or other drawings, specifications or other data are used for any purpose other than in connection with a definitely related government procurement operation, the U. S. Government thereby incurs no responsibility, nor any obligation whatsoever; and the fact that the Government may have formulated, furnished, or in any way supplied the said drawings, specifications, or other data is not to be regarded by implication or otherwise as in any manner licensing the holder or any other person or corporation, or conveying any rights or permission to manufacture, use or sell any patented invention that may in any way be related thereto.

AS AD NO. 273682

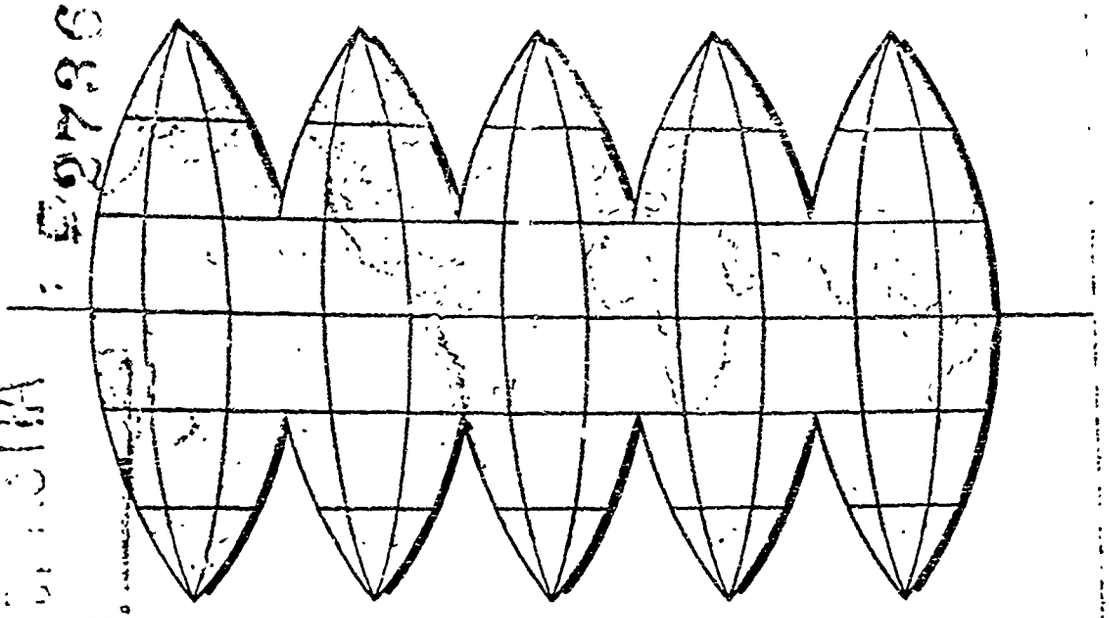

# UNICOM

BELL SYSTEM

RCA

# UNICOM UNIVERSAL INTEGRATED COMMUNICATION SYSTEM

PROGRESS REPORT FOR THE
TENTH QUARTER
1 OCTOBER THROUGH 31 DECEMBER 1961

VOLUME I

REPORT NO. 10

THE OBJECTIVES OF THIS CONTRACT ARE TO DEVELOP SYSTEMS ENGINEERING PLANS FOR A PROTOTYPE OF THE UNIVERSAL INTEGRATED COMMUNICATION (UNICOM) SYSTEM AND TO PROVIDE AND TEST A SKELETONIZED ENGINEERING MODEL (PRELIMINARY TYPE) OF THE SYSTEM

# TABLE OF CONTENTS


| | Page |
|---|---|
| BACKGROUND AND PURPOSE | 1 |
| ABSTRACT | 3 |
| **Part I. SYSTEMS ENGINEERING** | |
| SECTION 1. SYSTEM OBJECTIVES | 5 |
| User Needs | 5 |
| Subscriber Station Arrangements | 9 |
| System Organization and Features | 10 |
| Program for the Next Interval | 10 |
| SECTION 2. NETWORK PLANNING | 13 |
| Basic Network Structure | 13 |
| System Control | 15 |
| Traffic Engineering | 15 |
| Programming and Simulation | 16 |
| Program for the Next Interval | 17 |
| SECTION 3. SWITCHING AND SIGNALING | 19 |
| Switching Requirements and Method of Operation | 19 |
| Switching Matrices | 23 |
| Signaling and Supervision | 24 |
| Central Processor | 29 |
| Store and Forward Operation | 30 |
| Program for the Next Interval | 34 |
| SECTION 4. TRANSMISSION AND STATIONS | 37 |
| Transmission Engineering | 37 |
| Transmission Facilities | 37 |

| | | Page |
|---|---|---|
| | Digital Signal Converters | 44 |
| | Station Engineering | 45 |
| | Program for the Next Interval | 46 |
| SECTION 5. | SYSTEM TESTS AND SYSTEM STANDARDS | 49 |
| | Test Model Test Plan | 49 |
| | Transmission Subsystem Engineering Tests (Pre-Test Model) | 49 |
| | Communication System Standards | 52 |
| | Program for the Next Interval | 53 |
| | Part II. DEVELOPMENT | |
| SECTION 6. | DESIGN AND FABRICATION OF THE TEST MODEL | 55 |
| | Test Model Block Diagram | 55 |
| | Equipment Design | 59 |
| | Central Processor | 61 |
| | Space-Division Switch | 63 |
| | Time-Division Switch | 66 |
| | Central Processor Stored Program | 68 |
| | Message Store and Forward Modules | 70 |
| | Conversion Group | 73 |
| | Transmission Termination Equipment | 75 |
| | Central Timing Unit | 78 |
| | Console Group | 80 |
| | Digital Subscriber Station | 82 |
| | Power System | 85 |
| | Communication Circuits | 86 |
| | Test Control Center | 86 |
| | Test Equipment | 87 |
| | Test Model Equipment Integration Program | 90 |
| | Program for the Next Interval | 90 |
| CONFERENCES | | 93 |
| KEY PERSONNEL | | 101 |

# APPENDICES


| Appendix | | No. of Pages |
|---|---|---|
| | Part III | |
| 3A | Maintenance and Reliability Guideline for UNICOM, D. R. Barney, G. F. Clement, C. W. Haas, and R. L. Simms, Jr. | 14 |
| 4A | Time Required to Frame a Log-Differential Pulse Code Modulation System, J. J. Horzepa | 8 |
| 4B | Present Engineering Plan for Operating Facsimile in the UNICOM Network, J. J. Horzepa | 9 |
| 6A | Organization of the Switching Center Central Processor Program, K. A. Heller | 14 |
| 6B | Traffic Attendant Console, Design Proposal, R. F. Cook | 16 |

# FIGURES


| Figure | | Page |
|---|---|---|
| 4-1 | Four-Phase Data Modem Performance in Presence of Delay Distortion | 38 |
| 4-2 | Aircraft Interference in Tropo System, with 15-Foot Antenna, 100-Mile Path, and 2-kmc Frequency | 41 |
| 4-3 | Aircraft Interference in Tropo System, with 15-Foot Antenna, 100-Mile Path, and 4-kmc Frequency | 42 |
| 6-1 | Equipment-Oriented Functional Diagram of the UNICOM Test Model | 57 |
| 6-2 | Artist's Concept of UNICOM Test Model | 58 |
| 6-3 | Artist's Concept of UNICOM Physical Design | 60 |
| 6-4 | UNICOM Program Store | 62 |
| 6-5 | Call Store | 63 |
| 6-6 | Space-Division Switch | 65 |
| 6-7 | Time-Division Switch | 67 |
| 6-8 | Message Store and Forward Module | 71 |
| 6-9 | Integrator-Feedback Type Log-Differential Encoder | 74 |
| 6-10 | Block Diagram of Decoder | 75 |
| 6-11 | Transmission Termination Equipment | 76 |
| 6-12 | Central Timing Unit | 79 |
| 6-13 | Console Group | 81 |
| 6-14 | Digital Subscriber Station | 83 |
| 6-15 | Artist's Concept of UNICOM Test Model Digital Subscriber Stations | 84 |
| 6-16 | Power System | 85 |
| 6-17 | Artist's Concept of UNICOM Test Model Test Control Center | 88 |
| 6-18 | Data Generator/Receiver and Error Instrumentation | 89 |

# BACKGROUND AND PURPOSE

Evolutionary advances in military communications have not kept pace with the revolutionary achievements in firepower and mobility since World War II. Communications to support these elements have been developed by providing an assortment of little communications systems designed to do highly specialized jobs.

The effects of these specialized systems have been duplications of research, development, and management effort, and operational limitations which deny the use of the idle capacity of specialized trunk circuitry. As a result of the lack of flexibility, integration, and standardization in the basic military communications system, the logistic support, training, maintenance, and operations are very costly in terms of money and manpower.

The Signal Corps has been actively considering these deficiencies and, in 1954, the concept of a Universal Integrated Communication (UNICOM) System was evolved. This concept has been refined by the United States Army Signal Research and Development Laboratory (USASRDL). Technical specifications for UNICOM were prepared in 1958 and a research and development contract was signed with the Western Electric Company Defense Projects organization in 1959. The Bell Telephone Laboratories is undertaking to fulfill this contract on behalf of the Western Electric Company with assistance from International Telephone and Telegraph Corporation and the Radio Corporation of America.

UNICOM will comprise a complete military communications system covering the Continental United States (CONUS), the intercontinental area, and the support regions. It will also be capable of extension into the combat areas by compatible interconnection with tactical communications systems.

UNICOM will include transmission and trunking systems, local and long distance switching offices, and subscriber facilities. The basic plan proposes that many forms or modes of communications using either digital encrypted or analog transmission be handled over standardized channels. Automatic switching will furnish fast, direct service between subscriber stations and will permit a high degree of reliability through automatic multialternate routing and redundant netting. The

plan also provides for handling the large class of connections for which the technique of message switching is both effective and economical. Precedence and security features are also included in the system.

To maintain at least minimal backbone traffic capabilities in the face of enemy action, UNICOM must be designed to make smooth and rapid adjustment to radical changes in network capabilities, including changes that result from the most adverse conditions of enemy jamming and nuclear attack.

The development of UNICOM involves a study of needs, decisions on basic outline through examination of system elements, and implementation of these elements using the latest advances in the art.

The effort under this contract is divided into two general areas. The first is the long-range systems engineering directed toward establishing detailed plans for the over-all system. The second area involves taking all necessary steps to develop and provide a preliminary engineering Test Model. The two aspects of the work are being carried on concurrently and are closely coordinated.

# ABSTRACT

In the System Objectives area, Section 1, the major effort was on the coordination of the UNICOM System Engineering Plan. Several user needs were defined in some detail. Station arrangements for digital stations were revised during the quarter.

In the Network Planning area, Section 2, a report on the transmission facilities required for UNICOM Phase I (1965) was prepared. The requirements in the report were based on 4 switching centers, 440 subscribers, and traffic characteristics as defined by the Army Communication System Division (ACSD). A study has been initiated on the usefulness of a digital line concentrator by computing possible savings in transmission and terminal facilities for Phases I, II, and III. Traffic estimates have been started for limited and nuclear war conditions for Phases I, II, and III. An initial system control plan has been formulated and is being reviewed. Further work in traffic engineering is reported.

In the Switching and Signaling area, Section 3, effort was largely in support of development and in preparation of additional requirements sections for the System Engineering Plan. A brief study of the switching and signaling aspects of line concentrators was conducted and this work is continuing. Studies supporting the choice of the space-division matrix to be used in UNICOM are nearly complete. A study of three plans for signaling between subscriber stations and the switching center shows a preference for the choice of a plan utilizing the message channel for high-speed heading transfer. An initial maintenance and reliability guideline was issued during the quarter. Several call handling procedures for store and forward service were defined as a basis for preparing program requirements for the central processor store and forward operations.

In the Transmission and Stations area, Section 4, theoretical and computer simulation work was done on digital modem performance as a function of attenuation and delay distortion over various bandwidths. Objectives for the performance of digital modems were included in the System Engineering Plan, as have specifications for digital terminating unit basic optional arrangements and features. Specifications for the auxiliary circuitry of the subscriber set were revised. A study of the problem of resynchronizing differential pulse code modulation has been completed.

Work in Systems Tests and Standards, covered in Section 5, was directed toward the Test Model test plan, preparations for certain transmission subsystem engineering tests to be initiated before the Test Model is completed, and preparation of material for military communication standards. In the latter area, drafts of Bell Telephone Laboratories work on Sections 3.1 and 3.3 of MIL 188 were drawn up and the writing of Engineering and Installation standards for Defense Communication Agency electronic switching centers was initiated.

In Design and Fabrication of the Test Model, covered in Section 6, the design and experimental laboratory work under way progressed as planned. The organization and requirements of the major equipment design areas were defined and design of the circuits was detailed. In the programming work for the Test Model, the functional specification for the operational programs was completed, thus defining the major tasks which the central processor must perform.

# PART I
# SYSTEMS ENGINEERING

# SECTION 1
# SYSTEM OBJECTIVES

The objectives of efforts in this area are:

(1) To determine the user needs for UNICOM

(2) To specify requirements for subscriber station arrangements

(3) To formulate requirements for system organization and features.

Much of the work consists of consultation on user needs and system features with the departments responsible for subsystem engineering and development. While major system features have been established for some time, minor features and services continue to be proposed, defined, and refined. Close consulation at this stage assures that implementation of the features is consistent with user needs and system objectives.

The work in this section is reported under the following headings:

(1) User Needs

(2) Subscriber Station Arrangements

(3) System Organization and Features.

## USER NEEDS

During this quarter, work has been directed primarily toward (1) establishing the details of several specific user needs and (2) identifying those needs of Phase II UNICOM users that differ from the needs of Phase I users defined in the report for the ninth quarter. This work is reported in detail below.

### Specific User Needs

The following paragraphs describe the results of investigation of features to fulfill specific user needs.

Hold Feature. This feature permits a subscriber who is engaged in a Category I (right-of-way) digital voice call to switch to a second incoming Category I voice call while holding the first call. Subsequently, he may switch back to the first

call, and so forth. This means of operation gives a user greater flexibility in dealing with the second call than he would have if he had to terminate the first call in order to accept the second one.

Infrequently, it may occur that a third Category I call will attempt to reach a given subscriber. While it is possible to have this call queue after the second call, this potentially involves long waiting times for the calling subscriber, long holding times for trunks, and a somewhat confusing sequence of operations for the called subscriber. In view of this, a third Category I call incoming to a given station will be given a busy signal, at least in the initial implementation of this feature.

In order to conserve trunk usage, in the initial implementation the hold feature will not permit origination of a second call while a call is being held.

Recording of Accounting Information. Budgetary requirements will necessitate recording sufficient information about usage of facilities to permit allocation of charges to the agencies using the UNICOM system. The following data are most significant for this purpose:

(1) Calling number
(2) Called number(s)
(3) Precedence(s)
(4) Handling method (direct or store and forward)
(5) Time of connection
(6) Time of disconnection.

From this data it is possible to determine parameters that are significant in deriving charges for rendered services. Some of these parameters are: duration of call, length of haul, information rate or bandwidth, and special speed-of-service demands.

Required accounting data will be recorded at the switching center on magnetic tape for subsequent off-line processing by data processing equipment.

Addresses for STARCOM-UNICOM Interconnection. Interchange of traffic between UNICOM and the Strategic Army Communications Network (STARCOM) requires that stations in each network be addressed in a format that can be handled by the system receiving the heading.[1] UNICOM addresses are numeric: STARCOM addresses alphabetic.

[1]The discussion under this and the following two topics applies to other networks using the controlling Allied Communication Publications. ACP 121 Communications Instructions, General details the manner in which station designations are constructed. ACP 127 Communications Instructions, Tape Relay Procedure prescribes the message heading format and the means of handling such messages at tape relay centers.

It is tentatively planned to assign addresses in the UNICOM numbering plan to all stations in STARCOM which may be required to receive traffic from UNICOM stations. It is also planned to assign addresses in Allied Communication Publications format (ACP 121) to all UNICOM stations which may be required to receive traffic from stations using that format. The second letter in the ACP 121 format would designate that the address is for a UNICOM subscriber, while the third letter would designate the geographical location of the serving UNICOM switching center.

Both STARCOM and UNICOM directories would need to list the appropriate stations in both networks.

Further study of this topic will be continued during the eleventh quarter.

Equivalence of STARCOM and UNICOM Precedence Levels. When STARCOM traffic is passed to UNICOM, it does not appear necessary to apply to it the much more stringent UNICOM delivery criteria.

Table 1-1 shows that UNICOM Category II delivery time is equivalent to the requirement for the top three STARCOM categories, UNICOM Category III for STARCOM priority, and UNICOM Category IV for STARCOM routine and deferred. UNICOM Category II traffic does not, however, pre-empt facilities as does traffic in the top three STARCOM categories.

Table 1-1

UNICOM AND STARCOM DELIVERY TIME CRITERIA

| STARCOM* | | UNICOM | |
|---|---|---|---|
| Category | Delivery Time | Category | Delivery Time† |
| Emergency‡ | 5 minutes | II‡ | 6 seconds |
| Flash‡ | 20 minutes | II | 2 minutes |
| Operational-Immediate‡ | 30 minutes | III | 30 minutes |
| Priority | 4 hours | IV | 4 hours |
| Routine | 8 hours | | |
| Deferred | 12 hours | | |

*For traffic between Department of the Army or Joint Communication Agency and cryptographic sections of primary and major relay stations serving major headquarters or areas as defined in TM11-490-1.

†Applies to varying percentages of the total traffic in each category.

‡Pre-emption of facilities used by low-precedence traffic authorized.

Further study must be undertaken to determine how STARCOM precedences should be treated in UNICOM.

Treatment of STARCOM Security Indication. In the ACP 127 heading format, the letters ZNR indicate that a message can be transmitted over non-secure facilities. The actual classification of a message appears as the first phrase of the text. In STARCOM, all secure facilities are authorized to handle both Secret and Confidential traffic.

It is expected that some UNICOM subscriber extensions will be authorized to receive classified traffic up to Confidential only. A message from STARCOM without the ZNR pro-sign might be classified either Secret or Confidential. To avoid the very undesirable necessity for reading the text, messages from STARCOM without the ZNR indication will be delivered only to UNICOM stations that are authorized to handle at least Secret information.

JCSAN Implementation. Work has been initiated to determine the nature of the user needs if the functions of the Joint Chiefs of Staff Alerting Network (JCSAN) were to be implemented by UNICOM.

Restoral of Allocated Circuits. Study of the nature of the need for automatic restoral of allocated circuits has been initiated. The first step was to identify and explain the reasons for those applications which in present-day military networks employ allocated circuits rather than direct or store and forward service.

Analog User Needs. A study of Switched Circuit Automatic Network (SCAN) subscriber features has been started. The purpose of this study is to aid in the determination of UNICOM analog user needs. The assumptions of the study are that. (1) SCAN serves a reasonable cross section of military users whose needs can be handled on an analog basis and (2) SCAN provides features and services which, in various combinations, meet a substantial part of the needs of such users. It appears that most of the analog services and features provided in SCAN must also be made available in UNICOM.

Automatic Ancillary Devices. Questions on the nature of automatic ancillary devices, particularly unattended monitoring stations, have been formulated. Answers to these questions will form the basis for further analysis and review.

Printed Narrative Conferencing via Store and Forward Operation. Work has been initiated on a study of the feasibility of conducting teletypewriter conferences by means of store and forward (S/F) methods. The purpose of this method of operation would be to utilize the speed of UNICOM S/F handling in order to reduce the very long circuit holding times usually occasioned by teletypewriter conferences.

### Phase II User Needs

The subscriber list for UNICOM Phase II has been examined to determine whether any subscriber categories other than those served in Phase I need be served. Subscriber categories for Phase I were described in Appendix 1A in Volume II of the Progress Report for the Ninth Quarter.

It appears that the only additional category in the UNICOM subscriber list that can be identified for Phase II is that of the command post. It is assumed that, in Phase II, the command post "user" may utilize some of the newly developed operation centers, such as the Army Tactical Operations Centers (ARTOC). Work defining needs of such command posts will be continued in the eleventh quarter.

## SUBSCRIBER STATION ARRANGEMENTS

Work during this quarter was primarily directed toward (1) preparation of detailed requirements for the arrangement at digital stations and (2) resolution of security aspects of new station features.

### Arrangements at Digital Stations

A revision of the section of the UNICOM System Engineering Plan (SEP) dealing with digital subscriber station arrangements has been virtually completed. It contains considerable additional details about the method of use of the station by the subscriber. The following paragraphs summarize its conclusions on selected topics.

Lamp Displays. On outgoing calls, lamps will be lit in the appropriate control pushbuttons to indicate operation of the pushbutton. In general, signals from the switching center will control lighting of lamps confirming receipt of security category and special security handling instructions, while local circuits will light the lamps associated with controls for precedence and message handling.

Voice-Data Operation. Voice-data operation will be provided for connections that do not require the insertion of vocoders at switching centers. To permit the switching system to set up connections without vocoders, the station must signal its switching center when a voice-data call rather than a voice call is desired. Switching between the voice and data modes will be by manual pushbutton operation at each station.

Hold Feature. The telephone control set will have a "call waiting" lamp to indicate when a Category I call is camping on. Those stations authorized to have the hold feature described under specific user needs will have a hold key. Operation of the key followed by hang-up puts the original call into a held condition, and

permits the waiting call to be completed to the station. The "call waiting" lamp will again be lit to indicate that the first call is now waiting. Operation of the hold key and hang-up places the second call in a held condition, and allows the first call to complete again, and so forth. Hang-up without prior operation of the hold key disconnects the call.

## SYSTEM ORGANIZATION AND FEATURES

Work during the tenth quarter was directed primarily toward (1) revising existing sections and formulating other sections of the UNICOM System Engineering Plan (SEP), and (2) considering problems extending over two or more subsystems.

### UNICOM System Engineering Plan

As described in the Progress Report for the Ninth Quarter, the UNICOM SEP is being issued in draft form, a section at a time. Drafts are updated as required; the final plan will be issued at the end of the project.

This process is serving several purposes. Not only do the latest draft sections serve to integrate the various parts of the UNICOM system, but also to establish up-to-date requirements for Test Model development.

### Problems Extending Across Subsystem Interfaces

A major portion of the effort in this area was directed toward line concentrators. Factors affecting decisions regarding their use were examined and further studies of the subject have been initiated in the switching and signaling, network planning, and development areas.

## PROGRAM FOR THE NEXT INTERVAL

### User Needs

Consideration of needs relating to interconnection with SCAN and STARCOM, implementation of the JCSAN function, restoral of allocated circuits, service to analog users, connection of automatic ancillary devices, and the handling of printed narrative (PN) conferences will be continued.

User needs for Phase III users will be studied. A consolidated statement of user needs for all UNICOM phases is expected to be issued by the end of the eleventh quarter. Information on mobile users will be sought and their needs studied.

## Subscriber Station Arrangements

Work will continue on refinement of requirements for digital station arrangements. The SEP section on this topic will be reissued early in the next quarter. Analog station arrangements will be defined.

Human factors engineering work on station arrangements will be continued. An objective will be to specify mock-ups for subjective tests of user reaction to station arrangements.

A study of ancillary devices will be initiated with the objective of determining (1) which devices have to be served by UNICOM and (2) what new devices will be required to meet UNICOM service objectives.

## System Organization and Features

Work on the UNICOM SEP will continue as a major effort. Examination of system interfaces and consultation on problems extending across subsystems is expected to continue.

A task force study of the specific problem areas associated with providing graceful degradation of the UNICOM system confronted by transmission impairments will be initiated. The security plan for UNICOM is being revised with the objective of issuing the new plan during the twelfth quarter.

# SECTION 2
# NETWORK PLANNING

The objectives of network planning are (1) to determine the basic network structure including the traffic load, users, and network layout; (2) to devise a plan for controlling the UNICOM system to give the best service to the most important traffic, even under heavy loss of facilities; (3) to develop traffic engineering data and methods. Digital computer programming and simulation are required to support the above. The work is reported under the following four areas:

(1) Basic Network Structure

(2) System Control

(3) Traffic Engineering

(4) Programming and Simulation.

## BASIC NETWORK STRUCTURE

The objective of this work is to determine the approximate network layouts required to handle the estimated traffic in each of the phases of UNICOM implementation, with consideration given to economy and survivability.

The major results achieved during the tenth quarter, which are given in the following paragraphs, related to:

(1) Documenting the Phase I implementation plan

(2) Documenting the determination of UNICOM and STARCOM survivability under nuclear attack

(3) Examining the usefulness of digital line concentrators in UNICOM.

### Phase I Implementation Plan

This plan presents the transmission capability required for UNICOM Phase I (1965) based on 4 switching centers, 440 subscribers, and traffic characteristics as defined by the Army Communication Systems Division (ACSD). The primary results of this determination were summarized in the report for the ninth quarter. During the current quarter, the results of the study were presented orally to ACSD and a written report was prepared and submitted.

The plan is, of course, based strictly on the current traffic requirements, in which every subscriber line must be secure. The traffic includes only command, control, and intelligence information. New traffic data are being prepared, which will include some digital traffic of an administrative and logistic nature and also some analog traffic. Changes in required transmission facilities for different numbers of switching centers or subscribers, or different engineered traffic loads, can be accommodated in a reasonably straightforward way, based on the methods already documented.

## Survivability Computations

The ninth quarterly report summarized survivability calculations of the expected Phase I and Phase II versions of UNICOM, STARCOM, and the combination of UNICOM and STARCOM. The survivability was computed in terms of the attack price; that is, the number of ballistic missiles with nuclear warheads, of specific yield and specific circular probable error, that would have to be committed to insure the destruction, with a prescribed probability, of the system's ability to provide critical communications. The critical communications are those required among key users of UNICOM to provide controlled command of retaliatory forces after a nuclear attack. The principal unclassified conclusions of the work were stated in the ninth quarterly report.

During the tenth quarter the detailed results, on which the conclusions were based, were presented orally to USASRDL representatives. A written report is being prepared to document these results.

## Line Concentrators

The Phase I implementation plan has indicated the possibility of substantial savings in required transmission facilities in Phase I if digital line concentrators were available. For example, for a four-switching-center Phase I network, the use of concentrators could save about 140,000 circuit miles of 2.55-kbps loop facilities or about 30 percent of the total loop and trunk circuit miles required (50 percent of the loop miles). However, Phases II and III are also concerned, and it is essential to calculate possible savings during those phases and also the total savings over the expected implementation period.

Accordingly, a study has been initiated to compute the savings in transmission facilities and line termination equipment, based on the expected implementation schedule. The initial work on the study has been based on the current traffic and the user requirements. Early results of the work indicate savings in all three phases. In Phases I and II, the savings are primarily in required transmission facilities, whereas in Phase III the savings appear in both the transmission facilities

and the transmission terminal equipment, including key generators. The study is continuing and is expected to be reported on during the eleventh quarter.

Other Work

In addition, work has been initiated on traffic estimates for limited and nuclear war conditions for Phases I, II, and III, to supplement the existing cold war data, for Phases I and II, based on ACSD information. This work will continue into the next quarter. Tentative layouts for Phases II and III, based on the cold war data, have been made in connection with the concentrator applicability study. These layouts have indicated that, with concentrators, about 40 switching centers will be required in Phase III.

## SYSTEM CONTROL

The objective of the work in this area is to prepare a plan specifying the local and over-all system control measures which would allow the UNICOM system to give the best service to the most important traffic, even in the presence of severe traffic overloads and/or grave damage to the system.

The principal result achieved during the quarter was the preparation of the initial system control plan which was forwarded to USASRDL in draft form. As its name implies, this document is an initial version of the system control plan and contains the presently expected solutions to the system control problems. Many of the decisions have had to be based on the results of preliminary analyses, and work is proceeding to detail and verify the expected solutions and to examine some of the principal alternatives.

## TRAFFIC ENGINEERING

The principal problem here is to develop trunk engineering methods and data which will differ in two ways from most commercial practice. Trunk groups must be engineered to speed-of-service standards, as required by SCL-4083A and, as indicated in the preceding paragraph, it has been concluded that a symmetrical trunking scheme is required in order to have the best network survivability properties. The methods available in the art for engineering trunk groups in a network are largely confined to probability of blocking under a busy-signal-for-blocked-calls method of operation and to hierarchical alternate routing. (A blocked call is a call which cannot obtain a connection immediately.) Methods of engineering are being devised to allow for these two differences which, unfortunately, are not completely separable.

For engineering to speed-of-service criteria, an alternative method, an approximate one, has been devised for transforming speed-of-service requirements into equivalent blocked-call specifications and then applying known procedures. A computer program has been prepared to make the transformation, and a simulation will be initiated shortly and the results used to determine if the method is accurate enough to be useful.

## PROGRAMMING AND SIMULATION

During the tenth quarter, work was continued on the series of traffic simulations and related programs begun during the ninth quarter for guidance in the system control and traffic engineering areas. These were described in the ninth quarterly report. One new simulation with its related program has been started. In the following summary of the work done, the first five programs bear the same numbers as in the ninth quarterly report, and the sixth is the new one.

(1) Mixed Traffic Simulator. This program measures the effect of serving both direct and store and forward (S/F) traffic on the same trunk group. The program was completed during the ninth quarter, and test cases were run during the tenth quarter to determine the accuracy of previous approximate theoretical results. This study verifies the accuracy estimates made in the theoretical work and shows the thoeretical results to be less sensitive to the approximating assumptions than originally thought.

(2) Direct Traffic Alternate Route Simulator. This program simulates alternate routing of direct traffic in a generalized network. The extension of this program to encompass those situations in which routes are selected on a stage-by-stage basis has been completed, and the program is being used extensively in the system control effort. A further extension of the program, which will allow alternate routing to depend partially upon the instantaneous condition of the local links, has been flow charted and is being coded. This extension of the basic program, and other similar extensions to follow, will be useful in lending insight into the effectiveness of load-dependent alternate routing, which is at the heart of the more comprehensive system control schemes.

(3) Precedence Simulator. This program determines, from simulation, the delay distributions when traffic of different precedence levels is offered to a trunk group. The section of this program which is capable of simulating head-of-the-line priority systems has been completed, and a number of cases have been run off to compare the results with those of the priority calculator. A close correspondence resulted. The pre-emptive

section of the program is still being code checked, and a memorandum report is being prepared to describe the results and the program.

(4) Priority Calculator. This calculation of an approximate solution for a head-of-the-line priority queueing problem based on a published formula for the average delay was completed during the ninth quarter. During the tenth quarter, extensive tests were made and the results compared with those of the precedence simulator. The results showed excellent agreement, suggesting that the approximation used in the priority calculator may possibly be an exact result. A memorandum report of this program and the results will be prepared during the eleventh quarter.

(5) Indirect Traffic Alternate Route Simulator. This program will determine indirect traffic delays for different alternate routing schemes. Flow charting and coding were completed during the tenth quarter, and code checking has begun.

(6) Retrial Simulator. This program, which was started during the tenth quarter, will determine the delay distributions experienced by two precedence classes of traffic which are offered to a simple trunk group under a retrial discipline. In this discipline, calls which cannot obtain immediate service are offered again after a fixed interval, which, in this model, is either constant or exponentially distributed. The retrial interval is also being examined for suitability as a variable to affect system control. The delay distributions of each of the precedence categories will be examined and the program extended to encompass more complicated trunking patterns. The program has been coded and is presently being code checked.

## PROGRAM FOR THE NEXT INTERVAL

### Basic Network Structure Area

Work will be completed on documenting the survivability calculations.

Work will be completed on the study of line concentrators showing the extent to which savings will appear in Phases I, II, and III as currently defined.

Work will be initiated to determine the additional digital traffic of an administrative and logistic nature from users in the current list in both Phases I and II. Also, additional traffic from analog users will be estimated and submitted to USASRDL for approval. To the extent practicable, the computations of line concentrator applicability will be made to reflect these modified user and traffic assumptions.

## System Control Area

Work will be completed on a study of the reliability of traffic measurements and their application to UNCIOM system control, as well as on a preliminary examination of the behavior of networks using different alternate routing doctrines. Work will be initiated on the planning of a large simulation to test the performance of the contemplated UNICOM network and system control.

## Traffic Engineering Area

Work will be continued on the development of a method of engineering non-hierarchical alternate routing networks. Work will be initiated on a simulation program to ascertain the usefulness of the approximate method which has been devised to relate delay engineering to blocked-call engineering in a complex network.

## Programming and Simulation Area

Work will be continued to complete and extend the programs described under programming and simulation and to use them in the furtherance of the system control and traffic engineering efforts.

# SECTION 3
# SWITCHING AND SIGNALING

An objective of the systems engineering effort on switching and signaling is to provide support for Test Model development. Support in the switching and signaling area will be required throughout the UNICOM program. A second objective is to prepare requirements for UNICOM field installation equipments in the form of standards or specifications for switching and signaling. A final objective is to fit the Test Model concepts to implement Phases I, II, and III UNICOM installations. The work is reported under the following headings:

(1) Switching Requirements and Method of Operation

(2) Switching Matrices

(3) Signaling and Supervision

(4) Central Processor

(5) Store and Forward Operation.

During the tenth quarter most of the work was directed toward support of Test Model development and toward preparation of detailed switching and signaling requirements for inclusion in the System Engineering Plan (SEP), which is the medium for documentation of these specifications.

## SWITCHING REQUIREMENTS AND METHOD OF OPERATION

### Method of Operation

The work of detailing the method of operation of UNICOM calls has continued during this period. This work is directed toward providing a description of UNICOM call handling procedures for inclusion in the SEP. The method of operation will include a textual description of the manner in which the various classes of calls are completed in the UNICOM system, as well as a sequence chart version of the steps performed in the completion of calls. It will also include, in graphic form, a summary of features available to UNICOM users for various classes of calls.

The purposes of the method of operation study are as follows: (1) the interaction between the various components and subsystems will be indicated and any mismatch which may exist at the interfaces will be found by describing the

sequential steps necessary to complete the various classes of calls and (2) it will be possible to determine how the UNICOM system fulfills user needs by summarizing the operational features available to UNICOM users for various types of calls.

A description of several of the basic types of digital calls has been prepared. These will now be updated to reflect the recent work on signaling methods. The four of the more general call sequences which have been described in preliminary form are as follows:

(1) Digital voice call (vocoder or PCM)

(2) Digital printed narrative direct call

(3) Digital printed narrative store and forward calls that do not carry right-of-way (ROW) precedence

(4) Digital printed narrative store and forward ROW multiaddress call.

A preliminary version of a graphic representation of the features for various classes of calls has also been prepared. This takes the form of a series parallel combination of paths similar to the graph of a switching network. Each alternative service feature is represented by a branch on the graph. These branches are entered at nodes which represent points at which decisions are made as to alternative features desired. The number of possible paths through the graph represent the number of possible types of calls available to UNICOM subscribers. The number of possible paths is large enough to make it apparent that the preparation of a separate written description for each identifiable call type is not a feasible undertaking. However, it will be valuable to write descriptions for a few of the basic types which include each of the branches identifying a separate service feature.

## Line Concentrators

A review of the various methods of handling switching and signaling with remote line concentration has been made. Factors such as the size, i.e., number of lines and trunks to be switched, the method of control, the effect on system survivability, the problem of reliability, and the needs of security equipment were considered. Based on this review, a set of specific requirements for a remote line concentrator is being prepared.

Briefly, these requirements call for a concentrator capable of serving up to 32 lines on a group of up to 16 concentrator-to-switching center trunks. The unit will switch digital lines of the 2.55-kbps rate. A maximum of one full duplex facility between the switching center and the concentrator will be used for control purposes. This control facility may or may not be needed, depending upon the method and complexity of the concentrator control. The final method of control will depend

upon the added cost of [illegible] control circuitry at the concentrator versus the cost of an additional secure c[illegible]l facility. For survivability reasons, provisions could be made to automatically switch idle concentrator trunks through to a limited number of principal lines. This will provide direct connections for these lines to the switching center in case of control failure.

A memorandum containing these requirements, along with preliminary concentrator arrangements, has been prepared. At the present time a more detailed study of a specific method of concentrator implementation is under way to determine the advisability of using remote line concentrators with the UNICOM system.

Switching Requirements

Several additional sections have been prepared for the switching center portion of the SEP. These sections represent requirements which had not been determined at the time the original material was assembled.

A section on traffic measuring has been prepared. This section describes switching office requirements for the collection of statistical performance data concerning the traffic offered and handled. These permit the determination of the amount of traffic; traffic flow, load usage of trunk groups, and the like, for active administrative purposes and engineering future facility additions.

In general, the central processor will collect and store the details of the various measured traffic items. The traffic information will be produced as printed outputs by one of the appropriate following methods.

(1) On demand by special supervisory console control keys

(2) At periodic intervals under control of the central processor

(3) On an off-line basis from data stored on magnetic tape.

The more important items to be collected will consist of call counts of the following:

Total originating messages and calls completed

Total originating attempts

Total through-switching attempts (interoffice trunk to interoffice trunk)

Trunk group call and overflow counts

Count of no-circuit overflows

S/F total messages

S/F total attempts

Call count of preamble check failures

Call count of calls affected by Category I pre-emption.

Magnetic tape output records for use in off-line processing for automatic message accounting or for allocation of costs will be provided. These records will include the items listed in Section 1 under User Needs, Recording of Accounting Information.

The supervisory console requirements section of the SEP has been revised to reflect recent systems engineering work and development effort. The new concept separates the requirements for local supervisory control from those of the over-all system supervisory control as described in Section 2 under System Control. The local control portion will include the display and control functions necessary for the control of the local switching center and the trunk groups radiating from that switching center. Status information on traffic load conditions will also be displayed or printed out at this position. In addition, facilities will be provided to introduce program changes such as line load control and alternate routing modifications.

The over-all system control functions will be provided for certain UNICOM offices which will be able to act as regional control offices. Although a separate console may be necessary in a few centers, it is presently recommended that an additional area on the local supervisory console position or a build-out of this position be utilized to provide over-all system supervisory functions. Information will be transmitted to the regional control offices on request or on a periodic basis to provide the load status and working condition of all local switching centers and trunk links within the regional area. Within any one regional area, several centers may have regional system control capabilities. This will be necessary for reasons of survivability should a normally designated center no longer be in operating condition.

Interconnection with Other Systems

The problem of interconnections with non-UNICOM communication systems is being investigated. During this period the work has been principally confined to the exchange of traffic between the UNICOM and Switched Circuit Automatic Network (SCAN) systems. Three methods have been considered. These include an operator assistance method, a double dial tone method using exit codes, and a single dial tone method.

The first of these requires all interconnection calls to be routed to an attendant who, in turn, checks the security categories and precedences and can also, if desired, screen calls during periods of traffic overloads. This method of interconnection requires a minimum of equipment for implementation and is simple in operation from the user's point of view. Each of the interconnected systems can have its own independent numbering plan. While the use of the operator assistance method has advantages, especially when the volume of interconnecting traffic is

very low, it becomes unsatisfactory and expensive when large volumes of interconnection traffic require the services of a number of operators.

The full dial operation methods have advantages when traffic volumes are large. Of these methods the double dial tone method is least expensive and most flexible in numbering plan arrangements. The flexibility and equipment simplicity is achieved by requiring the user to key an exit code, following which he again receives dial tone and proceeds to key directly into the connecting system. This method does, however, require a larger number of digits to be dialed and burdens the user with interpreting the differences in call handling capabilities between the networks.

The single dial tone method, which enables the user to dial the full heading of the called line immediately upon receiving dial tone, removes several disadvantages of the double dial tone arrangements by increasing logic requirements in both systems. The single dial tone method will require either the use of exit codes or a common numbering plan for all interconnected systems. Of these two methods, the use of exit codes is preferred since a common numbering plan will make it necessary for the user to dial a greater number of digits on all calls and will complicate the administration of directory number assignments and changes.

Since the traffic requirements for interconnecting traffic are not available at this time, no final decision as to the optimum method can be reached. Current plans for the Test Model call for the traffic attendant to handle interconnection traffic as indicated by the first method described here.

A section describing the requirements for interconnection is being prepared for inclusion in the SEP. It will be available early in the eleventh quarter.

## SWITCHING MATRICES

The space-division switching matrix now being developed for UNICOM has been previously described.[1] It is referred to as a single-sided, four-stage folded matrix and is composed of 8-by-8 switches using four-wire ferreed crosspoints. All lines, trunks, and other terminations are wired to one side of the matrix, and a connection may be established as required between any two of them through eight crosspoints and a wired junctor at the opposite side. This matrix was chosen for implementation in the Test Model because previously existing knowledge in the field of space-division matrix design indicated that it would be an excellent choice to meet UNICOM

[1] J. F. Devereux, "SDS Matrix," UNICOM Progress Report for Seventh and Eighth Quarters, Vol. II, Appendix 8G.

requirements. However, more exact data on the blocking characteristics of this matrix were needed for engineering UNICOM switching centers in Phases II and III.

Analytical methods available today for the determination of blocking characteristics of switching matrices are not powerful enough to yield meaningful results when applied to matrices of this type. Consequently, a new approach to the analysis was required. The method used was a simulation technique using IBM 7090 facilities. The program developed to do this job is a new contribution to the art and will constitute a valuable addition to the technical literature. The program is easy to apply, is very flexible, and is applicable to a wide variety of switching matrix configurations. Because the program was so successful, it was decided to make a minor extension of the original objectives to compare the single-sided, four-stage folded matrix with other matrices to see if some other solution would better suit UNICOM needs. Very little additional effort was required to check the blocking characteristics of a number of other four-stage, three-stage, and two-stage matrices.

One item of future work on the space-division matrix will be the development of guides for detailed engineering of space-division switching matrix equipment for Phases II and III of UNICOM. The number of registers, senders, and so forth, will be determined as a function of switching center size and offered traffic load. Later these results will be used in the detailed engineering of UNICOM switching centers. It is anticipated that the program developed as a part of the work accomplished will find extensive application in the future. One very likely application is in the study of the time-division switching matrix.

## SIGNALING AND SUPERVISION

A study of three plans for signaling on digital lines has recently been completed. As a result of this work, the use of both the message (M) channel and the supervisory (S) channel for signaling between switching centers and digital stations is being contemplated. The three plans that were studied and the reasons for this approach are discussed below.

In the first plan studied, all signaling was confined to the S channel. Information to be transmitted was coded in four-bit groups. Since the four-bit groups permit only 16 signals to be transmitted, the code structure was expanded to take advantage of specified heading sequences and also to use "shift" signals analogous to the "upper-case - lower-case" signals used with teletypewriters. Error protection was provided by transmitting each four-bit character twice, in successive frames.

In the second plan, signaling was also confined to the S channel. However, information to be transmitted was coded in eight-bit groups. Therefore, this plan

required a framing structure which covered twice the interval presently being considered for UNICOM. Error protection was obtained by using one of the eight bits as a parity bit and by "spacing" the useful codes within the 128 that remained so that the probability of misinterpreting codes in the presence of noise was considerably reduced. Since more codes were available, neither sequencing nor shifting were required in this plan.

In the third plan, both the S channel and the M channel were used for signaling. In general, the S channel was used only for supervision and for information that had to be transmitted in the presence of messages. Call heading and other information was transmitted in the M channel. Information was coded in eight-bit characters on the M channel and it was assumed that one of these characters could be transmitted in the eight bits immediately following any subframe pulse. In the S channel, four-bit characters were assumed to be sent twice as in the first plan. Again, neither sequencing nor shifting were required.

Table 3-1 shows a comparison of the three plans. The first part of the table briefly summarizes the plans and shows the number of signals that were provided in each. The extra code required in Plan I in the direction toward the switching office was one of the shift signals referred to previously. In this plan, only four spare codes were available in contrast to the greater numbers shown for Plans II and III. Although modification of Plan I, to provide more shift codes or to permit multiple shifts, might produce a few more spares, the plan as it stands has little room for future expansion. As the table shows, both Plans II and III have considerably more unassigned codes available for future use.

In Table 3-1, station complexity is compared only in relative terms. The figures were derived from estimates of the circuits required in the logic and switching portions of the station auxiliary equipment. Key generators, vocoders, modems, and the like, were not included, nor were the station control sets. Since the figures shown are only estimates, they are subject to error, which might easily overshadow the small differences that are indicated.

At the switching center end, the principal differences among the three plans arise in the S-bit assembler and in the framing circuits. Plans II and III both require modified S-bit assemblers. In addition, Plan II requires a framing structure twice the length of that used in the other plans, and therefore some increase in reframing circuitry is required to maintain reframing intervals of about the same duration as obtained with Plans I and III. The cost differences at the switching center are, of course, diluted in proportion to the number of lines served by the equipment.

Another aspect of comparison among the plans is the speed with which each can transmit a one-digit destination code. As discussed earlier, Plan I uses four

Table 3-1

COMPARISON OF STATION-TO-SWITCHING CENTER DIGITAL SIGNALING PLANS

| | | | Plan I | Plan II | Plan III |
|---|---|---|---|---|---|
| Channels Used for Signaling | | | S Only | S Only | S and M |
| Code format | | | Four bits repeated twice | Eight bits not repeated (includes parity) | Four bits repeated twice on S channel; eight bits (including parity) on M channel |
| Number of codes from station to switching center | Implemented | Required | 45 | 44 | 7 S, 36 M |
| | | Spares | 4 | 10 | 0 S, 10 M |
| | | Total | 49 | 54 | 7 S, 46 M |
| | Additional spares available | | 0 | 73 | 8 S, 81 M |
| Number of codes from switching center to station | Implemented | Required | 31 | 31 | 9 S, 22 M |
| | | Spares | 10 | 10 | 0 S, 10 M |
| | | Total | 41 | 41 | 9 S, 32 M |
| | Additional spares available | | 2 | 86 | 8 S, 95 M |
| Implementation complexity | Relative station complexity | | 1.0 | 1.05 | 1.1 |
| | Switching center | S-bit assemblers and distributors | Four-bit | Eight-bit | Modified and enlarged eight-bit |
| | | Framing | Standard single frame | Double frame | Standard single frame |
| Time to transmit a one-digit code | | Maximum | 160 ms | 214 ms | 10 ms |
| | | Average | 134 ms | 160 ms | 7 ms |
| | | Minimum | 107 ms | 107 ms | 3 ms |

Comments

Plan I Speed relatively slow -- would require buffer stores. Trunks require M-channel signaling anyway.

Plan II Speed relatively slow -- would require buffer stores. Time required to reframe is double Plans I and III. Trunks require M-channel signaling anyway.

Plan III Signaling equipment can be the same for lines and trunks. Ability to signal in M channel very valuable in making maintenance and security checks.

S bits per character and repeats each code. Since there are four S bits in each frame, this means that at least two frame-times are required to transmit a one-digit code. At 2.55 kbps, two frames last 107 ms. However, the user may not press the button just at the beginning of a frame, and it may take as much as a full frame to begin transmission of the digit. This leads to a maximum time of three frames, or 160 ms. On the average, 2-1/2 frame-times, or 134 ms, would be required.

In Plan II, eight S bits are required for each character. Since characters are not repeated, the minimum time for this plan is the same as for Plan I — 107 ms. However, the maximum time is longer, since it may be necessary to wait an additional two frames before the digit can be transmitted. The maximum time would thus correspond to four full frames, or 214 ms. On the average, three frame-times, or 160 ms, will be required.

Plan III is considerably faster than either of the other two. The eight-bit digit codes are sent in the message channel and require only half of a subframe, or about 3 ms, for actual transmission. It may be necessary to wait a full subframe before transmission can begin, however, so that the maximum time to transmit a one-digit code would be 10 ms. On the average, one subframe, or about 7 ms, will be required.

Several recent investigations of subscriber keying performance were studied in an effort to define requirements on signaling speeds. These studies shed some light on speed requirements, and although they are not directly applicable to the UNICOM case, they indicate that about 1 percent of all calls might have consecutive digits dialed in less than 150 ms. On this basis, Plan I is marginal, at best, while Plan II is unacceptable. Plan III has margin to spare.

It would be possible to improve the performance of Plans I and II if sufficient buffer storage were provided at each station to accept the information at the rate it is generated and to transmit it at the rate obtainable with each plan. However, it appears that in the case of Plan II, the cost of extra buffer storage will more than offset the small cost difference between it and Plan III. On this basis, and because it requires the special double frame, consideration of Plan II was discontinued.

Plan III is more desirable than Plan I for the following reasons:

(1) There is a great deal more room for growth in the code structure of Plan III than of Plan I. This is especially important in a new system in which all of the required customer services may not be known until long after the first installations have been made.

(2) Plan III is significantly faster than Plan I. While this is important to the user, it may be even more important to fast automatic machines. In any case, it seems especially desirable to provide more than simply "adequate" speed in a brand new system.

(3) The ability in Plan III to signal in the M channel should be extremely valuable in making maintenance and security checks.

(4) The switching center equipment used for signaling for lines and trunks using Plan III would be similar.

(5) The difference in cost between Plans I and III is negligible.

During this quarter, effort was also applied to signaling on digital trunks. As discussed in the ninth quarterly report, studies indicate that the message channel must be used for digital trunk signaling, on those trunk groups lacking a 1.2-kbps S channel, if the speed-of-service requirement for Category I traffic is to be satisfied. During the ninth quarter, a number of signaling plans using the message channel were examined on the basis of their ability to meet the Category I speed requirement under error-free, non-blocking conditions. Several of the plans were found to be satisfactory. However, the fastest connection set-up time, 1.3 seconds, was found to be obtained when call-wire operation is used; i.e., when one trunk between switching centers is assigned to handling signaling exchanges exclusively. The other methods, all of which involve only part-time use of the message channels of individual trunks (for transmitting and receiving headings), had connection set-up times ranging from 4 to 6 seconds. While the call-wire method was fastest, the full-time allocation of a trunk for this purpose cannot be justified in UNICOM since all traffic estimates to date indicate that such a channel would have very low occupancy.

During the tenth quarter, plans for signaling between switching centers were studied further and the following plan is being recommended for consideration for UNICOM.

(1) Normally, one trunk of a group between switching centers will be set up and designated as the signaling trunk. It will handle all heading transfers between those switching centers and will also carry almost all other inter-switching center signaling. One exception is the transmission of signals used for supervising the individual trunks which will be handled via the individual S channels on the trunks. A trunk set up as a signaling trunk between offices will not be disconnected from the signaling registers until it is the last available trunk in the group and is needed for handling a call. At this time, after handling the signaling pertaining to that call, it will then be used as a normal message facility. The first trunk in the group

to become idle after this occurs will be established as the new signaling trunk between those switching centers. More than one trunk may be assigned to inter-switching center signaling if this is required, as long as it does not interfere with the handling of traffic.

(2) Where a 1.2-kbps S channel exists between switching centers, it will be used as a call-wire to handle all signaling between those switching centers during times that all message channels are busy.

This plan for inter-switching center signaling, in most instances, will have a connection set-up time of 1.3 seconds or less. Furthermore, transmission capacity is not "wasted." In the most critical case, that in which an ROW call encounters all trunks busy at each switching center in a nine-link connection and none of the nine have a 1.2-kbps S channel, a signaling trunk would have to be established using preemption at each switching center. The total connection setup time would be in the 4- to 6-second range referred to earlier. However, even in this highly improbable situation, the speed would be acceptable under good transmission conditions. In the majority of cases the connection set-up time would probably be less than 1.3 seconds.

## CENTRAL PROCESSOR

### Maintenance Guideline

Work was completed during the quarter on an initial issue of a maintenance and reliability guideline for UNICOM. It is well known that maintenance costs of complex electronic equipment operating in the military establishment are high and, in fact, that these costs over a period of years often exceed the original cost of the equipment itself. An objective of the work on maintenance and reliability is to minimize these costs. Although these lower costs may not be observable until the maintenance effort required for the system in actual operation is evaluated, it is necessary that maintenance and reliability considerations influence the design of the Test Model at this time in order that the model be as close to prototype as possible.

UNICOM must be a very reliable and maintainable system and must allow essentially zero down time. The material contained in Appendix 3A furnishes a guideline for reliability and maintainability of UNICOM and presents some desirable objectives in these areas. It contains definitions of reliability, maintainability, system down time, station down time, error, fault as they apply to UNICOM. It presents objectives for reliability, fault detection and diagnosis, and repair time. It points out the various factors to be considered in the design of the switching

center equipment, including equipment design factors, program, design factors, system design factors, and security aspects of maintenance.

Further work on maintenance will be required throughout the contract period to expand this guideline. Major emphasis of the work thus far has been on the maintenance of the switching center equipment. Future work will be expanded in scope to furnish guidelines for other areas such as transmission and station equipment.

## STORE AND FORWARD OPERATION

During the tenth quarter systems engineering effort has been directed primarily toward specifying additional details of the operating requirements for store and forward (S/F) message handling. This detail is needed to guide the preparation of programming specifications for the central processor S/F operations, and to achieve a reasonable design balance between hardware and programs. Some of the requirements which have been established are reported below. These and others will be made a part of the SEP.

### Tape Files

When the drum system approaches capacity, complete messages with the newest filing time and lowest priority will be unloaded from the drum to the overflow tape. When the system is emerging from an overflow condition, messages which were retained on the drum can be sent faster than those which overflowed onto tape because of the time required for tape search. Therefore, it will be desirable to send from the drum first those messages which did not overflow. Meanwhile, the drum will be refilled from overflow tape. Also, old messages should be sent before new ones of the same precedence, as it is undesirable to receive newer messages before the older ones if the text refers to the same subject matter.

Transfer of messages to overflow tape as described above occurs only when the system approaches capacity. In addition, two tape entries are made for each normal store and forward message handled. One of these is the recording of message text on the permanent file tape and the other is the entry on a journal tape of the complete record of how each message was handled. Transfer of messages to permanent file will be made before entry of the transfer record is made on the journal tape. Except on high precedence calls, this transfer is also made before sending the message out on a trunk or line. When the transfer has been made, a time stamp will be entered in the call slot of the call store. The call slot also contains heading information, originating subscriber number, filing time, and message number. Transfer of the call store information to the journal file will be made as

early as practicable in the message processing sequence. For purposes of message retrieval, a label on the tape reel supplemented by a manual index entry specifies the time spanned by that particular reel. Thus a particular reel can be identified. The reel would be placed on an active tape machine and a high-speed forward search made for the message number. Entries in the journal file tape will be made for S/F messages only and an entry will be made only once for each message after delivery to all lines or trunks for which the switching center is responsible. The journal file entry shall contain at least the message heading, the date and time at which the text is stored in the S/F permanent reference file, the UNICOM reference number used to retrieve the text, and Allied Communication Publications (ACP) 127 message channel numbers if they are used.

### Message Blocks

In transferring a message from one S/F unit to another in a different switching center, the originating central processor will signal the number of blocks to be transmitted along with the message heading and other supervisory information. By comparing the intended number of blocks with those actually received or found in error at the receiving S/F unit, the central processor can more readily insure that parts of messages are neither lost nor associated with the wrong message.

The number of repeated attempts that the switching center performs on a message must be limited to prevent excessive repetition from overloading facilities. The limit is stored in the central processor memory and is alterable by local supervisory control procedures. No specific number of attempts has been established, but this will be done as more information on error performance of transmission facilities becomes available.

### Manual Intervention

Requirements for central processor actions to provide administrative printouts are being specified. For example, if a message is not delivered in the time specified in SCL-4083A, it is proposed to print out on the traffic attendant's printer pertinent message data from the message processing (MP) slots. This information will include message identification including reference numbers, originating subscriber identity, and the reason for failure of the most recent attempt to deliver the message automatically. This will allow the action taken by the attendant to be guided by knowledge of the current status of the network, as well as by information regarding the particular message. Examples of such reasons for failure to automatically deliver messages are destination busy and destination on unattended status.

Repeated printouts of this information will occur at designated times for messages that have been left in the storage. The designated times will be stored in the permanent part of the central processor memory and will be alterable by manual control procedures. The central processor is expected to continue its attempt to deliver messages that have timed out in this manner.

The attendant's console will provide a feature that enables the attendant to redirect the message by using the retrieval process to prepare a newly addressed message. He should also be able to cancel the message that cannot be delivered so that the heading is cleared from the call store slots and sent to the journal file.

When an undeliverable message has been printed out for display to an attendant, facilities will be provided to allow new headings to be introduced from the operating console. Messages can thus be rerouted by the operating personnel in accordance with prescribed administrative procedure. When conditions warrant that subsequent messages should also be rerouted, changes can also be made quickly in the routing directory so that unnecessary printouts can be avoided.

To prevent burdening transmission facilities with misdirected messages, heading legality checks will be made prior to transmission of an S/F message. Messages which contain vacant code or non-valid address codes will therefore usually remain in storage at the originating office until correction is made by the traffic attendant with or without the aid of the originating subscriber. Other mismatches, such as those which exceed the security authorization of the originator, will be detected at the originating office.

## Message Traffic Measurements

Traffic measurement data pertinent to the S/F messages have been specified in detail and will be included in Section 5.5.17 of the SEP. The arrangements recommended permit determination of the amount of traffic, traffic flow, grade of service rendered, load usage of trunk groups for active administrative purposes and serve as a basis for engineering of future additions. Traffic measurements requirements are discussed more fully in this section under Switching Requirements and Method of Operation, Line Concentrators and Switching Requirements.

## Teletypewriter Converters

When a 100-word-per-minute teletypewriter is used at a UNICOM station, its output will modulate the 2.4-kbps or the 38.4-kbps signal to the switching center at an average rate of 74.2 bps. For store and forward operation, a converter is required between the time-division switch and the store and forward unit to recognize the start element, and furnish sampling pulses to the store and forward unit. Requirements for the design of these converters have been formulated. They

will accurately convert 74.2-bps signals which have suffered as much as 40 percent distortion. Converters will be arranged so that 2.4-kbps five-unit code printed narrative (PN) stations can exchange messages with 74.2-bps stations via the S/F units.

Store and Forward Traffic Routing

To insure that the central processor memory organization and program structure include provision for tables and programs necessary to route S/F traffic in a manner which may be different from that used for direct traffic, some principles of S/F traffic routing have been established.

Substantial differences will exist between the Test Model and field installation in regard to routing procedures. These differences are largely due to the fact that routing in a single switching center must be simulated by assigning different office identities to various terminals in the same physical office. This will require looping back of transmission facilities. The exact routing rules utilized at a particular center will depend largely on the environment of that center. Therefore, general principles must be set down which will allow programming effort to proceed and which will still be flexible enough to cover the variations we can reasonably expect to meet in the field installation. It is desirable that the Test Model be able to demonstrate the handling of S/F calls with up to five addresses by the following three methods:

(1) Simultaneous seizure of five stations

(2) Automatic conversion to five single address messages

(3) Extraction of two or three local addresses for handling by method (1) or (2) and forwarding the remainder to other S/F units.

The use of one or all of these methods at a field installation will depend upon the position of the switching center in the network, the facility layout serving the switching center in terms of geographical distribution of subscribers and other switching centers, and the nature of the message as to priority, destination, and mode. In addition, a method of intermixing direct and S/F calls on the same trunks will be used.

One of the principles which should guide the formulation of specific routing rules for a given switching center is the avoidance of extensive use of tandem storage in view of economic and operational penalties in the amount of storage required and in switching time. Low precedence messages, however, should be tandem stored where necessary in order to concentrate the load in a larger switching center where high-speed facilities are available and the S/F traffic is intermixed with direct traffic over these facilities. This will lead to an increase in the efficiency

of the trunk groups and will reduce the relative percentage of time occupied by switching and signaling functions. The general rule for higher precedence traffic is that speed of service is paramount and a message should be advanced as far as possible through the network with the minimum tandem storage on the first attempt.

By definition, S/F messages will be handled on, and engineered for, a delay basis. Therefore, they should be restricted to a single primary route with one or more emergency alternates. One of the functions of the system supervisor will be to make routing changes of this nature. In locations where trunk layout is severely limited, it will be necessary to allow S/F Categories I and II calls to automatically alternate route in order to meet speed of service objectives.

## PROGRAM FOR THE NEXT INTERVAL

Work planned in the switching and signaling area during the eleventh quarter includes the following items. The output of this work will be primarily in the form of revisions to the SEP.

(1) Continuation of the detailing of the method of operation for various types of calls

(2) Further detailing of the design of a digital line concentrator applicable to UNICOM

(3) Specification of additional switching and signaling requirements and methods for interconnecting between UNICOM and other systems

(4) Further definition of requirements for automatic restoral of allocated circuits

(5) Completion of the analysis of the traffic handling capability of the space-division matrix

(6) Appraisal of the traffic handling capabilities of the time-division switch

(7) Resolution of the method for switching and multiplexing 652.8-kbps data in the switching center and of multiplexing 40.8 and 2.55 kbps

(8) Resolution of the requirements for and methods of signaling on analog lines and trunks

(9) Investigation of methods for digital signaling over degraded transmission facilities

(10) Continuation of maintenance and reliability planning to include the role of the central processor in the test and maintenance of circuits which connect to it

(11) Determination of the requirements for communicating between central processors in different switching centers in carrying out service channel functions

(12) Evaluation of various methods for exchanging information between the S/F modules and the central processor

(13) Analysis of the security features and capabilities of the S/F units

(14) Specification of the requirements for message block identification on interchanges of S/F messages between switching centers.

# SECTION 4
# TRANSMISSION AND STATIONS

Progress on the transmission subsystem is reported in the following categories: transmission engineering, transmission facilities, and digital signal converters. A discussion of station engineering is covered under digital stations, analog stations, and ancillary devices.

## TRANSMISSION ENGINEERING

### Digital Lines

Work has continued on the problem of transmitting 2.55 kbps over long trunks which include land lines and 3-kc submarine cable channels. Delay and attenuation distortions of submarine cable channel filters have been measured. Based on these measurements, a 10 to 1 reduction in delay distortion is required on the submarine cable link of a combined land-line -- submarine-cable trunk with the carrier at 1912.5 cps. With the carrier shifted to 1700 cps, only a 5 to 1 reduction is needed on the submarine cable link. The latter is to be preferred because design of a prescription equalizer to give a 10 to 1 reduction is complicated by variations from channel to channel in characteristics.

### Interconnection to Other Systems

Transmission aspects of interconnection between UNICOM and Switched Circuit Automatic Network (SCAN) have been considered. These are straightforward for voice, teletypewriter, and analog signals. Consideration is now being given to other modes of transmission such as data and vocoder speech signals which may require interconnection between SCAN and UNICOM. This will assist in the solution of problems of interconnection with other military networks. A problem with vocoders operated from voice signals supplied by interconnecting systems is mentioned under vocoders in the discussion of Digital Signal Converters.

## TRANSMISSION FACILITIES

### Modulation Studies

The expected performance of the four-phase, single-carrier data modem chosen for use in the Test Model has been examined in the presence of envelope

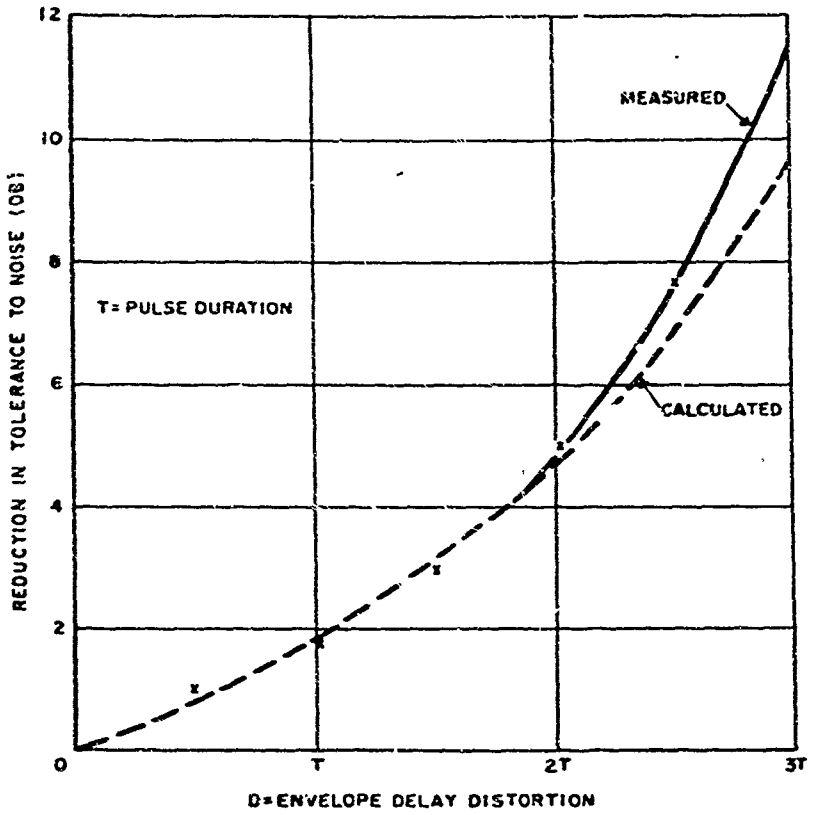


Figure 4-1. Four-Phase Data Modem Performance in Presence of Delay Distortion

delay distortion. Experimental measurements and theoretical calculations have been made. The results are shown in Figure 4-1. The reduction in tolerance to noise is a measure of the required increase in signal in the presence of envelope delay distortion to retain the same error rate as that which occurs with no delay distortion.

The measurements and calculations are based on a parabolic curve of envelope delay versus frequency with a minimum delay at the carrier frequency $f_c$ and delay distortion D at frequencies of $f_c \pm p$, where p is the pulse rate or one half the bit rate. The calculations assume a raised cosine pulse spectrum at the data modem demodulator input, with maximum energy at $f_c$ and zero energy at $f_c \pm p$.

The measured and calculated results agree closely, and show appreciably more delay tolerance than that reported for four-phase modulation in the Test Model System Engineering Plan of 31 October 1960. With delay distortion at the edge of the band equal to twice the pulse duration, the present estimate of the reduction in

tolerance to noise is 4.8 db, compared with 9.4 db previously reported. The difference is partly attributed to a revision in calculations and partly to a small superiority of performance in the method of modulation, which utilizes phase shifts of ±45° and ±135° (presently assumed), instead of 0, ±90°, and 180° (on which the 9.4-db figure was based).

Digital Lines

Some results have been obtained from a program of calculations of performance of the 2.55-kbps, four-phase differential detection data modem in the presence of delay and amplitude distortion. The assumed delay characteristics are based on two modifications of a line characteristic offered by the Bell System, Schedule 4C, as shown in Table 4-1.

Table 4-1

MODIFIED 4C DELAY CHARACTERISTICS

| Delay Relative to Minimum (μsec) | Frequency Band (cps) | | |
|---|---|---|---|
| | Schedule 4C (for reference only) | Characteristic A* | Characteristic B† |
| <300 | 1000-2600 | 1200-2600 | 1200-2450 |
| <500 | 800-2800 | 1000-2800 | 1000-2650 |
| <750 | - | 900-2900 | 900-2750 |
| <1500 | 600-3000 | 800-3000 | 800-2850 |

*Characteristic A is Schedule 4C modified to be 200 cps more lenient (less bandwidth) at the low end.

†Characteristic B is characteristic A further modified to be 150 cps more lenient at the high end.

The results are stated in terms of reduction in noise margin relative to the performance over a line with a flat amplitude response and with delay distortion less than 100 microseconds, both over a band 2.55 kbps wide centered about the carrier frequency 1912.5 cps.

With flat delay distortion (less than 100 microseconds) the reduction in tolerance to noise varies from 0 db to 1 db as the flat (loss) band is narrowed from a width of 2550 cps to 1700 cps.

With delay distortion characteristic A, the noise margin impairment increases from 1.5 db to 3.5 db for flat amplitude response over bands from 2550 cps down to 1400 cps in width. Similar computations were not made for delay distortion characteristic B.

The above results were obtained with flat amplitude response. When, however, an amplitude response which contains a 4-db ripple over the band from 500 to 3000 cps is combined with delay distortion, the reductions in tolerance to noise are 2, 4, and 8 db for flat, A, and B delay characteristics, respectively.

Similarly, an amplitude response with 1 db slope from 850 to 3000 cps gives noise penalties of 1.5, 3, and 6 db, respectively, for flat, A, and B delay characteristics.

The results to date indicate that is important to minimize ripple and slope in the loss characteristic, particularly in the presence of poor delay characteristics. However, while these latter results are pessimistic, the computations of the effect of narrowing the band when the amplitude variations are small hold out the hope that narrowing the response band may make it possible to restrict the band over which delay distortion is critical.

Tropospheric Scatter Radio

The effect of aircraft flying through a tropospheric scatter radio beam has been studied in considerable detail. Calculations have been made for an assumed aircraft at various altitudes and for troposcatter systems of two lengths, using frequencies of 2 kmc and 4 kmc, and antenna diameters of 10, 15, and 20 feet. There has been some concern that a properly situated aircraft could create a transmission path of less loss than the tropo path and sufficiently different in delay to cause loss of synchronization of UNICOM digital transmission when a transition is made from one path to another.

An aircraft provides a transmission path by two modes: specular reflection and scattering. The ratios of received signal power for each of these modes to the signal received over the troposcatter path are plotted versus aircraft height in Figures 4-2 and 4-3, for assumed radio frequencies of 2 kmc and 4 kmc. The path length is assumed to be 100 miles and the antenna diameter 15 feet. The aircraft is assumed to be directly above the line from transmitter to receiver and to be flying horizontally across the tropo beam. The delay of the aircraft transmission path relative to the tropo path is also plotted.

At 652.8 kbps the pulse duration is 1.53 microseconds; thus a change in transmission time of 0.5 microsecond, caused by the aircraft path taking control from the tropo path, may cause loss of synchronization of the UNICOM digital transmission. This relative delay exists when a plane is at an altitude of 10,000 feet in the examples assumed. At this altitude, with a radio frequency of 2 kmc, the reflected path signal is 16 db below the tropo signal and the scattered path signal is 36 db down. At 4 kmc the corresponding numbers are 30 db and 55 db. A reduction in the

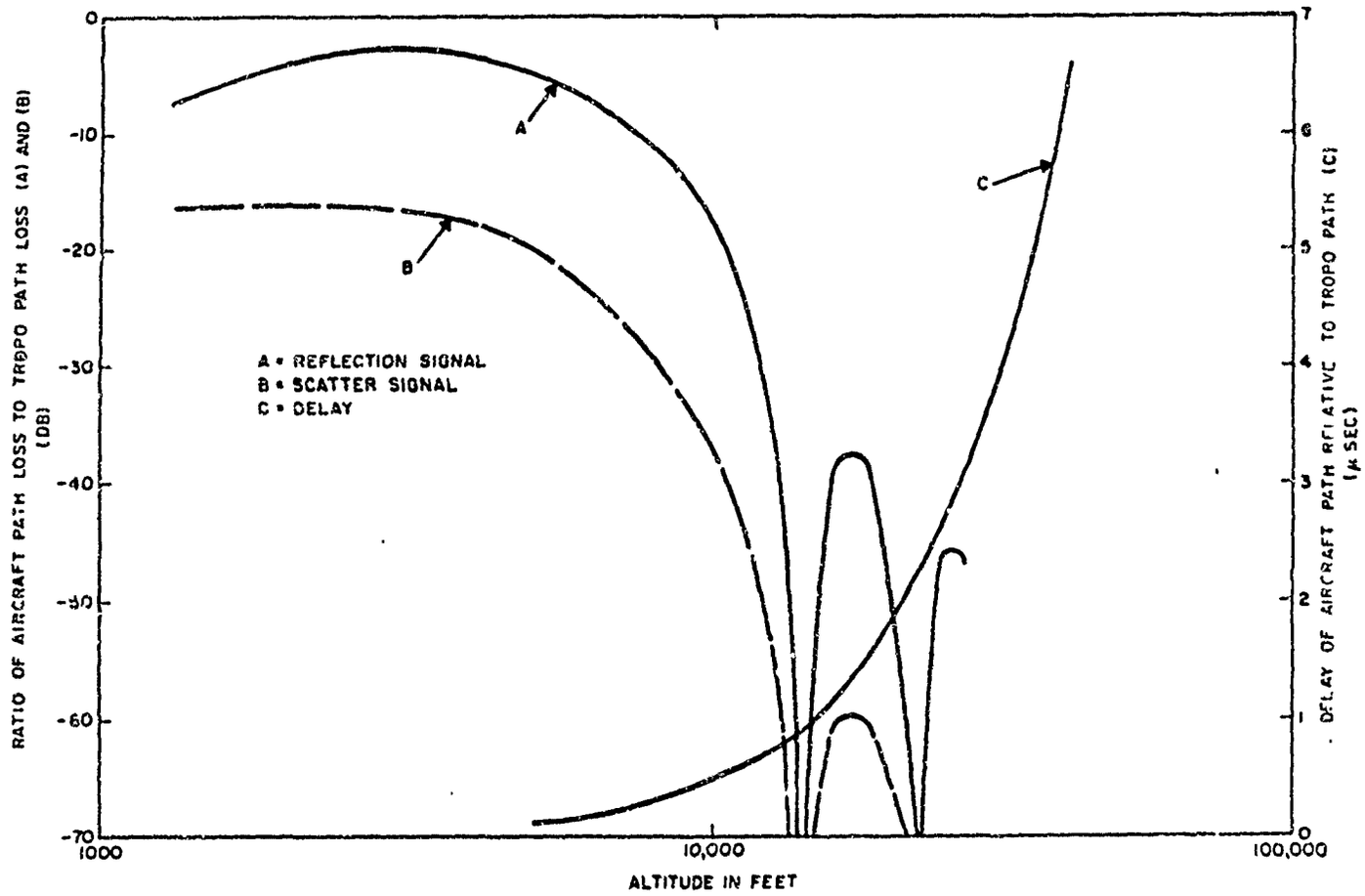


Figure 4-2. Aircraft Interference in Tropo System, with 15-Foot Antenna, 100-Mile Path, and 2-kmc Frequency

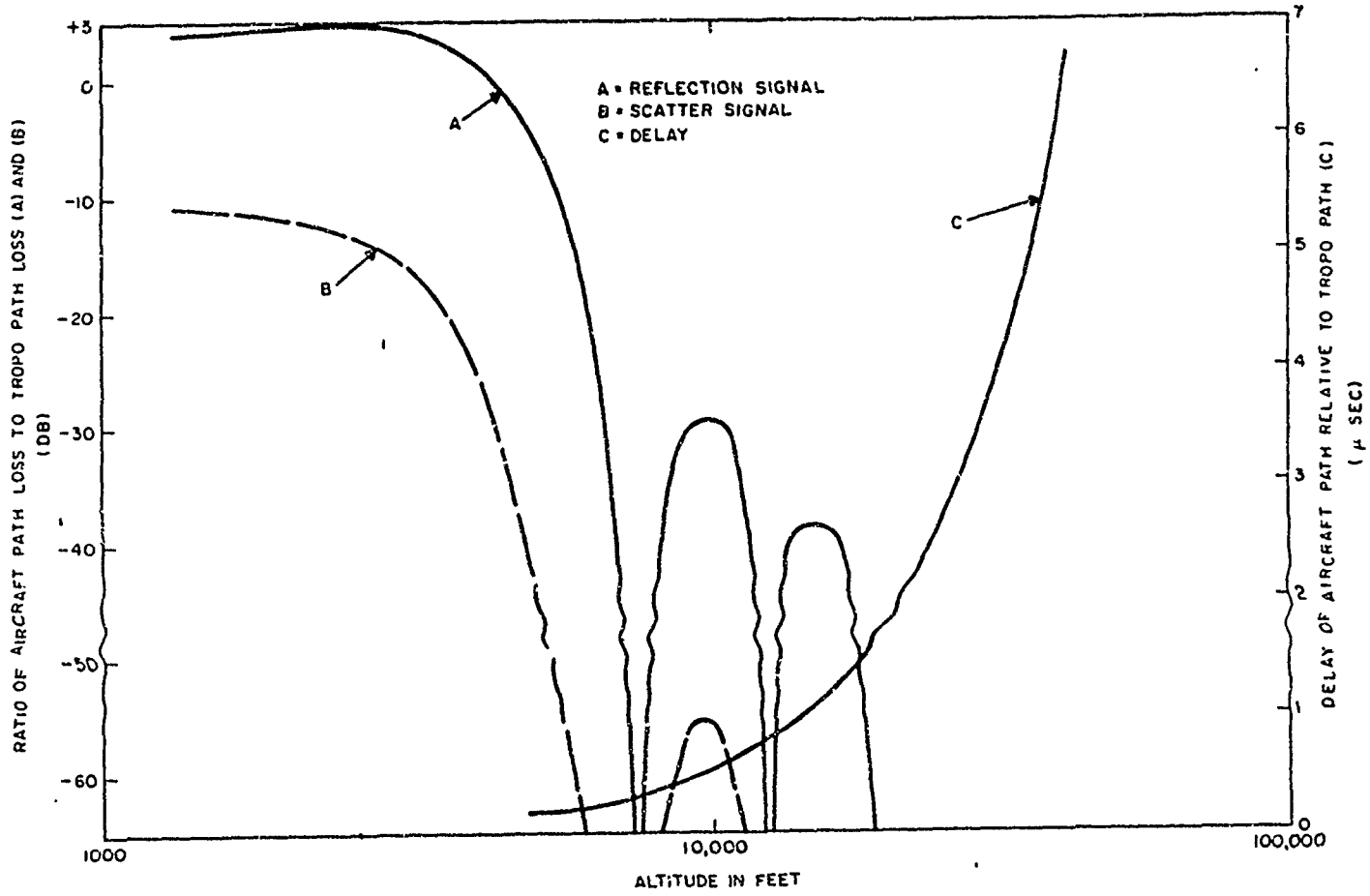


Figure 4-3. Aircraft Interference in Tropo System, with 15-Foot Antenna, 100-Mile Path, and 4-kmc Frequency

tropo signal of 40 db at 2 kmc as a result of fading and seasonal variation in loss would allow either aircraft path to dominate and cause loss of synchronization.

However, such a combination of circumstances is unlikely to occur very often. Results for other values of the parameters are comparable. Thus the calculations reveal that UNICOM transmission at 652.8 kbps will lose synchronization for this reason very infrequently.

Data Test Analysis

Analysis of test results of an AT&T-IBM data transmission program at 2 kbps has just been started, and a report will be issued in the next quarter. The tests used a four-phase modem with a design similar to that planned for the Test Model. Data were transmitted over a commercial circuit about 3000 miles long.

HF Radio

Work has been started by a subcontractor on a study of the use of HF radio circuits by UNICOM. The study will explore the feasibility of UNICOM transmission at 2.55 kbps over world-wide HF circuits, and will evaluate the reliability of such transmission. Problems will be enumerated, solutions considered, and estimates made of capabilities of existing equipments to solve the problems. Techniques to combat jamming will be considered. The study will culminate in recommendations for implementation and tests.

Variations in Delay of Transmission Media

A limited amount of data on changes in absolute delay on carrier and microwave circuits was obtained during this quarter. The principal amount of this was for TH and TD2 microwave systems. Such data are needed for the design of time buffers in digital terminating units. Delay changes fall into two categories: very small changes ( in the order of 50 microseconds) caused by temperature and diurnal effects, and very large changes (in the order of 2 milliseconds) on circuits controlled by automatic switching which causes different routes of varying lengths to be selected. Such switching occurs on the New-York-to-London circuits.

Digital Terminating Units

Detailed systems engineering specifications of the digital terminating units have been completed and have been issued in the System Engineering Plan (SEP).

The three types of units are:

(1) The digital terminating unit associated with switching-center-to-switching-center trunks handling nonmultiplexed traffic or multiplex traffic in which 16 channels of 2.55 kbps are multiplexed within the switching center

tropo signal of 40 db at 2 kmc as a result of fading and seasonal variation in loss would allow either aircraft path to dominate and cause loss of synchronization.

However, such a combination of circumstances is unlikely to occur very often. Results for other values of the parameters are comparable. Thus the calculations reveal that UNICOM transmission at 652.8 kbps will lose synchronization for this reason very infrequently.

### Data Test Analysis

Analysis of test results of an AT&T-IBM data transmission program at 2 kbps has just been started, and a report will be issued in the next quarter. The tests used a four-phase modem with a design similar to that planned for the Test Model. Data were transmitted over a commercial circuit about 3000 miles long.

### HF Radio

Work has been started by a subcontractor on a study of the use of HF radio circuits by UNICOM. The study will explore the feasibility of UNICOM transmission at 2.55 kbps over world-wide HF circuits, and will evaluate the reliability of such transmission. Problems will be enumerated, solutions considered, and estimates made of capabilities of existing equipments to solve the problems. Techniques to combat jamming will be considered. The study will culminate in recommendations for implementation and tests.

### Variations in Delay of Transmission Media

A limited amount of data on changes in absolute delay on carrier and microwave circuits was obtained during this quarter. The principal amount of this was for TH and TD2 microwave systems. Such data are needed for the design of time buffers in digital terminating units. Delay changes fall into two categories: very small changes ( in the order of 50 microseconds) caused by temperature and diurnal effects, and very large changes (in the order of 2 milliseconds) on circuits controlled by automatic switching which causes different routes of varying lengths to be selected. Such switching occurs on the New-York-to-London circuits.

### Digital Terminating Units

Detailed systems engineering specifications of the digital terminating units have been completed and have been issued in the System Engineering Plan (SEP).

The three types of units are:

(1) The digital terminating unit associated with switching-center-to-switching-center trunks handling nonmultiplexed traffic or multiplex traffic in which 16 channels of 2.55 kbps are multiplexed within the switching center

(2) The digital terminating unit associated with the switching center termination of subscriber lines

(3) The digital terminating unit associated with the subscriber's station equipment.

The options provided within these units are:

(1) Operational capability with any selected transmission bit rate between 79 bps and 40.8 kbps for any of the units or at 652.8 kbps. The bit rates without graceful degradation will be 2.55 kbps, 40.8 kbps, or 652.8 kbps. With degradation, it is expected that these bit rates might be reduced by factors of 2, 4, 8, 16, 32, ....

(2) Operation with security equipment.

(3) Operation with rate buffers of either of two capacities, one having a capacity of about 25 bits for nonsatellite trunks or lines and the other having a much larger capacity, unspecified at present, for satellite trunks or lines.

(4) Indication of abnormal operation of the modems or digital terminating units, decryption failures, and transmission errors as detected by parity error checks.

## DIGITAL SIGNAL CONVERTERS

### Log-Differential Pulse-Code Modulation

The study of the problem of synchronizing between transmitting and receiving pulse-code modulation (PCM) converters has been completed during this period. It is reported in detail in Appendix 4A of this report. The general conclusion reached is that the method proposed will give very rapid synchronization even during the presence of speech.

The study by computer simulation of transmission of facsimile by differential coding has yielded preliminary conclusions. These indicate that such a method should be feasible with the log-differential coder if removal of the effect of transmission errors within one facsimile scan line is acceptable. If not, and if removal of such errors is required within a few picture elements, then a change from the log scale to a more nearly linear scale appears necessary. Completion of this work and a report on results is expected during the eleventh quarter.

### Vocoder

The experimental study to determine the feasibility of operating vocoders from standard telephone circuits has been continued. The emphasis during this period has been on the investigation of the simpler methods which are based on detection

and measurement of the fundamental envelope wave. It is concluded that although these methods result in adequate intelligibility, the vocoder voice quality will be impaired. Work has now begun to investigate and compare more complex methods, in particular one based on harmonic identification. A completed report on this work is expected to be available at the end of the eleventh quarter.

### Facsimile

In connection with the plan for transmitting facsimile at 2.4 and 38.4 kbps, described under the paragraph on Station Engineering and in Appendix 4B of this report, a brief study was made of the implications with respect to the standard PCM transmission as originally proposed for the Test Model. The conclusions are that the same general principles will be carried over to the new rates. Furthermore, if black-and-white transmission by either one or two digits per sample is found to be desirable, the same basic PCM equipment with modification or suitable optional arrangements can be used. If two-digit samples are necessary, the word synchronization can be based on the same principle as assumed for six-bit words. If one-digit samples suffice, there is no word-synchronization problem.

## STATION ENGINEERING

### Digital Station Engineering

Systems engineering specifications for three types of subscriber control sets, and the associated station logic unit have been revised as required by the latest view of user-need requirements. The revised specifications of the station logic unit and of the subscriber control set will be issued as a revision of the draft SEP in the eleventh quarter.

The three types of subscriber control sets provided are:

(1) Subscriber set for telephone service only with and without secretarial service

(2) Subscriber set for ancillary devices with keyed heading operation (that is, operation of keys on the subscriber set to supply heading information)

(3) Subscriber set for ancillary devices without keyed heading operation (that is, all or most of the heading information contained within the message).

The features provided within these subscriber sets or associated station logic units are:

(1) Operation with one to ten ancillary devices, some of which may be telephone sets. A subscriber control set will be used to control each ancillary device but one control set may serve as many as four ancillary devices.

(2) Operation whereby if a vocoder or a PCM converter is required for the call it will be switched in when the connection is established and held until completion of the call.

Ancillary Device Engineering

The two types of ancillary equipments under active consideration at present are high-speed teletypewriter equipment and facsimile terminals.

A revised plan has been completed for application of facsimile in the UNICOM system. The plan includes terminals operating at 2.4- and 38.4-kbps rates, but none at 9.6 kbps. It is described in more detail in Appendix 4B. Briefly, this plan includes the possibility of connection to analog facsimile, the transmission of essentially black-and-white material at increased speeds, and the transmission of signals from types of facsimile units other than the modified AN/GXC-4 selected for the Test Model.

A study of the best techniques to be utilized for transmission of essentially black-and-white facsimile material has been continued. These include the possible use of clamping on the background amplitude and signal-element stretching for narrow picture elements. Testing of these principles is expected to be carried out in the eleventh quarter.

## PROGRAM FOR THE NEXT INTERVAL

Work planned for the transmission subsystem for the eleventh quarter includes the following items:

(1) Continued study, including computer calculations, resulting in specific recommendations for methods of transmitting at 2.55 kbps over combined land-line — submarine-cable trunks

(2) Determination of the specific features and arrangements required to support communication modes upon clarification of the modes required for interconnections between UNICOM and other systems

(3) Study of delay and amplitude equalization of military communication facilities, and consideration of need for frequency-translating circuits

(4) Continued calculations of performance of the 2.55-kbps, four-phase modem in the presence of delay and amplitude distortion, with the objective of arriving at minimum facility specifications for 2.55-kbps and 40.8-kbps transmission

(5) Completion of a detailed report on the effect of delay distortion on the performance of the four-phase modem with narrowing of the amplitude response frequency band

(6) Completion of a detailed report on a theoretical study of possible interference to UNICOM digital transmission over tropospheric scatter radio systems from aircraft flying through their beam

(7) Completion of the analysis of the BTL-IBM 2.0-kbps transmission tests, and continuation of monitoring of other data transmission test programs which are of interest to UNICOM

(8) Continuation of monitoring and reporting on the progress of the HF study

(9) Continued engineering of digital terminating units to determine the requirements and desirability of other features such as:
   (a) Features specifically provided for fixed delay subscriber lines
   (b) Features required for degraded operation
   (c) Features required for multiplexing on a 652.8-kbps transmission facility
   (d) Features required for transmitting abnormal or trouble condition indications associated with the receive side of the station equipment to the switching office

(10) Completion of and reporting on experimental studies by computer simulation on facsimile transmission by differential PCM

(11) Completion of and reporting on experimental studies by computer simulation of the use of different compression ratios and of frequency equalization for speech transmission by log-differential PCM

(12) Study of vocoder operation at lowered bit rates

(13) Study of possible conferencing arrangements for vocoders

(14) Continuation of the study of vocoder pitch extraction when the vocoder is connected to standard telephone instruments and lines.

Station engineering work planned for the eleventh quarter includes the following:

(1) Issue a revised specification of the subscriber control set system requirements

(2) Continue work to determine the physical features and layout of the subscriber control set lamp displays, key buttons, and audible tones where these affect the human engineering aspects

(3) Start work to determine the engineering features required for subscriber sets with new user requirements such as multimode operation, hold operation, and conference operation

(4) Start work to determine the engineering features required for degraded operation

(5) Start work to determine the simplified station logic unit when associated with very short subscriber lines (that is, a few hundred feet), and when located in the same secure area as the switching center

(6) Start work to specify the sequence of operations for various ancillary devices

(7) Issue a preliminary engineering plan for the analog station and start work on the detailed system engineering specifications of the analog station

(8) Continue work on the specification of requirements for the high-speed teletypewriter equipment

(9) Study problems relating to black-and-white facsimile transmission, including the testing of the basis for digitizing the signals.

# SECTION 5
# SYSTEM TESTS AND SYSTEM STANDARDS

During the tenth quarter, effort in this area has been directed toward (1) early work on the Test Model test plan, (2) preparatory work on certain transmission subsystem engineering tests to be initiated before the Test Model is completed, and (3) two tasks involving preparation of military communication system standards.

## TEST MODEL TEST PLAN

The Test Model test plan will describe the program of over-all Test Model system evaluation tests to be performed during the latter part of 1963 after installation and subsystem testing. The plan is to be completed at the end of 1962. As stated in the Progress Report for the Ninth Quarter, the objectives have been defined, a test plan outline has been written, and the principal operating modes and service conditions have been listed. Emphasis is being placed on test objectives and procedures that will help to evaluate the over-all performance of the complete system.

## TRANSMISSION SUBSYSTEM ENGINEERING TESTS (PRE-TEST MODEL)

System engineering tests will be initiated during the period before the Test Model is available where such tests are helpful in reaching systems planning decisions. For example, certain tests are desirable to give early demonstrations of feasibility and others to produce quantitative information needed about the performance parameters of UNICOM equipments and line facilities.

The tests now planned deal with the transmission subsystems. It is expected that tests of user reactions to station arrangements will be planned later, as mentioned in Section 1. The transmission tests have the general objectives of (1) evaluating UNICOM signal processing techniques, and (2) measuring and defining the performance of UNICOM digital terminal equipments as units and in conjunction with existing types of telephone lines. The following five test areas and the corresponding test objectives have been defined:

(1) 40.8-kbps digital transmission tests

(2) 2.55-kbps digital transmission tests

(3) Facsimile experiments

(4) Vocoded speech tests

(5) Log-differential encoding tests.

Early planning or experimental effort has been directed toward each of these areas. The effort will continue and, in some cases, extend into the Test Model test period. In addition to the areas listed above, transmission tests at 652.8 kbps are desirable and consideration has been given to possible test arrangements, including the use of an AN/GRC-66 tropospheric scatter radio link.

Digital Transmission Tests

The primary objectives of the digital transmission tests are to gain as much information as practical on the following:

(1) Modem characterization; i.e., determine performance in the presence of simulated interference and distortion; for example, the error rate as a function of signal-to-random-noise ratio

(2) Order of magnitude of the error rate of data transmitted over real transmission facilities

(3) Distributions of both burst lengths and error-free intervals for data transmitted over real transmission facilities

(4) Order of magnitude of envelope delay and attenuation distortion that can be expected after prescription equalization of multilink combinations of different facilities.

Data of this nature will be taken over Test Model transmission facilities. In the case of 40.8 kbps, additional tests will be made over a yet undetermined limited number of additional commercial facilities chosen to meet objectives (2) through (4) above.

During the tenth quarter, effort in the data transmission test area was directed to developing the first steps in four-phase data model characterization, to planning for error recording and data reducing implementation, to procuring commercial line facilities, and to planning for the AN/GRC-66 tropo radio installation.

The first step taken in connection with four-phase modems was to borrow a 2.4-kbps Bell System four-phase modem, which is currently being modified to approximate the timing recovery scheme that the Test Model modem design will include. This modified equipment will be characterized during the next quarter. The

characterization of final UNICOM designs will, of course, have to await delivery of the first models. Tests are tentatively scheduled for the third quarter of 1962.

Planning for error recording and data reduction will culminate during the eleventh quarter in a decision as to the extent of error instrumentation to be implemented. As reported for the ninth quarter, the present arrangements only provide for recording errors at intervals of 0.2 second. The primary objective of the study is to compare the cost of (1) utilizing a special or general purpose computer for data reduction and associated real-time bit-by-bit error recording instrumentation, with the cost of (2) implementing special purpose equipment that would reduce the test data as it is obtained. In (2), the equipment might automatically provide burst-length distribution in bar graph form. Clearly, (1) is more flexible because all errors are recorded in their real time occurrence and a permanent record of the detailed test results is obtained. However, it may not be practical to record data on a bit-by-bit basis at the higher bit rates. In any event, in addition to this fine-grain error recording, it is presently planned that all tests over live transmission facilities will include the following:

(1) Measurement of the envelope delay and attenuation characteristics (versus frequency)

(2) Measurement of noise power

(3) Recording of the received signal level including reflection of transmission dropouts

(4) Recording of errors at intervals of 0.2 second

(5) A repetition of (4) for the transmission mode provided for degraded operation, possibly with circuit equalizers removed

(6) A repetition of (4) and (5) for short test intervals where the transmitted signal level is reduced by 6 db.

In connection with commercial line facilities for tests at 40.8 kbps, both during and prior to the Test Model System test period, the following conclusions have been reached:

(1) Leased facilities can be obtained in time to permit transmission tests as soon as modems become available, in advance of the Test Model system test period

(2) Envelope delay and attenuation equalization can be provided as part of the leased facilities

(3) The facilities provided will accept signals modulated on a 30.6-kc carrier.

### Facsimile Tests

Two areas of facsimile testing are planned. First, an evaluation will be made of the use of one-bit or two-bit encoding for the transmission of black-and-white information, in order to help evaluate alternate proposals for facsimile transmission as described in Section 4. Second, an evaluation will be made of the use of four-bit, log-differential encoding for the facsimile transmission. The primary objective in both cases is to disclose inherent problems that may exist and to determine their solutions. Thus far, a pair of AN/TXC-1 facsimile sets have been set up in the laboratory to evaluate one-bit or two-bit coding of black and white. Circuitry has been designed and partially implemented to demonstrate one-bit coding.

### Vocoded Speech Tests

Present plans for vocoded speech tests include demonstrations and trial usage, limited subjective tests, and experimental transmissions over standard telephone instrument loops. The tests will provide (1) some measure of the acceptability of vocoded speech, and (2) information bearing on the matter of analog-to-digital speech interconnections where an inherent problem arises because vocoding action requires low-frequency speech components not passed by standard telephone instruments and telephone lines.

Thus far, a demonstration facility has been designed and partially constructed. The facility will include provisions for an input either from one talker (through a vocoder or direct) or from a recorded tape. Outputs will be provided for up to six listeners. The facility will also be used in connection with the program of subjective tests. Later, arrangements will be made to provide for two-way vocoded conversations.

### Log-Differential Encoding of Speech

Present plans for tests of log-differential encoding include tests and demonstrations of the synchronizing or framing technique. The primary objective is to verify the acceptability of the coder implementation.

## COMMUNICATION SYSTEM STANDARDS

### MIL-188 System Standards Revision

Assistance to the MIL-188 Review Committee continued during the tenth quarter. A complete outline for Chapter 3, covering global communication systems, prepared in part by Bell Telephone Laboratories and in part by ITT Communication Systems Company (ITTCS), was distributed to the committee members after review

and concurrence by the two companies. Bell Laboratories material has been completed in first draft form for Sections 3.1 and 3.3 but has not yet been reviewed outside the Laboratories. Section 3.2 is the responsibility of ITTCS.

DCA Switching Standards

Work was begun during the tenth quarter on a new UNICOM project task. The task comprises the writing of a set of interim engineering and installation (E&I) standards for electronic switching centers, to apply during the time interval 1965-70. The standards are being written for the Defense Communications Agency (DCA) under the guidance of USASRDL. The standards are to be completed in January 1962.

In the document being prepared, standards are presented to specify the capabilities and functions required of switching centers being developed for installation as part of the Defense Communications System (DCS) during the above time interval. The document also deals with the interface characteristics required of the switching centers in order to permit interconnections with the principal special purpose military communication systems that will be operating during the time period.

## PROGRAM FOR THE NEXT INTERVAL

### Test Model Test Plan

During the eleventh quarter, a preliminary draft of a Test Model test program will be completed. The draft will include a listing of the real transmission facilities to be used.

### Transmission Subsystem Engineering Tests

During the eleventh quarter, a recommendation will be made as to the instrumentation that should be provided for data transmission error measurements. Laboratory characterization tests on the modified Bell System 2.4-kbps data modem will be undertaken. Requirements will be stated for leased line facilities desired for data transmission testing in advance of the Test Model system test period, and such tests will be scheduled.

The work on facsimile encoding will continue in the next quarter. Some results of the one-bit encoding of black-and-white information will be available.

Effort on the vocoded speech demonstration facility will continue. The facility will be available during the eleventh quarter for use with recorded tape inputs.

Work will continue toward completion of plans and procurement arrangements for both commercial and military transmission facilities desired for the pre-Test Model and Test Model test periods.

System Standards

During the eleventh quarter, the MIL-188 draft material prepared by Bell Telephone Laboratories will be reviewed and coordinated with ITTCS and with USASRDL. The draft should be available in revised form for distribution to the Government Review Committee by the end of the period.

The DCA switching E&I standards will be completed and sent to the Signal Corps for delivery to DCA by 31 January 1962. No work on interim E&I standards is contemplated beyond that date.

# PART II
# DEVELOPMENT

# SECTION 6

# DESIGN AND FABRICATION OF THE TEST MODEL

## TEST MODEL BLOCK DIAGRAM

Figure 6-1 shows an equipment-oriented functional diagram of the UNICOM Test Model. The diagram identifies the basic subsystems and contains the equipment nomenclature that will be used in succeeding material.

The Test Model will consist of subscriber stations with associated control, ancillary, and signal conversion equipment; a switching center composed of equipment for circuit switching, equipment for assembly of store and forward (S/F) messages, transmission termination equipment, and supervisory control and monitoring equipment; and communication circuit equipment. All equipment will be located at the Bell Telephone Laboratories, Holmdel, New Jersey, except for off-premises transmission circuits. (Figure 6-2 is an artist's concept of the Test Model.)

Figure 6-1 shows two classes of subscriber stations — digital and analog. The digital stations will be capable of originating all modes of information in synchronous digital form. They will be given secure service; that is, the messages will be protected by encryption on both subscriber loops and trunks and will be protected from crosstalk into another message path in the switching center. Analog stations may originate calls in either analog or asynchronous digital form. While classified information may be originated by these stations, the communication system will not introduce encryption or other steps to protect such information. Such protection, if desired, must be provided by the customer through end-to-end encryption.

The switching center will be equipped with two switches. A space-division switch will be used for the interconnection of analog subscriber stations. A time-division switch will be used to switch calls from digital subscriber stations, to provide the flexibility of integrated switching, and to multiplex message channels for digital transmission. The two switches will have access to each other through conversion devices so that analog and digital stations can be interconnected. Both the time-division switch and the space-division switch will have access to the message S/F unit. The message S/F unit will be modular, providing flexibility for growth in modular steps.

The time-division switch, space-division switch, and message S/F unit will be controlled by the central processor (CP). Heading data will be processed and

analyzed by the CP which will act to give the customer the service requested. The CP is a special-purpose stored program device, tailored in its order structure to the particular processing functions required for control of the system. The use of a stored program will provide the means for readily changing the operating principles and doctrines as tests on the Test Model progress.

The console group will provide supervisory control, maintenance facilities, and attendant operation. There will be access to magnetic tapes and typewriters at the consoles.

The central timing unit will provide all the fundamental timing sequences required for modulation, encryption, switching, and multiplexing.

The subscriber transmission termination unit and the trunk transmission termination unit will provide the necessary termination equipment for the subscriber lines and trunks, respectively. They will include:

(1) A data modem, when necessary, to convert binary digital signals to a form suitable for transmission over digital loops and trunks

(2) Digital terminal equipment to correct time variations over the transmission medium and differences between the clock rates at the transmitting and receiving switching centers as well as to generate and supply transmission quality and status information to the switching center

(3) Encryption devices.

The test control center will provide flexibility for establishing different Test Model configurations. Transmission termination and conversion units will terminate on the panel so that four-wire patches can be made to establish the necessary configurations for the tests.

Both simulated and real communication links will be used in the Test Model. Simulated links will be used for tests where actual transmission performance is not of primary importance. Real links, such as military radio and leased trunks, will be used for tests which must include the effects of transmission vagaries. All such links will be terminated at the patch panel.

The following sections cover the Test Model development, specifying the progress made and plans for the next interval on all parts of the Test Model. Supporting technical reports are provided as appendices in Volume II.

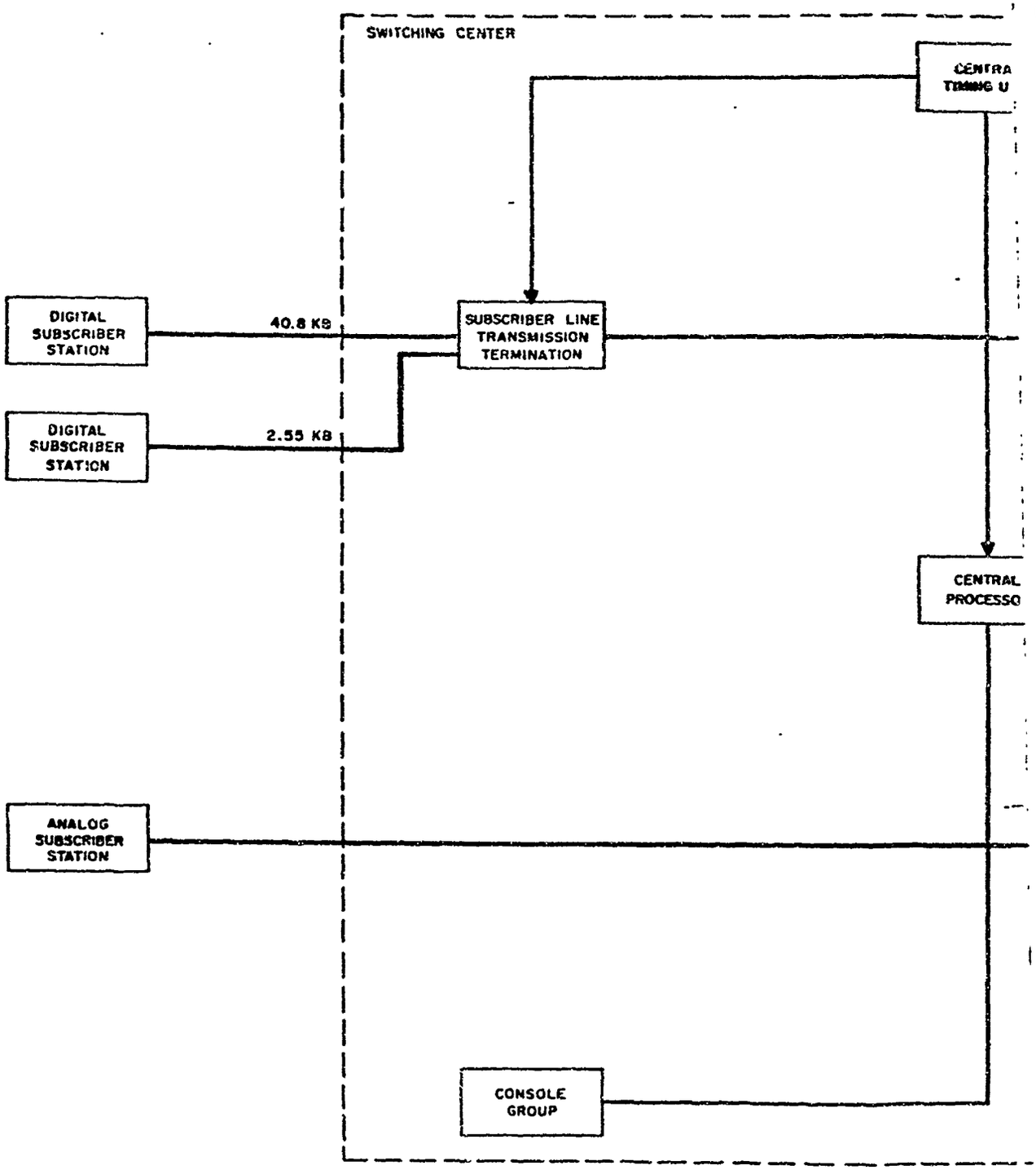
SWITCHING CENTER
CENTRA
TIMING U
DIGITAL SUBSCRIBER STATION
40.8 KB
SUBSCRIBER LINE TRANSMISSION TERMINATION
DIGITAL SUBSCRIBER STATION
2.55 KB
CENTRAL
PROCESSO
ANALOG SUBSCRIBER STATION
CONSOLE GROUP

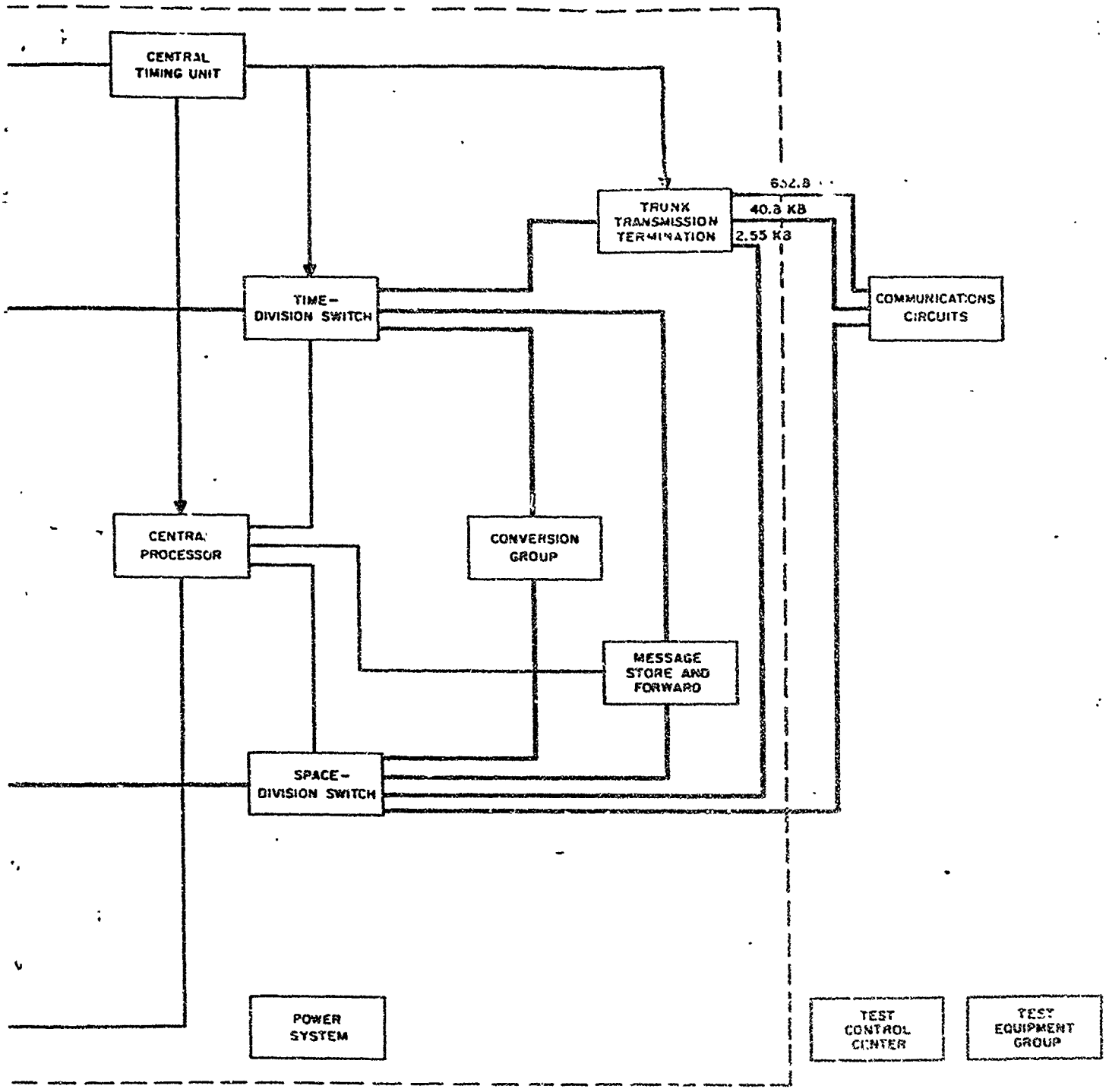


Figure 6-1. Equipment-Oriented Functional Diagram of the UNICOM Test Model

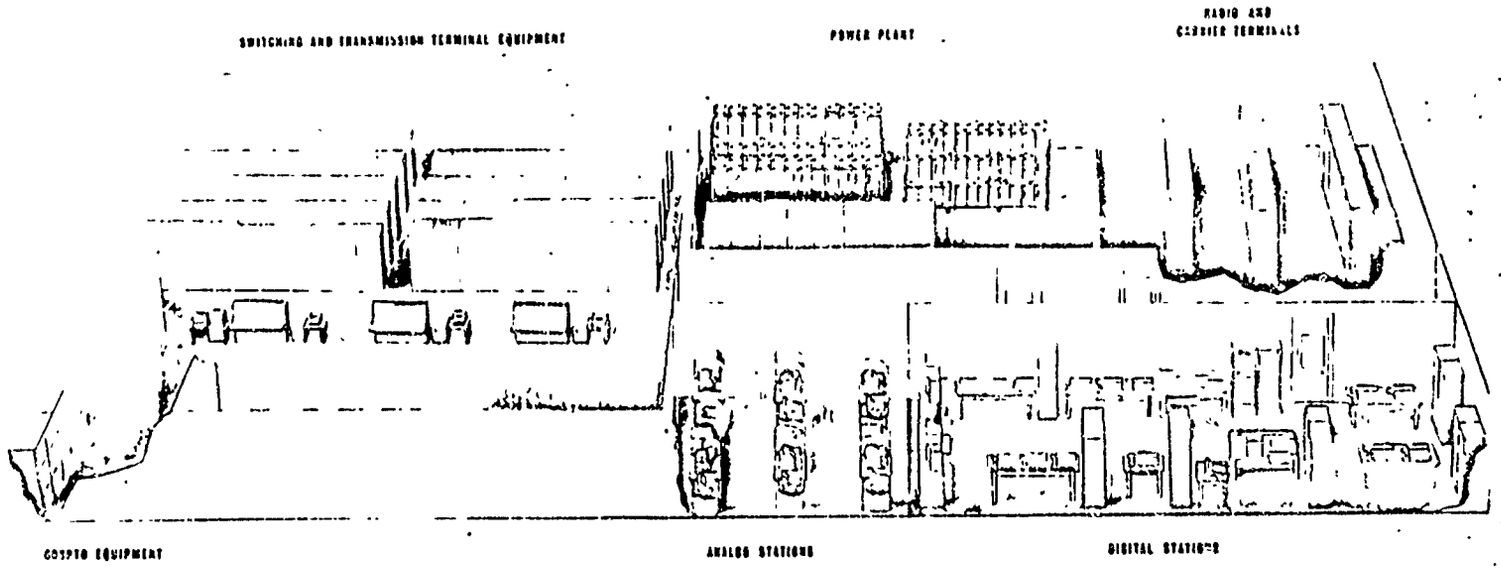


Figure 6-2. Artist's Concept of UNICOM Test Model

## EQUIPMENT DESIGN

During the tenth quarter, drawings were [illegible]d for standard molded circuit cards, terminals, and connectors; for the nest which mounts 32 of these cards; and for standard rack equipment. (Figure 6-3 is an artist's concept of the equipment design.)

Component ordering information has been furnished for approximately 75 percent of the semiconductor devices required for the Test Model. Component ordering information has been released for 12 of the general purpose low-level logic packages.

Wiring practices for rack wiring, including power distribution within racks and rack groups, means for supporting wire, and means for terminating interconnecting wiring are under development and will be established early in the next quarter.

### General Purpose Packages

Final electrical designs of all the originally anticipated general purpose circuit packages for the Test Model have been completed and the designs have been released for mechanical layout of packages. It is expected that these packages will be used for all logic applications. These packages include 12 low-level logic units intended for general logic use and 5 units intended for use in the bus system to be employed in the switching center.

Test specifications for these packages are being written and preliminary specifications for eight packages have been completed and are being reviewed.

A static test set for laboratory-model packages has been used for testing packages to be shipped to RCA and ITT. Several hundred general purpose packages have been tested and released for shipment.

### Semiconductor Device Specifications

Of the ten semiconductor devices used in UNICOM, five have been approved (two by the Navy and three by the Signal Corps) and one has been submitted for approval. Military specifications have been written for the remaining four and will be submitted to the military for approval.

### Wiring Rules

Determination of wiring rules for rack wiring of general purpose logic packages was completed early in this quarter.

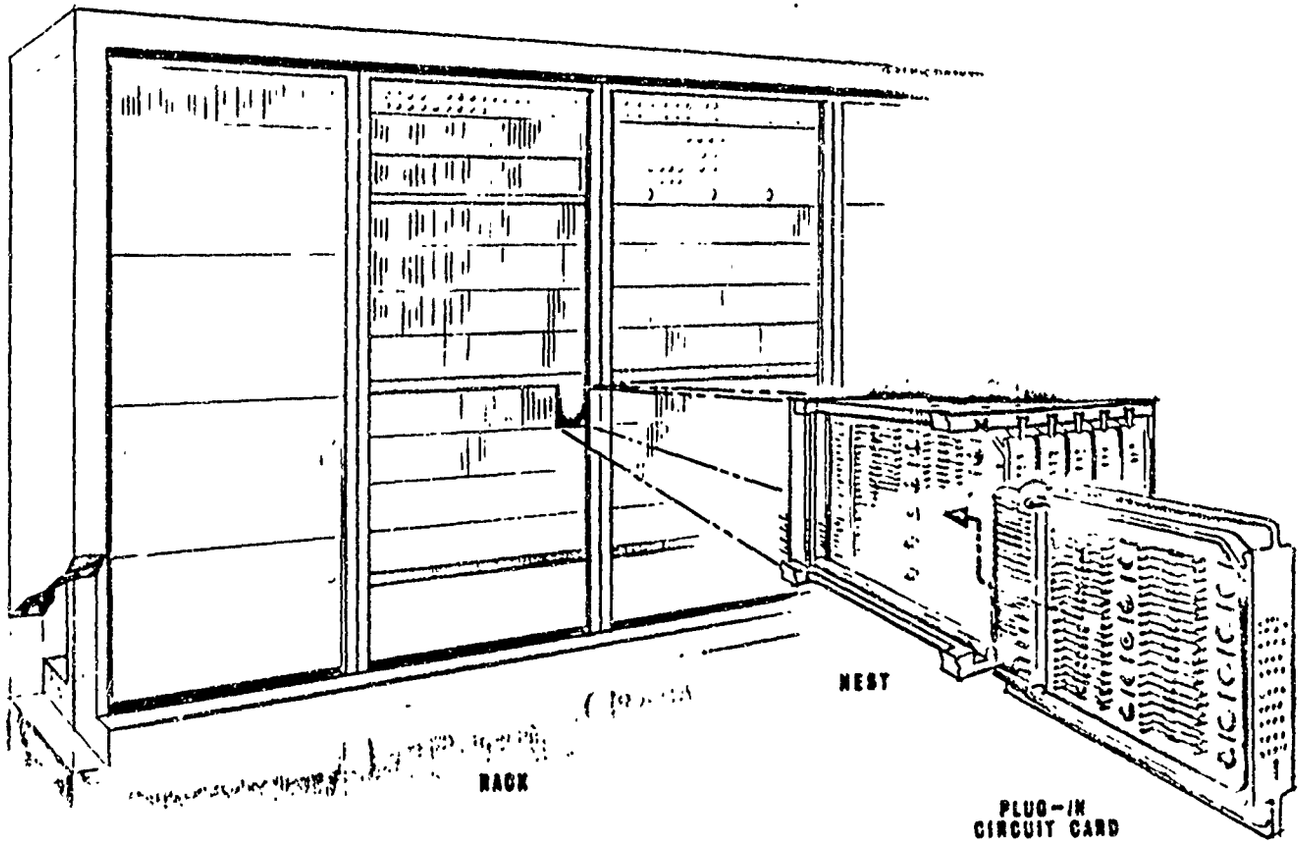


Figure 6-3. Artist's Concept of UNICOM Physical Design

## CENTRAL PROCESSOR

The CP will include central control, about 8000 words of call storage, about 98,000 words of program and translation storage, and control for magnetic tape and typewriter. When duplicates are provided, a working CP can be formed as long as [illegible] of each of the above is operative.

The CP is a stored program device which performs routing and supervisory functions and controls the operation of the time-division switch, space-division switch, message S/F unit, and other equipment as appropriate.

### Central Control

Central control performs the necessary logical operations to execute the stored program. It contains the necessary circuits for cross-matching of critical actions to provide for fault detection. The cross-matching technique permits most equipment malfunctions to be detected within a few microseconds. The decision as to which units are reconnected following a malfunction to re-form a CP, and the switching of these facilities, will take place within a few milliseconds.

The logic design of the central control is expected to be completed during the first quarter of 1962. A program has been developed for the IBM RAMAC computer which will aid in automatically preparing and checking wiring information. This program will choose wiring paths and make certain consistency checks on the logic design information.

A study is under way to determine the procedure and techniques to be used in testing central control. It is expected that this plan will be amplified during the next quarter and specific plans made for a comprehensive test procedure.

### Program Store and Card Writer

The program store, Figure 6-4, provides semipermanent memory for the storage of programs, translation, directory, and diagnostic information. It is being designed as a 98,304-word, 44-bit-per-word, random access, word organized, card changeable, nondestrictuve readout store. Information is stored by the magnetization of tiny permanent magnets on a metallic card and is sensed by twistor wires in close proximity to the magnets. This store requires about 550 circuit packages of 34 different types (13 standard low-level logic and 21 special circuits).

The preliminary circuit designs of all the special packages of the program store have been completed. Laboratory models of 14 types have been tested or are under test. Models of the remaining seven types of special packages are under construction.

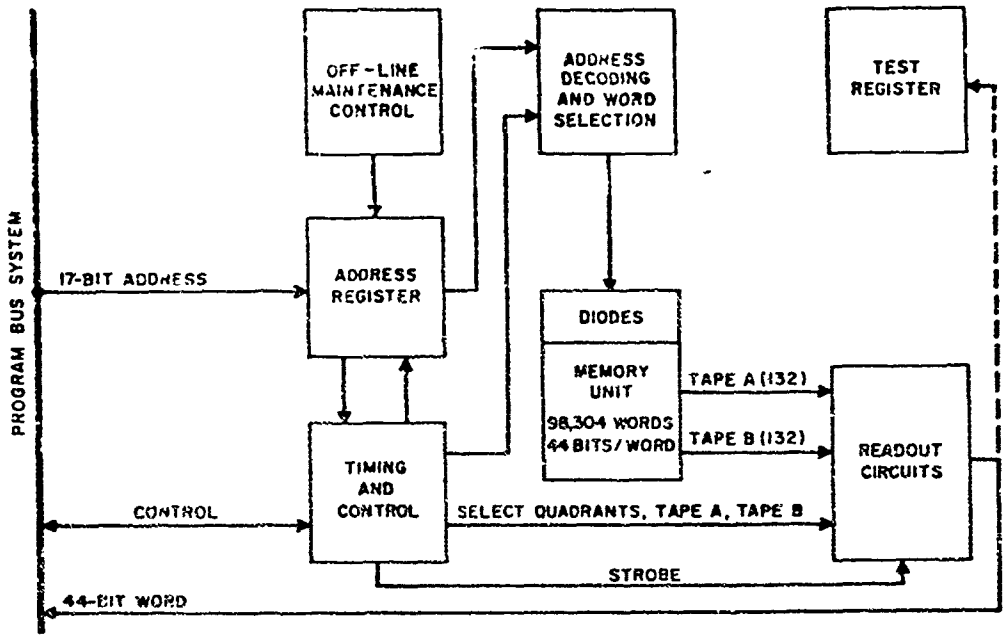


Figure 6-4. UNICOM Program Store

A 32,768-word laboratory model store is being assembled and wired. Initial equipping and testing will start during the eleventh quarter.

The design of a program card verifier and memory module tester is essentially complete. Construction should be completed early in the eleventh quarter. This unit will be used to check the state of magnetization of the program cards in the initial testing phases of the program store card writer.

The program store card writer is used to write new information or to change information previously stored on the magnet cards of the program store. The program store card writer writes on 128 cards (each card contains 64 words of 44 bits per word) in one semiautomatic operation lasting about 15 minutes.

A manual card preparation machine and its associated driving circuitry have been fabricated and will be used to prepare test cards for the laboratory model program store.

## Call Store

The call store (Figure 6-5) provides erasable memory for storing temporary data. It is being designed as an 8192-word, 24-bit-per-word, word organized, random access, destructive readout store. The call store will use approximately 400

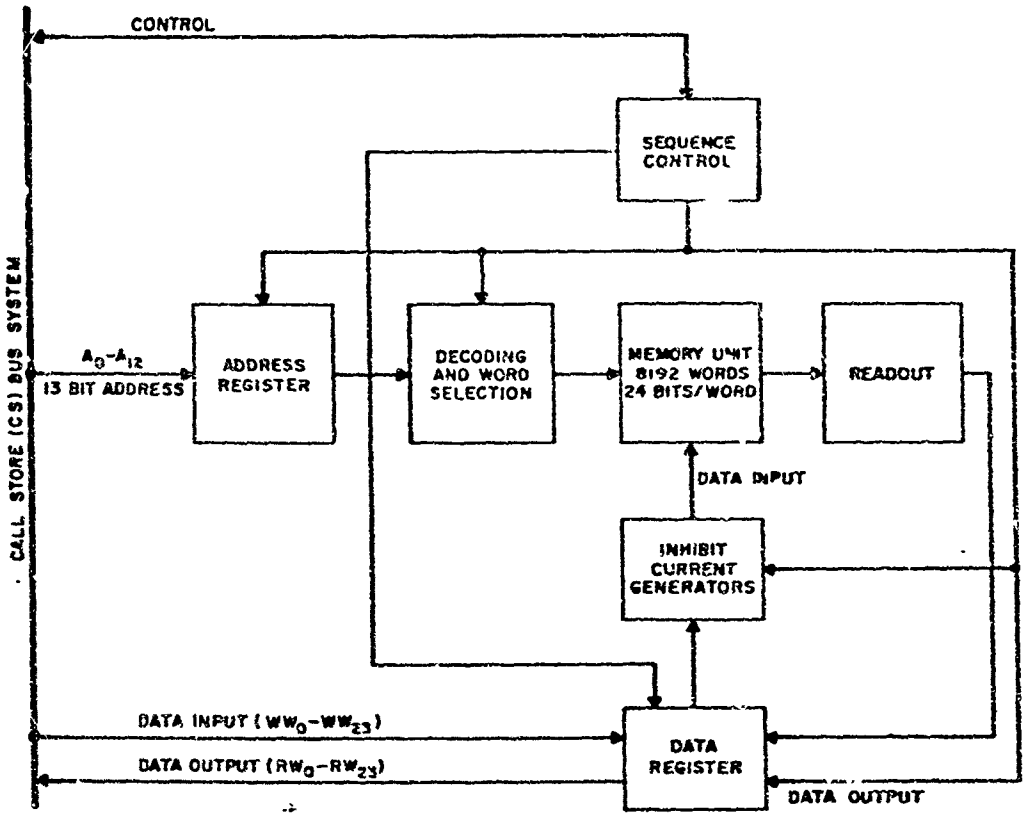


Figure 6-5. Call Store

logic and special purpose packages of 29 types (18 special and 11 standard low-level logic). Three of the special purpose packages have been released for mechanical layout. The design of the call store will be completed during the next quarter.

The timing of the sequence control has been rearranged to include a post write disturb pulse primarily to meet the temperature requirements of the call store. A study is being made of the applicability of the call store design to the message S/F unit.

Also, a preliminary laboratory model of the call store is being constructed. Testing of this model should start at the end of the eleventh quarter.

## SPACE-DIVISION SWITCH

Preliminary apparatus lists and schematic and logic diagrams are being prepared for all items comprising the space-division switch. These are scheduled for completion during the eleventh quarter.

Plans have been completed which will permit all units of the space-division switch to communicate with the CP via the call store bus system.

A block diagram of the space-division switch is shown in Figure 6-6.

Space-Division Switch Matrix and Control

Design drawings for an 8-by-8 four-wire ferreed module will be completed in January 1962. Six models will be built, beginning in February. Four of these will be incorporated in the laboratory model, replacing the two-wire ferreed modules now installed. The other two are being subjected to environmental and electrical tests. Present indications are that the four-wire ferreeds will require approximately the same drive current as the two-wire ferreeds. If so, it is probable that the pulser already developed will be satisfactory for the four-wire application.

Assembly and wiring of the laboratory model of the space-division switch, described in the previous report, is complete to the extent shown below:

A link (including pulser) — 80 percent

C link (including pulser) — 85 percent

Controllers — 25 percent

Space-Division Switch Terminal Circuits

Preliminary circuit development work is complete for an originating register employing standard UNICOM circuits. A laboratory model is currently being tested.

Development is continuing on the application of commercial multifrequency signaling equipment to meet inter-switching center signaling requirements.

Space-Division Switch Signal Distributor

Circuit development of a signal distributor is continuing. The logic diagram is approximately 50 percent complete.

Space-Division Switch Terminal Scanner

A breadboard model of a skeletonized (32-point) scanner has been completed. Based on laboratory measurements and estimates of cable delay and translation time, it has been confirmed that the scanner speed is compatible with that of the CP.

It has been determined that a single type of ferrod unit will be satisfactory for all line and trunk scanner applications. This will greatly simplify circuit assignments, office growth, and administration.

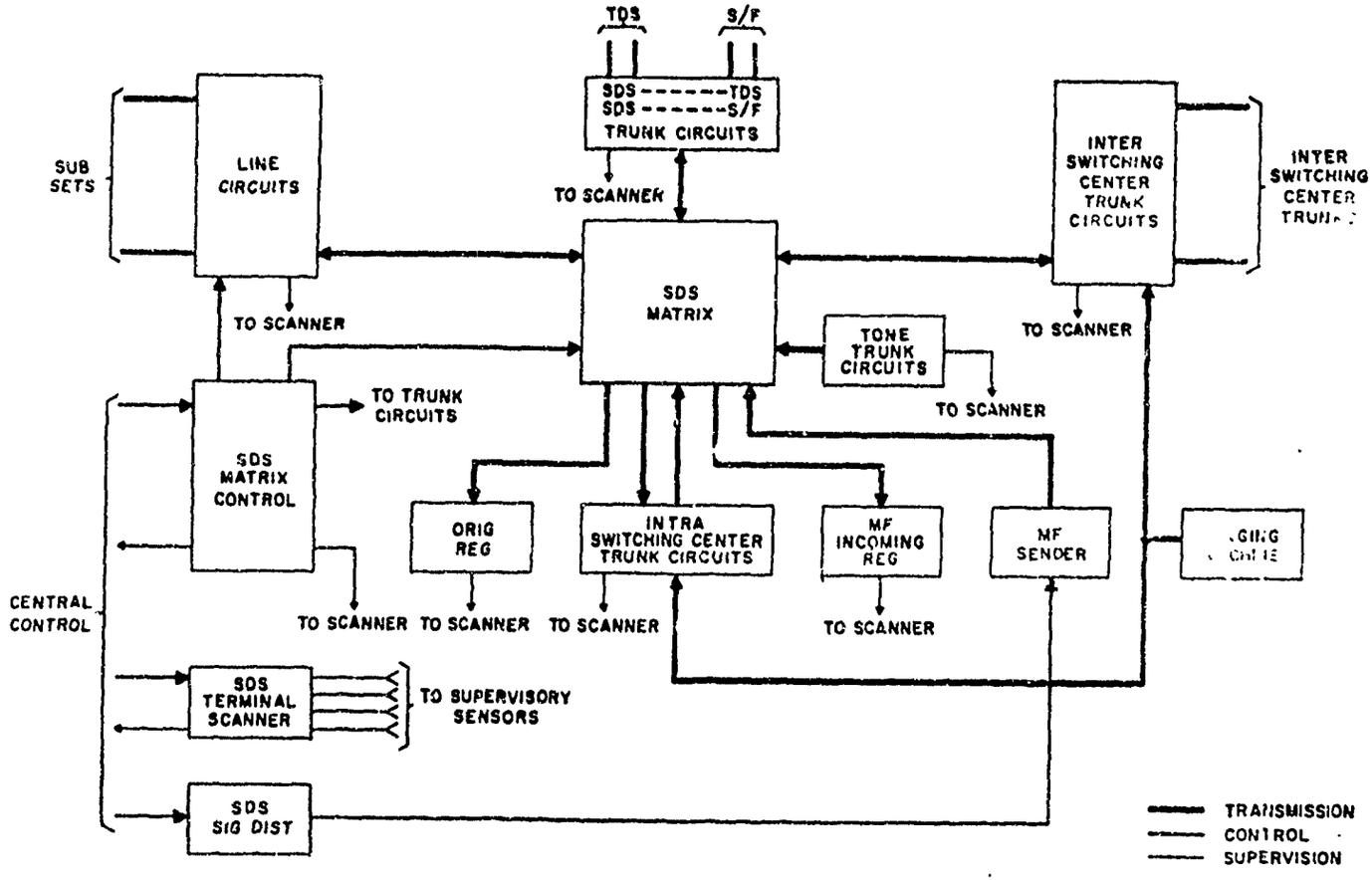


Figure 6-6. Space-Division Switch

A study is being made of a revised supervisory method whereby customer supervision is retained in the line circuit rather than being transferred successively to an originating register and then to a trunk circuit. This proposed arrangement seems to offer attractive possibilities for apparatus reduction, ease of administration, and facility for office growth.

## TIME-DIVISION SWITCH

The time-division switch, Figure 6-7, provides full duplex switching for 2.4-kbps and 38.4-kbps signals and includes associated terminal circuits, duplicated signaling and supervisory facilities, and duplicated control logic. In addition, the time-division switch by programming provides for multiplexing and demultiplexing up to sixteen 2.4-kbps signals on one 38.4-kbps channel and also provides for multiplexing and demultiplexing up to sixteen 38.4-kbps signals on one 614.4-kbps channel.

### Time-Division Switch Design

The logic design of the laboratory model is complete and the wiring of the model will be completed in the eleventh quarter. The timing generator portion has now had power applied and the circuits are being debugged. The delay line stores for this model have been delivered. Combined tests of the matrix and stores will start in the eleventh quarter.

The terminal circuits, which interconnect the time-division switch with the digital terminating units, are under development. Some of the packages have been released for mechanical layout.

In order to meet the Test Model schedule, ultrasonic strip delay lines for the Test Model will be used rather than magnetostriction delay lines. However, investigation of magnetostriction lines is continuing for possible future inclusion to save rack space and possibly to reduce cost.

Considerable progress has been made in developing the control circuit philosophy.

The additional logic for error detection and maintenance has not been completely determined. A study is being made to achieve the desirable balance between programming and equipment in this area.

### Signal Assembler/Distributor

In connection with the revised digital signaling plan referred to in Section 3 of this report, an investigation is being made of the effects of the plan on the signal

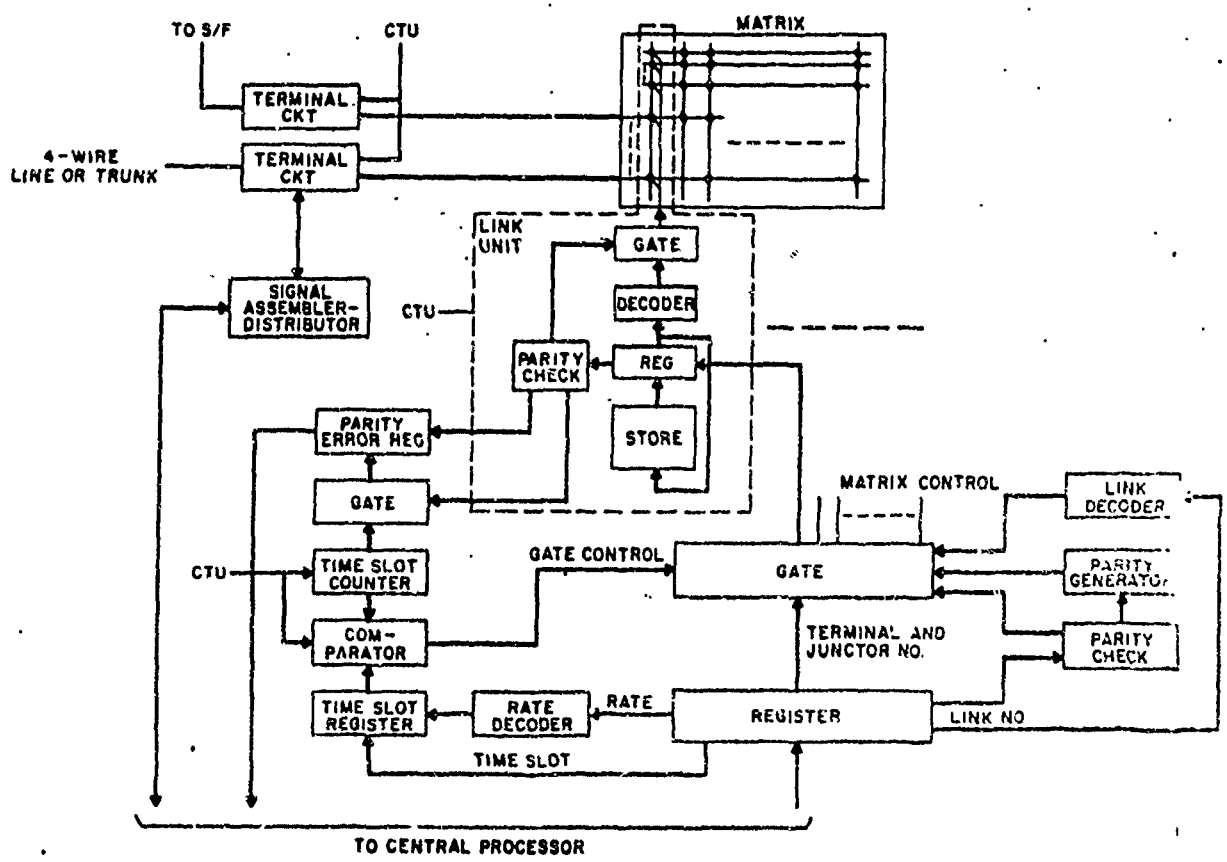


Figure 6-7. Time-Division Switch

assembler/distributor described in the ninth quarterly report. It is expected that the design for this unit can be modified to accommodate the revised plan.

## CENTRAL PROCESSOR STORED PROGRAM

The CP stored program will consist of two major divisions — the operational program and the maintenance program. Preparation of each of these programs will take place in three phases: (1) preparation of a functional specification, (2) preparation of program specifications, and (3) design and production of the actual programs. In addition, certain auxiliary programs must be prepared for use in the IBM 7090 computer.

### Functional Specification — Operational Program

The first draft of the functional specification for the program has been completed. This specification defines the major tasks which the CP must perform. It is expected that, as the need arises, individual sections of the specification will be reissued to reflect the firming up of Test Model requirements and system hardware designs.

The section of the functional specification concerning the digital signaling plan is currently being reviewed in anticipation of the revised digital signaling plan. This plan uses an eight-bit code in both the message and S-bit channels for signaling on lines and trunks. The message channel is used for signaling sequences where speed is important.

### Functional Specification — Maintenance Program

To meet the UNICOM maintenance objectives, programs will have to be developed to implement, in conjunction with hardware maintenance facilities, the function of fault detection for each of the major equipments in the system.

The necessary tests and hardware facilities for implementing this function in the time-division switch, space-division switch, and CP are currently under development. The programs and equipment necessary to implement this function for the S/F module are being developed by ITT.

### Program Specifications — Operational Program

During the tenth quarter a study has been made of various methods of organizing the program system. The objective was to find an organization which would satisfy the real-time requirements and at the same time permit dividing the over-all

job into units of a convenient size for specifying, programming, and testing. An organization that appears to meet these objectives has been developed and is described in Appendix 6A.

The CP program has been divided into about 80 smaller programs which control specific sequences of events. An executive control program controls the sequencing of all control programs and assures that jobs are done in an order which reflects their priority. Input/output operations are controlled by an interrupt program.

During the eleventh quarter, work will be started on detailed program specifications.

Program Specifications — Maintenance Program

During the tenth quarter, preliminary work has been carried on to define the number and approximate size of the maintenance programs required to accomplish fault detection. It is estimated that some 14 programs will constitute the maintenance control function and 9 programs the fault detection function.

Programming — Auxiliary Programs

During the tenth quarter, initial program design and coding has been accomplished on some of the routines necessary for the UNICOM utility system. The programs are being written to operate in the IBM 7090, in the environment of the Bell Telephone Laboratories Monitor System coded the BE-SYS-4.

The UNICOM utility system will provide control of the intercommunication for the library maintenance program, the compiler-assembler, and the UNICOM central processor simulation program.

The compiler-assembler program is currently in various stages of development; the status of current work ranges from a preliminary system design (for the compiler monitor) to active coding and debugging (for the heart of the compiler). The immediate goal is to provide a compiler which will assemble symbolic UNICOM programs (including programmer-defined macros) and which will be capable of handling a higher level programming language when such a language is developed.

The library maintenance program will provide the tools necessary to build and maintain the library of UNICOM programs and/or subprograms on magnetic tape storage. During this quarter, the program logic design, program coding, and initial checkout have been accomplished for the following library maintenance routines: UPDATE and MERGE, which will provide a means of permanently changing the program library; CATALOG (LOG), which provides a means of determining the contents

of a library tape; and POSITION (POS), which provides for positioning a library tape to a specified record.

The detailed organization of the UNICOM simulator program and the format of the control cards have been specified. In this connection, the monitoring facilities and debugging aids provided for by the simulator were expanded. During the quarter, the simulation program for the central processor was flow-diagrammed and is presently being coded. The program is being written to operate in the IBM 7090 computer, in the environment of the Bell Telephone Laboratories Monitor System (BE-SYS-4).

## MESSAGE STORE AND FORWARD MODULES

The message S/F module will provide multi-address S/F service with speed buffering for transmission over trunks between switching centers. This service will provide for teletypewriter, digital data, and facsimile modes of traffic. Efficient operation of the message S/F module in the UNICOM system will be attained by relating control function philosophy to the character of the data to be processed. The heading information will be diverted to the CP for the necessary processing. Under the control of the CP, the message text will be switched to one of a group of logic-controlled S/F modules. Wired logic will control the handling of data bits involved in the assembly of messages into blocks while the CP will control block and message routing operations. The design will permit UNICOM switching centers to be equipped with S/F modules to handle the expected indirect traffic; however, a minimum of two message S/F modules will be required for reliability.

The message S/F module is being organized as shown in Figure 6-8. It is being designed to handle about 55,000 bits of input traffic per second and 55,000 bits of output traffic per second per module. The drum storage capacity of each module can be varied from one to eight drums, and four tape units plus spares will be associated with each module. The equipment for the Test Model will include two message S/F modules, each equipped with three tape units and one drum unit. The message S/F module will consist of six subunits which are discussed in the following paragraphs.

The major activity during the tenth quarter has been related to defining the message S/F module hardware and the CP programs necessary to meet the functional requirements for the UNICOM indirect communication service. A detailed block diagram of the message S/F module has been prepared. Logic design has started in several areas where critical timing problems are expected. Procurement specifications for the drum and tape units have been prepared and are presently being reviewed prior to release for procurement quotations.

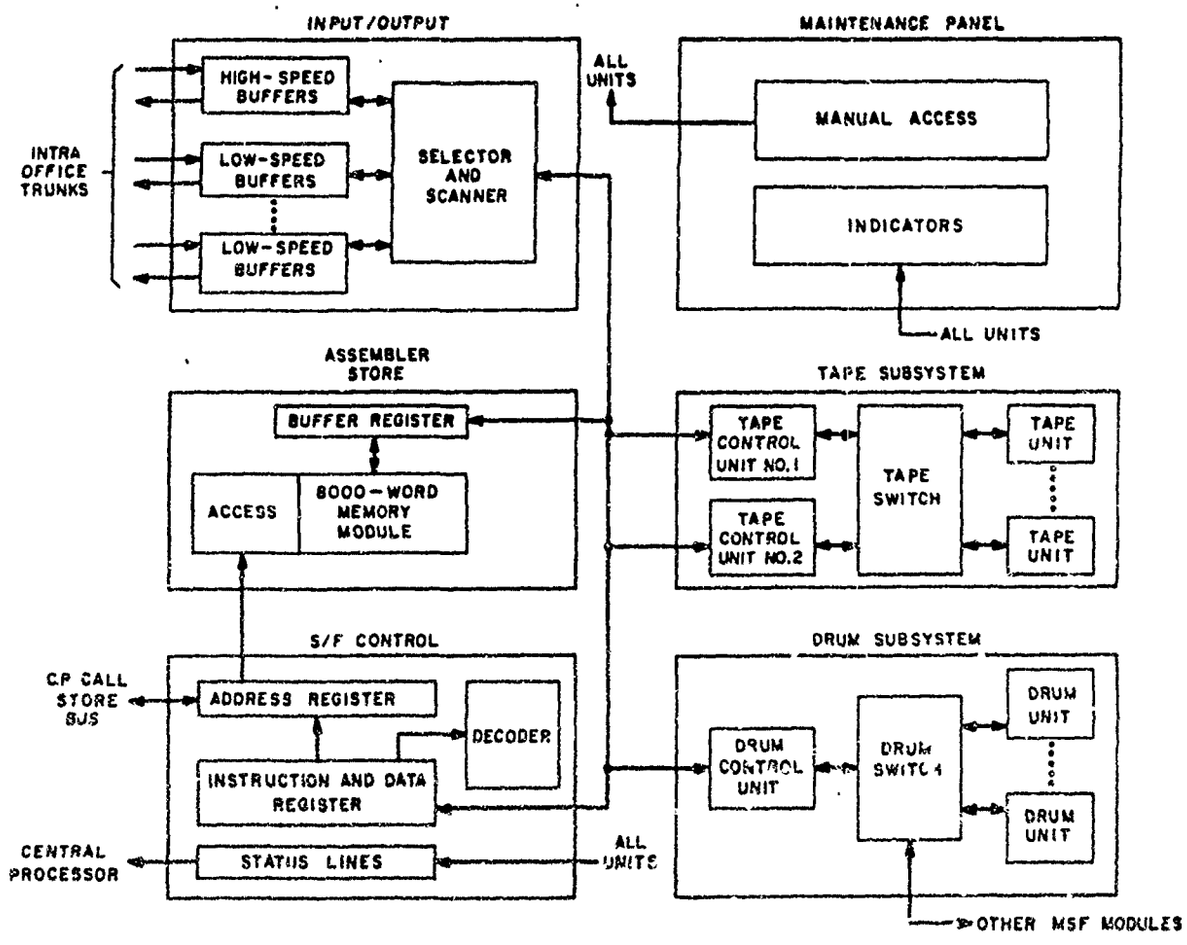


Figure 6-8. Message Store and Forward Module

### Input-Output Unit

The input-output unit provides the buffer storage between the assembler store and the intra-office trunks connecting the message S/F module to the time-division switch or space-division switch. Thirteen duplex data channels will be provided in the design: one channel for 38.4 kbps and 12 channels for rates up to 2.4 kbps. The design will allow for the addition of 12 channels operating at rates up to 2.4 kbps in place of the 38.4-kbps channel if required. For the Test Model, five channels will be equipped for each message S/F module consisting of one 38.4-kbps channel and four channels of 2.4 kbps or less. Techniques for priority scanning of these channels are being investigated.

### Message Store and Forward Control Unit

The message S/F control unit controls single bit operations locally in the message S/F module by orders generated by the CP. Communication of orders from the CP to the message S/F module will be via the call store bus, and status information on the operation of the S/F module to the CP will be via the ferrod scanner. Service requests to the CP will also be controlled by this unit. A preliminary order code for internal control has been prepared and should be finalized in the next period. Internal communication within the message S/F module will be handled by two bus systems. A 24-bit bus will serve as a communication link for data and control words between the assembler store and the other subsystems. A second bus for addressing the assembler store will link the assembler store address register and address registers in the other subsystems.

### Assembler Store

The assembler store is a high-speed random access memory for word and block assembly and buffer storage in data transfers between tapes, drums, and the input-output unit. Control words generated and sent from the CP will be stored in the assembler store to be used by the S/F control unit in processing the S/F traffic. Presently, the feasibility of using the UNICOM ferrite sheet call store design for the assembler store application is being investigated.

### Tape Subsystem

The tape subsystem will provide a bulk storage medium for the semipermanent storage of messages, for storing active facsimile messages, and for storing temporarily drum system overflow. The requirements for the tape system have been studied and a resulting proposal for the tape system is presently under review. The requirements for special circuits required in the tape subsystem are being investigated.

### Drum Subsystem

The drum subsystem will provide for large-volume, rapid access storage for active messages (except facsimile). Manual switching will provide access to the drum units associated with other S/F modules. The procurement specification for the drum unit has been prepared and is being reviewed. The requirements for special circuits required in the drum subsystem are being investigated.

### Maintenance Panel

The maintenance panel will serve an S/F module and give access to critical data transfer points for maintenance. There will be provision for manual insertion of test words for checking control and data paths. The panel will act as an adjunct to the testing routines performed by the CP maintenance programs. Design studies are in progress.

### Programming

The programming group has been working in close cooperation with the equipment design group so that sufficient hardware will be included to allow maintenance and diagnostic programs in the CP to perform their functions with respect to the S/F module with maximum efficiency and economy. A study of the requirements for message retrieval is being made to determine any special hardware requirements. The proposed organization of the CP programs is being studied so that a practical interface with the S/F programs can be achieved.

## CONVERSION GROUP

### Voice Analog-Digital Converter

The voice analog-digital converter will convert a speech signal into a four-digit log-differential pulse code modulation (PCM) signal at 38.4 kbps and vice versa. The converter comprises (1) an encoder (Figure 6-9) that converts a speech signal (60 to 3750 cps) into four-digit differential PCM at 38.4 kbps and (2) a decoder (Figure 6-10) that converts the four-digit differential PCM into a speech signal.

Outstanding features of the proposed design will include:

(1) The application of log-differential PCM, rather than conventional PCM, to achieve adequate signal-to-quantizing-noise ratio within allowed 38.4-kbps digital rate

(2) The application in the encoder of "quantized feedback," rather than simple forward-acting circuitry, to obtain the differential signal

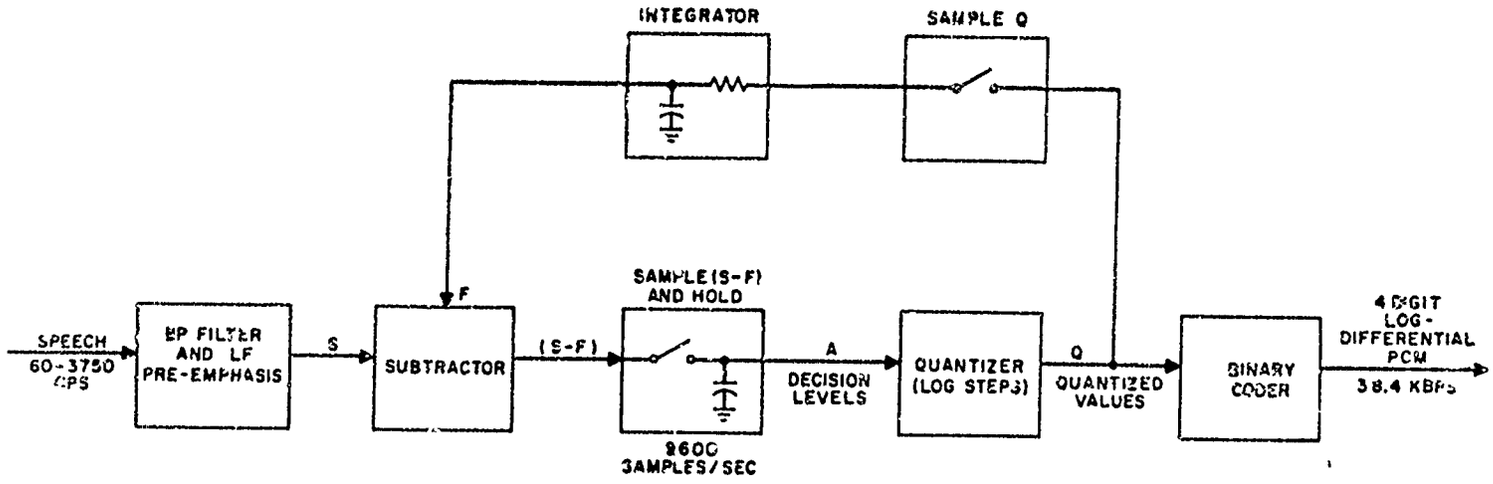


Figure 5-9. Integrator-Feedback Type Log-Differential Encoder

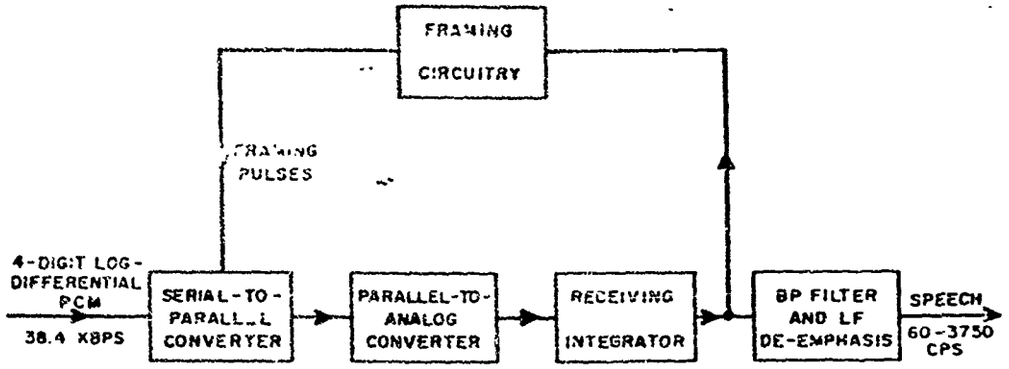


Figure 6-10. Block Diagram of Decoder

(3) The application of low-frequency pre-emphasis before encoding, and low-frequency de-emphasis after decoding, to provide a low-frequency signal-to-quantizing-noise ratio adequate to operate the pitch channel of a vocoder

(4) The application in the encoder of a "switched-network, digit-at-a-time" method of logarithmic quantization

(5) The application in the encoder and the decoder of the framing method described in Appendix 4A which accomplishes framing without the use of separate framing pulses.

During the tenth quarter, detailed design of the converter was started. Standard UNICOM logic packages will be used wherever possible; however, a number of special analog circuits will require development. An operational integrator has been breadboarded and is undergoing tests and the design of the other special circuits has been started. The design and construction of the laboratory breadboard of the converter is progressing on schedule and should be completed in the next quarter. An analysis of encoder operation under zero input signal conditions has been started.

### Vocoders

Six HY-2 vocoders are to be procured from the Philco Corporation. They are expected to be delivered during the third quarter of this year.

## TRANSMISSION TERMINATION EQUIPMENT

Transmission termination equipment will be used in two functional areas — on trunks between switching centers and on lines between a switching center and

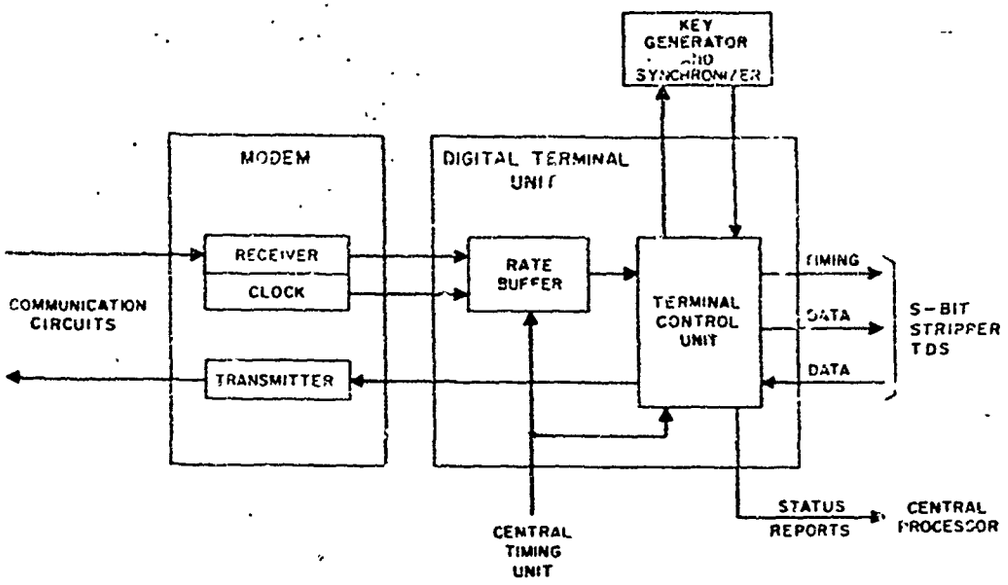


Figure 6-11. Transmission Termination Equipment

subscribers. The transmission termination equipment consists of the following units as required:

(1) Digital terminal unit

(2) Key generator and synchronizer

(3) Data modems.

The data modems will convert the digital data to and from a form suitable for transmission. The digital terminal unit will retime and synchronize the bit stream to the local clock. The key generator and synchronizer will encode and decode the bit stream and synchronize the key generators. Figure 6-11 is a block diagram of the transmission termination equipment.

Digital Terminal Unit. The digital terminal unit provides a four-wire, full duplex digital termination capable of processing the send and receive digital signals at the switching centers or at subscriber stations. The equipment consists of a rate buffer to remove the time varying effects from the received line signal and a terminal control unit to provide control for the operation of the digital terminal unit.

The rate buffer provides storage for compensating for the time varying effects of the incoming digital stream. These effects arise from the presence of variations in the propagation time of the transmission medium and from clock drifts between

the sending and receiving locations. In the case of fixed path length subscriber lines, the rate buffer will correct for phase differences between the incoming digital signal and the local clock. During this quarter, the effort has been directed at evaluating methods of retiming which will yield trunk-to-trunk subframe synchronization with a minimum of equipment.

The terminal control unit will insert in the transmitted digital signal and extract from the received digital signal the control bits to control the operation of the digital terminal unit. Clear frame bits will be checked to determine loss of framing, encrypted frame bits will be checked to monitor the operation of the key generator, and parity bits will be checked to indicate the error rate encountered in the transmission facility. The terminal control unit will correlate status reports from the modem, the rate buffer, and the key generator to determine the appropriate action required to reframe the incoming digital signal or to resynchronize the key generator. These status reports will be summarized and transmitted to the CP for appropriate action in controlling and maintaining the facilities between switching centers. A study of the logic involved in correlating the status reports to initiate appropriate action and the format of the summary information to be sent to the CP is being conducted.

Automatic framing will be required of all trunks and lines in which time variations can occur. A study of time shared reframing equipment as opposed to "per unit" reframing equipment is being conducted. In the case of lines having fixed path length, techniques for manual setting of the framing circuits are being investigated. The study of frame loss detection is continuing. The probability analysis which yields mean time to frame loss detection has been revised to include two clear frame bits per frame rather than one.

Key Generator Synchronizer. The key generator synchronizer is used to synchronize model KG-13 key generators in a four-wire system from a start-up condition or to re-establish synchronization if it is lost during operation. After verifying synchronization, it releases the terminal equipment for digital transmission to the switching center or subscriber.

Modifications of several commercially available units suitable for this application are being considered. Information on the ACF Industries, Inc., Auto-Check Unit has been received and is being studied and evaluated.

Data Modem. A basic modem is being designed for use at both 2.55 and 40.8 kbps. The modem is based on the Bell System 201B set as described in the ninth quarterly report. The major differences between the 201B and the new design are:

(1) Use of an accurate clock for remote locations controlled from a central point and able to hold its frequency through an interruption in the control signal

(2) A new equipment layout to meet the UNICOM design standards

(3) Additional control and monitoring features required for the UNICOM system.

The specification for the modem design has been completed and the detailed design of new features for the UNICOM modem will be undertaken in the eleventh quarter.

## CENTRAL TIMING UNIT

The central timing unit supplies all the basic timing sequences required for modulation, encryption, and supervision in the switching center. The timing sequences will be furnished continuously without phase or frequency discontinuities. To insure operation under these conditions, duplicate circuitry, parallel paths, signal mixing, and other methods for improving reliability will be used.

The central timing unit is composed of the following major subsections:

(1) Master oscillator section

(2) Synthesizer section

(3) Distribution section.

Master Oscillator. During the tenth quarter, several techniques for achieving reliable operation of the master oscillator were evaluated. As a result of this study, the basic frequency of 5.2224 mc will be developed by a combination of two rubidium atomic frequency standards and a crystal oscillator. The stability of the units will be better than five parts in $10^{10}$. To maintain this degree of accuracy and to prevent phase discrepancies from appearing at the outputs of the individual oscillators, the three oscillators will be phase-locked (Figure 6-12). The two rubidium standards will be used as the primary and secondary control stages. Failure of one or two of the oscillators will not cause the output of the combination to fall below the minimum amplitude required to drive the synthesizer. Suitable alarms will be provided to indicate oscillator failure to the operating personnel.

Synthesizer Section. The synthesizer portion of the central timing unit generates the various frequencies required in the switching center. All synthesizer stages will be triplicated to insure the same degree of reliability for each output frequency. Each of the triplicated stages will be monitored and an alarm signal will be provided to indicate malfunctions in any of the three stages to the operator. Equipments will

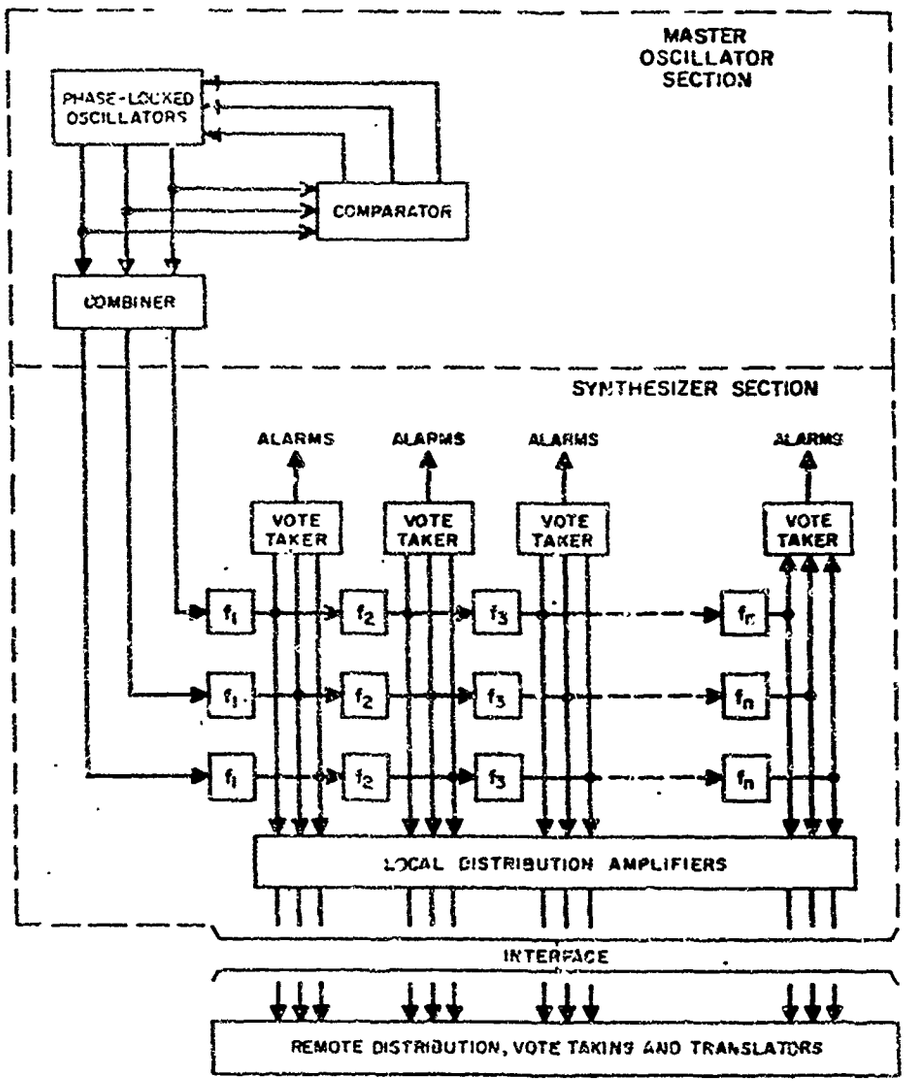


Figure 6-12. Central Timing Unit

be supplied timing signals on a direct feed basis from each of the synthesizer countdown chains. Any vote-taking arrangements to provide reliable signals will be done at the receiving equipment. Studies of the synthesizer and the associated signal distribution problem during the tenth quarter resulted in defining the interface between the central timing unit and the receiving equipments. It has been decided that the central timing unit will provide square wave outputs to the various equipment areas. Any translation functions required to obtain short duration pulses for specific equipments will be implemented in the receiving equipment side of the interface. This arrangement insures that tight tolerance waveshapes are available at the equipment areas and that changes in timing signal requirements of specific areas can be accommodated without drastically affecting the design of the central timing unit.

Since the time-division switch requires the tightest tolerance on timing signals, the synthesizer will be designed to meet these requirements. The central timing unit will be physically located as near to the time-division switch as possible in order to maintain the tolerances over short lines.

Distribution Section. A distribution system will send the various timing frequencies throughout the central office. Buffer amplifiers will be used to eliminate interaction between equipments receiving the same frequency.

In an effort to decrease the distribution problem, the use of a tandem distribution system is being investigated. The clock signals will be coupled from the central timing unit to remote distribution centers located in the various equipment areas by a minimum number of long lines. Distribution to the individual equipments from the remote distribution center will be over relatively short lines. The size of the secondary distribution system required will be a function of the amount of equipment in the particular area. This arrangement would insure a high degree of flexibility for switching center growth from minimum to maximum size.

## CONSOLE GROUP

The console group now envisioned for UNICOM will consist of an attendant's position, a supervisory position, a maintenance position, and necessary equipment to connect these consoles to the CP. Figure 6-13 is a block diagram of the equipment for the Test Model. Provision will be made to add additional attendant's consoles, teletypewriters, and typewriters to the console group as needed for each new office.

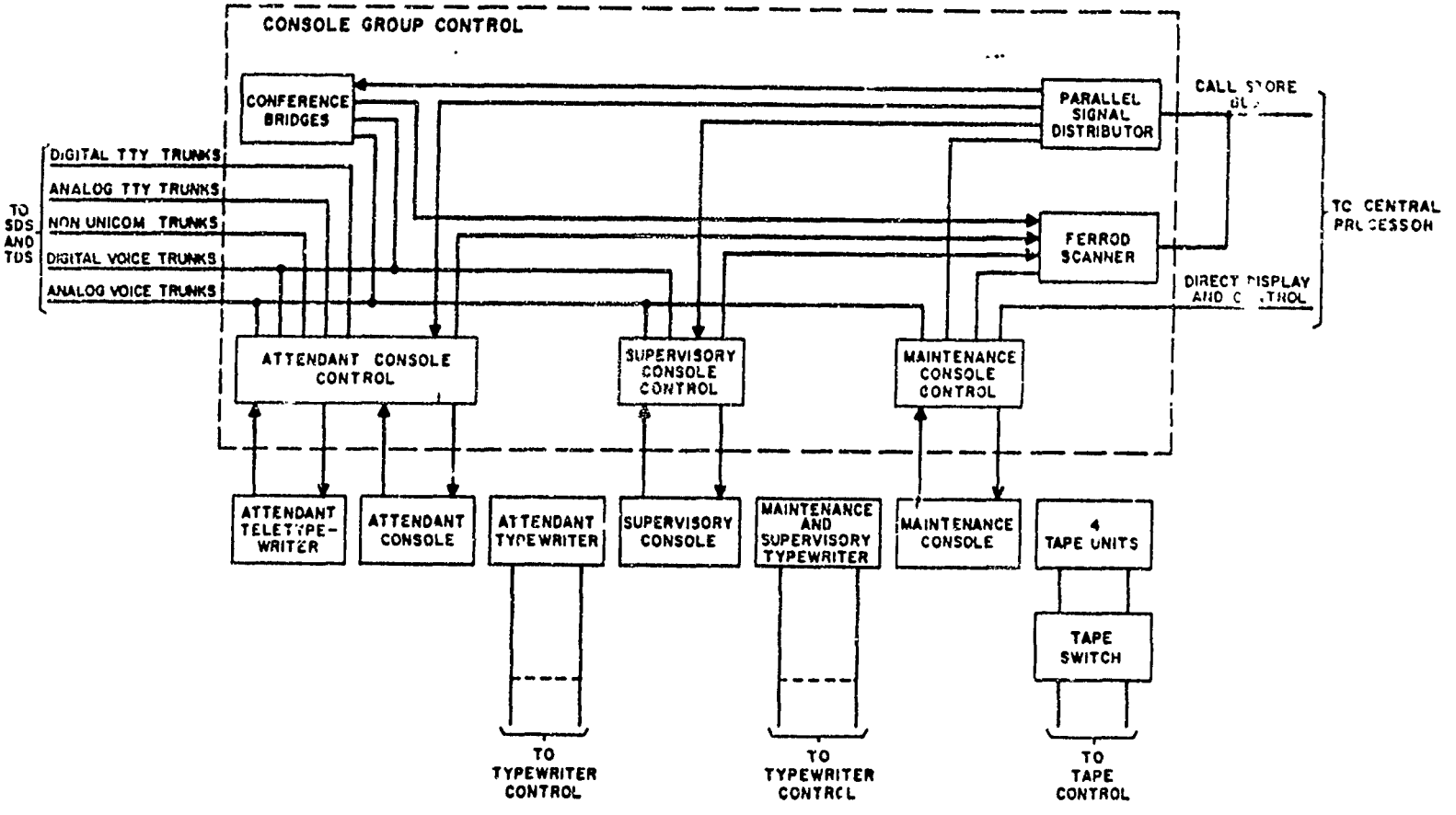


Figure 6-13. Console Group

### Attendant Console

The proposed design for the attendant's position appears in Appendix 6B which covers a description of the controls and displays and how these are used by the traffic attendant in performing the call-handling functions. The traffic attendant's console will be a cordless position at which calls requiring attention will be received one at a time from the CP in an order determined by precedence and call-filling time. The attendant's position will be able to handle both voice and teletypwriter calls from digital and analog subscribers and from non-UNICOM subscribers. A keyset on the console will permit the attendant to set up all necessary preamble heading codes for the originating calls.

### Supervisory Console

A supervisory console will be provided to permit the supervisor to monitor office and trunk traffic and to exercise the necessary control for maintaining a satisfactory grade of service. It is expected that a design proposal for this console will be completed during the eleventh quarter. This proposal will cover the display and control of local traffic and traffic on trunks radiating from the center.

### Maintenance Console

A maintenance console will be provided to indicate system faults and to aid in their detection. A design proposal will be prepared and development of the maintenance console will be started during the eleventh quarter.

### Console Group Control

Logic design of the conference bridges, parallel signal distributor, office intercom system, and console headsets will be completed during the eleventh quarter.

## DIGITAL SUBSCRIBER STATION

The digital subscriber station will consist of an auxiliary unit with separate subscriber sets for each mode of communication, e.g., voice, printed narrative, facsimile, and data. Figure 6-14 is a block diagram of the digital station. The auxiliary unit will be housed in a single closed rack and will consist of the data modem, digital terminal unit, key generator-synchronizer, station power supply, station logic unit, and converters as required, e.g., vocoder or PCM analog-to-digital converter. Figure 6-15 is an artist's concept of a digital subscriber station.

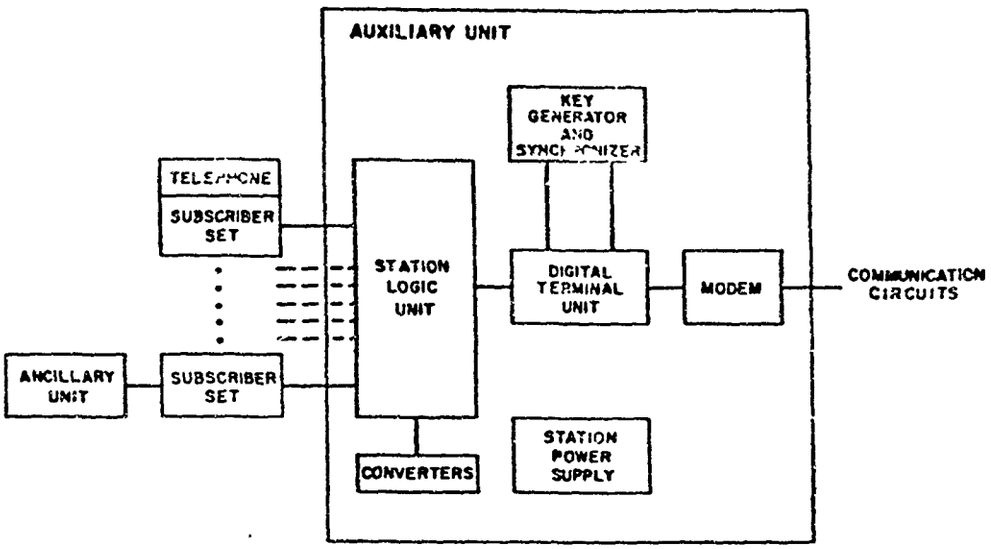


Figure 6-14. Digital Subscriber Station

## Station Logic Unit

The functions of this unit are to control the connection of a single subscriber line to one of several (a maximum of ten) subscriber sets, to control the connection of conversion devices where appropriate, to encode the subscriber-set-initiated commands into standard UNICOM signaling codes and to perform the inverse function of decoding, and to insert and extract the supervisory signaling codes from the outgoing and incoming digital streams. The major effort during the tenth quarter has been concentrated on conducting a comparative cost study on the station logic unit for three proposed signaling plans. The results will be used to aid in the choice of a signaling plan.

## Subscriber Sets

The subscriber sets will permit the subscriber to signal and communicate with the switching center. The subscriber set will consist of manual controls for initiating calls, visual indicators for displays, audible alerting signal devices, and a telephone handset if the mode of communication is voice. Panel layouts for both the voice and ancillary device modes have been prepared and are being reviewed by the human factors engineering group. Mock-ups of the subscriber sets will be prepared in the eleventh quarter. A study of interface requirements between the subscriber set and the station logic unit is being conducted to determine the best techniques for minimizing equipment and interconnecting cables.

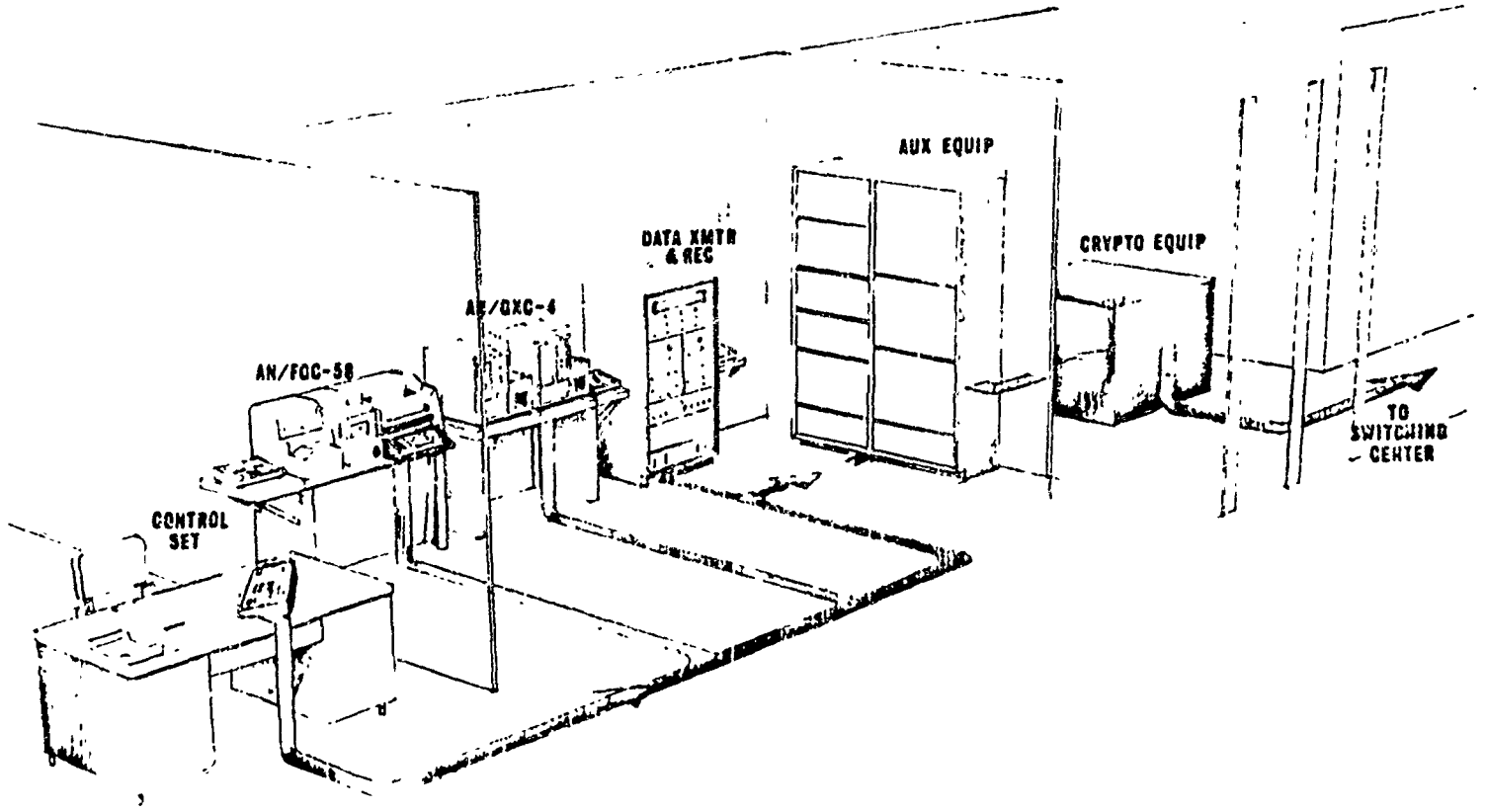


Figure 6-15. Artist's Concept of UNICOM Test Model Digital Subscriber Stations

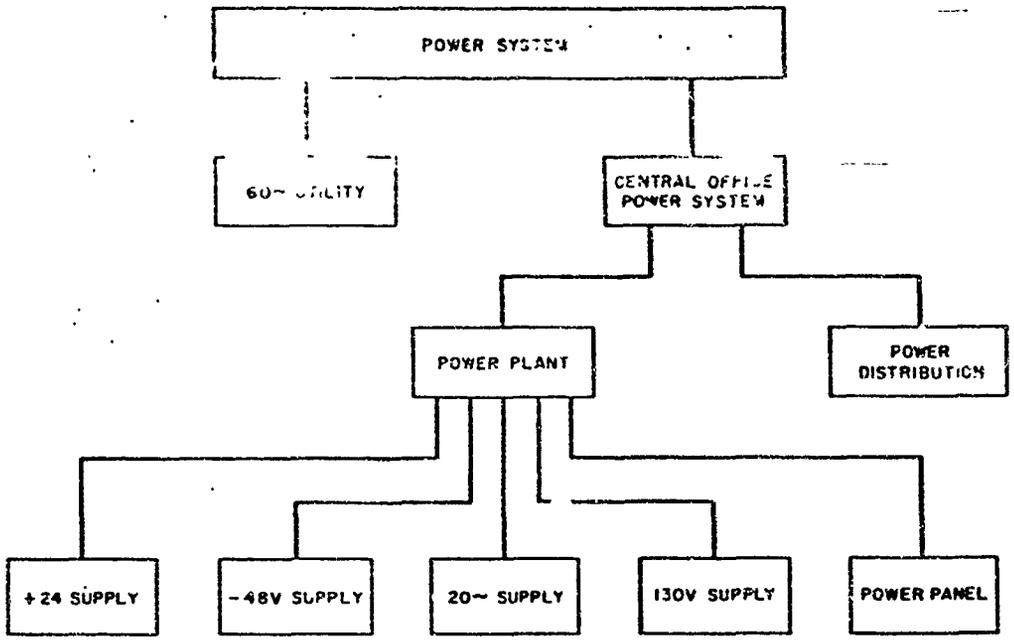


Figure 6-16. Power System

Station Power Supply

DC power for use in the subscriber station will be obtained from regulated power supplies connected to a local ac power source. Failure of the local ac power would remove the station from service until an emergency power source could be connected but would not affect any other part of the system.

## POWER SYSTEM

Equipment in the UNICOM switching center will operate from a central storage battery source. This battery will provide adequate reserve in case of power failure and will be operated "full float." Figure 6-16 is a functional diagram of the power system.

The common battery will provide the required two basic voltage supplies: -48 volts and +24 volts. These are the nominal voltages of a 24-cell and a 12-cell lead acid storage battery, respectively. These batteries will be operated as a non-regulated system and will be floated by normal charging devices and maintained during float at a nominal voltage of 2.17 volts per cell.

In addition to these main voltages there will be auxiliary power sources such as a -130-volt battery for teletypewriter use; general use ac power for convenience outlets, blowers, and lighting; 400-cycle power for drums; and a special source of "no break" ac power for supplying certain special pieces of equipment during time of power failure.

Also, the logic circuitry which is used requires a large amount of dc power at +4.5 ± 0.5 volts. A study of how to supply this power resulted in a decision to obtain it from the +24-volt dc power source and reduce the voltage by means of transistor dc-to-dc converters. This is the most efficient and least expensive means of obtaining the desired power.

The selection of appropriate rectifiers, control bays, and batteries will be completed during the eleventh quarter. Also, a detailed plan of power distribution will be completed during that period.

## COMMUNICATION CIRCUITS

The requirements for transmission circuits for the Test Model are being explored. The procurement of the necessary circuits for use in the Test Model test program is under way.

Two troposcatter radio sets will be purchased. After a study, it was agreed that AN/GRC-66 radio set, with suitable modifications, would be adequate for the UNICOM tests. These sets, as modified for troposcatter operation, have a range of about 100 miles. They have an FM power output of 1 kilowatt. The frequency range is 1700 to 1900 megacycles and 4400 to 5000 megacycles with a 2-db noise figure at the lower band and 4-db noise figure at the higher band.

The main distributing frame to be used at the transmission link terminals has been selected. During the next quarter, plans will be made with the commercial telephone companies for subscriber loops and long distance trunks to operate at transmission rates of 2.55 kbps and 40.8 kbps.

## TEST CONTROL CENTER

The test control center of the Test Model will provide a central point for coordinating and observing test activities. As now planned, it will be adjacent to the switching center equipment room. The master patch board, which displays and controls the Test Model's configuration and equipment assignments, will be in the control center. Two subscriber's stations will also be located in the area.

Although the test control center is primarily for technical coordination, it is also a vantage point for observation and use of the system. Room will be provided for charts, diagrams, and displays that will contribute to effective demonstrations as well as to the engineering tests. Figure 6-17 is an artist's concept of the proposed test control center.

## TEST EQUIPMENT

### Data Generator/Receiver

The data generator/receiver is a test instrument for determining the bit error rates on UNICOM circuits as shown in Figure 6-18. It generates repetitive messages up to 100 bits long at rates of 2.4 and 38.4 kbps. The messages are either transmitted or used for comparison at a receiver location. Transmitted and received messages are compared bit by bit and the errors are counted. Two data generator/receivers have been received and are being used in laboratory tests.

### Facsimile Transmitter-Receiver

An order has been placed with the Westrex Corporation for two GXC-4 facsimile sets. Each set consists of a transmitter and a receiver capable of high-definition recording of a 3-1/4-by-4-1/2-inch copy on Polaroid material. Certain modifications to the GXC-4's will be required to permit transmission with baseband signals at the two different line data rates of the proposed digital stations. Negotiations for these modifications are under way and they will be ordered as soon as agreed upon.

### Printed Narrative Equipment

The following teletypewriters have been received as government furnished equipment for use during the Test Model program.

Six AN/FGC-25 Teletypewriter Sets. These are sending-receiving, page printing, typing reperforators, and tape transmitters for fixed plant stations and communications centers. These sets will be used at the Test Model analog stations.

Six AN/FGC-58 Teletypewriter Sets. They are substantially the same as the AN/FGC-25 except that they are manufactured by a different supplier. These sets will be used at the Test Model digital stations.

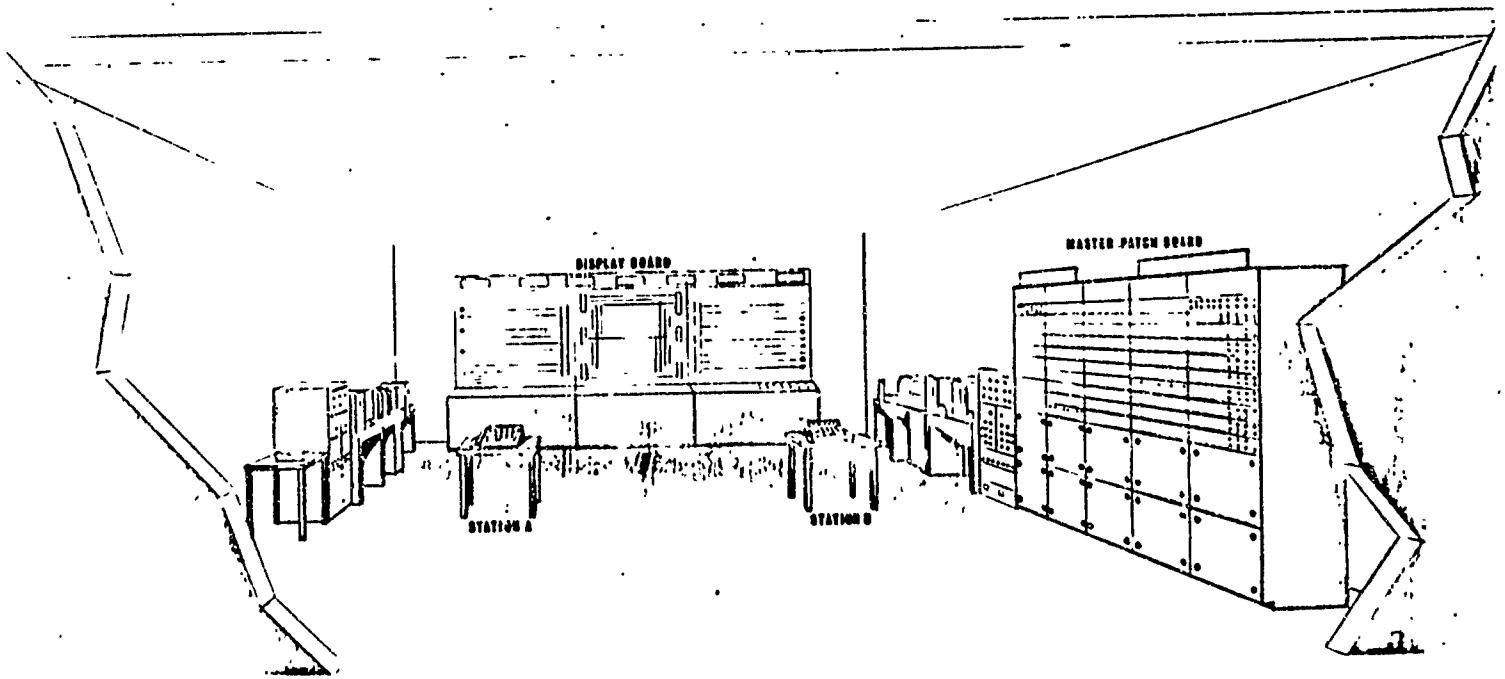


Figure 6-17. Artist's Concept of UNICOM Test Model Test Control Center

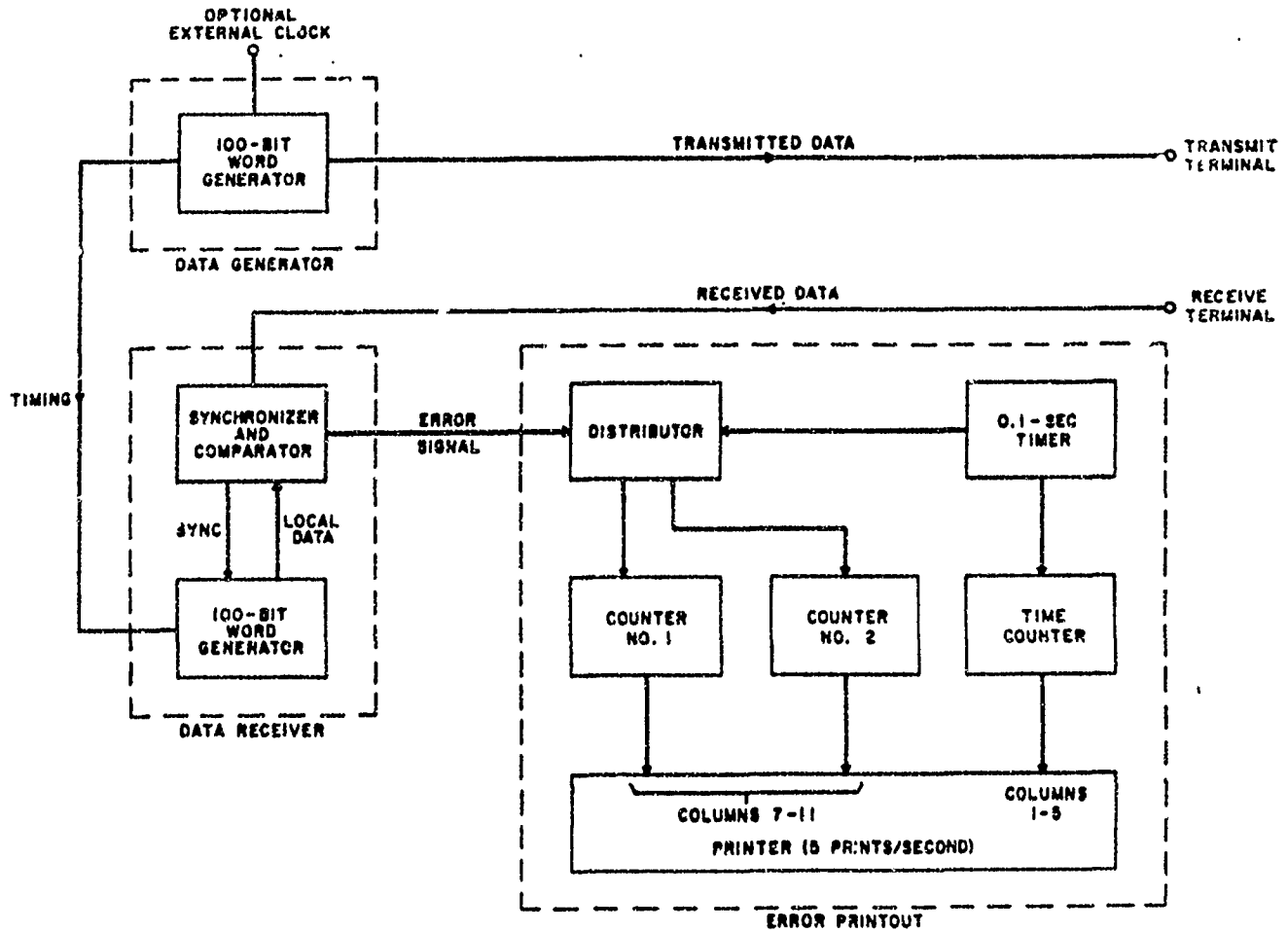


Figure 6-18. Data Generator/Receiver and Error Instrumentation

## TEST MODEL EQUIPMENT INTEGRATION PROGRAM

### Design Standards

The Test Model will be designed and built by several different organizations. In order to control the design, a manual, UNICOM -- Design Requirements and Practices, has been prepared. The purpose of this manual is to present under one cover as much data as practical, pertinent to standardizing design and preparing manufacturing information. This manual is intended to reflect all basic requirements and instructions imposed by the controlling specifications for the UNICOM system.

The progress made during the tenth quarter on the various sections of the design handbook is as follows.

Additional information and revisions to existing material in Section I were made to the drafting guide. This material includes schematic symbols and sample logic diagrams. Also released was a description of the manufacturing information to be prepared by subcontractors. It specifies the type of drawings required and the control of drawing numbers.

A release of Section III was approved and distributed. The contents include over-all equipment characteristics, general design requirements, and electrical power.

A release of Section IV was approved and distributed. The contents include a presentation of the UNICOM logic package, both a general description and logic schematic of 16 packages, and a listing and catalog of approved semiconductor devices.

Presently being worked on or awaiting review are the following topics:

(1) Wire and cable and associated specifications

(2) Capacitor and resistor specifications

(3) Finish specifications.

## PROGRAM FOR THE NEXT INTERVAL

Work planned on the design and fabrication of the Test Model for the eleventh quarter is of the following nature. The electrical design will proceed on the development of the circuits by means of laboratory breadboard models. The objective of this work is to produce circuit schematics in detail. Part of the total required schematics are scheduled for completion during the eleventh quarter with the balance expected to be completed during the twelfth quarter.

The equipment engineering work will proceed on the design of all standard hardware and will start on the design of those specific items on which the information for the schematics is completed during the eleventh quarter.

Specific details of the eleventh quarter program for development of the Test Model have been noted as parts of continuing effort under the discussion of the particular items in this section.

# CONFERENCES

Date: 3 October 1961

Place: Bell Telephone Laboratories, Whippany, N. J.

Organizations Represented: BTL, USASRDL

Subject: Central Control for UNICOM Switching

Resume: The results of a study of the capability of UNICOM central control to handle both circuit-switched and store and forward calls were presented. The conclusion of the study was that the proposed design is adequate with respect to real time occupancy, order repertory, program storage, temporary storage, and communication with peripheral equipment.

Date: 4 October 1961

Place: Bell Telephone Laboratories, Whippany, N. J.

Organizations Represented: BTL, USASRDL

Subject: Design Requirements and Practices (T.M.D. Conf. #12[1])

Resume: A discussion was held on material submitted previously as a draft on this subject and comments were accepted by Bell Telephone Laboratories for further study.

Date: 6 October 1961

Place: Bell Telephone Laboratories, Whippany, N. J.

Organizations Represented: BTL, USASRDL

Subject: Survivability Considerations

Resume: Results of survivability calculations for UNICOM Phases I and II were presented. Consideration was also given to the enhancement in survivability provided by the STARCOM network. It was agreed that the Phase I study should continue to give primary consideration to cold war conditions.

[1]Number assigned out of sequence.

Date: 9 October 1961

Place: USASRDL, Fort Monmouth, N. J.

Organizations Represented: BTL, USASRDL

Subject: Transmission of Facsimile at 2.4-kbps and 38.4-kbps Data Rates

Resume: A proposal for the transmission of facsimile requiring multilevel gray scale definition between digital stations operating at 2.4-kbps and 38.4-kbps data rates was presented and discussed. The possibility of transmitting facsimile requiring only black-and-white definition was also discussed.

Date: 13 October 1961

Place: USASRDL, Fort Monmouth, N. J.

Organizations Represented: BTL, USASRDL

Subject: Test Model Data Modems and Pre-Test Model Test Program

Resume: Data modems planned for the Test Model were discussed. Similar four-phase, single-carrier designs have been proposed both for 2.55-kbps and 40.8-kbps rates. The four-carrier, four-phase design and the FSK subscriber loop modem are being dropped. Several items in a pre-Test Model test program were considered. Extensive tests at 40.8 kbps are planned, with relatively fine-grained measurements of error statistics. Tests at 2.55 kbps over many facilities will primarily confirm feasibility of the method. Tests on HF radio, tropospheric scatter, and submarine cable also have been proposed.

Date: 17 October 1961

Place: USASRDL, Fort Monmouth, N. J.

Organizations Represented: BTL, USASRDL

Subject: Work Statement for Proposed HF Radio Studies to Be Made on Subcontract

Resume: A draft of a work statement for HF radio studies was discussed for the purpose of arriving at agreement on the contents of the proposed work statement. It was agreed that the work would normally be divided into five general categories. Details of the items were agreed upon. The material is to be redrafted and submitted to USASRDL for approval.

Date: 19 October 1961

Place: The Pentagon, Washington, D. C.

Organizations Represented: ACSD, BTL, USASRDL

Subject: Implementation Plan for Phase I

Resume: The results of the Phase I implementation study were presented. It was agreed that preliminary copies of the material presented would be furnished for study by USASRDL and ACSD. It was also indicated that extension of this plan to Phase II should not be undertaken until the Signal Corps has had a chance to study the Phase I results.

Date: 25 October 1961

Place: Bell Telephone Laboratories, Whippany, N. J.

Organizations Represented: BTL, USASRDL

Subject: Modems and the Time-Division Switch (T.M.D. Conf. #9)

Resume: Development of modems and the time-division switch was discussed. The work will be continued as indicated in the discussion.

Date: 1 November 1961

Place: USASRDL, Fort Monmouth, N. J.

Organizations Represented: BTL, USASRDL

Subject: UNICOM Security — Subscriber Installations

Resume: A discussion of subscriber station problems involving security provisions was held to establish an agenda for a conference with NSA and ASA on 3 November 1961.

Date: 3 November 1961

Place: Bell Telephone Laboratories, Whippany, N. J.

Organizations Represented: ASA, BTL, NSA, OCSigO (R&D Div.), USASRDL

Subject: UNICOM Security — Subscriber Installations

Resume: A review of the changes in UNICOM concepts for subscriber stations was presented and the related security provisions were discussed.

Date: 8 November 1961

Place: Bell Telephone Laboratories, Whippany, N. J.

Organizations Represented: BTL, USASRDL

Subject: Voice A/D Converter, Signal Assembler/Distributor, and MSF (T. M. D. Conf. #10)

Resume: Development of the voice analog-digital converter, the signal assembler/distributor system, and the message store and forward unit were discussed. The work will be continued as indicated in the discussion.

Date: 14 November 1961

Place: USASRDL, Fort Monmouth, N. J.

Organizations Represented: BTL, USASRDL

Subject: Effects of Nuclear Detonations on HF Radio Transmission

Resume: USASRDL presented a history of the studies on this subject to date. The effects of high altitude nuclear bursts upon the radio communication system were discussed. Arrangements were made to have certain documents available at Monmouth transmitted to Bell Laboratories. References to specific classified reports of recent dates, through July 1961, were obtained.

Date: 16 November 1961

Place: USASRDL, Fort Monmouth, N. J.

Organizations Represented: ASA, BTL, NSA, OCSigO (R&D Div.) USASRDL (ComSec)

Subject: UNICOM Communication Security

Resume: Communication security aspects of subscriber stations and of store and forward message handling at the switching centers were discussed.

Date: 17 November 1961

Place: USASRDL, Fort Monmouth, N. J.

Organizations Represented: BTL, USASEA, USASRDL

Subject: E&I Standards for Electronic Switching Centers

Resume: Discussion of the E&I standards to be written by Bell Telephone Laboratories was held. Agreements were reached regarding the contents of the standards, review of the standards by Bell Telephone Laboratories beginning 1 January 1962, final review by USASRDL beginning 15 January 1962, and submission of the completed document to DCA on 31 January 1962.

Date: 17 November 1961

Place: USASRDL, Fort Monmouth, N. J.

Organizations Represented: Bendix, BTL, USAAMA, USASRDL

Subject: UNICOM-Advent Interconnection

Resume: Bendix proposals for modification of Advent to work with UNICOM were discussed. A proposed arrangement for a UNICOM-Advent trunk was discussed.

Date: 17 November 1961

Place: USASRDL, Fort Monmouth, N. J.

Organizations Represented: BTL, USASRDL

Subject: UNICOM Connections Via Advent Links

Resume: Proposed types of key generators to be used on UNICOM-Advent links were discussed.

Date: 22 November 1961

Place: Bell Telephone Laboratories, Whippany, N. J.

Organizations Represented: BTL, USASRDL

Subject: Review of Systems Engineering Work on Switching and Signaling

Resume: A brief review of the current work in this area was presented with emphasis on such items as the choice of switching matrices, maintenance and reliability objectives, signaling plans for interswitching office trunks, and error control methods for the store and forward traffic.

Date: 27 November 1961

Place: Bell Telephone Laboratories, Whippany, N. J.

Organizations Represented: BTL, USASRDL

Subject: Subscriber Stations

Resume: Miscellaneous contractor proposals in the areas of ancillary devices, station arrangements, service features, and subscriber control sets were reviewed.

Date: 30 November 1961

Place: Bell Telephone Laboratories, Whippany, N. J.

Organizations Represented: BTL, USASRDL

Subject: Central Processor System (T.M.D. Conf. #11)

Resume: Organization of the central processor system was presented and discussed. Work in this area will continue as indicated in the discussion.

Date: 6 December 1961

Place: Western Union Telegraph Co., 60 Hudson Street, New York, N. Y.

Organizations Represented: BTL, USASRDL, ACSD, Western Union

Subject: ComLogNet

Resume: A presentation was made of the ComLogNet message switching system by Western Union for the benefit of Bell Telephone Laboratories personnel who are writing E&I standards for electronic switching centers. Of primary interest was the interface problem between ComLogNet and other military communications systems.

Date: 7 December 1961

Place: International Electric Corporation, Paramus, N. J.

Organizations Represented: ACSD, BTL, IEC, ITTFL, USASRDL

Subject: 465L Command and Control System

Resume: A presentation was made by IEC of the 465L command and control system used by SAC. The purpose was to help in the writing of E&I standards for electronic switching centers in DCS. Of primary interest was the interface problem between 465L and other military communications systems.

Date: 14 December 1961

Place: Bell Telephone Laboratories, Whippany, N. J.

Organizations Represented: BTL, USASRDL

Subject: Environmental Control (T.M.D. Conf. #13)

Resume: Problems of environmental control were discussed with the aid of the results of a recent comparative study of different size switching centers. Physical arrangement of UNICOM equipment packages was also discussed as was a proposal to use a seven-foot standard rack.

Date: 15 December 1961

Place: USASRDL, Fort Monmouth, N. J.

Organizations Represented: BTL, USASRDL

Subject: User Needs

Resume: The subject of user needs was reviewed and a number of questions were raised. Discussions followed on various pertinent topics: automatic message accounting, recording requirements, the hold feature, handling STARCOM PN message headings, PN conferences, allocated circuits, and analog users.

Date: 18 December 1961

Place: USASRDL, Fort Monmouth, N. J.

Organizations Represented: Bendix, BTL, USASRDL

Subject: UNICOM-Advent Interconnection

Resume: Technical characteristics of UNICOM-Advent interface were discussed further.

Date: 19 December 1961

Place: ITT Federal Laboratories, Nutley, N. J.

Organizations Represented: BTL, ITTFL, USASRDL

Subject: UNICOM — AN/GRC-66 Scatter Radio Terminals

Resume: Terminals, packaging, transmitter power, frequency bands, antennas, traffic capacity, PCM equipment, EACP order, and remote switching were discussed. ITTFL installation, service, and inspection of components in the process of manufacture were also considered.

Date: 20 December 1961

Place: Bell Telephone Laboratories, Whippany, N. J.

Organizations Represented: BTL, USASRDL

Subject: Attendant's Console (T.M.D. Conf. #14)

Resume: The design proposal for the attendant's console and the maintenance and reliability guideline for the development of the Test Model were discussed. Work in this area will continue as indicated in the discussion.

**Date:** 21 December 1961

**Place:** USASRDL, Fort Monmouth, N. J.

**Organizations Represented:** BTL, RCA, USASRDL

**Subject:** HF Radio Transmission Studies by RCA

**Resume:** Discussion of this subject centered on the following items: (1) determining the relative importance of the various parts of the work statement and (2) determining the means for obtaining access to reports on pertinent classified subjects. In addition, the answers were procured to a series of technical questions which formed the basic agenda for the meeting.

# KEY PERSONNEL

Here, briefly, are the technical backgrounds of the people who joined the UNICOM project in a supervisory capacity during the tenth quarter.

L. H. BEZER, WECo, received a Bachelor of Electrical Engineering degree from the Polytechnic Institute of Brooklyn. He has done graduate work there and at Fairleigh Dickinson University. During his 25 years in the Bell System, he has supervised work on radar systems such as the SCR 547 and 545, radio communication systems including AN/TRC-24, and carrier communication systems used in commercial installations, as well as such radio sets as the AN/TRC-3, -5, -7, and -11. He most recently was in the Air Defense Engineering Services (ADES) branch of Western Electric Company. This work, in the Transmission Engineering organization, established communication requirements for the SAGE system. Work in Engineering Coordination involved supervising coordination of analyses of incompatibilities at interfaces between SAGE radars, digital data, communication, and computerized subsystems.

J. H. HELFRICH, BTL, holds a Mechanical Engineering degree and an MS degree in Electrical Engineering, both from Stevens Institute of Technology. He has 11 years of design experience, the last seven of which have been with Bell Telephone Laboratories. His work has included design and development of vacuum tubes, digital systems, and data transmission systems.

L. M. SMITH, BTL, holds a BS in electrical engineering from the University of Washington, an MS in mathematics from Stevens Institute of Technology, and is a graduate of the Bell Telephone Laboratories Communications Development Training Program. During his 10 years with Bell Telephone Laboratories, he has worked on the development of AN/TSQ-7, -8, and -36 Coordinate Data Sets, CV-424/FSQ Digital Data Converter, AN/ASW-14 Digital Data Communications Control Set, and the AN/TYA-13(V), -14, and -15 Digital Data Sets.

The backgrounds of other key personnel were given in previous UNICOM quarterly reports.

# DISTRIBUTION

Office of the Secretary of Defense
ATTN: Assistant Director of Defense Research and Engineering, Mr. Ralph Clark
Room 3D-1051, The Pentagon
Washington 25, D. C.

Chief of Research and Development
Office Chief of Staff
Department of the Army
Washington 25, D. C.

Director
Weapons Systems Evaluation Group
Office of Defense Research and Engineering
Room 1D 876, The Pentagon
Washington 25, D. C.

Chief Signal Officer
Department of the Army
Washington 25, D. C.
ATTN: SIGRD

Chief Signal Officer
Department of the Army
Washington 25, D. C.
ATTN: SIGPD-8BL (8)

Chief Signal Officer
Department of the Army
Washington 25, D. C.
ATTN: SIGRD-6 (For distribution to Department of Defense and Army Communications Systems Division) (6)

Director, National Security Agency
Fort Meade, Maryland
ATTN: STED (3)

Chief, U. S. Army Security Agency
Arlington Hall Station
Arlington 12, Virginia
ATTN: GAS-24, Mr. Disenmaus (3)

Army Communications Systems Division
Office of the Chief Signal Officer
Washington 25, D. C.
ATTN: SIGAC-11

Director
U. S. Naval Research Laboratory (2027)
Washington 25, D. C.

Commanding Officer and Director
U. S. Navy Electronics Laboratory
San Diego 52, California

Electronic Systems Division (ESSD)
United States Air Force
Air Force Systems Command
L. G. Hanscom Field
Bedford, Massachusetts

Commander
Rome Air Development Center
Air Research and Development Command
Griffiss Air Force Base, New York
ATTN: RAYLD

Commander
Rome Air Development Center
Air Research and Development Command
Griffiss Air Force Base, New York
ATTN: RCUO

Commander
Air Force Command Control Division
CCSD — 180 L SPO
Laurence G. Hanscom Field
Bedford, Massachusetts (4)

Commanding General
U. S. Army Electronic Proving Ground
Fort Huachuca, Arizona
ATTN: Technical Library

Commander
Armed Services Technical Information Agency
Arlington Hall Station
Arlington 12, Virginia
ATTN: TIPDR (15)

Commanding Officer
Diamond Ordnance Fuze Laboratories
Washington 25, D. C.
ATTN: Library, Room 211, Bldg 92

U. S. Army Signal Research and Development Liaison Officer
Rome Air Development Center
Griffiss Air Force Base, New York
ATTN: RCOL

U. S. Army Signal Research and Development Liaison Officer
Lincoln Laboratory
Post Office Box 73
Lexington, Massachusetts
ATTN: Col. C. W. Janes

U. S. Continental Army Command Liaison Office
U. S. Army Signal Research and Development Laboratory
Fort Monmouth, New Jersey (3)

Corps of Engineers Liaison Office
U. S. Army Signal Research and Development Laboratory
Fort Monmouth, New Jersey

U. S. Marine Corps Liaison Office
U. S. Army Signal Research and Development Laboratory
Fort Monmouth, New Jersey

Commanding Officer
U. S. Army Signal Materiel Support Agency
Fort Monmouth, New Jersey
ATTN: SIGMS/ADJ

Commanding Officer
U. S. Army Signal Research and Development Laboratory
Fort Monmouth, New Jersey
ATTN: Director of Research and Engineering

Commanding Officer
U. S. Army Signal Research and Development Laboratory
Fort Monmouth, New Jersey
ATTN: Technical Documents Center

Commanding Officer
U. S. Army Signal Research and Development Laboratory
Fort Monmouth, New Jersey
ATTN: SIGRA/ADJ, File Unit No. 2

Commander
Ground Electronics Engineering Installation Agency
Griffiss Air Force Base, New York
ATTN: ROZMEF

Commanding General
U. S. Army Advent Management Agency
Fort Monmouth, New Jersey
ATTN: SIGFM/PAM-6

Army Communication Systems Division
Office of the Chief Signal Officer
Washington 25, D. C.
ATTN: Major A. M. Churchwell (19)

Commanding Officer
U. S. Army Signal Research and Development Laboratory
Fort Monmouth, New Jersey
ATTN: Technical Information Division (5)

Commanding Officer
U. S. Army Signal Research and Development Laboratory
Fort Monmouth, New Jersey
ATTN: Logistics Division
R. A. Fletcher, Project Manager, UNICOM (10)

Commanding Officer
Defense Communications Agency
Washington 25, D. C.
ATTN: Code 722, Capt. F. W. Kittler (2)

Commanding General
U. S. Army Advent Management Agency
Fort Monmouth, New Jersey

Stanford Research Institute
Menlo Park, California
ATTN: General Systems Department
In connection with DA-36-039-sc-76481

Director, Defense Systems Laboratory
Syracuse University Research Corporation
Syracuse 10, New York
ATTN: Dr. Andrew Longacre

Bendix Corporation
Bendix Systems Division
Ann Arbor, Michigan
ATTN: Mr. J. Browder

F. C. McMullen
Western Electric Company
222 Broadway
New York 38, N. Y.

M. Ewasyshyn
Western Electric Company
220 Church Street
New York 13, N. Y.

H. N. Willets
Western Electric Company
222 Broadway
New York 38, N. Y.

L. L. Gaddis
AT&T Company
Long Lines Department
32 Avenue of the Americas
New York 13, N. Y.

AD Accession No.

Bell Telephone Laboratories, Inc., Whippany, N. J. Project UNICOM (Universal Integrated Communications System) Progress Report for Tenth Quarter, 1 October through 31 December 1961, dated 31 December 1961, 2 vols., 165 pp. Signal Corps Contract DA-36-039-sc-78806.

This report of the tenth quarter of Project UNICOM describes the work accomplished in the following areas: A report on the transmission facilities required for UNICOM Phase I (1965) was prepared. A study of three plans for signaling between subscriber stations and the switching center resulted in the choice of a plan utilizing the message channel for high-speed heading transfer. An initial maintenance and reliability guideline was issued. Objectives for the performance of digital modems and specifications for digital terminating unit basic optional

Abstract Card
UNCLASSIFIED

1. Communications — Basic Plan for Universal Integrated System
2. Contract DA-36-039-sc-78806

AD Accession No.

Bell Telephone Laboratories, Inc., Whippany, N. J. Project UNICOM (Universal Integrated Communications System) Progress Report for Tenth Quarter, 1 October through 31 December 1961, dated 31 December 1961, 2 vols., 165 pp. Signal Corps Contract DA-36-039-sc-78806.

This report of the tenth quarter of Project UNICOM describes the work accomplished in the following areas: A report on the transmission facilities required for UNICOM Phase I (1965) was prepared. A study of three plans for signaling between subscriber stations and the switching center resulted in the choice of a plan utilizing the message channel for high-speed heading transfer. An initial maintenance and reliability guideline was issued. Objectives for the performance of digital modems and specifications for digital terminating unit basic optional

Abstract Card
UNCLASSIFIED

1. Communications — Basic Plan for Universal Integrated System
2. Contract DA-36-039-sc-78806

AD Accession No.

Bell Telephone Laboratories, Inc., Whippany, N. J. Project UNICOM (Universal Integrated Communications System) Progress Report for Tenth Quarter, 1 October through 31 December 1961, dated 31 December 1961, 2 vols., 165 pp. Signal Corps Contract DA-36-039-sc-78806.

This report of the tenth quarter of Project UNICOM describes the work accomplished in the following areas: A report on the transmission facilities required for UNICOM Phase I (1965) was prepared. A study of three plans for signaling between subscriber stations and the switching center resulted in the choice of a plan utilizing the message channel for high-speed heading transfer. An initial maintenance and reliability guideline was issued. Objectives for the performance of digital modems and specifications for digital terminating unit basic optional

Abstract Card
UNCLASSIFIED

1. Communications — Basic Plan for Universal Integrated System
2. Contract DA-36-039-sc-78806

AD Accession No.

Bell Telephone Laboratories, Inc., Whippany, N. J. Project UNICOM (Universal Integrated Communications System) Progress Report for Tenth Quarter, 1 October through 31 December 1961, dated 31 December 1961, 2 vols., 165 pp. Signal Corps Contract DA-36-039-sc-78806.

This report of the tenth quarter of Project UNICOM describes the work accomplished in the following areas: A report on the transmission facilities required for UNICOM Phase I (1965) was prepared. A study of three plans for signaling between subscriber stations and the switching center resulted in the choice of a plan utilizing the message channel for high-speed heading transfer. An initial maintenance and reliability guideline was issued. Objectives for the performance of digital modems and specifications for digital terminating unit basic optional

Abstract Card
UNCLASSIFIED

1. Communications — Basic Plan for Universal Integrated System
2. Contract DA-36-039-sc-78806

Best Available Copy

arrangements and features were included in the SEP. Drafts of BTL work on Sections 3.1 and 3.3 of MIL 188 have been completed. Organization and requirements of major equipment design areas and design of the circuits for the Test Model have been detailed. Functional specifications for the operational programs for the Test Model have been completed.

arrangements and features were included in the SEP. Drafts of BTL work on Sections 3.1 and 3.3 of MIL 188 have been completed. Organization and requirements of major equipment design areas and design of the circuits for the Test Model have been detailed. Functional specifications for the operational programs for the Test Model have been completed.

arrangements and features were included in the SEP. Drafts of BTL work on Sections 3.1 and 3.3 of MIL 188 have been completed. Organization and requirements of major equipment design areas and design of the circuits for the Test Model have been detailed. Functional specifications for the operational programs for the Test Model have been completed.

arrangements and features were included in the SEP. Drafts of BTL work on Sections 3.1 and 3.3 of MIL 188 have been completed. Organization and requirements of major equipment design areas and design of the circuits for the Test Model have been detailed. Functional specifications for the operational programs for the Test Model have been completed.