File Copy

255434

BRL

MEMORANDUM REPORT NO. 1322
FEBRUARY 1961

AN ORDVAC PROGRAM FOR THE TRANSFORMATION OF GEODETIC ELLIPSOIDAL COORDINATES INTO CARTESIAN COORDINATES AND VICE VERSA

A. Roberta Wooten

Department of the Army Project No. 503-06-011
Ordnance Management Structure Code No. 5210.11.143

BALLISTIC RESEARCH LABORATORIES

ABERDEEN PROVING GROUND, MARYLAND

ASTIA AVAILABILITY NOTICE

Qualified requestors may obtain copies of this report from ASTIA.

B A L L I S T I C R E S E A R C H L A B O R A T O R I E S

MEMORANDUM REPORT NO. 1322

FEBRUARY 1961

AN ORDVAC PROGRAM FOR THE TRANSFORMATION OF GEODETIC ELLIPSOIDAL COORDINATES INTO CARTESIAN COORDINATES AND VICE VERSA

A. Roberta Wooten

Ballistic Measurements Laboratory

Department of the Army Project No. 503-06-011
Ordnance Management Structure Code No. 5210.11.143

A B E R D E E N P R O V I N G G R O U N D, M A R Y L A N D

TABLE OF CONTENTS

		PAGE
ABSTRACT		5
I.	MATHEMATICAL BASIC OF COORDINATE TRANSFORMATION	7
II.	FORMULAS USED IN THE PROGRAMMING PHASE	13
	A. Direct Transformation	13
	B. Inverse Transformation	14
III.	RASTER	17
IV.	FLOW CHART	23
V.	THE CODE	27
	A. Program	27
	B. Option	41
VI.	CONSTANTS	43
VII.	DATA	45
	A. Format	45
	B. Input and Output	45
VIII.	SAMPLES	47
	A. Direct Transformation	48
	1. Input (S10-S2)	48
	2. Output (S8-S2)	48
	3. Input (S10-S2)	49
	4. Output (S10-S2)	49
	B. Inverse Transformation	
	1. Input (S10-S2)	50
	2. Output (S8-S2)	50
	3. Input (S10-S2)	51
	4. Output (S10-S2)	51
	C. Direct Transformation (Option For the Photogrammetric Camera Orientation Program Input)	52
	1. Input (S10-S2)	52
	2. Output (S8-S2)	52

TABLE OF CONTENTS (Cont'd)

PAGE

D. Direct Transformation

1. Input (S10-S2) for $(\lambda) = \lambda_o$, $\alpha = 90 - \phi_o$ and $\gamma = 0$. 53

2. Output (S10-S2). 53

E. Inverse Transformation

1. Input (S10-S2) 54

2. Output (S10-S2) 54

B A L L I S T I C R E S E A R C H L A B O R A T O R I E S

MEMORANDUM REPORT NO. 1322

AHWooten/bjk
Aberdeen Proving Ground, Md.
February 1961

AN ORDVAC PROGRAM FOR THE TRANSFORMATION OF GEODETIC ELLIPSOIDAL COORDINATES INTO CARTESIAN COORDINATES AND VICE VERSA

ABSTRACT

The transformation of geodetic ellipsoidal coordinates into Cartesian coordinates and vice versa is programmed for the ORDVAC using a pseudo code - "The One Address Floating Binary Double Precision Code (OFBDP)."

I. THE MATHEMATICAL BASIS OF THE COORDINATE TRANSFORMATION[1]

With reference to Fig. 1, the following notation for the constants of the reference ellipsoid becomes self-explanatory.

Major axis	a
Minor axis	b
Eccentricity	$e^2 = \frac{a^2 - b^2}{a^2} = 1 - (b/a)^2$ (1)

The null meridian is denoted by $(\lambda)_o$

Fig. 2 presents the plane of the meridian λ_1

$$\frac{S_p^2}{a^2} + \frac{Z_p^2}{b^2} = 1 \tag{2}$$

Furthermore,

$$\frac{S_p}{a} = \cos \psi, \text{ where } \psi \text{ is the "reduced latitude".} \tag{3}$$

From the fundamental identity

$$\sin^2 \psi + \cos^2 \psi = 1 \tag{4}$$

and from (2) and (3) it follows that

$$\frac{Z_p}{b} = \sin \psi \tag{5}$$

and again with (2), we obtain

$$\tan \psi = \frac{Z_p}{S_p} \cdot \frac{a}{b} \tag{6}$$

1. Schmid, H. Some Remarks on the Problem of Transforming Geodetic Ellipsoidal Coordinates into Cartesian Coordinates with the Help of The Reduced Latitude, Ordnance Computer Research Report, Ballistic Research Laboratories, Aberdeen Proving Ground, Maryland, Vol. VI, No. 2, 15 April 1959

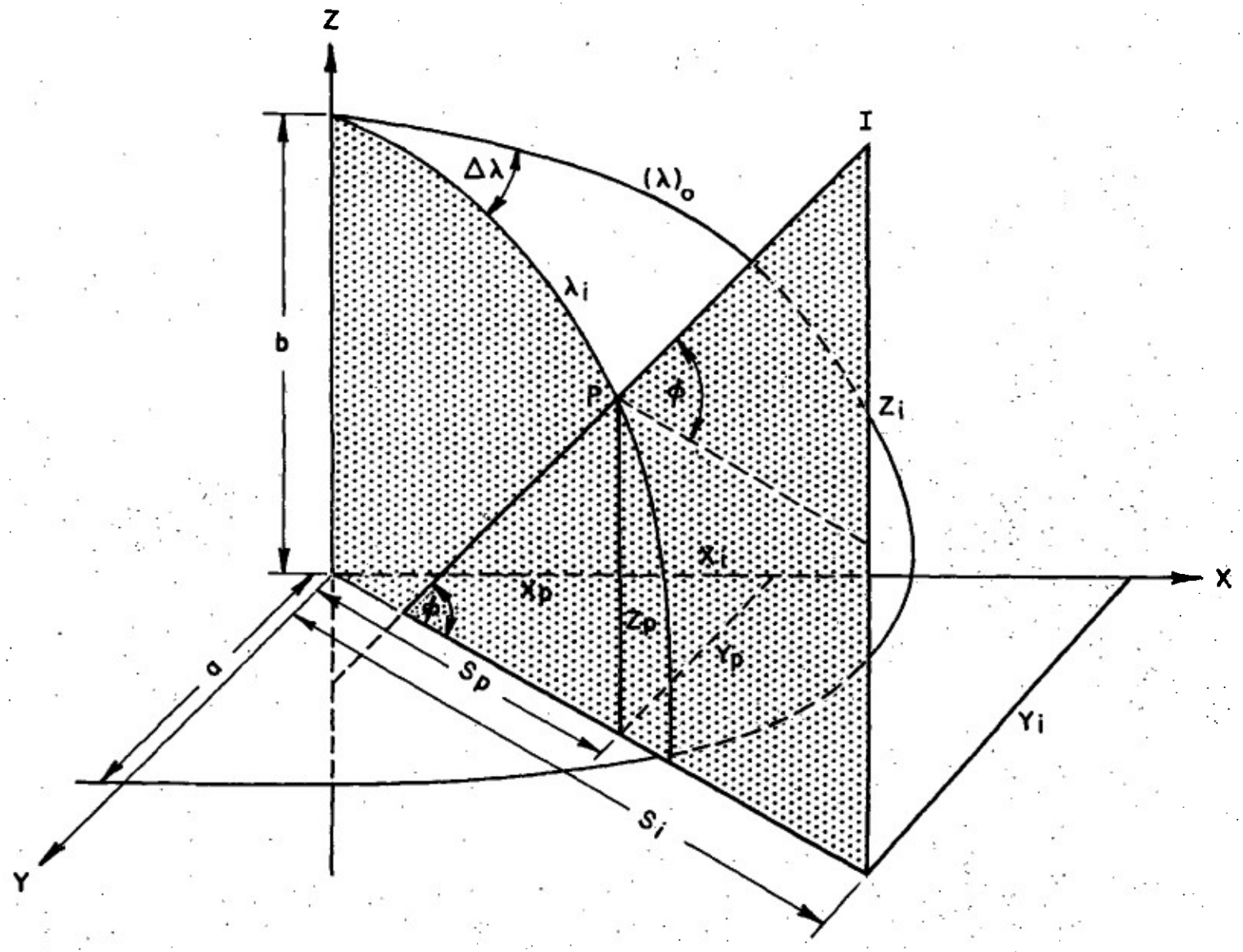

FIGURE I

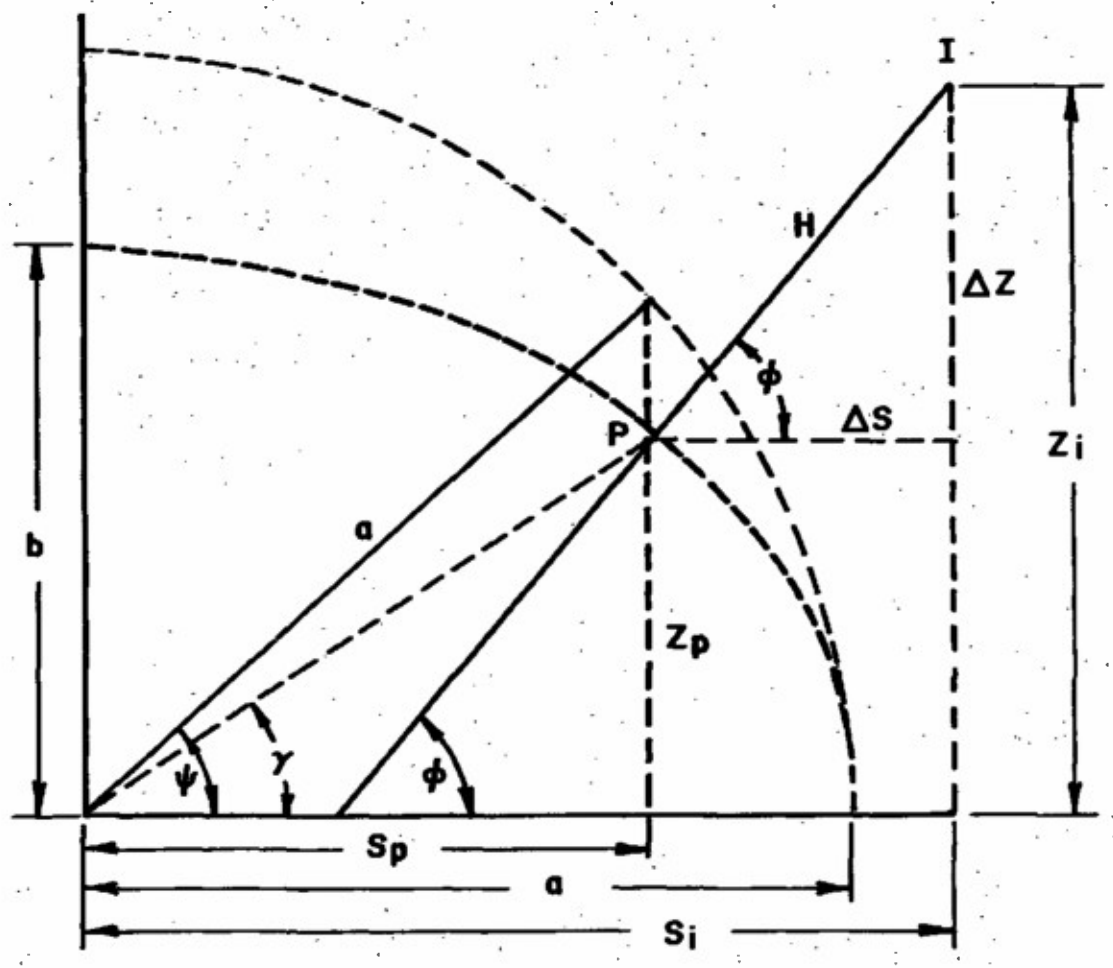

FIGURE 2

which is conveniently written by introducing the geocentric latitude γ, as

$$\tan \psi = \frac{a}{b} \tan \gamma. \tag{7}$$

From $$\tan \phi = \frac{a^2}{b^2} \tan \gamma. \tag{8}$$

follows $$\tan \phi = \frac{a}{b} \tan \psi. \tag{9}$$

Furthermore from Fig. 2

$$\tan \phi = \frac{Z_i - Z_p}{S_i - S_p}. \tag{10}$$

Substituting (3) and (5) into (10), we obtain with (9) and (1)

$$\tan \psi - \frac{ae^2}{S_i} \sin \psi - \frac{b}{a} \cdot \frac{Z_i}{S_i} = 0 \tag{11}$$

which leads to an expression of fourth degree explicit in terms of $\tan \psi$.

In order to avoid a cumbersome solution a well known series is considered.

$$\tan (\psi^o + \Delta\psi^o) = \tan \psi^o + (1 + \tan^2 \psi^o) \Delta\psi + (1 + \tan^2\psi^o) \tan \psi^o \Delta\psi^2 + \ldots\ldots\ldots\ldots \tag{12}$$

where,

$$\psi = \psi^o + \Delta\psi^o. \tag{13}$$

By neglecting all terms higher than first order

$$\Delta\psi^o = - \frac{\tan \psi^o - \sin \psi^o \frac{ae^2}{S_i} - \frac{b}{a} \cdot \frac{Z_i}{S_i}}{1 + \tan^2 \psi^o - \cos \psi^o \frac{ae^2}{S_i}} \tag{14}$$

where,

$$\tan \psi^o = \frac{a}{b} \cdot \frac{Z_i}{S_i} \tag{15}$$

With the above derived formulas geodetic ellipsoidal coordinates can readily be converted into geocentric Cartesian coordinates and vice versa. The transformation here is based on formula (9) using the reduced latitude, ψ , as an auxiliary angle. Thus, fewer iterations are required in determining the value of $\Delta\psi^{o}$ by formula (14) than would be required if similar expressions for $\Delta\gamma$ corrections were derived.

The second phase of coordinate transformation is concerned with the transformation of the geocentric Cartesian coordinates (XYZ), as obtained in the first step, into a system of local Cartesian coordinates (xyz) and vice versa. In order to obtain a high degree of flexibility it is desirable to provide for the possibility of referring the geocentric coordinate system to an arbitrarily chosen meridian, denoted by (λ). For a coordinate transformation to be suited for geodetic and photogrammetric purposes, particular attention should be given to the fact that generally the position of any local point of origin will be given by geodetic ellipsoidal coordinates denoted by ϕ_o, λ_o, H_o. By introducing $(\lambda) = \lambda_o$ the geocentric Cartesian system becomes oriented in such a way that its X-axis is situated in the meridian plane of the arbitrarily chosen point of origin of the local Cartesian system. During the computations, first the Cartesian geocentric coordinates of the point of origin $(X_oY_oZ_o)$ are computed. In case the above described rotation $(\lambda_1 - \lambda_o)$ is applied, Y_o = zero. Next the geocentric system is translated parallel to itself, into the origin of the local system by the translations, $X_oY_oZ_o$. The x'y'z' - system thus obtained must now be oriented by three additional rotations. These rotations should be made in such a way that the orientation of the local system can be made to be significant in terms of commonly used geodetic parameters. First, we rotate around the y-axis for an angle α. With Y_o = zero and $\alpha = (90 - \phi_o)$ the xy-plane becomes parallel to a plane tangent to the ellipsoid at the sub-origin point. Second, we rotate around the once rotated z' - axis (β - rotation). If the xy-plane is tangent to the ellipsoid at the sub-origin point, this step corresponds to the conventional azimuth rotation. The third rotation, denoted by γ, is

executed around the twice rotated x' - axis. In most geodetic problems γ will equal zero. The necessary computations, described above are made by the following well known formulas which transfer one set of Cartesian coordinates into another:

A. Direct Transformation

$$
\begin{aligned}
x_i = &+ x_i' (\cos \alpha \cos \beta) \\
&+ y_i' (\sin \beta) \\
&- z_i' (\sin \alpha \cos \beta)
\end{aligned}
$$

$$
\begin{aligned}
y_i = &+ x_i' (\sin \alpha \sin \gamma - \cos \alpha \sin \beta \cos \gamma) \\
&+ y_i' (\cos \beta \cos \gamma) \\
&+ z_i' (\cos \alpha \sin \gamma + \sin \alpha \sin \beta \cos \gamma)
\end{aligned}
$$

$$
\begin{aligned}
z_i = &+ x_i' (\sin \alpha \cos \gamma + \cos \alpha \sin \beta \sin \gamma) \\
&- y_i' (\cos \beta \sin \gamma) \\
&+ z_i' (\cos \alpha \cos \gamma - \sin \alpha \sin \beta \sin \gamma)
\end{aligned}
$$

B. Inverse Transformation

$$
\begin{aligned}
x_i' = &+ x_i (\cos \alpha \cos \beta) \\
&+ y_i (\sin \alpha \sin \gamma - \cos \alpha \sin \beta \cos \gamma) \\
&+ z_i (\sin \alpha \cos \gamma + \cos \alpha \sin \beta \sin \gamma)
\end{aligned}
$$

$$
\begin{aligned}
y_i' = &+ x_i (\sin \beta) \\
&+ y_i (\cos \beta \cos \gamma) \\
&- z_i (\cos \beta \sin \gamma)
\end{aligned}
$$

$$
\begin{aligned}
z_i' = &- x_i (\sin \alpha \cos \beta) \\
&+ y_i (\cos \alpha \sin \gamma + \sin \alpha \sin \beta \cos \gamma) \\
&+ z_i (\cos \alpha \cos \gamma - \sin \alpha \sin \beta \sin \gamma)
\end{aligned}
$$

II. FORMULAS USED IN THE PROGRAMMING PHASE

A. 1. Direct Transformation

a. Given: The ellipsoidal coordinates of the point of origin O (ϕ_o, λ_o, H_o) and I, (ϕ_i, λ_i, H_i) where longitudes λ_o and λ_i are referred to the null meridian denoted by $(\lambda)_o$.

b. Compute the Cartesian geocentric coordinates (X_o, Y_o, Z_o) and X_i, Y_i, Z_i, whereby the + X-axis passes through the point $\phi = 0$, $\lambda = (\lambda)$ and the + Z-axis passes through the point $\phi = +90^o$.

(1) From (9) $\tan \psi = \frac{b}{a} \tan \phi$ (16)

(3) $S_p = a \cos \psi$ (17)

(5) $Z_p = b \sin \psi$ (18)

(2) From Fig. 2

$$S_i = S_p + H \cos \phi \tag{19}$$

$$X_i = S_i \cos \left[\lambda_i - (\lambda)\right] \tag{20}$$

$$Y_i = S_i \sin \left[\lambda_i - (\lambda)\right] \tag{21}$$

$$Z_i = Z_p + H \sin \phi \tag{22}$$

c. Transform the Cartesian geocentric coordinates X_i, Y_i, Z_i to local Cartesian coordinates x_i, y_i, z_i.

(1) Translations

$$x_i' = X_i - X_o \tag{23}$$

$$y_i' = Y_i - Y_o \tag{24}$$

$$z_i' = Z_i - Z_o \tag{25}$$

(2) Rotations

$$\begin{aligned} x_i = &+ x_i' (\cos \alpha \cos \beta) \\ &+ y_i' (\sin \beta) \\ &- z_i' (\sin \alpha \cos \beta) \end{aligned} \tag{26}$$

$$y_i = + x_i' (\sin\alpha \sin\gamma - \cos\alpha \sin\beta \cos\gamma) \quad (27)$$
$$+ y_i' (\cos\beta \cos\gamma)$$
$$+ z_i' (\cos\alpha \sin\gamma + \sin\alpha \sin\beta \cos\gamma)$$

$$z_i = + x_i' (\sin\alpha \cos\gamma + \cos\alpha \sin\beta \sin\gamma) \quad (28)$$
$$- y_i' (\cos\beta \sin\gamma)$$
$$+ z_i' (\cos\alpha \cos\gamma - \sin\alpha \sin\beta \sin\gamma)$$

B. 2. Inverse Transformation

a. Given: The local Cartesian coordinates of point I (x_i, y_i, z_i) and the Cartesian geocentric coordinates of the corresponding point of Origin O (X_o, Y_o, Z_o)

b. Transform the local Cartesian coordinates x_i, y_i, z_i into Cartesian geocentric coordinates X_i, Y_i, Z_i.

(1) Rotations

$$x_i' = + x_i (\cos\alpha \cos\beta) \quad (29)$$
$$+ y_i (\sin\alpha \sin\gamma - \cos\alpha \sin\beta \cos\gamma)$$
$$+ z_i (\sin\alpha \cos\gamma + \cos\alpha \sin\beta \sin\gamma)$$

$$y_i' = + x_i (\sin\beta) \quad (30)$$
$$+ y_i (\cos\beta \cos\gamma)$$
$$- z_i (\cos\beta \sin\gamma)$$

$$z_i' = - x_i (\sin\alpha \cos\beta) \quad (31)$$
$$+ y_i (\cos\alpha \sin\gamma + \sin\alpha \sin\beta \cos\gamma)$$
$$+ z_i (\cos\alpha \cos\gamma - \sin\alpha \sin\beta \sin\gamma)$$

(2) Translations

$$X_i = x_i' + X_o \tag{32}$$

$$Y_i = y_i' + Y_o \tag{33}$$

$$Z_i = z_i' + Z_o \tag{34}$$

c. Compute the corresponding ellipsoidal coordinates ϕ_i, λ_i, H_i.

From Fig. 2

$$\tan \Delta\lambda = \frac{Y_i}{X_i} \tag{35}$$

$$\text{and } \lambda_i = (\lambda) + \Delta\lambda \tag{36}$$

Furthermore,

$$S_i = (X_i^2 + Y_i^2)^{\frac{1}{2}} \tag{37}$$

From (15)

$$\tan \psi^o = \frac{Z_i}{S_i} \cdot \frac{a}{b} \tag{38}$$

From (14)

$$\Delta\psi^o = - \frac{\tan \psi^o - \sin \psi^o \frac{ae^2}{S_i} - \frac{b}{a} \cdot \frac{Z_i}{S_i}}{1 + \tan^2\psi^o - \cos \psi^o \cdot \frac{ae^2}{S_i}} \tag{39}$$

From (13)

$$\psi = \psi^o + \Delta\psi^o \tag{40}$$

From (9)

$$\tan \phi_i = \tan \psi \cdot \frac{a}{b} \tag{41}$$

From Fig. 2

$$H = \frac{S_i - a \cos \psi}{\cos \phi_i} \tag{42}$$

III. RASTER
(Memory Display)

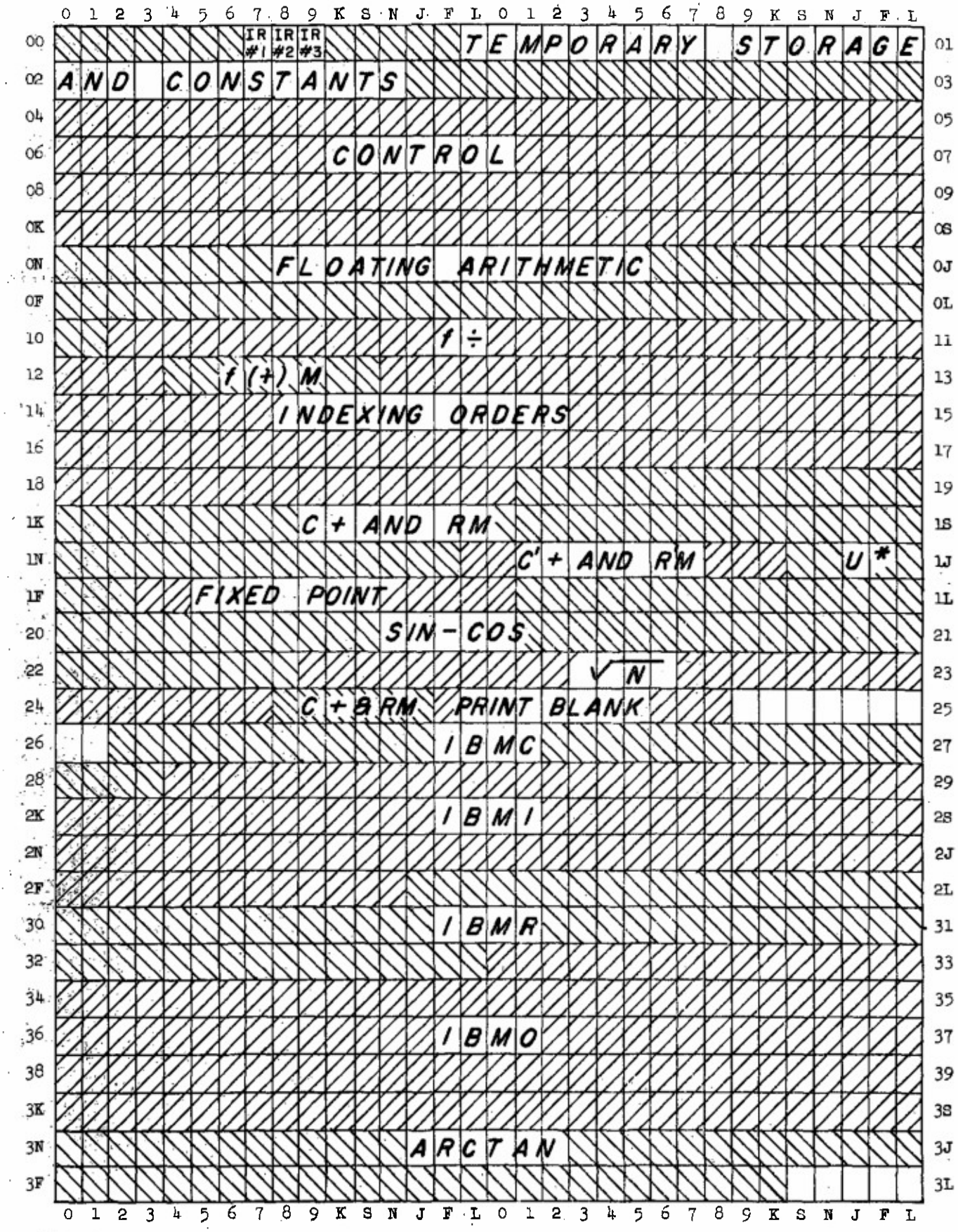

ORDBG-1457
28 Mar 52

ARMY ABERDEEN PROVING GROUND, MD.

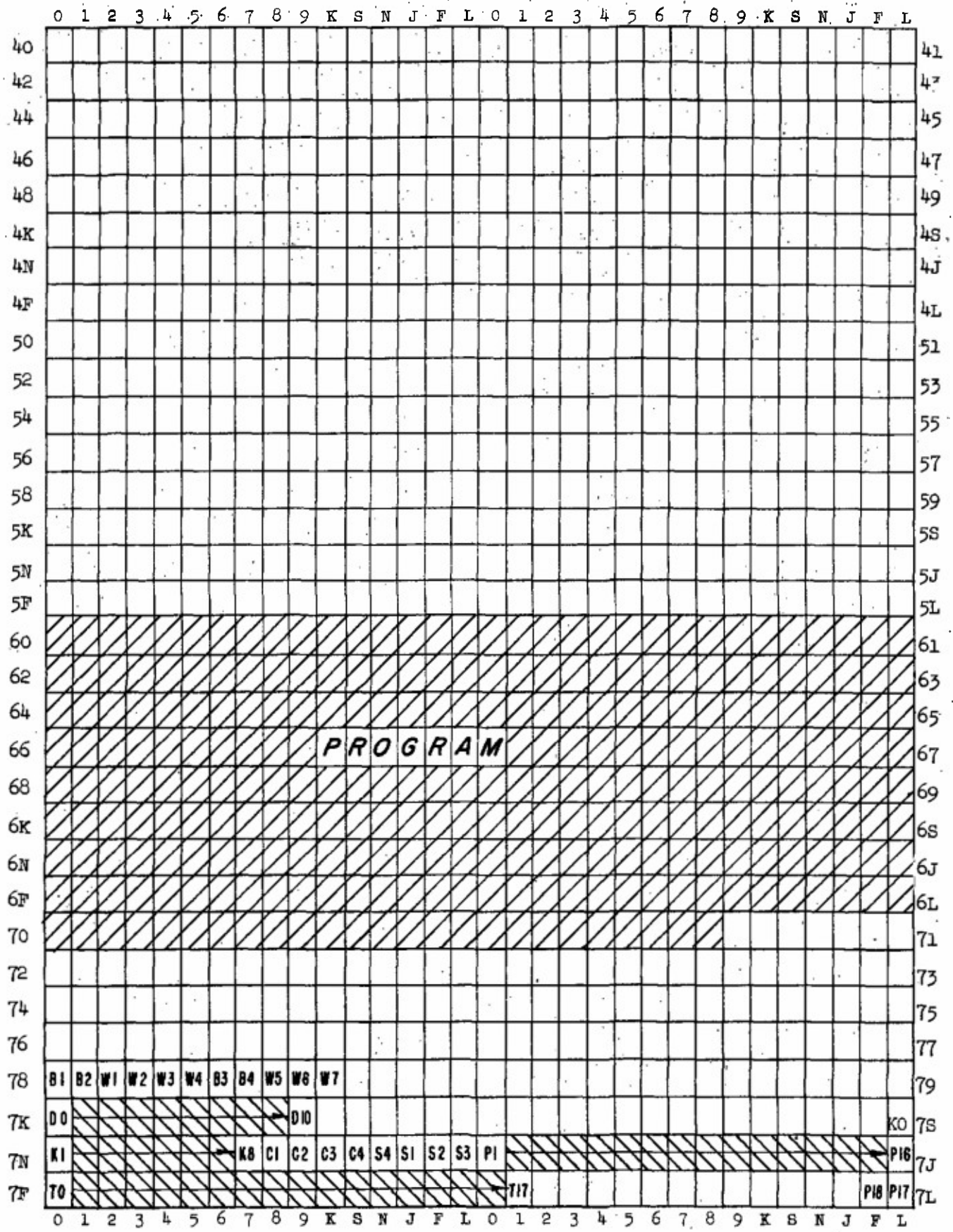
0 1 2 3 4 5 6 7 8 9 K S N J F L 0 1 2 3 4 5 6 7 8 9 K S N J F L
40 41
42 43
44 45
46 47
48 49
4K 4S
4N 4J
4F 4L
50 51
52 53
54 55
56 57
58 59
5K 5S
5N 5J
5F 5L
60 61
62 63
64 65
66 67
68 69
6K 6S
6N 6J
6F 6L
70 71
72 73
74 75
76 77
78 79
7K 7S
7N 7J
7F 7L
PROGRAM
B1 B2 W1 W2 W3 W4 B3 B4 W5 W6 W7
D0 D10 K0
K1 K8 C1 C2 C3 C4 S4 S1 S2 S3 P1 P16
T0 T17 P18 P17

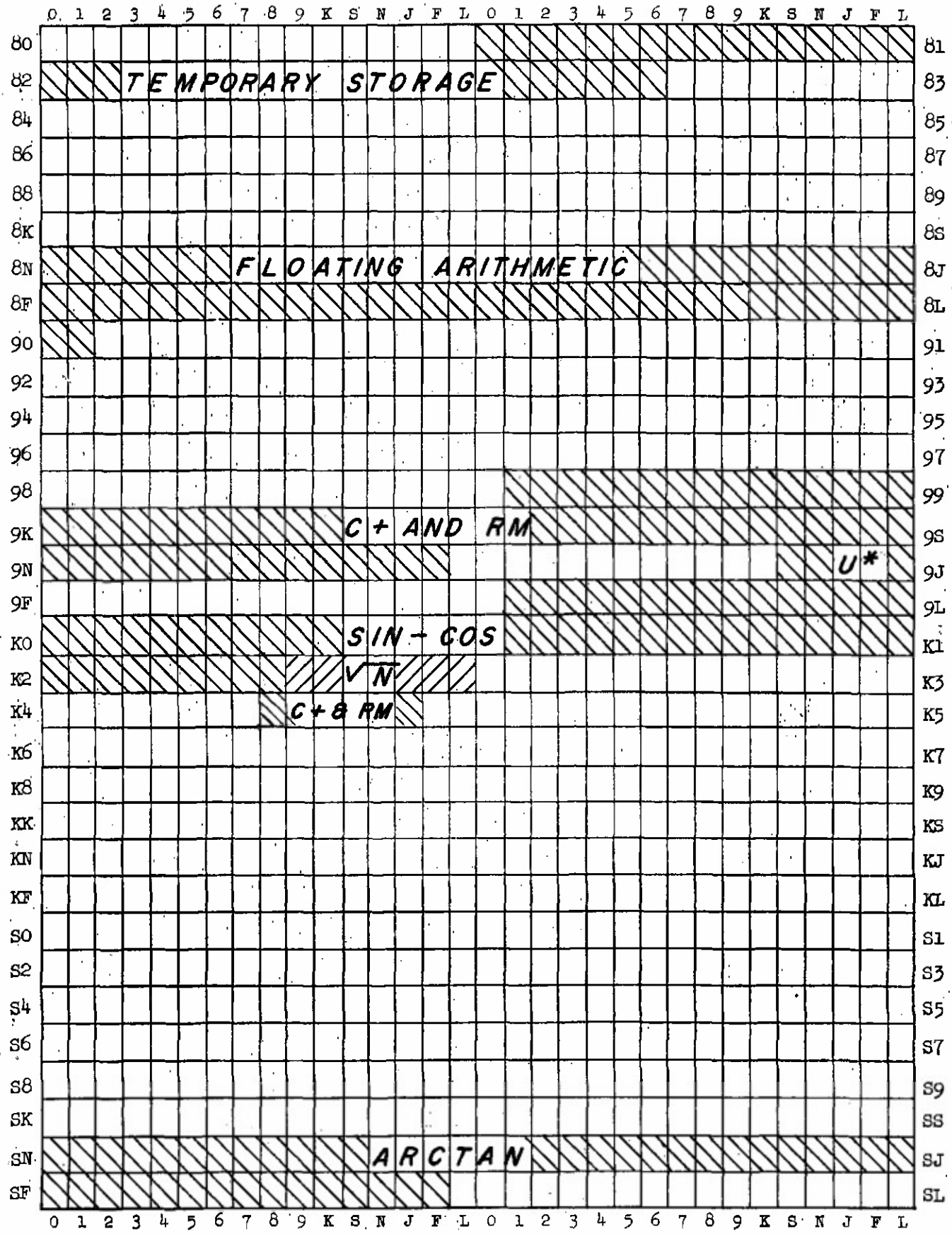
0 1 2 3 4 5 6 7 8 9 K S N J F L 0 1 2 3 4 5 6 7 8 9 K S N J F L
80
81
82
83
84
85
86
87
88
89
8K
8S
8N
8J
8F
8L
90
91
92
93
94
95
96
97
98
99
9K
9S
9N
9J
9F
9L
K0
K1
K2
K3
K4
K5
K6
K7
K8
K9
KK
KS
KN
KJ
KF
KL
S0
S1
S2
S3
S4
S5
S6
S7
S8
S9
SK
SS
SN
SJ
SF
SL
TEMPORARY STORAGE
FLOATING ARITHMETIC
C+ AND RM
U*
SIN - COS
√N
C+& RM
ARCTAN

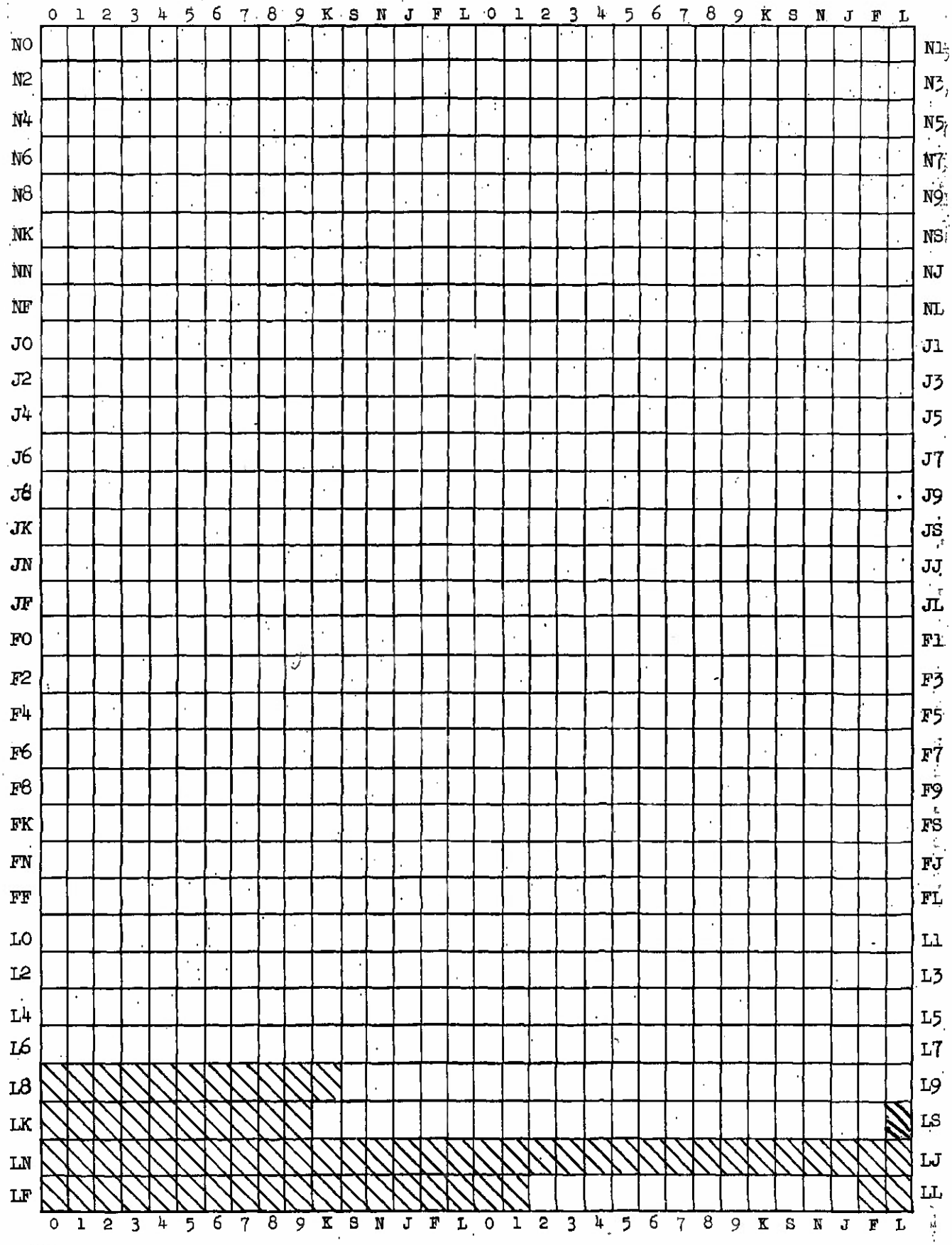
0 1 2 3 4 5 6 7 8 9 K S N J F L 0 1 2 3 4 5 6 7 8 9 K S N J F L
N0 N1 N2 N3 N4 N5 N6 N7 N8 N9 NK NS NN NJ NF NL
J0 J1 J2 J3 J4 J5 J6 J7 J8 J9 JK JS JN JJ JF JL
F0 F1 F2 F3 F4 F5 F6 F7 F8 F9 FK FS FN FJ FF FL
L0 L1 L2 L3 L4 L5 L6 L7 L8 L9 LK LS LN LJ LF LL
0 1 2 3 4 5 6 7 8 9 K S N J F L 0 1 2 3 4 5 6 7 8 9 K S N J F L

IV. FLOW CHART

INVERSE TRANSFORMATION

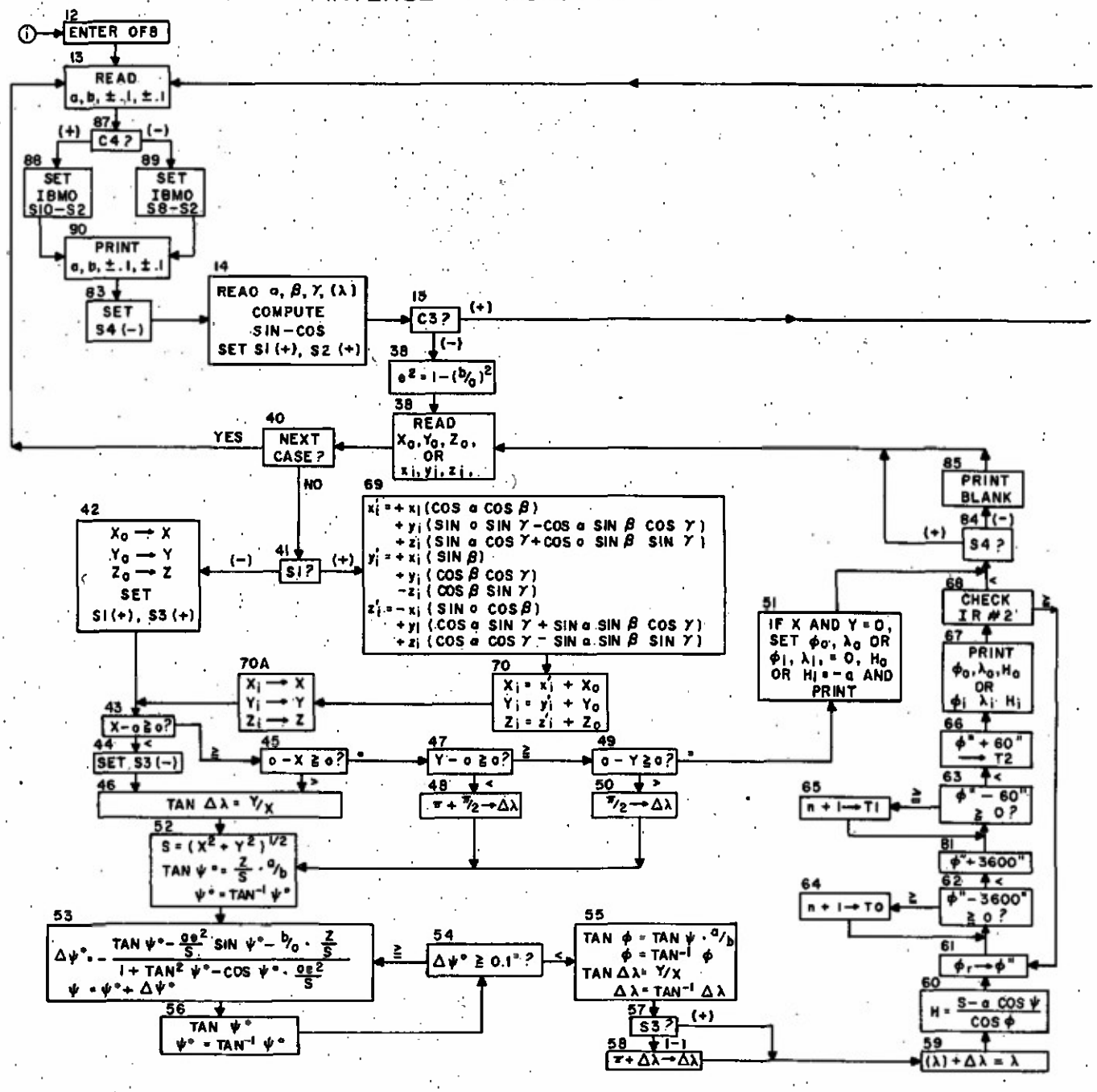

DIRECT TRANSFORMATION

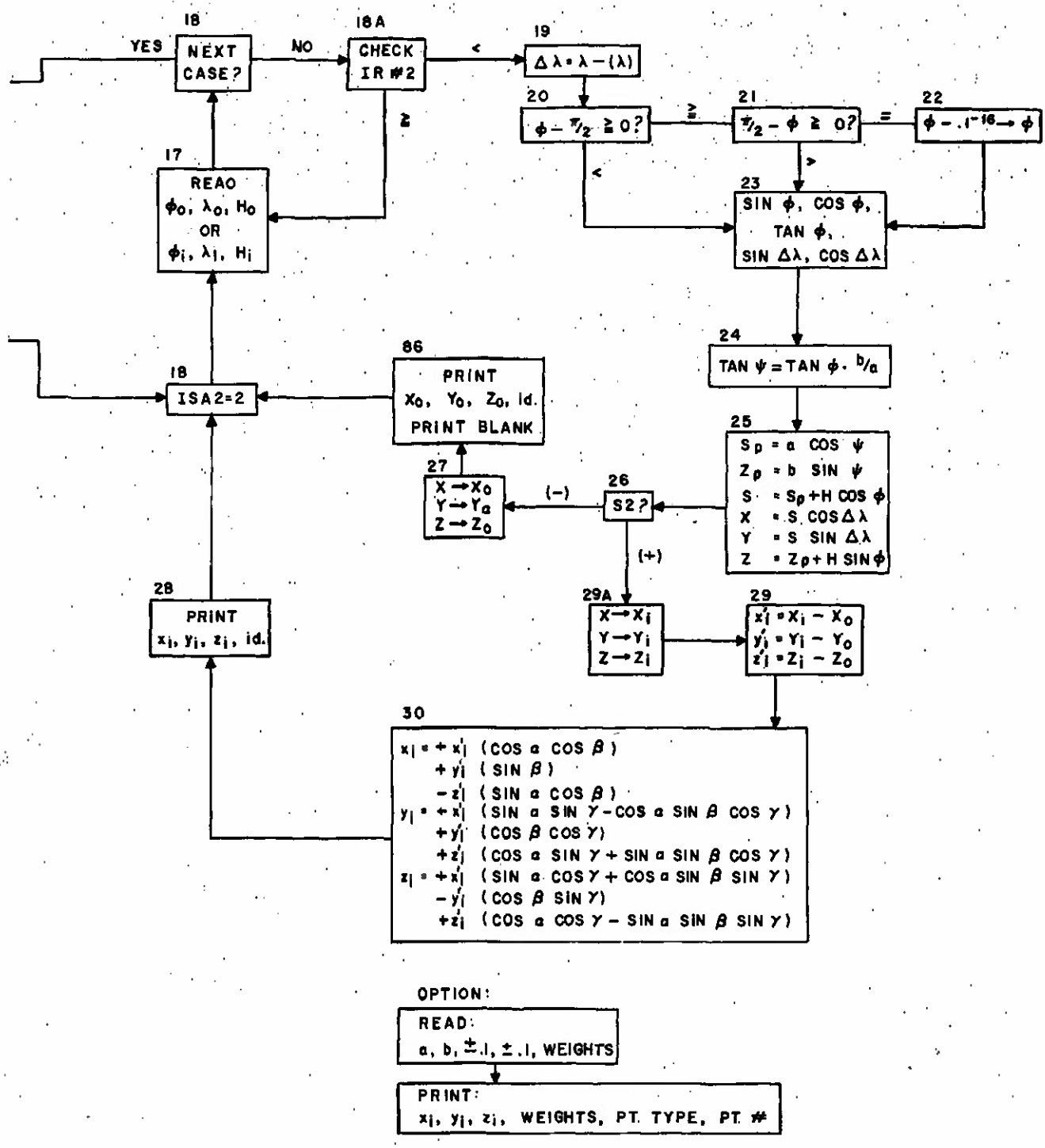

OPTION:

READ:
a, b, ±.1, ±.1, WEIGHTS

PRINT:
x_i, y_i, z_i, WEIGHTS, PT. TYPE, PT. #

V. THE CODE

A. PROGRAM

"The One Address Floating Binary Double Precision (OFBDP)" devised by Lloyd Campbell, Computing Laboratory, Ballistic Research Laboratories, was applied to this problem. Instruction on the use of the code may be found in BRL Report No. 997, October 1956, "Programming and Coding for ORDVAC", by Tadeusz Leser and Michael Romanelli.

SEQUENCE	CODE	ADDRESS	ORDER	INDEX	DESCRIPTION
12.1	K40600	600	+600		Enter OFB
.2	N00040		U OFB		
.3	NN0604	601	fU 13.1		
.4	6002FS		M 2FS		
.5	K80781	602	+ B2		
.6	6002FN		M 2FN		Unused
.7	NN0604	603	fU 13.1		
.8	SN0262		U* IBMC		
13.1	000783	604	f + W2		Read a,b, ± .1, ± .1
.2	SN0262		U* IBMC		
.3	NN070K	605	fU 87.1		
.4	SN02FJ		U* IBMC		Unused
.5	NN0700	606	fU 83.1		
14.1	441004		ISA	1	
.2	000784	607	f + W3		
.3	SN0262		U* IBMC		
.4	0007F0	608	f + T0		
.5	6807N0		f x K1		
.6	1007J0	609	fM P1		
.7	0007F1		f + T1		Read α, β, γ, (λ) in
.8	6807N1	60K	f x K2		
.9	FN07J0		f(+)MP1		degrees, minutes,
.10	0007F2	60S	f + T2		
.11	6807N2		f x K3		seconds. Convert to
.12	FN07J0	60N	f(+)MP1		
.13	0007J0		f + P1		radians. Compute
.14	0007J0	60J	f + P1		
.15	SN01L1		U* sin-cos		sin and cos.
.16	1017J1	60F	fM P2	1	
.17	000017		f + 017		
.18	1017J2	60L	fM P3	1	
.19	F81001		IIA	1	
14.20	F01607	610	IfC 14.7	1	
.21	6407NK		f|-| C3		
.22	1007NJ	611	fM S1		Set S1(-)
.23	6407NK		f|-|C3		
.24	1007NF	612	fM S2		Set S2(-)
15.1	0007NK		f + C3		
.2	2N069N	613	fC 16.1		≧ 0
.3	NN0614		fU 38.1		≧ 0
38.1	0007N9	614	f + C2		
.2	7807N8		f ÷ C1		
.3	1007J7	615	fM P8		$(b/a)^2$
.4	6807J7		f x P8		
.5	1007J7	616	fM P8		
.6	0007N3		f + K4		

SEQUENCE	CODE	ADDRESS	ORDER	INDEX	DESCRIPTION
38.7	0407J7	617	f(-)P8		
.8	1007J7		fM P8		$e^2 = 1 - (b/a)^2$
39.1	000784	618	f + W3		Read X_o, Y_o, Z_o, or
.2	SN0262		U*IBMC		x_i, y_i, z_i
40.1	0007F4	619	f + T4		
.2	4N061K		fC'41.1		≥ 0
.3	NN0604	61K	fU 13.1		
41.1	0007NJ		f + S1		< 0
.2	2N067N	61S	fC 69.1		Test S1
42.1	F407NK		f|+|C3		
.2	1007NJ	61N	fM S1		Set S1 (+)
.3	1007NL		fM S3		Set S3 (+)
.4	441005	61J	ISA	1	$X_o \rightarrow X_i$
.5	0017F0		f + T0	1	$Y_o \rightarrow Y_i$
.6	1017K0	61F	fM Do	1	$Z_o \rightarrow Z_i$
.7	L0161J		IfC' 42.5	1	
43.1	3007L0	61L	OM T16		
.2	0007F0		f + T0		
.3	0407L0	620	f(-)T16		
.4	4N0622		fC' 45.1		
44.1	6407NK	621	f|-|C3		
.2	1007NL		fM S3		Set S3 (-)
.3	1N0628	622	fU' 46.1		
45.1	0007L0		f + T16		
.2	0407F0	623	f(-)T0		
.3	4N0624		fC' 47.1		
.4	1N0628	624	fU' 46.1		Test for quadrant of
47.1	0007F1		f + T1		$\Delta\lambda$ angle
.2	0407L0	625	f(-)T16		
.3	4N0626		fC' 49.1		
.4	NN062N	626	fU 48.1		
49.1	0007L0		f + T16		
.2	0407F1	627	f(-)T1		
.3	2N0631		fC 51.1		
.4	NN062L	628	fU 50.1		
46.1	0007F1		f + T1		
.2	7807F0	629	f ÷ T0		
.3	1007LF		fM P18		tan $\Delta\lambda$ = Y/X
.4	0007LF	62K	f + P18		
.5	SN03N0		U* arctan		
.6	1007LF	62S	fM P18		$\Delta\lambda$
.7	NN0636		fU 52.1		

SEQUENCE	CODE	ADDRESS	ORDER	INDEX	DESCRIPTION
48.1	0007N5	62N	f + K6		
.2	7807N7		f ÷ K8		
.3	1007LF	62J	fM P18		$\pi + \frac{\pi}{2}$
.4	N407N5		f(+)K6		
.5	1007LF	62F	fM P18		
.6	NN0636		fU 52.1		
50.1	0007N5	62L	f + K6		
.2	7807N7		f ÷ K8		
.3	1007LF	630	fM P18		$\frac{\pi}{2}$
.4	NN0636		fU 52.1		
51.1	443002	631	ISA	3	
.2	3007F0		OM T0		
.3	3007F1	632	OM T1		
.4	3007F2		OM T2		If X and Y = 0, set
.5	2407N8	633	f - C1		ϕ_o, λ_o, or ϕ_1, λ_1 = 0,
.6	1007F3		fM T3		
.7	000784	634	f + W3		H_o or H_1 = -a and
.8	SN02FJ		U*IBMR		print.
.9	L03631	635	IfC' 51.1	3	
.10	NN0702		fC 84.1		
52.1	0007F0	636	f + T0		
.2	6807F0		f x T0		
.3	1007J8	637	fM P9		
.4	0007F1		f + T1		
.5	6807F1	638	f x T1		$S = (X^2 + Y^2)^{1/2}$
.6	FN07J8		f(+)M P9		
.7	0007J8	639	f + P9		
.8	SN0229		U* $\sqrt{}$		
.9	1007J8	63K	fM P9		
.10	0007F2		f + T2		
.11	7807J8	63S	f ÷ P9		
.12	1007J9		fM P10		
.13	0007N8	63N	f + C1		$\tan \psi^o = \frac{Z}{S} \cdot \frac{a}{b}$
.14	7807N9		f ÷ C2		
.15	6807J9	63J	f x P10		
.16	1007JS		fM P12		
.17	0007JS	63F	f + P12		
.18	SN03N0		U* arctan		
.19	1007JN	63L	fM P13		ψ^o
.20	1007JN		fM P13		
53.1	0007JN	640	f + P13		
.2	SN01L1		U*sin-cos		
.3	1007JJ	641	fM P14		$\sin \psi^o$
.4	000017		f +017		

SEQUENCE	CODE	ADDRESS	ORDER	INDEX	DESCRIPTION
53.5	1007JF	642	fM P15		$\cos \psi^o$
.6	0007N8		f + C1		
.7	6807J7	643	f x P8		
.8	7807J8		f ÷ P9		
.9	1007F6	644	fM T6		
.10	0007N9		f + C2		
.11	7807N8	645	f ÷ C1		
.12	1007F7		fM T7		
.13	0007N8	646	f + C1		
.14	7807N9		f ÷ C2		
.15	1007JK	647	fM P11		
.16	0007JF		f + P15		
.17	6807F6	648	f x T6		$\Delta \psi^o = \dfrac{\tan \psi^o - \frac{ae^2}{S} \sin \psi^o - \frac{b}{a} \cdot \frac{Z}{S}}{1 + \tan^2 \psi^o - \cos \psi^o \cdot \frac{ae^2}{S}}$
.18	1007F9		fM T9		
.19	0007JS	649	f + P12		
.20	6807JS		f x P12		
.21	N407N3	64K	f(+)K4		
.22	0407F9		f(-)T9		
.23	1007F9	64S	fM T9		
.24	0007F6		f + T6		
.25	6807JJ	64N	f x P14		
.26	1007FK		fM T10		
.27	0007F7	64J	f + T7		
.28	6807J9		f x P10		
.29	1007FS	64F	fM T11		
.30	2407JS		f - P12		
.31	N407FK	64L	f(+)T10		
.32	N407FS		f(+)T11		
.33	7807F9	650	f ÷ T9		
.34	1007JL		fM P16		$\Delta \psi^o$
.35	0007JN	651	f + P13		$\psi = \psi^o + \Delta \psi^o$
.36	N407JL		f(+) P16		
.37	1007JN	652	fM P13		
.38	NN0655		fU 56.1		
54.1	F407JL	653	f(+)P16		
.2	0407N4		f(-)K5		
.3	2N0640	654	fC 53.1		
.4	NN065S		fU 55.1		
56.1	0007JN	655	f + P13		
.2	SN01L1		U* sin-cos		
.3	1007JJ	656	fM P14		$\sin \psi$
.4	000017		f + 017		
.5	1007JF	657	fM P15		$\cos \psi$
.6	0007JJ		f + P14		

SEQUENCE	CODE	ADDRESS	ORDER	INDEX	DESCRIPTION
56.7	7807JF	658	f ÷ P15		
.8	1007JS		fM P12		tan ψ
.9	0007JS	659	f + P12		
.10	SN03N0		U* arctan		
.11	1007JN	65K	fM P13		ψ
.12	NN0653		fU 54.1		
55.1	0007JS	65S	f + P12		
.2	6807JK		f x P11		
.3	1007JS	65N	fM P12		$\tan \phi = \tan \psi \cdot \frac{a}{b}$
.4	0007JS		f + P12		
.5	0007JS	65J	f + P12		
.6	SN03N0		U* arctan		
.7	1007FF	65F	fM T14		ϕ
.8	0007F1		f + T1		
.9	7807F0	65L	f ÷ T0		$\tan \Delta\lambda = \frac{Y}{X}$
.10	1007FN		fM T12		
.11	0007FN	660	f + T12		
.12	SN03N0		U* arctan		
.13	1007LF	661	fM P18		$\Delta\lambda$
57.1	0007NL		f + S3		
.2	4N0664	662	fC' 59.1		
.3	NN0663		fU 58.1		
58.1	0007LF	663	f + P18		
.2	N407N5		f(+)K6		
.3	1007LF	664	fM P18		$\pi + \Delta\lambda$
59.1	0007J0		f + P1		
.2	N407LF	665	f(+)P18		
.3	1007FL		fM T15		$(\lambda) + \Delta\lambda = \lambda$
60.1	0007FF	666	F + T14		
.2	SN01L1		U* sin-cos		
.3	000017	667	f + 017		
.4	1007FN		fM T12		cos ϕ
.5	2407N8	668	f - C1		
.6	6807JF		f x P15		
.7	N407J8	669	f(+)P9		$H = \frac{S - a \cos \psi}{\cos \phi}$
.8	7807FN		f ÷ T12		
.9	1007F3	66K	fM T3		
.10	441002		ISA	1	
61.1	0017FF	66S	f + T14	1	
.2	7807N0		f ÷ K1		
.3	1017FF	66N	fM T14	1	
.4	0007N6		f + K7		
.5	6807N6	66J	f x K7		
.6	1007FK		fM T0		

SEQUENCE	CODE	ADDRESS	ORDER	INDEX	DESCRIPTION
61.7	6817FF	66F	f x T14	1	
.8	1007FS		fM T11		
.9	3007F0	66L	OM T0		
.10	3007F1		OM T1		
62.1	0007FS	670	f + T11		
.2	0407FK		f(-)T10		
62.3	1007FS	671	fM T11		
.4	4N0672		fC' 64.1		
.5	NN06LS	672	fU 81.1		
64.1	0007F0		f + T0		
.2	N407N3	673	f(+) K4		Convert ϕ_o, λ_o
.3	1007F0		fM T0		
.4	NN0670	674	fU 62.1		or ϕ_i, λ_i to degrees,
63.1	0007FS		f + T11		minutes and seconds.
.2	0407N6	675	f(-) K7		
.3	1007FS		fM T11		
.4	2N0677	676	fC 65.1		
.5	NN0679		fU 66.1		
65.1	0007F1	677	f + T1		
.2	N407N3		f(+)K4		
.3	1007F1	678	fM T1		
.4	1N0674		fU' 63.1		
66.1	N407N6	679	f(+)K7		
.2	1007F2		fM T2		
67.1	000784	67K	f + W3		Print ϕ_o, λ_o, H_o,
.2	SN02FJ		U*IBMR		or ϕ_i, λ_i, H_i
68.1	F0166S	67S	IfC 61.1	1	
.2	NN0702		fU 84.1		
69.1	2407J2	67N	f-P3		
.2	6807J3		f x P4		
.3	6807J6	67J	f x P7		
.4	1007FK		fM T10		
.5	0007J1	67F	f + P3		
.6	6807J5		f x P6		
.7	FN07FK	67L	f(+)MT10		
.8	0007F1		f + T1		
.9	6807FK	680	f x T10		
.10	1007FK		fM T10		
.11	0007J2	681	f + P3		$x'_i = x_i(\cos\alpha \cos\beta)$
.12	6807J4		f x P5		
.13	6807F0	682	f x T0		$+ y_i(\sin\alpha \sin\gamma - \cos\alpha$
.14	FN07FK		f(+)MT10		$\sin\beta \cos\gamma)$
.15	1N06LN	683	fU'69A.1		$+ z_i(\sin\alpha \cos\gamma + \cos$
.16	N407L1		f(+)T17		$\alpha \sin\beta \sin\gamma)$

SEQUENCE	CODE	ADDRESS	ORDER	INDEX	DESCRIPTION
69.17	6807F2	684	f x T2		
.18	FN07EK		f(+)MT10		
.19	2407J4	685	f-P5		
.20	6807J5		f x P6		
.21	6807F2	686	f x T2		
.22	1007FS		fM T11		
.23	0007J4	687	f + P5		
.24	6807J6		f x P7		$y_1' = x_1(\sin\beta)$
.25	6807F1	688	f x T1		$+ y_1(\cos\beta\cos\gamma)$
.26	FN07FS		f(+)MT11		
.27	0007J3	689	f + P4		$- z_1(\cos\beta\sin\gamma)$
.28	6807F0		f x T0		
.29	FN07FS	68K	f(+)MT11		
.30	2407F0		f - T0		
.31	6807J1	68S	f x P2		
.32	6807J4		f x P5		
.33	1007FN	68N	fM T12		
.34	0007J1		f + P2		
.35	6807J3	68J	f x P4		
.36	6807J6		f x P7		
.37	1007FJ	68F	fM T13		
.38	1007J2		f + P3		
.39	6807J5	68L	f x P6		
.40	FN07FJ		f(+)MT13		
.41	0007F1	690	f + T1		
.42	6807FJ		f x T13		
.43	FN07FN	691	f(+)MT12		
.44	2407J1		f - P2		$z_1' = -x_1(\sin\alpha\cos\beta)$
.45	6807J3	692	f x P4		$+ y_1(\cos\alpha\sin\gamma +$
.46	6807J5		f x P6		$\sin\alpha\sin\beta\cos\gamma)$
.47	1007FJ	693	fM T13		$+ z_1(\cos\alpha\cos\gamma -$
.48	0007J2		f + P3		$\sin\alpha\sin\beta\sin\gamma)$
.49	6807J6	694	f x P7		
.50	FN07FJ		f(+)MT13		
.51	0007FJ	695	f + T13		
.52	6807F2		f x T2		
.53	FN07FN	696	f(+)MT13		
70.1	0007FK		f + T10		
.2	N407K0	697	f(+)D0		$X_1 = x_1' + X_0 \longrightarrow X$
.3	1007F0		fM T0		
.4	0007FS	698	f + T11		
.5	N407K1		f(+)D1		
.6	1007F1	699	fM T1		$Y_1 = y_1' + Y_0 \longrightarrow Y$
.7	0007FN		f + T12		

SEQUENCE	CODE	ADDRESS	ORDER	INDEX	DESCRIPTION
70.8	N407K2	69K	f(+)D2		$Z_i = z_i' + Z_o \longrightarrow Z$
.9	1007F2		fM T2		
.10	NN061L	69S	fU 43.1		
.11	NN061L		fU 43.1		
16.1	442002	69N	ISA	2	
.2	000784		f + W3		
17.1	000784	69J	f + W3		Read ϕ_o, λ_o, H_o or
.2	SN0262		U*IBMC		ϕ_1, λ_1, H_1
17.3	0007F0	69F	f + T0		
.4	6807N0		f x K1		
.5	1027K0	69L	fM D0	2	
.6	0007F1		f + D1		
.7	6807N1	6K0	f x K2		
.8	FN27K0		f(+) MD0	2	
.9	0007F2	6K1	f + T2		Convert angles to radians
.10	6807N2		f x K3		
.11	FN27K0	6K2	f (+)MD0	2	
.12	0007F3		f + T3		
.13	0007F3	6K3	f + T3		
.14	1007K2		fM D2		
.15	0007F4	6K4	f + T4		
.16	1007K3		fM D3		
18.1	0007F4	6K5	f + T4		
.2	4N06K6		fC'18A.1		Next case?
.3	NN0604	6K6	fU 13.1		
18A.1	F0269J		IfC 17.1	2	
19 .1	0007K1	6K7	f + D1		
.2	0407J0		f(-)P1		
.3	1007L0	6K8	fM T16		$\Delta\lambda$
20.1	0007N3		f + K4		
.2	N407N3	6K9	f(+)K4		
.3	1007FK		fM T10		
.4	0007N5	6KK	f + K6		
.5	7807FK		f ÷ T10		
.6	1007FK	6KS	fM T10		Test for
.7	0007K0		f + D0		$\phi \stackrel{?}{=} \frac{\pi}{2}$?
.8	0407FK	6KN	f(-)T10		
.9	4N06KJ		fC'21.1		
.10	NN06S1	6KJ	fU 23.1		
21.1	0007FK		f + T10		
.2	0407K0	6KF	f(-)D0		
.3	4N06KL		fC'22.1		

SEQUENCE	CODE	ADDRESS	ORDER	INDEX	DESCRIPTION
21.4	NN06S1	6KL	fU 23.1		
22.1	0007K0		f + D0		
.2	0407SL	6S0	f(-)K0		
.3	1007K0		fM D0		
23.1	0007K0	6S1	f + D0		
.2	SN01L1		U* sin-cos		
.3	1007J7	6S2	fM P8		sin ϕ
.4	000017		f + 017		
.5	1007J8	6S3	fM P9		cos ϕ
.6	0007J7		f + P8		
.7	7807J8	6S4	f ÷ P9		
.8	1007J9		fM P10		tan ϕ
.9	0007L0	6S5	f + T16		
.10	SN01L1		U* sin-cos		
.11	1007JK	6S6	fM P11		sin $\Delta\lambda$
.12	000017		f + 017		
.13	1007JS	6S7	fM P12		cos $\Delta\lambda$
24.1	0007N9		f + C2		
.2	7807N8	6S8	f ÷ C1		
.3	6807J9		f x P10		
.4	1007FN	6S9	fM T12		$\tan \psi = \tan \phi \cdot \frac{b}{a}$
.5	1007FN		fM T12		
.6	0007FN	6SK	f + T12		
.7	SN03N0		U* arctan		
.8	1007FN	6SS	fM T12		ψ
.9	0007FN		f + T12		
.10	0007FN	6SN	f + T12		
.11	SN01L1		U* sin-cos		
.12	1007JN	6SJ	fM P13		sin ψ
.13	000017		f + 017		
.14	1007JJ	6SF	fM P14		cos ψ
.15	1007JJ		fM P14		
25.1	0007N8	6SL	f + C1		
.2	6807JJ		f x P14		
.3	1007FK	6N0	fM T10		$S_p = a \cos \psi$
.4	0007N9		f + C2		
.5	6807JN	6N1	f x P13		$Z_p = b \sin \psi$
.6	1007FS		fM P11		
.7	0007K2	6N2	f + D2		
.8	6807J8		f x P9		
.9	FN07FK	6N3	f + MT10		$S = S_p + H \cos \phi$
.10	0007K2		f + D2		
.11	6807J7	6N4	f x P8		$Z = Z_p + H \sin \phi$
.12	FN07FS		f + MT11		

SEQUENCE	CODE	ADDRESS	ORDER	INDEX	DESCRIPTION
25.13	0007FK	6N5	f + T10		
.14	6807JS		f x P12		
.15	1007FN	6N6	fM T12		$X = S \cos \Delta\lambda$
.16	0007FK		f + T10		
.17	6807JK	6N7	f x P11		$Y = S \sin \Delta\lambda$
.18	1007FJ		fM T13		
26.1	0007NF	6N8	f + S2		
.2	2N06J1		fC 29.1		Test S2
.3	1N06N9	6N9	fU' 27.1		
27.1	0007FN		f + T12		
.2	1007K5	6NK	fM D5		$X \longrightarrow X_o$
.3	1007F0		fM T0		
.4	0007FJ	6NS	f + T12		
.5	1007K6		fM D6		
.6	1007F1	6NS	fM T1		$Y \longrightarrow Y_o$
.7	0007FS		f + T11		
.8	1007K7	6NJ	fM D7		$Z \longrightarrow Z_o$
.9	1007F2		fM T2		
.10	NN0706	6NF	fU 86.1		
.11	1007NF		fM S2		
28.1	000784	6NL	f + W2		Print x_i, y_i, z_i, id.
.2	SN02FJ		U*IBMR		
.3	NN069N	6J0	fU 16.1		
.4	NN069N		fU 16.1		
29.1	0007FN	6J1	f + T12		$x'_i = X_i - X_o \longrightarrow X$
.2	0407K5		f(-)D5		
.3	1007K8	6J2	fM D8		
.4	0007FJ		f + T13		
.5	0407K6	6J3	f(-)D6		$y'_i = Y_i - Y_o \longrightarrow Y$
.6	1007K9		fM D9		
.7	0007FS	6J4	f + T11		
.8	0407K7		f(-)D7		
.9	1007KK	6J5	fM D10		$z'_i = Z_i - Z_o \longrightarrow Z$
.10	1007KK		fM D10		
30.1	0007J2	6J6	f + P3		$x_i = x'_i(\cos \alpha \cos \beta)$
.2	6807J4		f x P5		
.3	6807K8	6J7	f x D8		$+ y'_i(\sin \beta)$
.4	1007F0		fM T0		$- z'_i(\sin \alpha \cos B)$
.5	0007J3	6J8	f + P4		
.6	6807K9		f x D9		
.7	FN07F0	6J9	f(+) MT0		
.8	2407J1		f - P2		

SEQUENCE	CODE	ADDRESS	ORDER	INDEX	DESCRIPTION
30.9	6807J4	6JK	f x P5		
.10	6807KK		f x D10		
.11	FN07F0	6JS	f(+)MT0		
.12	0007J2		f + P3		
.13	6807J3	6JN	f x P4		
.14	6807J6		f x P7		
.15	1007F1	6JJ	fM T1		
.16	0007J1		f + P2		
.17	6807J5	6JF	f x P6		
.18	0407F1		f(-)T1		
.19	6807K8	6JL	f x D8		
.20	1007F1		fM T1		
.21	0007J4	6F0	f + P5		
.22	6807J6		f x P7		
.23	6807K9	6F1	f x D9		$y_1 = x_1'(\sin\alpha \sin\gamma$
.24	FN07F1		f x MT1		
.25	0007J1	6F2	f + P2		$-\cos\alpha \sin\beta \cos\gamma)$
.26	6807J3		f x P4		
.27	6807J6	6F3	f x P7		$+ y_1'(\cos\beta \cos\gamma)$
.28	1007L0		fM T16		$+ z_1'(\cos\alpha \sin\gamma + \sin\alpha \sin\beta \cos\gamma)$
.29	0007J2	6F4	f + P3		
.30	6807J5		f x P6		
.31	N407L0	6F5	f(+)T16		
.32	6807KK		f x D10		
.33	FN07F1	6F6	f(+)MT1		
.34	0007J2		f + P3		
.35	6807J3	6F7	f x P4		
.36	6807J5		f x P6		
.37	1007L0	6F8	fM T16		
.38	0007J1		f + P2		
.39	6807J6	6F9	f x P7		$z_1 = x_1'(\sin\alpha \cos\gamma$
.40	N407L0		f(+)T16		
.41	6807K8	6FK	f x D8		$+ \cos\alpha \sin\beta \sin\gamma)$
.42	1007F2		fM T2		$- y_1'(\cos\beta \sin\gamma)$
.43	0007J4	6FS	f + P5		$+ z_1'(\cos\alpha \cos\gamma$
.44	6807J5		f x P6		$-\sin\alpha \sin B \sin\gamma)$
.45	1007L0	6FN	fM T16		
.46	2407K9		f - D9		
.47	6807L0	6FJ	f x T16		
.48	FN07F2		f + MT2		
.49	0007J1	6FF	f + P2		
.50	6807J3		f x P4		
.51	6807J5	6FL	f x P6		
.52	1007L0		fM T16		

SEQUENCE	CODE	ADDRESS	ORDER	INDEX	DESCRIPTION
30.53	0007J2	6L0	f + P3		
.54	6807J6		f x P7		
.55	0407L0	6L1	f(-)T16		
.56	6807KK		f x D10		
.57	FN07F2	6L2	f(+)MT2		
.58	NN06NL		fU 28.1		
80.1	0007F4	6L3	f + T4		
.2	1007F5		fM T5		
.3	1007FS	6L4	fM T11		
.4	0007NK		f + C3		
.5	1007F4	6L5	fM T4		
.6	1007FK		fM T10		
.7	3007F9	6L6	OM T9		
.8	443003		ISA	3	Unused
.9	0007N3	6L7	f + K4		
.10	1037F6		fM T6	3	
.11	F036L7	6L8	IfC 80.9	3	
.12	000785		f + W4		
.13	000785	6L9	f + W4		
.14	SN02FJ		U*IBMR		
.15	NN069N	6LK	fU 16.1		
.16	NN069N		fU 16.1		
81.1	N407FK	6LS	f(+)T10		
.2	1007FS		fM T11		ø" - 3600
.3	1N0674	6LN	fU'63.1		
69A.1	0007J2		f + P3		
.2	6807J3	6LJ	f x P4		
.3	6807J5		f x P6		Part of Box 69
.4	1007L1	6LF	fM T17		
.5	0007J1		f + P2		
.6	6807J6	6LL	f x P7		
.7	1N0683		fU' 69.16		
83.1	6407NK	700	f|-| C3		
.2	1007NN		fM S4		Set 4(-)
.3	1N0606	701	fU' 14.6		
.4	1N0606		fU' 14.6		
84.1	0007NN	702	f + S4		
.2	2N0618		fC 39.1		Test S4
.3	1N0703	703	fU' 85.1		
85.1	F407NK		f + C3		
.2	1007NN	704	fM S4		
.3	SN024L		U*24L		Print blank
.4	NN0618	705	fU 39.1		
.5	NN0618		fU 39.1		

SEQUENCE	CODE	ADDRESS	ORDER	INDEX	DESCRIPTION
86.1	F407NK	706	f + C3		
.2	1007NK		fM S2		
.3	000784	707	f + W3		Print X_o, Y_o, Z_o, id.
.4	SN02FJ		U* IBMR		
.5	000784	708	f + W3		
.6	SN024L		U* 24L		Print blank
.7	NN069N	709	fU 16.1		
.8	NN069N		fU 16.1		
87.1	2407NS	70K	f - C4		
.2	4N070J		fC'89.1		$\geqq 0$
88.1	K80780	70S	+ B1	↑	Set field words for 10 digit
.2	6003SF		M3SF		
.3	K80781	70N	+ B2		Floating decimal output (S10-S2)
.4	6003SL		M3SL	↓	
.5	NN0710	70J	fU 90.1		
89.1	K80786		+B4	↑	Set Field words for 8 digit floating decimal output (S8-S2)
.2	6003SF	70F	M 3SF		
.3	K80787		+B5		
.4	6003SL	70L	M 3SL	↓	
.5	NN0710		fU 90.1		
90.1	000783	710	f + W2		
.2	SN02FJ		U*IBMR		Print a,b, ± .1,± .1
.3	NN0700	711	fU 83.1		
.4	NN0700		fU 83.1		

B. OPTION

SEQUENCE	CODE	ADDRESS	ORDER	INDEX	DESCRIPTION
	800300		Key		
	200711		word		
90.3	NN0717	711	fU 91.11		
.4	NN0717		fU 91.11		
91.1	0007F4	712	f + T4		
.2	1007K3		fM D3		Point number
.3	1007F5	713	fM T5		Point number
.4	00078K		f + W7		
.5	1007F3	714	fM T3		Weighting factor
.6	F407NK		f + C3		
.7	1007F4	715	fM T4		Point type
.8	0007K3		f + D3		
.9	4N06K6	716	fC' 18A.1		
.10	NN0604		fU 13.1		
.11	0007NN	717	f + C5		Temporary storage
.12	10078K		fM W7		of weights
.13	NN0700	718	fU 83.1		
.14	NN0700		fU 83.1		
	800003		Key		
	2006K4		word		
17.15	NN0712	6K4	fU 91.1		
.16	NN0712		fU 91.1		
	800003		Key		
	2006NL		word		
28.1	000789	6NL	f + W6		Print for camera
.2	SN02FJ		U*IBMR		orientation input
	800003		Key		
	200783		word		
	050005	783	W2		Control word - Print
	1007N8				a, b, ± .1, ± .1
					weights
	800003		Key		
	200789		word		
	060006	789	W6		Control word to
	1007F0				print for camera
					orientation
	800001				
	000LL1				

SEQUENCE	CODE	ADDRESS	ORDER	INDEX	DESCRIPTION
	K20K2K 2K02K2	780	B1	↑	Field words for format of 10 digit floating
	J20F7N 000000	781	B2	↓	decimal numbers (S10 - S2)
	050009 1007SL	782	W1		Unused
	050004 1007N8	783	W2		Read a, b, ± .1, ± .1
	050005 1007F0	784	W3		Control word for input and output
	050005 1007F0	785	W4		Unused
	820828 280282	786	B3	↑	Field words for format of 8 digit floating
	820F7N 000000	787	B4	↓	binary numbers (S8 - S2)
		788	W5		Available
		789	W6		Available
		78K	W7		Temporary storage for weighting factor

VI. CONSTANTS

The following floating decimal constants with 22 decimal digits were converted to sexadecimal form for input with the program in order to maintain maximum accuracy, especially in converting degrees, minutes, and seconds to radians:

+ .1000	0000	0000	0000	0000	00	- 16 constant
+ .1745	3292	5199	4329	5769	00	- 01 radians = 1°
+ .2908	8820	8665	7215	9615	00	- 03 radians = $1'$
+ .4848	1368	1109	5359	9359	00	- 05 radians = $1''$
+ .1000	0000	0000	0000	0000	00	+ 01 constant
+ .5000	0000	0000	0000	0000	00	- 06 iterative constant
+ .3141	5926	5358	9793	2384	60	+ 01 π
+ .6000	0000	0000	0000	0000	00	+ 02 constant
+ .2000	0000	0000	0000	0000	00	+ 01 constant

VII. DATA

A. FORMAT

The data cards are punched using standard floating decimal form (S8-S2) - [coefficient (sign and 8 digits) with exponent (sign and 2 digits)] or (S10-S2) - [coefficient (sign and 10 digits) with exponent (sign and 2 digits)] . The sign is in a separate column using "0" punch or no punch for plus and "X" for minus.

B. INPUT AND OUTPUT

The data input has 10 (S10-S2) decimal digits while the output may either be with 8 (S8-S2) or 10 (S10-S2) decimal digits. The input cards contain five 10-digit floating decimal numbers. Card No. 1 contains information designating form of output and signal for direct or inverse transformation.

The option card placed before "transfer to program" card is used to print six (S8-S2) numbers which include information such as weight, point type, and point number, in addition to the local Cartesian coordinates. This form of output is prepared for use with the photogrammetric camera orientation program.

Card No. 1:

a b ± . 1 ± . 1 weight

only used in option

← + = output S10 - S2

← - = output S8 - S2

← + From geodetic ellipsoidal coordinates to local Cartesian coordinates

← - From local Cartesian coordinates to geodetic ellipsoidal coordinates

See sample input for remainder of cards.

If a minus angle is used minus must be punched with all three values, i.e. degrees, minutes, and seconds.

Follow each case by a card with -.1 punches in columns 57 and 58. As many cases as desired may be run by stacking one after the other.

For output see samples.

A. Roberta Wooten

A. ROBERTA WOOTEN

VIII. SAMPLES

DIRECT TRANSFORMATION

A.1. **INPUT (S10-S2):**

a	.6378206400	07	b	.6356583800	07	.1000000000	0	-.1			wt.	.1000000000	20
α	.3000000000	02°		.00	00'	.00	00"	.				.	
β	.6000000000	02°		.00	00'	.00	00"	.				.	
γ	.1100000000	02°		.00	00'	.00	00"	.				.	
(λ)	.3000000000	02°		.00	00'	.00	00"	.				.	
ϕ_o	.3300000000	02°		.1500000000	02'	.00	00"	H_o	.00		00	id.	.888
λ_o	.1120000000	03°		.2000000000	01'	.3000000000	02"	H_o	.00		00	id.	.888
ϕ_1	.3300000000	02°		.2900000000	02'	.4090500000	02"	H_1	.3457050000		03	pt#	.1000000000 01
λ_1	.1120000000	03°		.2000000000	01'	.5300600000	02"	H_1	.3457050000		03	pt#	.1000000000 01
	.3300000000	02°		.2900000000	02'	.4231700000	02"		.3601830000		03		.2000000000 01
	.1120000000	03°		.0000000000	00'	.4722400000	02"		.3601830000		03		.2000000000 01
	.3300000000	02°		.2900000000	02'	.4044500000	02"		.3682910000		03		.3000000000 01
	.1110000000	03°		.5900000000	02'	.4135600000	02"		.3682910000		03		.3000000000 01
	.3300000000	02°		.2900000000	02'	.3708100000	02"		.3781970000		03		.4000000000 01
	.1110000000	03°		.5800000000	02'	.3929200000	02"		.3781970000		03		.4000000000 01
	.3300000000	02°		.2800000000	02'	.4854400000	02		.3352810000		03		.5000000000 01
	.1120000000	03°		.3000000000	01'	.5177300000	02"		.3352810000		03		.5000000000 01
	.			.		.			.				-.1

2. **OUTPUT (S8 -S2):**

a	.63782064	07	b	.63565838	07		.10000000	00		.10000000	00		.	
X_o	.73926119	06	Y_o	.52880168	07	Z_o	.34769959	07	H_o	.00000000	00	id.	.88800000	00
	.			.			.			.			.	
x_i	-.19331433	05	y_i	.80909770	04	z_i	.17258366	05	H_1	.34570500	03	pt #	.10000000	01
	-.18350873	05		.58307076	04		.19373897	05		.36018300	03		.20000000	01
	-.17780251	05		.46251237	04		.20430183	05		.36829100	03		.30000000	01
	-.17206358	05		.34769590	04		.21394716	05		.37819700	03		.40000000	01
	-.18653961	05		.87096000	04		.15242694	05		.33528100	03		.50000000	01
	.			.			.			.			.	

DIRECT TRANSFORMATION

3. **INPUT (S10-S2):**

a	.6378206400	07	b .6356583800	07	.1000000000	00	.1				.	
α	.3000000000	02°	.00	00'	.00	00"	.				.	
β	.6000000000	02°	.00	00'	.00	00"	.				.	
γ	.1100000000	02°	.00	00'	.00	00"	.				.	
(λ)	.3000000000	02°	.00	00'	.00	00"	.				.	
ϕ_o	.3300000000	02°	.1500000000	02'	.00	00"	H_o	.00	0	id.	.888	
λ_o	.1120000000	03°	.2000000000	01'	.3000000000	02"	H_o	.00	00	id.	.888	
ϕ_i	.3300000000	02°	.2900000000	02'	.4090500000	02"	H_i	.3457050000	03	pt#	.1000000000	01
λ_i	.1120000000	03°	.2000000000	01'	.5300600000	02"	H_i	.3457050000	03	pt#	.1000000000	01
↓	.3300000000	02°	.2900000000	02'	.4231700000	02"	↓	.3601830000	03	↓	.2000000000	01
	.1120000000	03°	.0000000000	00'	.4722400000	02"		.3601830000	03		.2000000000	01
	.3300000000	02°	.2900000000	02'	.4044500000	02"		.3682910000	03		.3000000000	01
	.1110000000	03°	.5900000000	02'	.4135600000	02"		.3682910000	03		.3000000000	01
	.3300000000	02°	.2900000000	02'	.3708100000	02"		.3781970000	03		.4000000000	01
	.1110000000	03°	.5800000000	02'	.3929200000	02"		.3781970000	03		.4000000000	01
	.3300000000	02°	.2800000000	02'	.4854400000	02"		.3352810000	03		.5000000000	01
	.1120000000	03°	.3000000000	01'	.5177300000	02"		.3352810000	03		.5000000000	01
	.		.		.			.			-.1	

4. **OUTPUT (S10-S2):**

a	.6378206400	07	b .6356583800	07	.1000000000	00	.1000000000	00	.			
X_o	.7392611900	06	Y_o .5288016840	07	Z_o .3476995877	07	H_o .0000000000	0	id.	.8880000000	00	
	.		.		.		.			.		
x_i	-.1933143294	05	y_i .8090977021	04	z_i .1725836610	05	H_i .3457050000	03	pt#	.1000000000	01	
	-.1835087267	05	.5830707593	04	.1937389728	05	.3601830000	03		.2000000000	01	
	-.1778025115	05	.4625123712	04	.2043018349	05	.3682910000	03		.3000000000	01	
	-.1720635834	05	.3476958963	04	.2139471566	05	.3781970000	03		.4000000000	01	
	-.1865396068	05	.8709600040	04	.1524269400	05	.3352810000	03		.5000000000	01	

INVERSE TRANSFORMATION

B. 1. INPUT (S10-S2):

a	.6378206400	07	b	.6356583800	07		-.1000000000	0		-.1000000000	00		.	
α	.3000000000	02°		.00	00		.00	00"		.			.	
β	.6000000000	02°		.00	00'		.00	00"		.			.	
γ	.1100000000	02°		.00	00'		.00	00"		.			.	
(λ)	.3000000000	02°		.00	00'		.00	00"		.			.	
X_o	.7392611900	06	X_o	.5288016840	07	Z_o	.3476995877	07		.00		00	id. .9999	
x_i	-.1933143282	05	y_o	.8090977022	04	z_o	.1725836606	05		.00			pt # .1000000000	01
↓	-.1835087258	05	y_i	.5830707560	04	z_i	.1937389724	05		.			.2000000000	01
	-.1778025108	05	↓	.4625123691	04	↓	.2043018345	05		.0			.3000000000	01
	-.1720635832	05		.3476958981	04		.2139471564	05		.0			.4000000000	01
	-.1865396065	05		.8709600028	04		.1524269402	05		.0			.5000000000	01
	.0			.			.			.			↓ .6000000000	01
													-1.	

2. OUTPUT (S8-S2):

a	.63782064	07	b	.63565838	07		-.10000000	00		.10000000	00		.		.
ϕ_o	.33000000	02°		.14000000	02'		.59999993	02"	H_o	.24955677	-04	id.	.99990000	00	.
λ_o	.11200000	03°		.20000000	01'		.29999999	02"	H_o	.24955677	-04	id.	.99990000	00	.
	.			.			.			.			.		.
ϕ_i	.33000000	02°		.29000000	02'		.40904989	02"	H_i	.34570503	03	pt#	.10000000	01	.
λ_i	.11200000	03°		.20000000	01'		.53005999	02"		.34570503	03		.10000000	01	.
	.33000000	02°		.29000000	02'		.42316990	02"		.36018299	03		.20000000	01	.
	.11200000	03°		.00000000	00'		.47223998	02"		.36018299	03		.20000000	01	.
	.33000000	02°		.29000000	02'		.40444990	02"		.36829099	03		.30000000	01	.
	.11100000	03°		.59000000	02'		.41355999	02"		.36829099	03		.30000000	01	.
	.33000000	02°		.29000000	02'		.37080992	02"		.37819699	03		.40000000	01	.
	.11100000	03°		.58000000	02'		.39292000	02"		.37819699	03		.40000000	01	.
	.33000000	02°		.28000000	02'		.48543993	02"		.33528099	03		.50000000	01	.
	.11200000	03°		.30000000	01'		.51772998	02"		.33528099	03		.50000000	01	.
	.33000000	02°		.14000000	02'		.59999993	02"		.24955677	-04		.60000000	01	.
	.11200000	03°		.20000000	01'		.29999999	02"		.24955677	-04		.60000000	01	.
	.			.			.			.			.		.

INVERSE TRANSFORMATION

3. INPUT (S10-S2):

a	.6378206400	07	b	.6356583800	07	-.1000000000	00	.1000000000	00				
α	.3000000000	02°		.00	00'	.00	00"	.					
B	.6000000000	02°		.00	00'	.00	00"	.					
γ	.1100000000	02°		.00	00'	.00	00"	.					
(λ)	.3000000000	02°		.00	00'	.00	00"	.					
X_o	.7392611900	06	Y_o	.5288016840	07	Z_o .3476995877	07	.00		id.	.9999		
x_i	-.1933143282	05	y_i	.8090977022	04	z_i .1725836606	05	.00		pt #	.1000000000	01	
	-.1835087258	05		.5830707560	04	.1937389724	05	.			.2000000000	01	
	-.1778025108	05		.4625123691	04	.2043018345	05	.0			.3000000000	01	
	-.1720635832	05		.3476958981	04	.2139471564	05	.0			.4000000000	01	
	-.1865396065	05		.8709600028	04	.1524269402	05	.0			.5000000000	01	
	.0			.		.		.			.6000000000	01	
	.			.		.		.			-.1		

4. OUTPUT (S10-S2):

a	.6378206400	07	b	.6356583800	07	-.1000000000	00	.1000000000	00				
ϕ_o	.3300000000	02°		.1400000000	02'	.5999999283	02"	H_o -.2495567664	-04	id.	.9999000000	00	
λ_o	.1120000000	03°		.2000000000	01'	.2999999903	02"	H_o -.2495567664	-04	id.	.9999000000	00	
	.			.		.		.			.		
ϕ_i	.3300000000	02°		.2900000000	02'	.4090498921	02"	H_i .3457050293	03	pt#	.1000000000	01	
λ_i	.1120000000	03°		.2000000000	01'	.5300599874	02"	H_i .3457050293	03		.1000000000	01	
	.3300000000	02°		.2900000000	02'	.4231698973	02"	.3601829899	03		.2000000000	01	
	.1120000000	03°		.0000000000	00'	.4722399807	02"	.3601829899	03		.2000000000	01	
	.3300000000	02°		.2900000000	02'	.4044499016	02"	.3682909896	03		.3000000000	01	
	.1110000000	03°		.5900000000	02'	.4135599857	02"	.3682909896	03		.3000000000	01	
	.3300000000	02°		.2900000000	02'	.3708099213	02"	.3781969866	03		.4000000000	01	
	.1110000000	03°		.5800000000	02'	.3929199992	02"	.3781969866	03		.4000000000	01	
	.3300000000	02°		.2800000000	02'	.4854399250	02"	.3352809909	03		.5000000000	01	
	.1120000000	03°		.3000000000	01'	.5177299793	02"	.3352809909	03		.5000000000	01	
	.3300000000	02°		.1400000000	02'	.5999999283	02"	-.2495567664	-04		.6000000000	01	
	.1120000000	03°		.2000000000	01'	.2999999903	02"	-.2495567664	-04		.6000000000	01	

DIRECT TRANSFORMATION

(Option For the Photogrammetric Camera Orientation Program Input)

C.1. INPUT (S10-S2):

a	.6378206400	07	b.6356583800	07	.1000000000	00	-.1			wt.	.1000000000	20	
α	.3000000000	02°	.00	00'	.00	00"	.				.		
β	.6000000000	02°	.00	00'	.00	00"	.				.		
γ	.1100000000	02°	.00	00'	.00	00"	.				.		
(λ)	.3000000000	02°	.00	00'	.00	00"	.				.		
ϕ_o	.3300000000	02°	.1500000000	02'	.00	00"	H_o .00		00		.888		
λ_o	.1120000000	03°	.2000000000	01'	.3000000000	02"	H_o .00		00		.888		
ϕ_1	.3300000000	02°	.2900000000	02'	.4090500000	02"	H_1 .3457050000		03	Pt#	.1000000000	01	
λ_1	.1120000000	03°	.2000000000	01'	.5300600000	02"	H_1 .3457050000		03	Pt#	.1000000000	01	
	.3300000000	02°	.2900000000	02'	.4231700000	02"	.3601830000		03		.2000000000	01	
	.1120000000	03°	.0000000000	00'	.4722400000	02"	.3601830000		03		.2000000000	01	
	.3300000000	02°	.2900000000	02'	.4044500000	02"	.3682910000		03		.3000000000	01	
	.1110000000	03°	.5900000000	02'	.4135600000	02"	.3682910000		03		.3000000000	01	
	.3300000000	02°	.2900000000	02'	.3708100000	02"	.3781970000		03		.4000000000	01	
	.1110000000	03°	.5800000000	02'	.3929200000	02"	.3781970000		03		.4000000000	01	
	.3300000000	02°	.2800000000	02'	.4854400000	02"	.3352810000		03		.5000000000	01	
	.1120000000	03°	.3000000000	01'	.5177300000	02"	.3352810000		03		.5000000000	01	
	.		.		.		.				-.1		

2. OUTPUT (S8-S2):

a	.63782064	07	b	.63565838	07		.10000000	00		.10000000	00	wt.	.10000000	20		.
X_o	.73926119	06	Y_o	.52880168	07	Z_o	.34769959	07	wt.	.10000000	20	pt type	.10000000	00		.
	.			.			.			.			.			.
x_i	-.19331433	05	y_i	.80909770	04	z_i	.17258366	05	wt.	.10000000	20	pt type	.10000000	00	pt #	.10000000 01
	-.18350873	05		.58307076	04		.19373897	05		.10000000	20		.10000000	00		.20000000 01
	-.17780251	05		.46251237	04		.20430183	05		.10000000	20		.10000000	00		.30000000 01
	-.17206358	05		.34769590	04		.21394716	05		.10000000	20		.10000000	00		.40000000 01
	-.18653961	05		.87096000	04		.15242694	05		.10000000	20		.10000000	00		.50000000 01

DIRECT TRANSFORMATION

D.1. INPUT (S10-S2) for $(\lambda) = \lambda_o$, $\alpha = 90 = \phi_o$ and $\gamma = 0$:

a	.6378206400	07	b	.6356583800	07		.1000000000	00		.1000000000	00		.
α	.5700000000	02°		.3500000000	02'		.5843200000	02"		.			.
β	.2000000000	02°		.1500000000	02'		.3000000000	02"		.			.
γ	.00	00°		.00	00'		.00	00"		.			.
(λ)	.1060000000	03°		.2200000000	02'		.3879000000	02"		.			.
ϕ_o	.3200000000	02°		.2400000000	02'		.1568000000	01"	H_o	.0000000000	00	id.	.11110
λ_o	.1060000000	03°		.2200000000	02'		.3879000000	02"	H_o	.0000000000	00	id.	.11110
ϕ_1	.3200000000	02°		.2500000000	02'		.1076600000	02"	H_1	.1123480000	04	pt	.1000000000 01
λ_1	.1060000000	03°		.2300000000	02'		.8003000000	01"	H_1	.1123480000	04	pt	.1000000000 01
	.			.			.			.			-.1

2. OUTPUT (S10 - S2):

a	.6378206400	07	b	.6356583800	07		.1000000000	00		.1000000000	00		.
X_o	.5390512301	07	Y_o	.0000000000	00	Z_o	.3397825164	07		.0000000000	00	id	.1111000000 00
	.			.			.			.			.
x_1	-.1735690094	04	y_1	.1454378543	04	z_1	.1123076752	04		.0000000000	00	pt	.1000000000 01

INVERSE TRANSFORMATION

E.1. INPUT (S10 - S2):

a	.6378206400	07	b	.6356583800	07		-.1000000000	00		.1000000000	00		.
α	.5700000000	02°		.3500000000	02'		.5843200000	02"		.			.
β	.2000000000	02°		.1500000000	02'		.3000000000	02"		.			.
γ	.00	00°		.00	00'		.00	00"		.			.
(λ)	.1060000000	03°		.2200000000	02'		.3879000000	02"		.			.
X_o	.5390512301	07	Y_o	.0000000000	00	Z_o	.3397825164	07	H_o	.0000000000	00	id	.1111000000 00
x_i	-.1735690094	04	y_i	.1454378543	04	z_i	.1123076752	04	H_i	.1123480000	04	Pt	.1000000000 01
	.			.			.			.			-.1

2. OUTPUT (S10 - S2):

a	.6378206400	07	b	.6356583800	07		-.1000000000	00		.1000000000	00		.
ϕ_o	.3200000000	02°		.2400000000	02'		.1568001691	01"	H_o	-.4321784430	-03	id	.1111000000 00
λ_o	.1060000000	03°		.2200000000	02'		.3879000000	02"	H_o	-.4321784430	-03	id	.1111000000 00
	.			.			.			.			.
ϕ_i	.3200000000	02°		.2500000000	02'		.1076600171	02"	H_i	.1123479568	04	pt	.1000000000 01
λ_i	.1060000000	03°		.2300000000	02'		.8002999990	01"	H_i	.1123479568	04	pt	.1000000000 01

DISTRIBUTION LIST

No. of Copies	Organization
1	Chief of Ordnance ATTN: ORDTB-Bal Sec Department of the Army Washington 25, D. C.
2	Commanding Officer Diamond Ordnance Fuze Laboratories ATTN: Technical Information Office, Branch 012 Mr. Francis E. Washer Washington 25, D. C.
10	Commander Armed Services Technical Information Agency ATTN: TIPCR Arlington Hall Station Arlington 12, Virginia
1	Office of Technical Services Department of Commerce Washington 25, D. C.
10	Commander British Army Staff British Defence Staff (W) ATTN: Reports Officer 3100 Massachusetts Avenue, N.W. Washington 8, D. C. Of Interest to: Prof. E. H. Thompson University College London, W. C. 1 England
5	Defence Research Member Canadian Joint Staff 2450 Massachusetts Avenue, N.W. Washington 8, D. C. Of Interest to: National Research Council of Canada ATTN: Mr. T. J. Blachut Mr. G. H. Schut Ottawa 2, Ontario
3	Chief, Bureau of Naval Weapons ATTN: DIS-33 Department of the Navy Washington 25, D. C.
2	Commander Naval Ordnance Laboratory White Oak, Silver Spring 19, Maryland
1	Commander U.S. Naval Ordnance Test Station China Lake, California
1	Commander U.S. Naval Weapons Laboratory ATTN: Dr. W. A. Kemper Dahlgren, Virginia
1	Commanding Officer U.S. Naval Photographic Interpretation Center 4301 Suitland Road Suitland, Maryland
1	Hydrographer U.S. Naval Hydrographic Office Washington 25, D. C.
3	Commander U.S. Naval Missile Center ATTN: Mr. John A. Clement Point Mugu, California
1	Superintendent U.S. Naval Observatory ATTN: Dr. William Markowitz 34th and Massachusetts Avenue, N.W. Washington 25, D. C.
1	Director Air University Library ATTN: AUL (3T-AUL-60-118) Maxwell Air Force Base, Alabama

DISTRIBUTION LIST

No. of Copies	Organization
3	Commander Air Proving Ground Center ATTN: PGTRI PGEES-Mr. W. A. Brown (2 cys) Eglin Air Force Base, Florida
2	Commander Air Force Missile Test Center (AFMT Tech Lib. MU-135) Patrick Air Force Base, Florida
2	Commander Air Force Cambridge Research Center, ARDC ATTN: Geophysics Research Directorate L. G. Hanscom Field Bedford, Massachusetts
1	Commander Rome Air Development Center ATTN: Library Griffiss Air Force Base Rome, New York
1	Commander Wright Air Development Division ATTN: Aeronautical Research Laboratory Wright-Patterson Air Force Base, Ohio
1	Commander Holloman Air Development Center, SEB, FDL Holloman Air Force Base, New Mexico
1	Commanding Officer Air Force Aeronautical Chart Service ATTN: Division of Photogrammetry Washington, D. C.
1	Commander Aeronautical Chart and Information Center Air, Photographic and Charting Service (MATS) ATTN: Chief Photogrammetry Research Branch Mr. Edwin Roth Second & Arsenal Streets St. Louis 18, Missouri
3	Commanding General Army Rocket and Guided Missile Agency ATTN: Dr. Ernst Stuhlinger Dr. Hellmut Holzer Dr. Bruns Redstone Arsenal, Alabama
3	Commanding General White Sands Missile Range ATTN: ORDBS-TS-TIB Mr. Ted Durrenberger New Mexico
1	Commanding General U.S. Army Signal Engineeering Laboratories ATTN: Tech Document Center Fort Monmouth, New Jersey
4	Commanding General Engineering Research & Development Laboratories ATTN: Mr. William C. Cude Mr. D. Esten Mr. John T. Pennington Mr. Matos Fort Belvoir, Virginia
1	Commanding Officer U.S. Army Research Office (Durham) ATTN: Dr. Theodore W. Schmidt Box CM, Duke Station Durham, North Carolina

DISTRIBUTION LIST

No. of Copies	Organization
4	Commanding Officer Army Map Service ATTN: Photogrammetric Division Col. F. O. Diercks Mr. A. Nowicki Mr. J. Theis Mr. Soren W. Henricksen 6500 Brooks Lane, N.W. Washington 16, D. C.
3	Director U.S. Geological Survey ATTN: Chief, Topographic Eng. Mr. Russel K. Bean Mr. R. E. Altenhofen Washington 25, D. C.
4	Director U.S. Coast & Geodetic Survey ATTN: Commander L. W. Swanson Mr. G. C. Tewinkel Mr. Charles Whitten Mr. L. G. Simmons Department of Commerce Washington 25, D. C.
1	National Academy of Science ATTN: Dr. Pembroke J. Hart, Jr. 2101 Constitution Avenue, N.W. Washington 25, D. C.
1	Director National Bureau of Standards ATTN: Dr. Irvine C. Gardner 232 Dynamometer Building Washington 25, D. C.
1	Director National Science Foundation ATTN: Technical Library Washington, D. C.
4	Director National Aeronautics & Space Administration ATTN: Dr. John O'Keefe Mr. B. Milwitzky Mr. W. M. Kaula Mr. L. N. Comer 1520 H. Street, N.W. Washington 25, D. C.
1	NASA Goddard Space Flight Center Satellite Application Division ATTN: Dr. Nordberg 4555 Overlook Avenue, S. W. Washington 25, D. C.
1	Director National Aeronautics & Space Administration Langley Research Center ATTN: Mr. Richard M. Dickerson Langley Field, Virginia
1	Smithsonian Institute Astrophysical Observatory ATTN: Dr. Fred Whipple 60 Garden Street Cambridge 38, Massachusetts
1	Director Boston University Physical Research Laboratory Boston, Massachusetts
1	Cornell University School of Civil Engineering ATTN: Prof. Arthur J. McNair Center of Aerial Photographic Studies Ithaca, New York

DISTRIBUTION LIST

No. of Copies	Organization
1	Cincinnati Observatory ATTN: Dr. Paul Herget Cincinnati, Ohio
2	Ohio State University Mapping and Charting Research Laboratory ATTN: Prof. A.J.Brandenberger Prof. A. R. Robbins Columbus, Ohio
1	Princeton University Department of Civil Engineering ATTN: Prof. Sumner B. Irish Princeton, New Jersey
2	Syracuse University L. C. Smith College of Engineering Department of Civil Engineering ATTN: Prof. Arthur Faulds Prof. Paul G. Brennan Syracuse 10, New York
1	Syracuse University Department of Civil Engineering ATTN: Photogrammetric Department Syracuse, New York
1	Massachusetts Institute of Technology Dept. of Civil & Sanitary Engineering ATTN: C. L. Miller, Director Photogrammetry Lab. Cambridge 39, Massachusetts
1	New Mexico School of Agriculture & Mechanic Arts ATTN: Dr. George Gardiner State College, New Mexico
2	University of Illinois Department of Civil Engineering ATTN: Dr. H. M. Karara Prof. Milton O. Schmid Urbana, Illinois
1	University of Pennsylvania Computing Laboratory ATTN: Mr. John B. Crozier Philadelphia 4, Pennsylvania
1	University of Michigan ATTN: Prof. Edward Young Ann Arbor, Michigan
1	Lamount Geological Laboratory (Columbia University) ATTN: Dr. W. M. Ewing Palisades, New York
3	Autometric Corporation ATTN: Dr. Ulrich Heidelauf Mr. E. L. Merritt Mr. Charles Spooner New York, New York
1	Bausch & Lomb Optical Company ATTN: Mr. Heinz Gruner 262 St. Paul Street Rochester, New York
1	Bendix Aviation Corporation Computer Division ATTN: V. A. van Praag 5630 Arbor Vitae Street Los Angeles 45, California
1	International Business Machine Corporation ATTN: Mr. John V. Sharp Endicott, New York

DISTRIBUTION LIST

No. of Copies	Organization
1	Kern Instruments, Inc. ATTN: Hans J. Wehrli 120 Grand Street White Plains, New York
1	O.M.I. Corporation of America ATTN: Mr. S. J. Friedman 512 N. Pitt Street Alexandria, Virginia
1	Photogrammetry, Inc. ATTN: Mr. Gomer T. McNeil 922 Burlington Drive Silver Spring, Maryland
1	Radio Corporation of America RCA Service Company ATTN: RCA Data Reduction Group Analysis Unit Mr. Duane Brown Patrick Air Force Base, Florida
1	Ramo-Wooldridge Corporation ATTN: Dr. E. Stern 5730 Arbor Vitae Street P. O. Box 45067 Airport Station Los Angeles 45, California
2	Smithsonian Institute ATTN: Dr. Karl G. Henize Dr. J. Allen Hynek Washington 25, D. C.
1	Technical Operations, Inc. ATTN: Mr. Samuel S. Holland Burlington, Massachusetts
1	Telecomputing Corporation Engineering Services Division Burbank, California
1	Volunteer Satellite Tracking Program ATTN: Mr. Norton Goodwin 826 Connecticut Avenue Washington 6, D. C.
3	Wild Heerbrugg Instruments, Inc. ATTN: Mr. K. E. Reynolds Main & Covert Streets Port Washington, New York
1	Philco Corporation Western Development Laboratories ATTN: Mr. Eric Besag 3875 Fabian Way Palo Alto, California
5	Mr. Marshall S. Wright 929 Highgate Road Alexandria, Virginia
1	Mr. Robert Zurlinden 2118 - 37th Street, N.W. Washington 7, D. C.

AD_____ Accession No._____ UNCLASSIFIED

Ballistic Research Laboratories, APG
AN ORDVAC PROGRAM FOR THE TRANSFORMATION OF GEODETIC ELLIPSOIDAL COORDINATES INTO CARTESIAN COORDINATES AND VICE VERSA
A. Roberta Wooten

BRLM Report No. 1322 February 1961

DA Proj No. 503-06-011, OMSC No. 5210.11.143
UNCLASSIFIED Report

The transformation of geodetic ellipsoidal coordinates into Cartesian coordinates and vice versa is programmed for the ORDVAC using a pseudo code - "The One Address Floating Binary Double Precision Code (OFBDP)."

Geodetic data - Mathematical analysis
Mathematical computers - Coding
Photogrammetry - Mathematical analysis

AD_____ Accession No._____ UNCLASSIFIED

Ballistic Research Laboratories, APG
AN ORDVAC PROGRAM FOR THE TRANSFORMATION OF GEODETIC ELLIPSOIDAL COORDINATES INTO CARTESIAN COORDINATES AND VICE VERSA
A. Roberta Wooten

BRLM Report No. 1322 February 1961

DA Proj No. 503-06-011, OMSC No. 5210.11.143
UNCLASSIFIED Report

The transformation of geodetic ellipsoidal coordinates into Cartesian coordinates and vice versa is programmed for the ORDVAC using a pseudo code - "The One Address Floating Binary Double Precision Code (OFBDP)."

Geodetic data - Mathematical analysis
Mathematical computers - Coding
Photogrammetry - Mathematical analysis

AD_____ Accession No._____ UNCLASSIFIED

Ballistic Research Laboratories, APG
AN ORDVAC PROGRAM FOR THE TRANSFORMATION OF GEODETIC ELLIPSOIDAL COORDINATES INTO CARTESIAN COORDINATES AND VICE VERSA
A. Roberta Wooten

BRLM Report No. 1322 February 1961

DA Proj No. 503-06-011, OMSC No. 5210.11.143
UNCLASSIFIED Report

The transformation of geodetic ellipsoidal coordinates into Cartesian coordinates and vice versa is programmed for the ORDVAC using a pseudo code - "The One Address Floating Binary Double Precision Code (OFBDP)."

Geodetic data - Mathematical analysis
Mathematical computers Coding
Photogrammetry - Mathematical analysis

AD_____ Accession No._____ UNCLASSIFIED

Ballistic Research Laboratories, APG
AN ORDVAC PROGRAM FOR THE TRANSFORMATION OF GEODETIC ELLIPSOIDAL COORDINATES INTO CARTESIAN COORDINATES AND VICE VERSA
A. Roberta Wooten

BRLM Report No. 1322 February 1961

DA Proj No. 503-06-011, OMSC No. 5210.11.143
UNCLASSIFIED Report

The transformation of geodetic ellipsoidal coordinates into Cartesian coordinates and vice versa is programmed for the ORDVAC using a pseudo code - "The One Address Floating Binary Double Precision Code (OFBDP)."

Geodetic data - Mathematical analysis
Mathematical computers Coding
Photogrammetry - Mathematical analysis

AD _____ Accession No. _____ UNCLASSIFIED

Ballistic Research Laboratories, APG
AN ORDVAC PROGRAM FOR THE TRANSFORMATION OF GEODETIC ELLIPSOIDAL COORDINATES INTO CARTESIAN COORDINATES AND VICE VERSA
A. Roberta Wooten

Geodetic data - Mathematical analysis
Mathematical computers - Coding
Photogrammetry - Mathematical analysis

BRLM Report No. 1322 February 1961

DA Proj No. 503-06-011, OMSC No. 5210.11.143
UNCLASSIFIED Report

The transformation of geodetic ellipsoidal coordinates into Cartesian coordinates and vice versa is programmed for the ORDVAC using a pseudo code - "The One Address Floating Binary Double Precision Code (OFBDP)."

AD _____ Accession No. _____ UNCLASSIFIED

Ballistic Research Laboratories, APG
AN ORDVAC PROGRAM FOR THE TRANSFORMATION OF GEODETIC ELLIPSOIDAL COORDINATES INTO CARTESIAN COORDINATES AND VICE VERSA
A. Roberta Wooten

Geodetic data - Mathematical analysis
Mathematical computers - Coding
Photogrammetry - Mathematical analysis

BRLM Report No. 1322 February 1961

DA Proj No. 503-06-011, OMSC No. 5210.11.143
UNCLASSIFIED Report

The transformation of geodetic ellipsoidal coordinates into Cartesian coordinates and vice versa is programmed for the ORDVAC using a pseudo code - "The One Address Floating Binary Double Precision Code (OFBDP)."

AD _____ Accession No. _____ UNCLASSIFIED

Ballistic Research Laboratories, APG
AN ORDVAC PROGRAM FOR THE TRANSFORMATION OF GEODETIC ELLIPSOIDAL COORDINATES INTO CARTESIAN COORDINATES AND VICE VERSA
A. Roberta Wooten

Geodetic data - Mathematical analysis
Mathematical computers Coding
Photogrammetry - Mathematical analysis

BRLM Report No. 1322 February 1961

DA Proj No. 503-06-011, OMSC No. 5210.11.143
UNCLASSIFIED Report

The transformation of geodetic ellipsoidal coordinates into Cartesian coordinates and vice versa is programmed for the ORDVAC using a pseudo code - "The One Address Floating Binary Double Precision Code (OFBDP)."

AD _____ Accession No. _____ UNCLASSIFIED

Ballistic Research Laboratories, APG
AN ORDVAC PROGRAM FOR THE TRANSFORMATION OF GEODETIC ELLIPSOIDAL COORDINATES INTO CARTESIAN COORDINATES AND VICE VERSA
A. Roberta Wooten

Geodetic data - Mathematical analysis
Mathematical computers Coding
Photogrammetry - Mathematical analysis

BRLM Report No. 1322 February 1961

DA Proj No. 503-06-011, OMSC No. 5210.11.143
UNCLASSIFIED Report

The transformation of geodetic ellipsoidal coordinates into Cartesian coordinates and vice versa is programmed for the ORDVAC using a pseudo code - "The One Address Floating Binary Double Precision Code (OFBDP)."