UNCLASSIFIED

AD NUMBER
AD252067
LIMITATION CHANGES
TO: **Approved for public release; distribution is unlimited.**
FROM: **Distribution authorized to U.S. Gov't. agencies and their contractors; Administrative/Operational Use; 31 OCT 1960. Other requests shall be referred to Naval Ordnance Laboratory, White OAk, MD 20993.**
AUTHORITY
USNOL ltr, 29 Aug 1974

THIS PAGE IS UNCLASSIFIED

UNCLASSIFIED

AD 252 067

Reproduced
by the

ARMED SERVICES TECHNICAL INFORMATION AGENCY
ARLINGTON HALL STATION
ARLINGTON 12, VIRGINIA

UNCLASSIFIED

NOTICE: When government or other drawings, specifications or other data are used for any purpose other than in connection with a definitely related government procurement operation, the U. S. Government thereby incurs no responsibility, nor any obligation whatsoever; and the fact that the Government may have formulated, furnished, or in any way supplied the said drawings, specifications, or other data is not to be regarded by implication or otherwise as in any manner licensing the holder or any other person or corporation, or conveying any rights or permission to manufacture, use or sell any patented invention that may in any way be related thereto.

CATALOGED BY ASTIA
AS AD No. 252 067

NAVWEPS REPORT 6026

151 300

THE DYNAMIC COMPRESSIBILITY OF SOLIDS FROM SINGLE EXPERIMENTS USING LIGHT REFLECTION TECHNIQUES

31 October 1960

RELEASED TO ASTIA
BY THE NAVAL ORDNANCE LABORATORY
☑ Without restrictions
☐ For Release to Military and Government Agencies Only.
☐ Approval by BuWeps required for release to contractors.
☐ Approval by BuWeps required for all subsequent release.

U. S. NAVAL ORDNANCE LABORATORY
WHITE OAK, MARYLAND

625 200

ASTIA
RECEIVED
MAR 10 1961
TIPDR

61-2-3
NOX

THE DYNAMIC COMPRESSIBILITY OF SOLIDS FROM SINGLE EXPERIMENTS USING LIGHT-REFLECTION TECHNIQUE

By:

N. L. Coleburn

Approved by: A. D. Solem
A. D. SOLEM
Chief, Explosion Dynamics Division

ABSTRACT: An experimental technique has been developed to determine in a single experiment the dynamic compressibility of a solid over a relatively large pressure range. The method consists of observing with a rotating-mirror smear camera, the behavior of the free surface of a wedge of the test material shortly after the opposite wedge surface has been struck by a plane, explosive-driven shock wave. Reflected light, shock luminescence, and the spallation of plastic films from shocked wedge surfaces are employed. Using one-dimensional geometry, shock and free-surface velocities are measured as a function of a wedge thickness. The data are treated with the pertinent hydrodynamic equations to obtain the compressibility curve. The results of measurements on the compression of aluminum and Plexiglas in the pressure region of 70 to 300 kilobars are presented.

PUBLISHED JANUARY 1961

EXPLOSIONS RESEARCH DEPARTMENT
U. S. NAVAL ORDNANCE LABORATORY
White Oak, Silver Spring, Maryland

An increasing need exists for basic knowledge of the behavior of materials subjected to pressures from 50,000 to 400,000 atmospheres imposed by shock waves from the detonation of explosives. This report describes some experimental techniques useful in the observation and measurement of phenomena occurring in this pressure region. The dynamic compressibility data of Plexiglas and aluminum are presented. This work was carried out under Task FR-52, Dynamic Properties of Solids. It is directly related to Explosives Research and Development Key Problem 7.7.10, "Study the Behavior of Metals Under Very High Loadings", as given in NAVORD Report 3906. The data herein reported are for information only for use by workers in the field of dynamic high pressures.

W. D. COLEMAN
Captain, USN
Commander

C. J. Aronson

C. J. ARONSON
By direction

CONTENTS

	Page
Introduction	1
The Experimental Work	3
Approach	3
Experimental Techniques	4
Experimental Assemblies	6
Typical Experimental Records	11
Analysis of the Data	17
The Experimental Results	23
Conclusions	30
Acknowledgment	31
References	31

ILLUSTRATIONS

Figure 1A.	Explosive System and Wedge Arrangement, for Measuring Shock and Free-Surface Velocities	7
Figure 1B.	Flasher Plate Details for Shock Luminescence Method	7
Figure 1C.	Reflected Light-Impedance Mismatch Method	8
Figure 1D.	Reflected Light, Two-Slit Method	8
Figure 2.	Experimental Arrangement for the Measurement of the Shock Velocity and Free-Surface Velocity of a Thick Metal Plate	10
Figure 3.	Observation of Free-Surface Velocities by Air Shock Luminescence	12
Figure 4.	The Spallation of a Plastic Film from a Shocked Metal Surface	13
Figure 5.	Observation of Shock Wave and Free-Surface Arrival by Reflected Light-Two-Slit System	15
Figure 6.	The Detection of Shock Wave Arrival in a Plexiglas Wedge by Reflected Light from an Aluminized Film on the Wedge Free Surface	16
Figure 7.	Record of Experimental Arrangement Shown in Fig. 2. Transit Times of the Free Surface and Plastic Film are Observed as a Function of Air Gap Thickness	18
Figure 8A.	Detonation Wave and Shock Wave Arrival Times	19
Figure 8B.	Shock Velocity in Aluminum as a Function of Distance from Axis of Symmetry of Detonator	19
Figure 9.	Variation in Free-Surface Velocities Measured by Air Shock Luminescence	21
Figure 10.	Free-Surface Velocities of Aluminum and Mylar Film as a Function of Air Gap Thickness	22
Figure 11.	Variation of Particle Velocity with Shock Velocity of Aluminum	24
Figure 12.	The Dynamic Compressibility of Aluminum	25

ILLUSTRATIONS (Cont'd.)

Page

Figure 13. Particle Velocity as a Function of Shock Velocity in Plexiglas. 26
Figure 14. The Dynamic Compressibility of Plexiglas 27

Table I. Shock Wave Compression Data for Aluminum. 28
Table II. Shock Wave Compression Data for Plexiglas 29

THE DYNAMIC COMPRESSIBILITY OF SOLIDS FROM SINGLE EXPERIMENTS USING LIGHT-REFLECTION TECHNIQUE

INTRODUCTION

When a plane shock wave, traveling through material in a direction normal to the surface of the material, arrives at the free surface it is reflected as a rarefaction and produces motion of the surface. The free surface acquires a velocity, u_f, which is initially almost exactly twice the particle velocity, u, of the shocked material:

$$u_f \doteq 2u .$$

The pressure and specific volume of the shocked specimen are related to the particle velocity and shock velocity by the one-dimensional hydrodynamic conservation equations:

$$P = \frac{1}{V_o} u U$$

and

$$\frac{V}{V_o} = \frac{U - u}{U}$$

where

P = pressure in the shocked state;

U = shock velocity;

V_o = initial specific volume;

V = specific volume of the shocked material.

Compressibility data obtained by measuring the shock velocity and free-surface velocity of a test specimen can be considered in this manner as a series of readings on a pressure gage in which the test specimen itself is the manometer. The range of measurement can be extended by varying either the strength of the shock-wave generator or the thickness of the shocked solid, or by varying both elements. This approach was first used by Goranson[1] to obtain Rankine-Hugoniot compressibility data for aluminum and steel. It has two basic requirements:

The shock wave must be plane (thus permitting use of the above one-dimensional equation).

The measuring system must have a time resolution short compared with the duration of the observed shock phenomena. Shock-wave and free-surface transit times often occur in 10^{-6} seconds or less.

The first requirement is met by the development of lens-type explosive systems[2] capable of converting point initiation of the explosive to a plane detonation wave. The second requirement is met by high-resolution systems employing electronic-pin technique or high-speed photography.

In the past, experiments to measure dynamic compressibilities of solids have been generally made using material of constant thickness. Thus a number of experiments were required to obtain sufficient data to construct the Rankine-Hugoniot curve of any one material. The shock-wave transit through the solid and the free-surface motion were signaled electronically by pin probes or photographically by shock light from suddenly compressed small air gaps. The electronic technique has been a complex, expensive experiment; the photographic technique has been limited by signal resolution.

This report describes innovations that can both extend and improve measurements made by the photographic techniques. These innovations are:

The test specimen is formed into a wedge shape that permits observation of shock and free-surface velocities of the specimen as continuous, varying functions of material thickness.

A reflected-light technique with the smear camera to signal precisely the shock arrival at the material's free surface and the free-surface's arrival at a transparent witness plate set a predetermined distance from the free-surface's original position. Thus the technique yields accurate shock and free surface velocities.

The reflected-light technique was introduced by Cotter[3] and by Allen and McCary[4]. Over the past several years it has been improved by Liddiard and used by Jacobs and Majowicz[5] to study detonation and shock phenomena.

By the uses of wedges and reflected light it is possible to obtain in one experiment accurate compressibility data for a given material over a wide pressure range.

The method has been applied to obtain the compressibility of 61S aluminum and Plexiglas over the pressure range of 70 to 300 kilobars. Aluminum was chosen for this study because the experimental results could be compared with published data. Plexiglas was studied because of the relative lack of published data on the dynamic compressibility of non-metallic solids.

THE EXPERIMENTAL WORK

Approach

Shock Velocity. In the experiments the specimen is formed into wedge shape with a small angle. The specimen is shocked

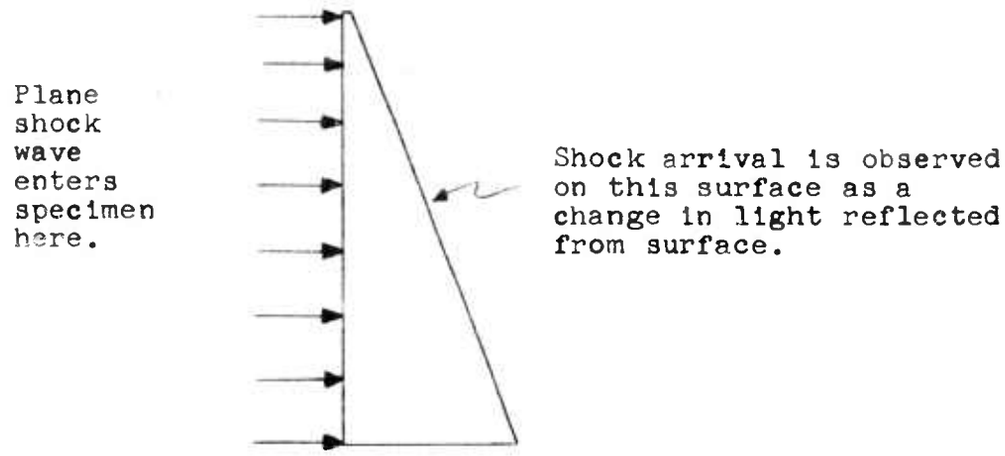

Wedge Specimen

with a plane shock wave as shown in the accompanying sketch and the arrival of the shock at the free surface of the wedge as a function of position along the wedge is observed with a slit in a smear camera. Thus it is possible to determine the shock velocity at the surface of the specimen as a function of location along the wedge slant height.

In principle the wave is plane and the wave front is parallel to the entrance surface of the test specimen. In practice this is not true and to obtain the shock velocity one must know the shape of the shock wave in the specimen. Therefore shock arrival at the wedge free surface is observed through one slit in the camera, and shock arrival at the explosive-specimen interface (in the case of Plexiglas) or at a free surface in a non-wedge region of the specimen (in the case of a metal) is observed through a second slit to correct for non-planarity of the shock wave in the wedge.

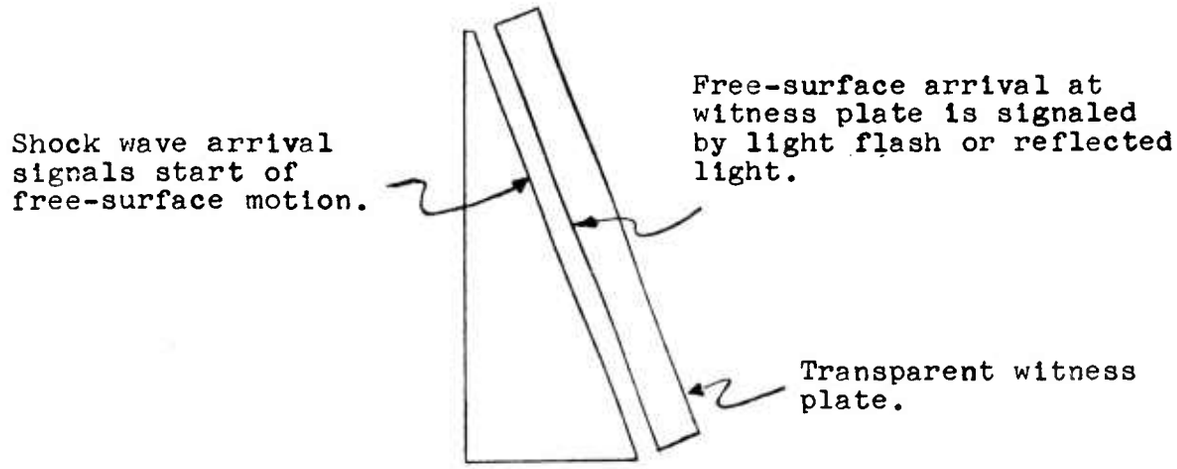

Wedge Specimen

Free-Surface Velocity. In the same experiment the transit time of the free surface across a predetermined air gap is observed as a continuous function of position along the wedge slant height. From these observations the free-surface velocity is determined. Thus for the entire slant height of the wedge the shock velocity (from shock arrival measurements) and the free-surface velocity (from both shock arrival and free-surface arrival measurements) is obtained in one experiment.

Experimental Techniques

The shock arrival at the specimen free surface was always observed using reflected light. By this technique light is reflected continuously from the surface into the camera where it is smeared on the film. Shock arrival at any point along the surface produces a sudden change in the intensity of light reflected from that point into the camera. Thus the film records a continuous trace of the shock arrival at all points located along the free surface covered by the camera slit. This intensity change on shock wave arrival also signals the start of free-surface motion.

Three technqiues were used to observe the arrival of the wedge free surface at the witness plate:

Air-shock luminescence method. In this method the free surface which has been shock accelerated moves through an air gap toward the witness plate. The air is shocked to luminescence as the free surface approaches the witness plate and this luminescence is recorded by the smear camera. (The light is quenched as the witness plate becomes opaque on impact of the free surface.) One slit in the camera records both shock arrival at the free surface and free-surface arrival at the witness plate.

Impedance-mismatch method. In this method a thin film of material with low shock-impedance is placed on the metal free surface. The passage of the shock wave through the free surface and into the film then accelerates the film to somewhat higher velocities than the free surface. The arrival of the film at the witness plate is signaled by air-shock flash luminescence; the arrival of the free surface at the witness plate is signaled by the intensity change of light reflected into the camera as the free surface impacts the witness plate. One slit and one light source are used in this method.

Reflected-light method. One section of the inner surface of the witness plate is made reflecting (the remainder of the witness plate is transparent), and an exploding wire produces light which is reflected from this section into the smear camera. The camera through one slit records, by change in light intensity on impact, the free-surface arrival at the reflective surface of the witness plate. Light from a second exploding wire entering a second slit in the camera simultaneously records the shock arrival at the free surface and the start of free-surface motion.

A number of tests were also run with thick flat aluminum plates to calibrate the experiments and to extend the compressibility data to regions of lower pressures. These plates were arranged with:

A Plexiglas insert extending to the plate-explosive interface so that the shock wave entering the plate can be observed through one slit.

A Mylar foil on the free surface and a witness plate with variable thickness air gap to observe through a second slit:

The shock arrival at the surface of the foil and also at the plate's free surface by reflected light.

The arrival of the foil by air-shock luminescence and the free surface by reflected light at the witness plate.

From these observations it was possible to determine the shock and free-surface velocities of the flat plate, but more important the velocity, or apparent velocity, of the foil and free surface for a given plate thickness as a function of the gap thickness traversed. This information was needed in computing the free-surface velocities of the wedge specimens.

Experimental Assemblies

The experimental assemblies used in the tests are shown in Figure 1. The general assembly, Figure 1A, consisted of an explosive system which when detonated produced a plane shock wave, and the test specimen, either 61S aluminum or Plexiglas, with the machined wedge test section:

The explosive charge was made of a 108-mm diameter plane-wave generator[6] and a 108-mm diameter by 76.2-mm thick cylindrical main explosive charge. The amplitude of the shock transmitted into the test specimen was varied by using explosives of differing detonation pressure: TNT, Composition B, and H-6.

The aluminum test specimens were made into 152-mm diameter discs from 61S aluminum plate. Discs of 6.4- and 12.7-mm thickness were used. For the 6.4-mm thick discs the wedge angle was 5 degrees and its thickness varied from 0.8 mm to 6.4 mm (Point C to Point D, Figure 1A). For the 12.7-mm thick discs the wedge angle was 9 degrees and its thickness varied from 2.5 mm to 12.7 mm (Point C to Point D, Figure 1A).

The Plexiglas specimens were machined in wedge form (there was no material in disc or plate form surrounding these wedges). These wedges were 75-mm long and 40-mm wide. Two sets of wedges were used: one set machined at an angle of 14 degrees varied in thickness from 4 to 19 mm; the other set cut at an angle of 22 degrees varied in thickness from 10 to 50 mm.

The light sources used in the experiments were exploding-tungsten wires[7] of 0.025-mm diameter threaded into glass capillary tubes 76.2-mm long with an inside diameter of 1.0 mm. The wires, pulsed by a 4-microfarad capacitor charged to 5000 volts, were exploded approximately 20 microsec after initiation of the plane-wave generators. In the experimental arrangement the light sources and test specimens were aligned such that the light sources were reflected directly into the camera slits from the surfaces to be observed.

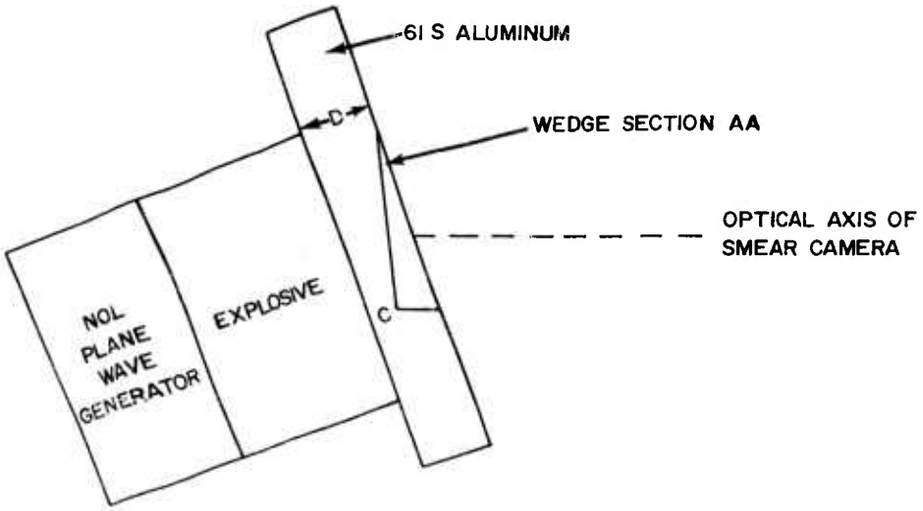

FIG. 1A EXPLOSIVE SYSTEM AND WEDGE ARRANGEMENT, FOR MEASURING SHOCK AND FREE-SURFACE VELOCITIES
SIDE VIEW

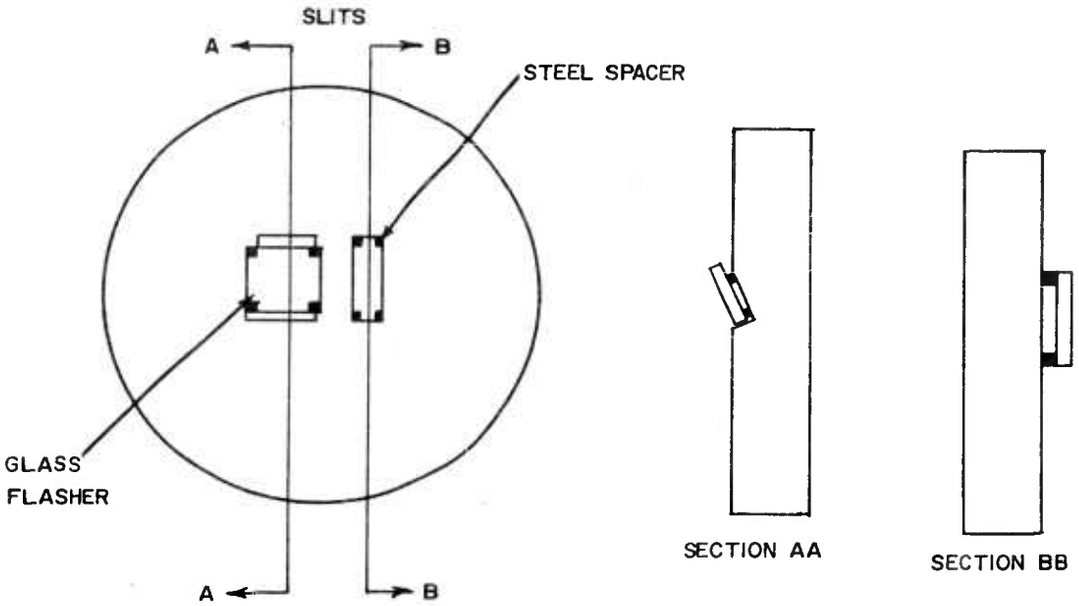

FIG. 1B FLASHER PLATE DETAILS
FOR SHOCK LUMINESCENCE METHOD

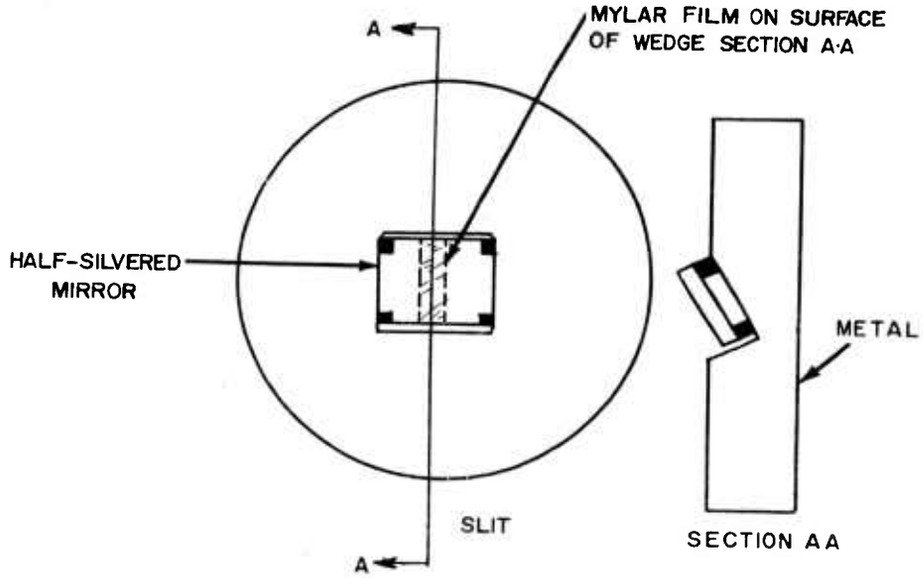

FIG. IC REFLECTED LIGHT - IMPEDANCE MISMATCH METHOD

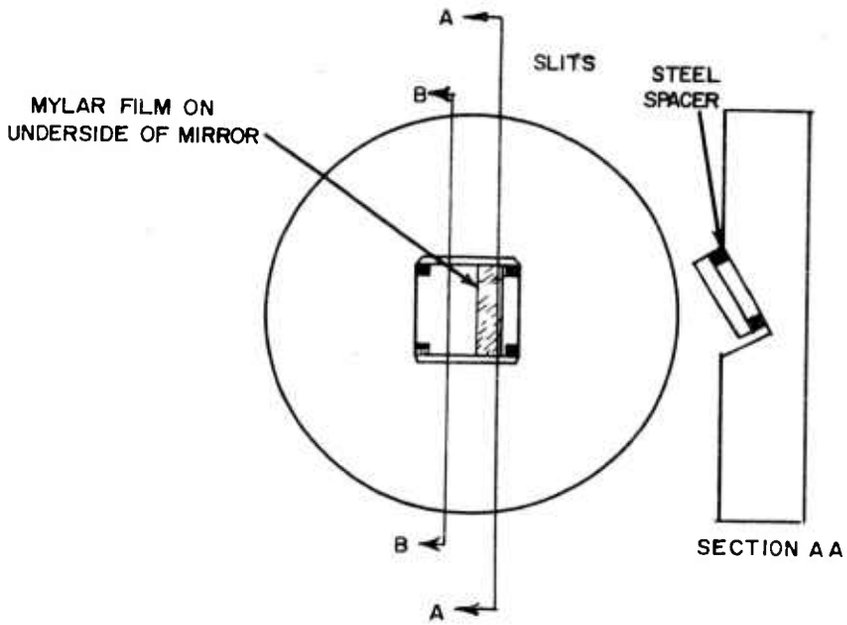

FIG. ID REFLECTED LIGHT, TWO-SLIT METHOD

Figures 1B, 1C, and 1D, show the different slit arrangements used in the experiments.

Air-shock luminescence method, Figure 1B. The arrangement shown here uses two slits. Slit A gives a measure of the shock arrival at the wedge surface and the transit time of the free surface across the air gap. Slit B gives a measure of the profile of the shock wave at a flat region of the specimen disc. If the shock wave profile is known, or only free-surface velocity observations are being made, Slit B may be eliminated.

Impedance-mismatch method, Figure 1C. The arrangement shown here uses one slit and is used only to measure free-surface velocities. (A second slit recording the shock wave profile at a flat portion of the specimen disc is required if accurate shock velocities are also to be obtained.) The spall surface consists of aluminized Mylar film 0.0015-mm thick attached to the surface by a water-detergent solution. A half-silvered mirror (silvered side facing the free surface) is used for the witness plate in an effort to sharpen the intensity change when the free surface impacts the witness plate.

The reflected-light method, Figure 1D. The arrangement used here has two slits. Through Slit B the camera records the arrival of the shock and start of free surface motion on the wedge surface while through Slit A it records, by means of a reflecting surface (aluminized Mylar film) on the inner face of the witness plate, the arrival of the free surface at the witness plate. With this arrangement only free-surface velocities are measured; an additional slit recording the shock wave arrival at a reference plane would be required to obtain accurate shock velocities. The observation of the shock wave profile is made at a reference-plane free surface of the aluminum disc specimens. For Plexiglas specimens the reference plane is the interface between the explosive and the specimen.

The air gap separations used in these arrangements were of constant thickness for each experiment but were varied from 0.09 to 1.5 mm from one experiment to the next. The gaps were selected to allow for longest travel of wedge free surface without shock wave reverberations in the wedge specimen before impact on the witness plate.

The arrangement used in the calibrating experiments is shown in Figure 2. The general assembly consisted of an explosive system as described above which when detonated produced a plane shock wave, and the test specimen. Each test specimen was a 61S aluminum disc, 178 mm in diameter and 25-mm thick.

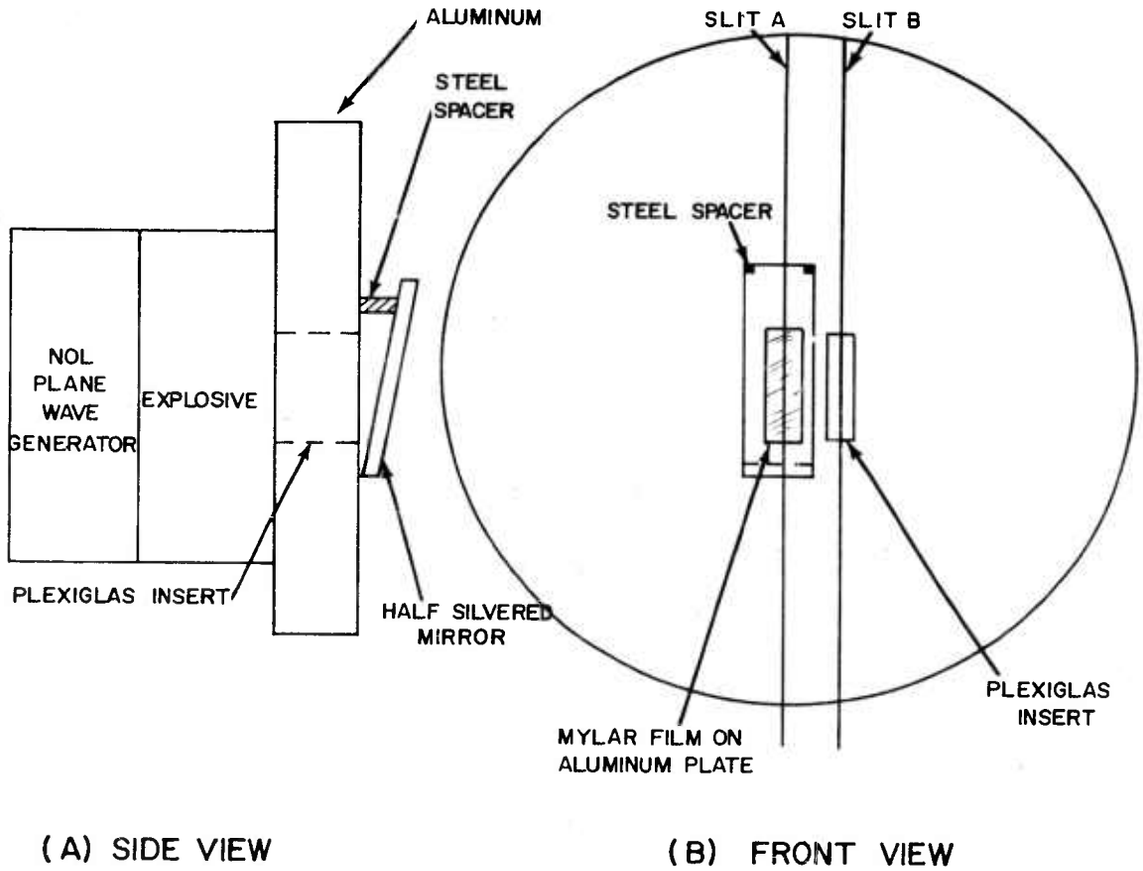

FIG. 2 EXPERIMENTAL ARRANGEMENT FOR THE MEASUREMENT OF THE SHOCK VELOCITY AND FREE-SURFACE VELOCITY OF A THICK METAL PLATE

The Plexiglas insert was 51-mm long and 6-mm wide made flush with the two surfaces of the disc. The witness plate was inclined to the disc free surface at an angle of 4 degrees; the air gap ranged from 0 to 4.8 mm. The Mylar foil was attached to the surface of the aluminum plate by a water-detergent solution.

Typical Experimental Records

Typical records obtained in the experiments with the different arrangements discussed above are shown in Figures 3 to 8. The figures principally illustrate observation of the start of the free-surface motion and the arrival of the free surface at the witness plate from which free-surface velocities are calculated, although in some cases methods for observing the shape of the shock wave in the specimen are also shown.

Figure 3 shows a dynamic record in which the arrival of the shock wave at an aluminum wedge free surface (and start of free-surface motion) was observed by the reflected-light technique and the arrival of the free surface at the witness plate was observed by air-shock luminescence. Two slits as shown in Figure 1B were used in the experiment:

One slit (Slit A, Figure 1B) recorded (Trace A, Figure 3) by the reflected light technique the shock arrival at the free surface of the wedge and the start of wedge free-surface motion.

The same slit recorded (Trace B, Figure 3) the arrival of the free surface at the witness plate.

A second slit (Slit B, Figure 1B) recorded (Trace C, Figure 3) the profile of the shock wave arriving at the specimen disc surface.

From these records it is possible to determine both the shock and free-surface velocities.

Figure 4 shows a typical dynamic record in which the shock wave arriving at the wedge free surface of an aluminum specimen was recorded by the reflected-light technique and the free surface transit across an air gap was recorded by a spall surface traversing the gap. One slit as shown in Figure 1C was used in the experiment and the witness plate was a half-silvered mirror:

Trace A recorded the arrival of the shock wave at the wedge free surface and the start of spall material motion.

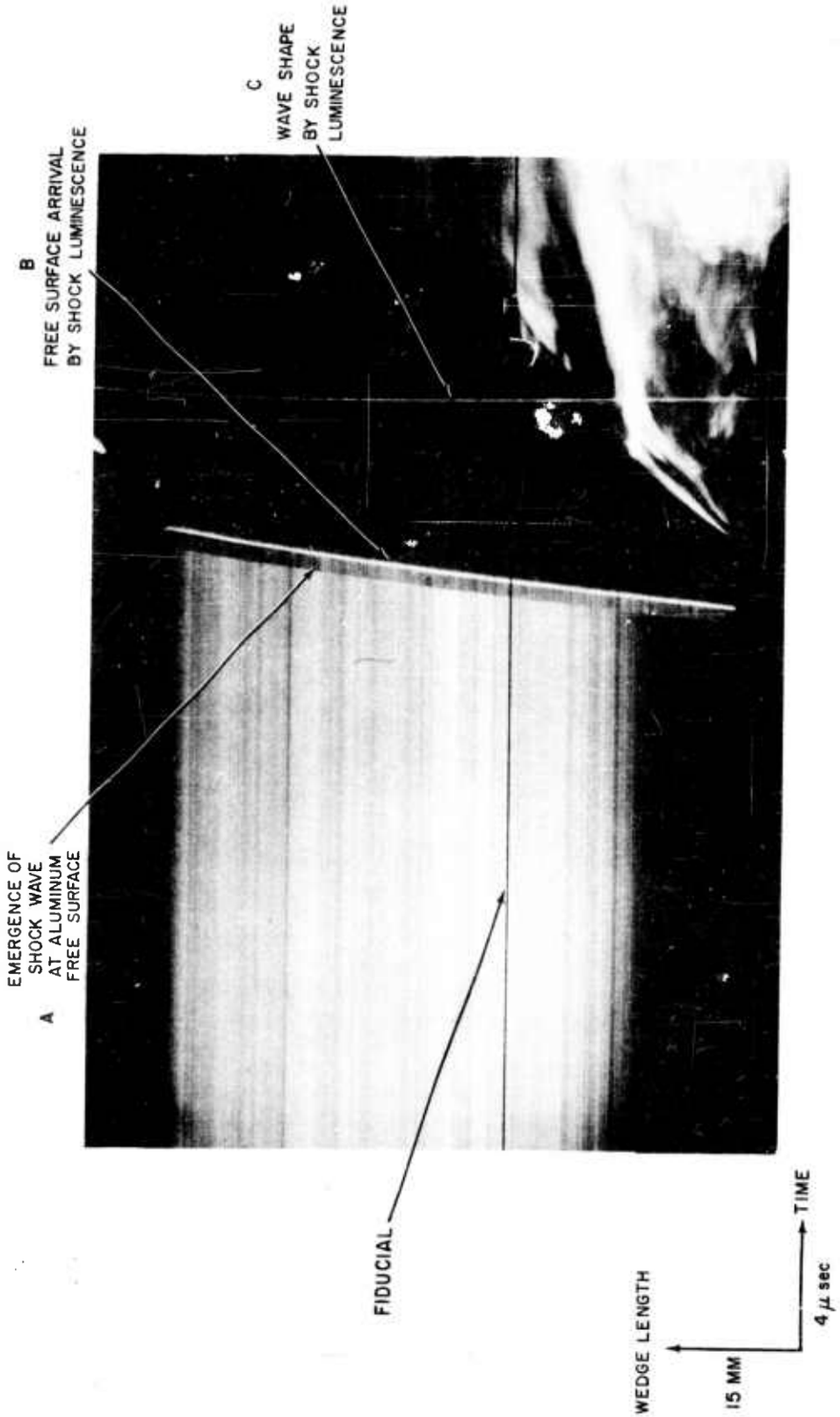

FIG. 3 OBSERVATION OF FREE-SURFACE VELOCITIES BY AIR SHOCK LUMINESCENCE

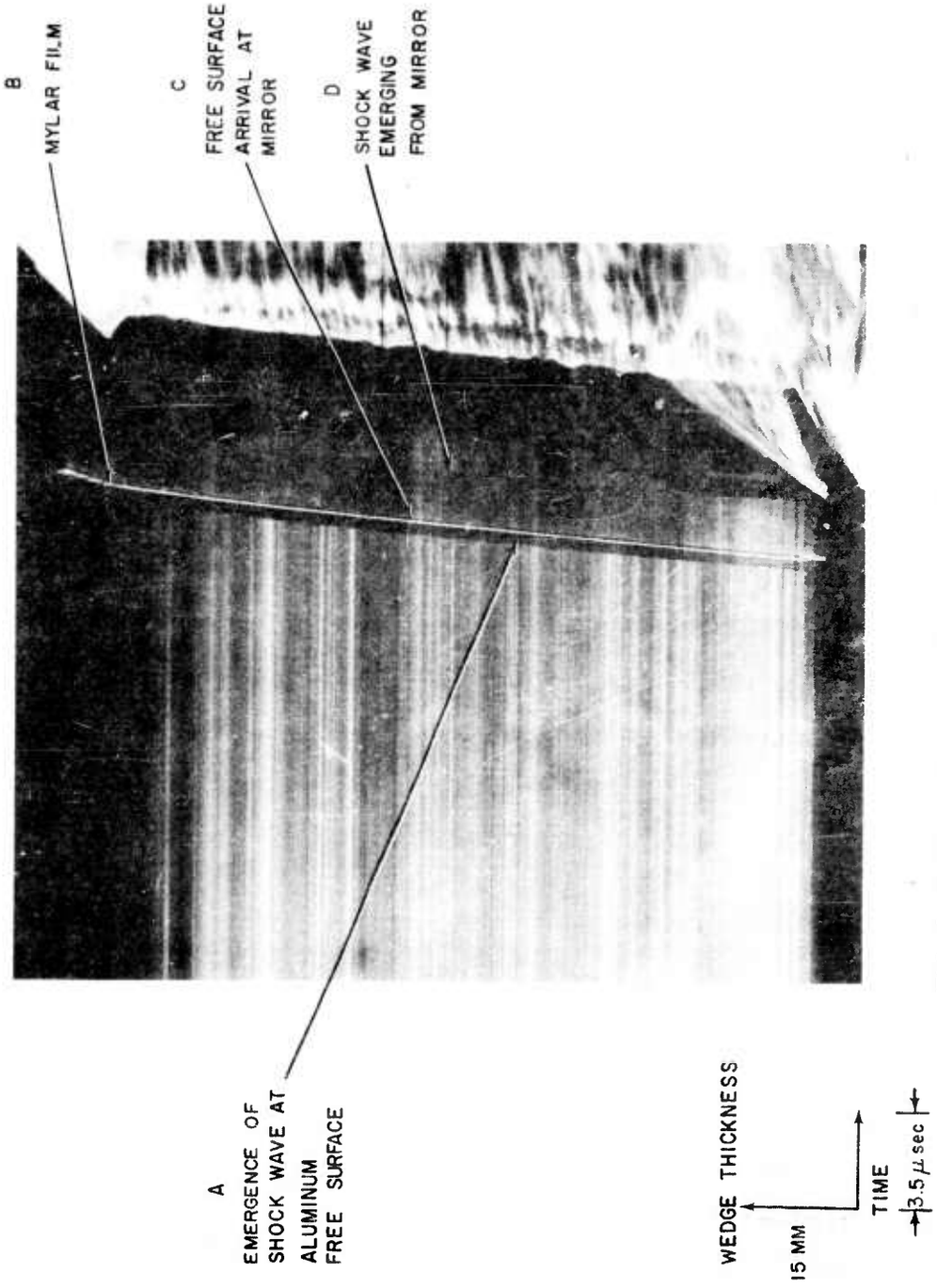

FIG. 4 THE SPALLATION OF A PLASTIC FILM FROM A SHOCKED METAL SURFACE

Trace B recorded the arrival of the spall material at the witness plate by air shocked to luminescence.

Trace C recorded the arrival of the wedge free surface at the witness plate signaled by a change in light reflected from the half-silvered mirror surface of the witness plate.

From these traces the spall-surface velocity and wedge free-surface velocity can be determined.

Figure 5 shows a dynamic record in which the arrival of the shock wave at an aluminum wedge surface (and the start of free-surface motion) and the arrival of the free surface at the witness plate were observed by the reflected-light technique. Two slits as shown in Figure 1D were used:

One slit recorded (Trace A, Figure 5) the shock wave arrival at the wedge free surface. This slit also, incidentally, recorded the arrival of the free surface at the witness plate by the air-shock luminescence (Trace B, Figure 5).

A second slit recorded (Trace C, Figure 5) the arrival of the free surface at the witness plate.

To interpret the record and compute free-surface velocities a still picture of the arrangement prior to firing is needed to determine the spacing between slits. Shock velocity measurements cannot be obtained from this record alone. However, if the system has been calibrated so that the shock wave profile is known then shock velocities can also be computed using Trace A.

Figure 6 shows a typical record in which the shock and free-surface velocities of a Plexiglas wedge were obtained. Two slits were used:

One slit recorded (Trace A, Figure 6) by reflected light the shock arrival at the wedge free surface. This surface has been made reflecting by a Mylar strip.

The same slit recorded (Trace B, Figure 6) by air-shock luminescence the arrival of the free surface at the witness plate.

A second slit recorded (Trace C, Figure 6) the profile of the shock wave entering the Plexiglas at the explosive-Plexiglas interface.

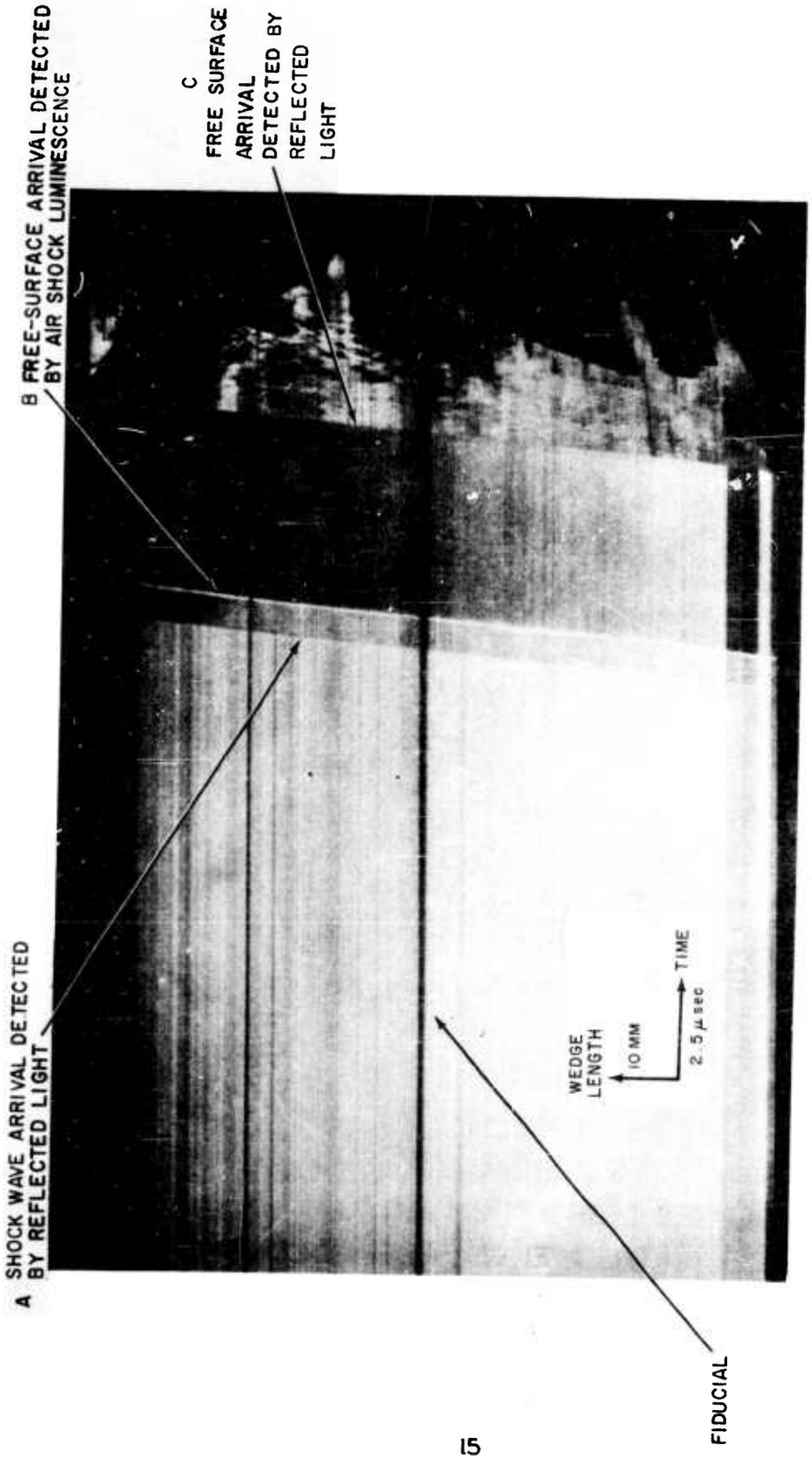

FIG. 5 OBSERVATION OF SHOCK WAVE AND FREE-SURFACE ARRIVAL BY REFLECTED LIGHT-TWO-SLIT SYSTEM

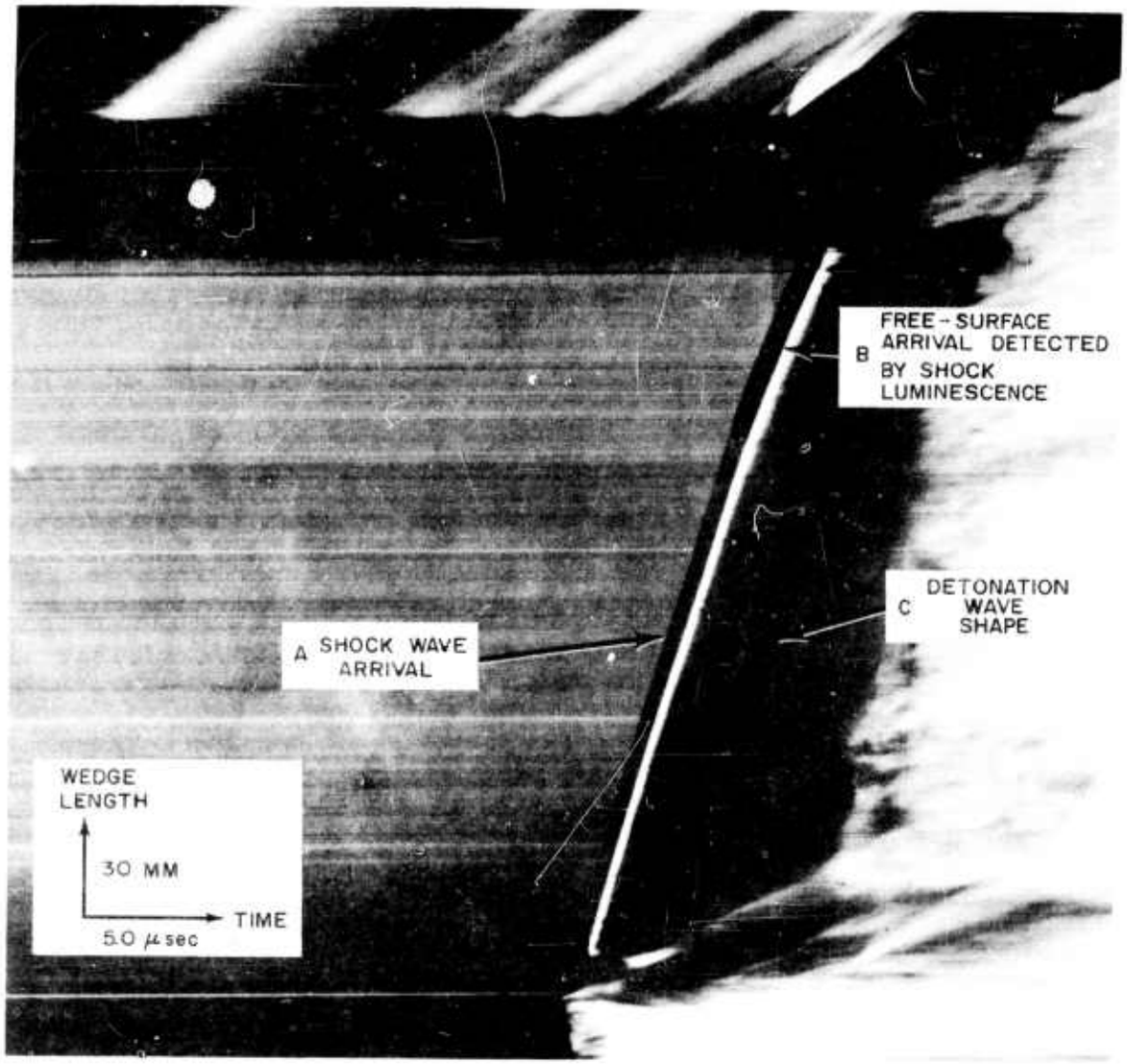

FIG. 6 THE DETECTION OF SHOCK WAVE ARRIVAL IN A PLEXIGLAS WEDGE BY REFLECTED LIGHT FROM AN ALUMINIZED FILM ON THE WEDGE FREE SURFACE

From these records both the shock and free-surface velocities of the Plexiglas can be determined.

Figure 7 shows a typical record for a calibrating experiment using the arrangement sketched in Figure 2:

Traces A and B are still pictures of the slits A and B superimposed on the dynamic record trace.

The camera through Slit A recorded, as shown in Trace C, the shape of the shock wave (detonation wave profile) entering the test specimen.

Slit B was used to record (Trace D) the shock wave arrival at the specimen free surface by reflected light and the start of free surface and "spalled" Mylar film motion.

Slit B also recorded (Trace E) by air-shock luminescence the arrival of the spalled Mylar at the witness plate, separated originally from the free surface by a variable air gap.

Slit B further recorded (Trace F) the arrival of the specimen plate free surface at the witness plate. The witness plate in this case was a half-silvered mirror and the record was made by the reflected-light technique.

Analysis of the Data.

Shock Velocities. In computing shock velocities for wedge specimens, shock emergence times along the wedge slant height were converted to shock transit times through the specimen material and then correlated to wedge thickness in the direction of shock travel. A shock wave profile, either entering the specimen or leaving the flat portion of the specimen disc, was used to correct the observed transit time-wedge thickness data. After correction the transit time-wedge thickness data were fitted with a second-degree equation by least squares technique and the derivative of this equation yielded the shock velocity.

As indicated above one must know the profile of the shock wave in the specimen if the shock velocities are to be obtained with accuracy. Figure 8A shows typical detonation and shock arrival times at the explosive-specimen interface and at the specimen free surface for a calibrating experiment with a flat plate. Note that the shock wave front is curved and that it is not symmetrically aligned with the axis of the system. The deviations are not large; for the shock velocities (Figure 8B) determined from these two profiles across the specimen

Wave tilt $\sim$ 25 minutes

$\Delta U \sim 0.8\%$.

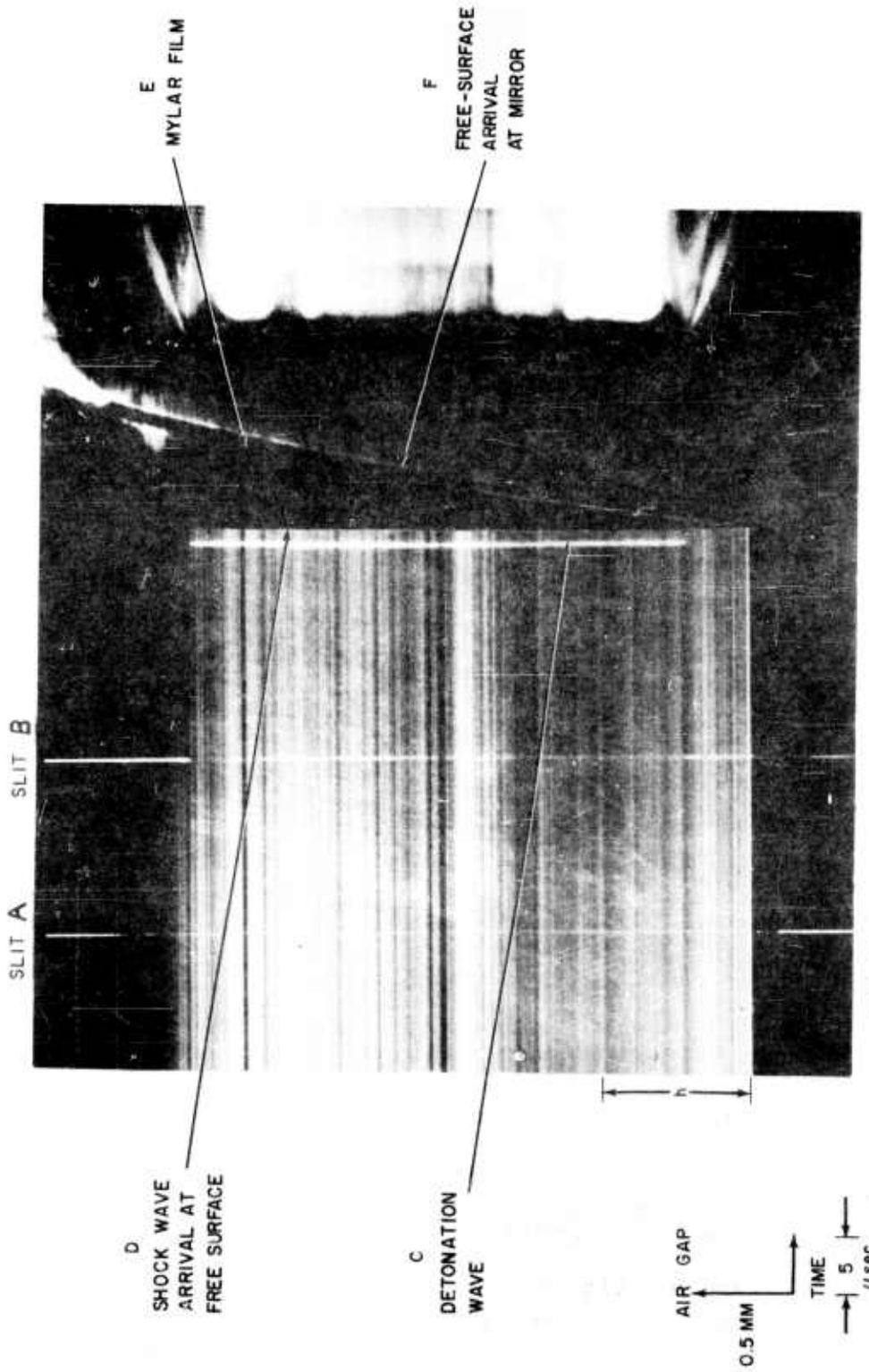

FIG 7 RECORD OF EXPERIMENTAL ARRANGEMENT SHOWN IN FIG. 2. TRANSIT TIMES OF THE FREE SURFACE AND PLASTIC FILM ARE OBSERVED AS A FUNCTION OF AIR GAP THICKNESS

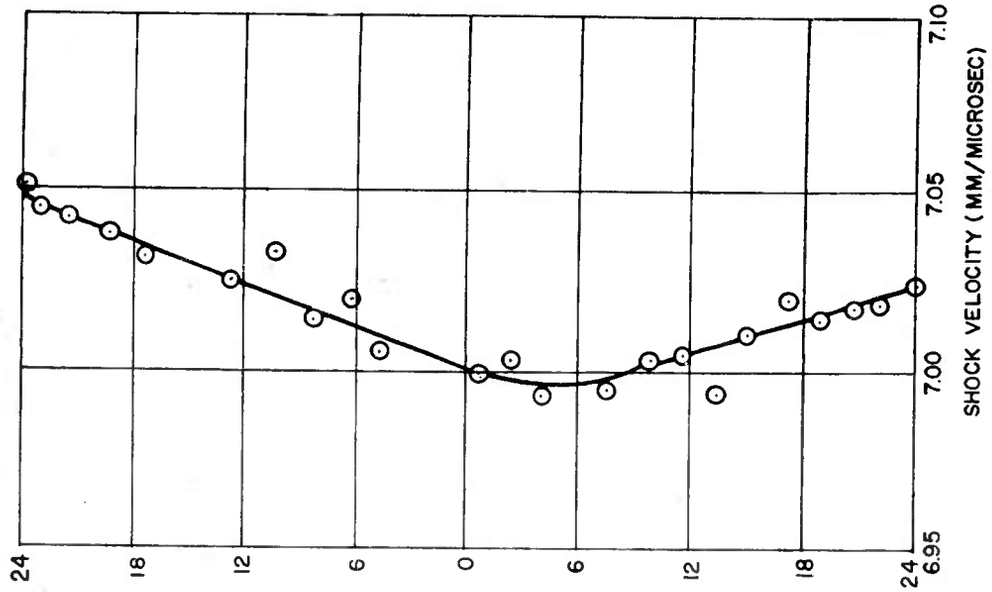

FIG. 8B SHOCK VELOCITY IN ALUMINUM AS A FUNCTION OF DISTANCE FROM AXIS OF SYMMETRY OF DETONATOR

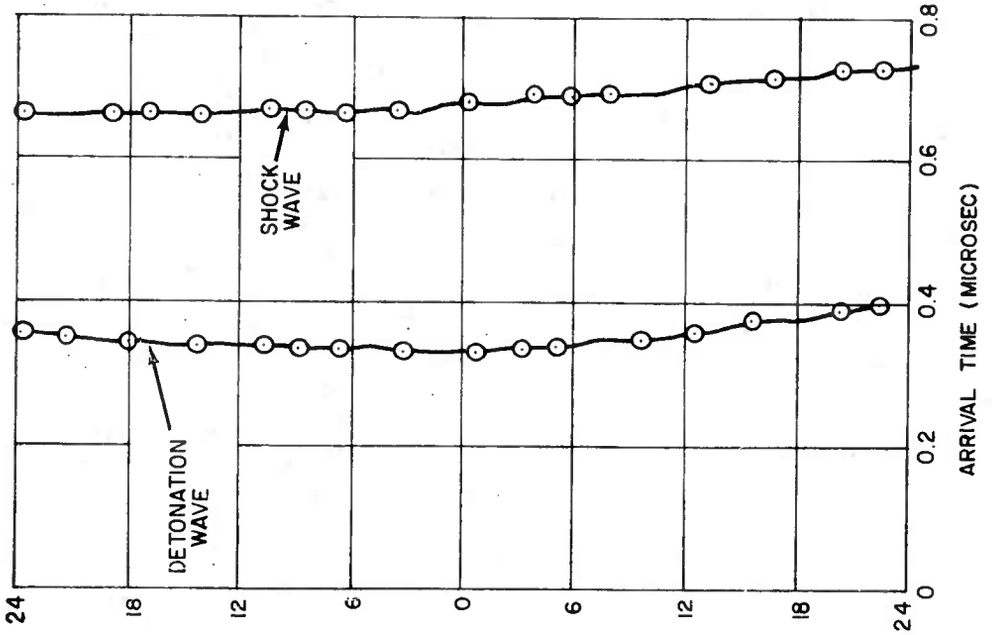

FIG. 8A DETONATION WAVE AND SHOCK WAVE ARRIVAL TIMES

DISTANCE FROM AXIS OF SYMMETRY OF DETONATOR (MM)

However, deviations of these magnitudes can produce errors of up to 6% in the shock velocities at the wedge surfaces if not corrected.

Free-surface Velocities. In computing free-surface velocities for wedge specimens the time of transit across the gap was measured as a function of position along the inclined plane of the wedge specimen. These data divided into the gap thickness give the free-surface velocities directly. In practice the velocity data are plotted and smoothed by direct observation from fitting a "best" line to the data points.

A number of comments should be made in connection with the free-surface velocity measurements. First is the direction of free-surface travel. The wedge assemblies were tilted so that the inclined plane of the wedge was normal to the optical axis of the camera (Figure 1A). The detonation wave impacted normally on the back surface and thus moved at an angle (i.e., the wedge angle) to the optical axis of the camera. Assuming that the free-surface particle motion was normal to the shock wave, the effective gap width (i.e., the free-run distance) was the measured air-gap thickness divided by the cosine of the wedge angle. Free-surface velocities obtained with this assumption agreed to within 0.1 per cent of values determined with an iterative procedure using Snell's law.

The reflected-light technique signals clearly the instant of free-surface takeoff. If reflected light also is used to signal free-surface arrival at the witness plate, an unambiguous time record results. However, if air-shock luminescence signals free-surface arrival at the witness plate, a bright flash of finite duration is observed. In the interpretation of these records the sharpest signal occurs at onset of light and this has been taken as indicating the arrival time although it obviously is indicating a too-early arrival time. A comparison of free-surface velocities obtained from arrival times measured by air-shock luminescence and by reflected light in simultaneous measurements would give a means for adjusting the free-surface velocities. Figure 9 shows such a comparison. Free-surface velocities obtained from measurement of arrival times by air-shock luminescence must be multiplied by 0.90 to give the correct free-surface velocity.

Another concern is the possibility of free-surface acceleration (because of shock reverberation) or deacceleration (because of material tensions or a compression of the air in the gap) while traversing the gap. Figure 10 shows the velocities obtained in observing both the Mylar film spall and an aluminum plate free-surface travel across a variable air gap arranged as indicated in Figure 2. Spall velocities are on the order of 40% higher than the free-surface velocities. Spall

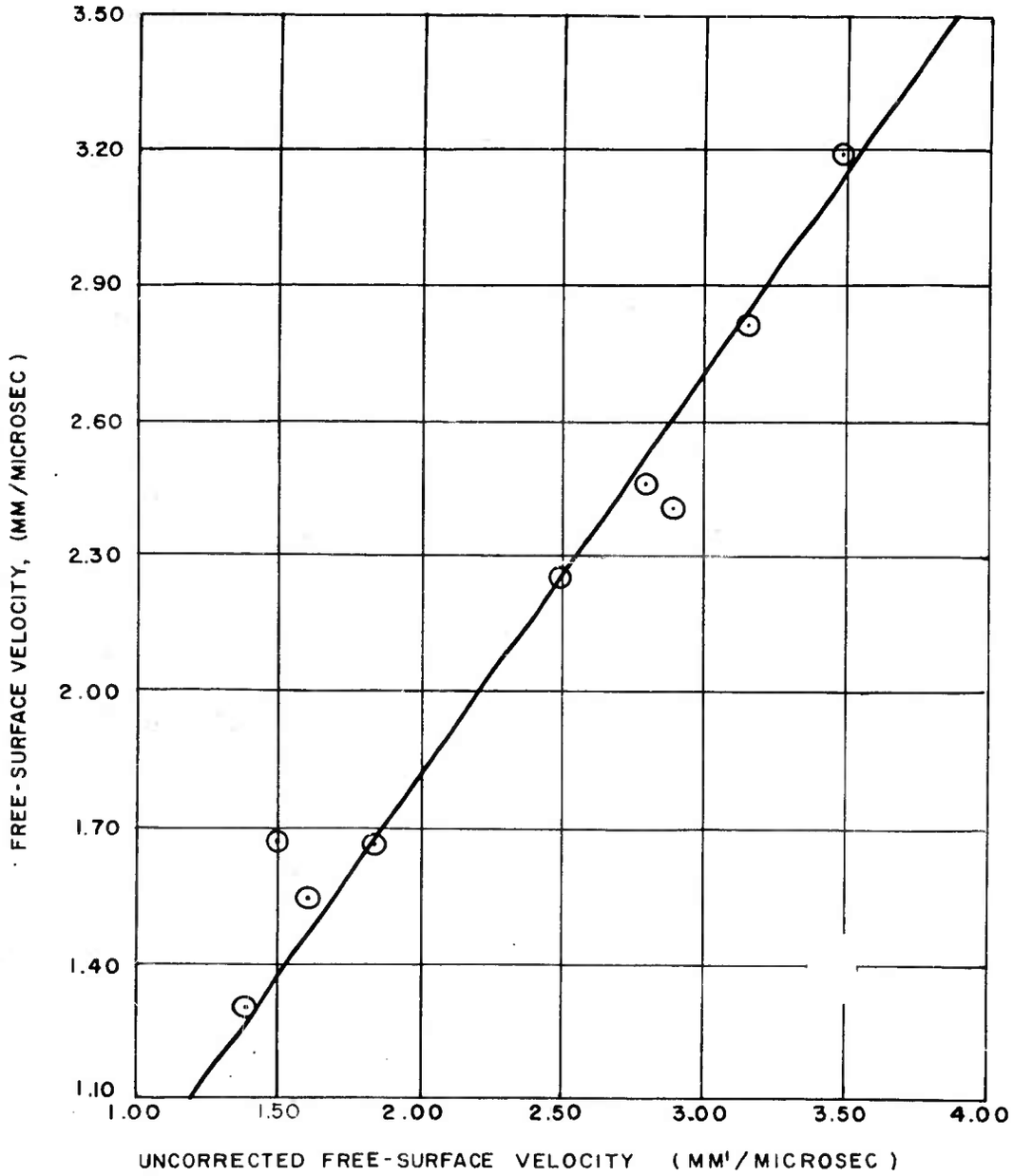

FIG. 9 VARIATION IN FREE-SURFACE VELOCITIES MEASURED BY AIR SHOCK LUMINESCENCE

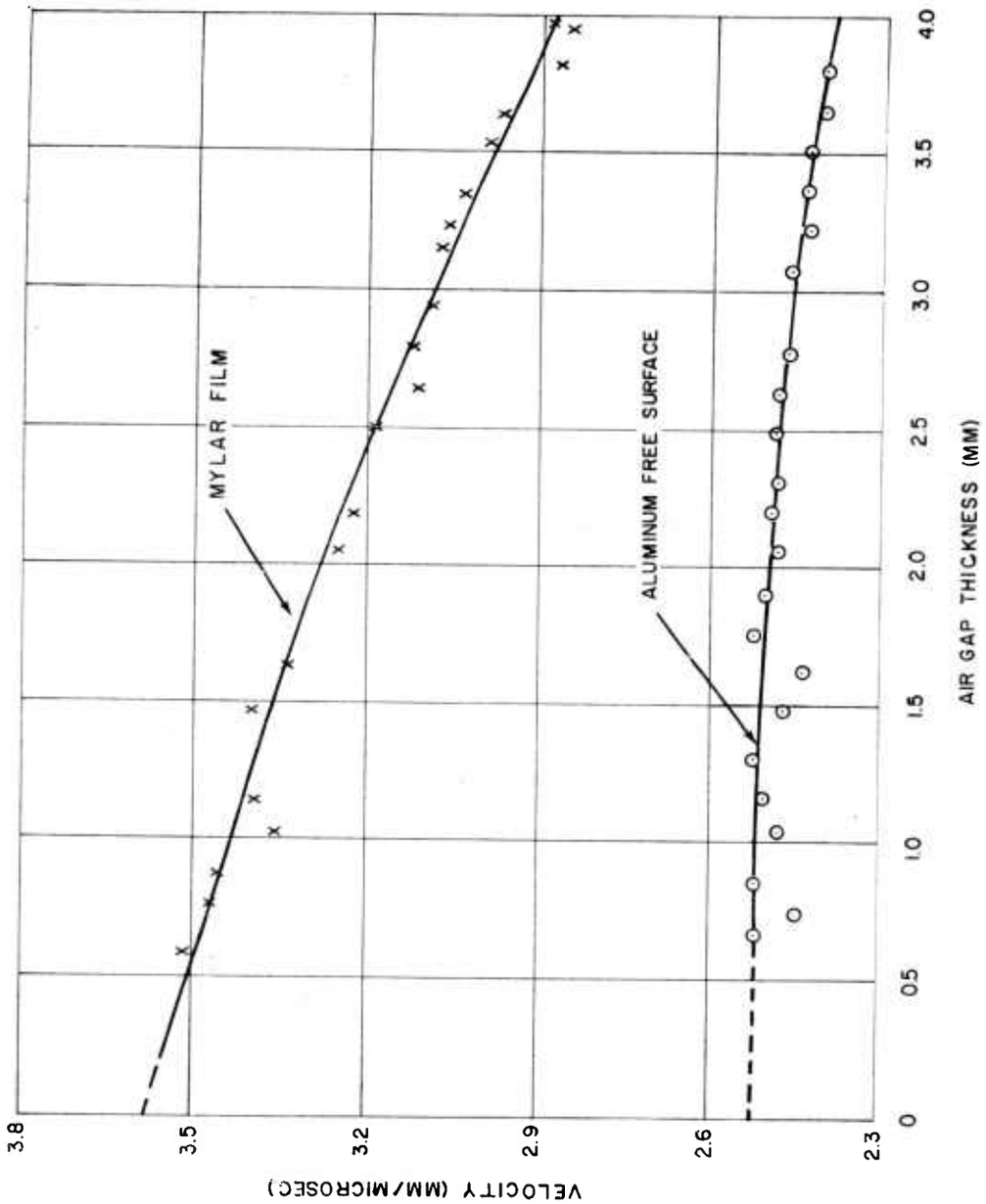

FIG. 10 FREE-SURFACE VELOCITIES OF ALUMINUM AND MYLAR FILM AS A FUNCTION OF AIR GAP THICKNESS

velocities, however, are highly dependent on the gap thickness and can be used only with care to give accurate free-surface velocities.

THE EXPERIMENTAL RESULTS

Shock velocity versus particle velocity in aluminum is plotted in Figure 11. The Rankine-Hugoniot values of pressure and relative volume are listed in Table I and plotted in Figure 12. The data are in good agreement with the results obtained by Walsh and Christian[8].

Shock velocities versus particle velocities for Plexiglas are plotted in Figure 13. The curve drawn through the data is a result of a least square parabolic fit. This includes a limiting value of 2.71 mm/microsecond recently measured for the longitudinal velocity of sound in Plexiglas by T. P. Liddiard, Jr. of the NOL(WO) using a Schlieren technique. Rankine-Hugoniot values for Plexiglas are plotted in Figure 14 and given in Table II.

The dynamic compressibility curve calculated for water by Rice and Walsh[9] is included for comparison with Plexiglas. Static measurements up to 40 kilobars by Bridgman[10] of the isothermal compressibility of Lucite* are also plotted. Although the static and dynamic compressibility curves do not describe the same states of the material, the two curves appear to be in fair agreement. A thermodynamic analysis shows that there is a temperature rise in the dynamic case, and for a direct comparison of the data this rise should be accounted for although it is small.

The errors in the experimental measurements of the shock velocity and free-surface velocity of aluminum are believed to be on the order of ±0.5% and ±1.5%, respectively. For Plexiglas these values are on the order of ±2% and ±3%, respectively. These errors result from uncertainties in machining the wedges, mounting the fixed stations for free-surface velocity measurements, shock-wave curvature, and in reading the photographic record.

The particle velocity was determined from measurements of the free-surface velocity using the approximation, $u_f \doteq 2u$.

---

* Lucite is Acrylic (Methyl methacrylate) resin made by E. I. DuPont de Nemours and Co., Inc., Wilmington 98, Delaware. Plexiglas is acrylate and methacrylate resin made by Rohm and Haas Co., Washington Square, Philadelphia 5, Pennsylvania. Each is a thermoplastic having a density range of 1.16-1.20 g/cm^3.

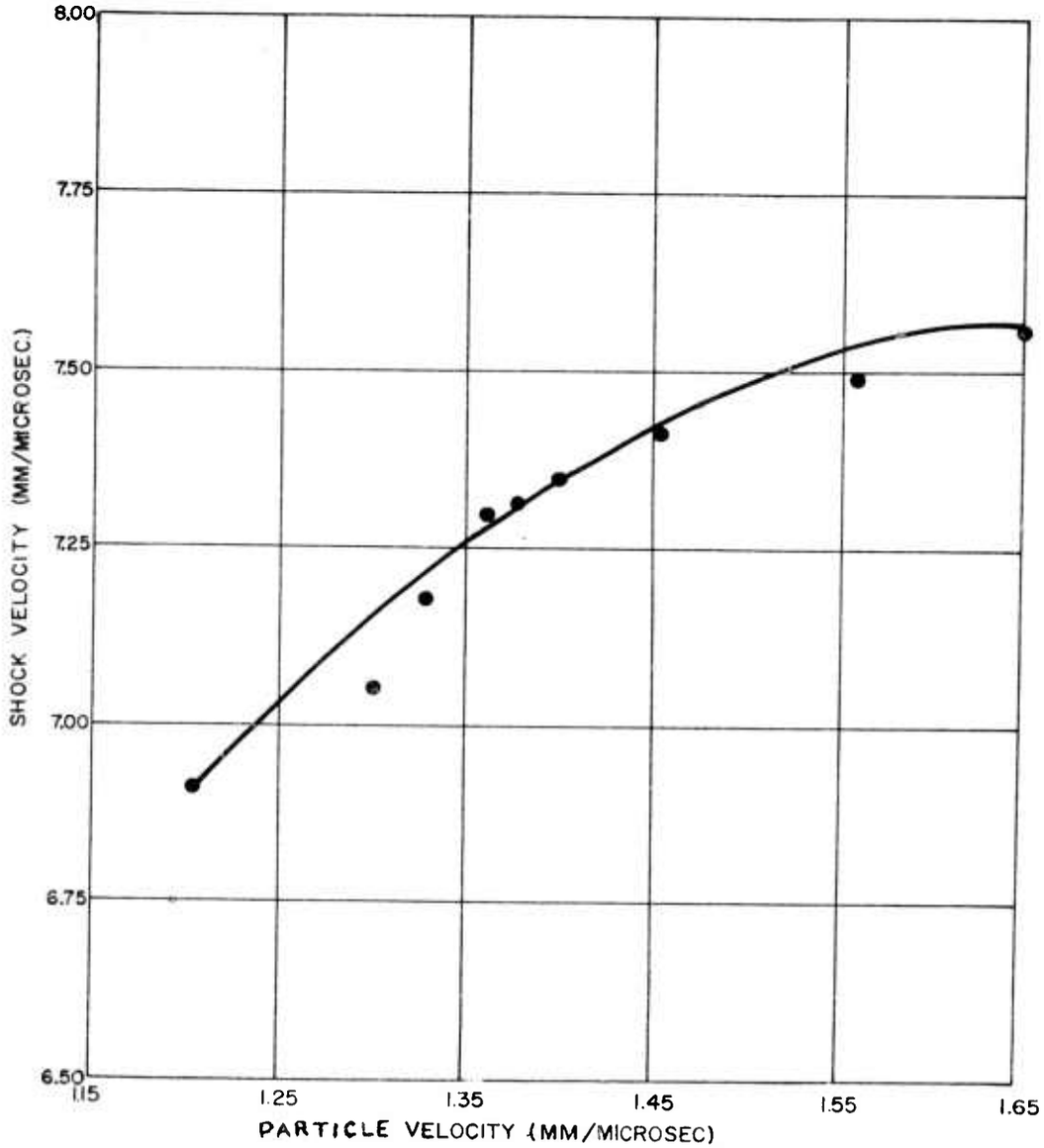

FIG. 11 VARIATION OF PARTICLE VELOCITY WITH SHOCK VELOCITY OF ALUMINUM

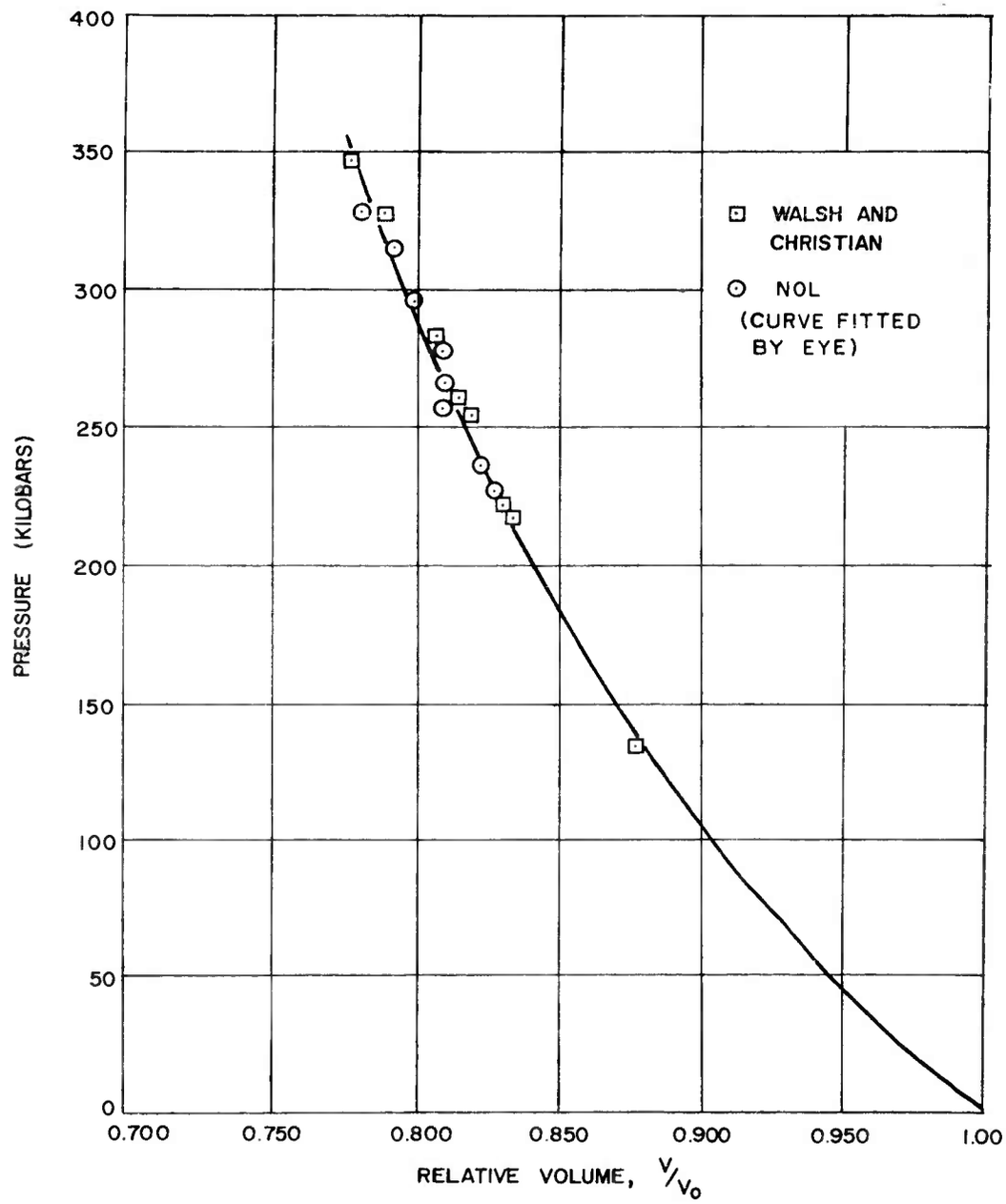

FIG. 12 THE DYNAMIC COMPRESSIBILITY OF ALUMINUM

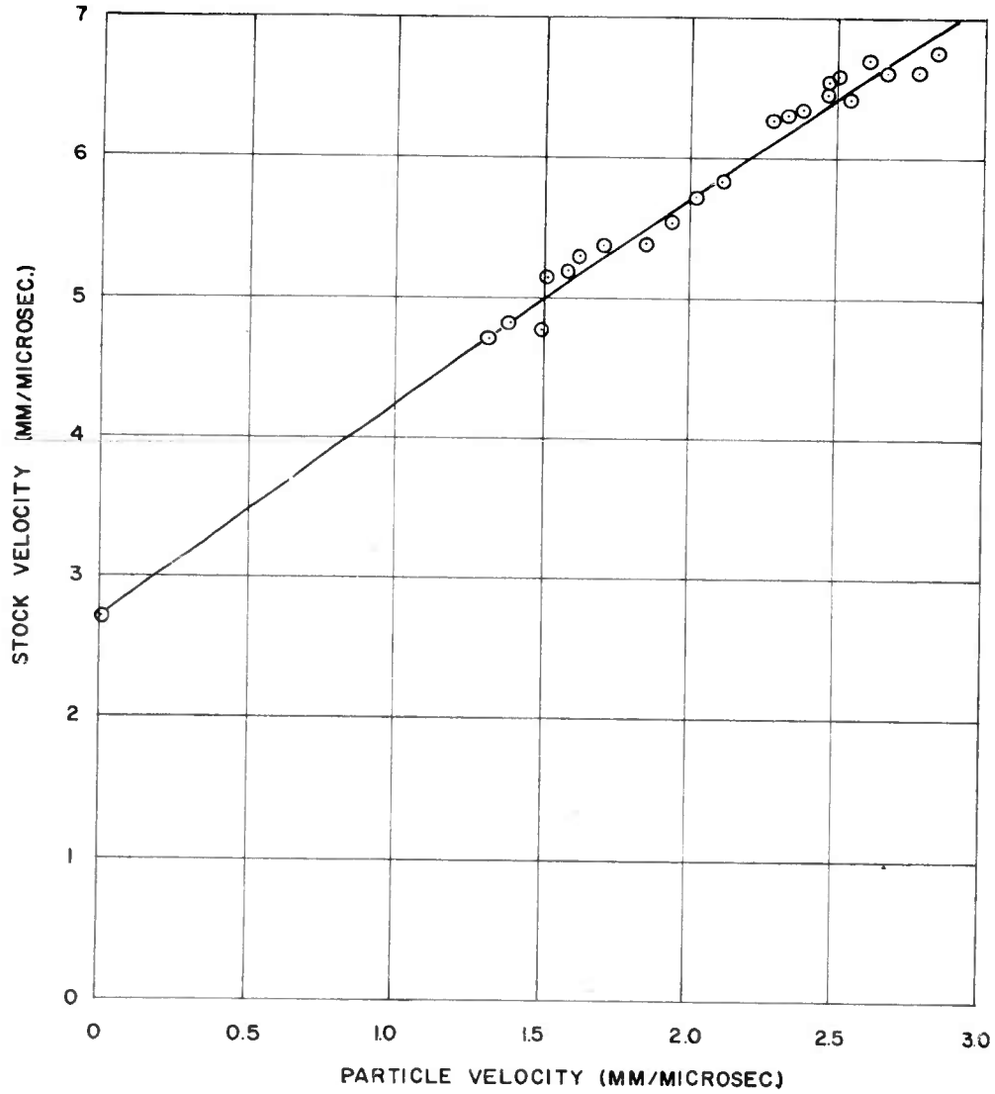

FIG. 13 PARTICLE VELOCITY AS A FUNCTION OF SHOCK VELOCITY IN PLEXIGLAS

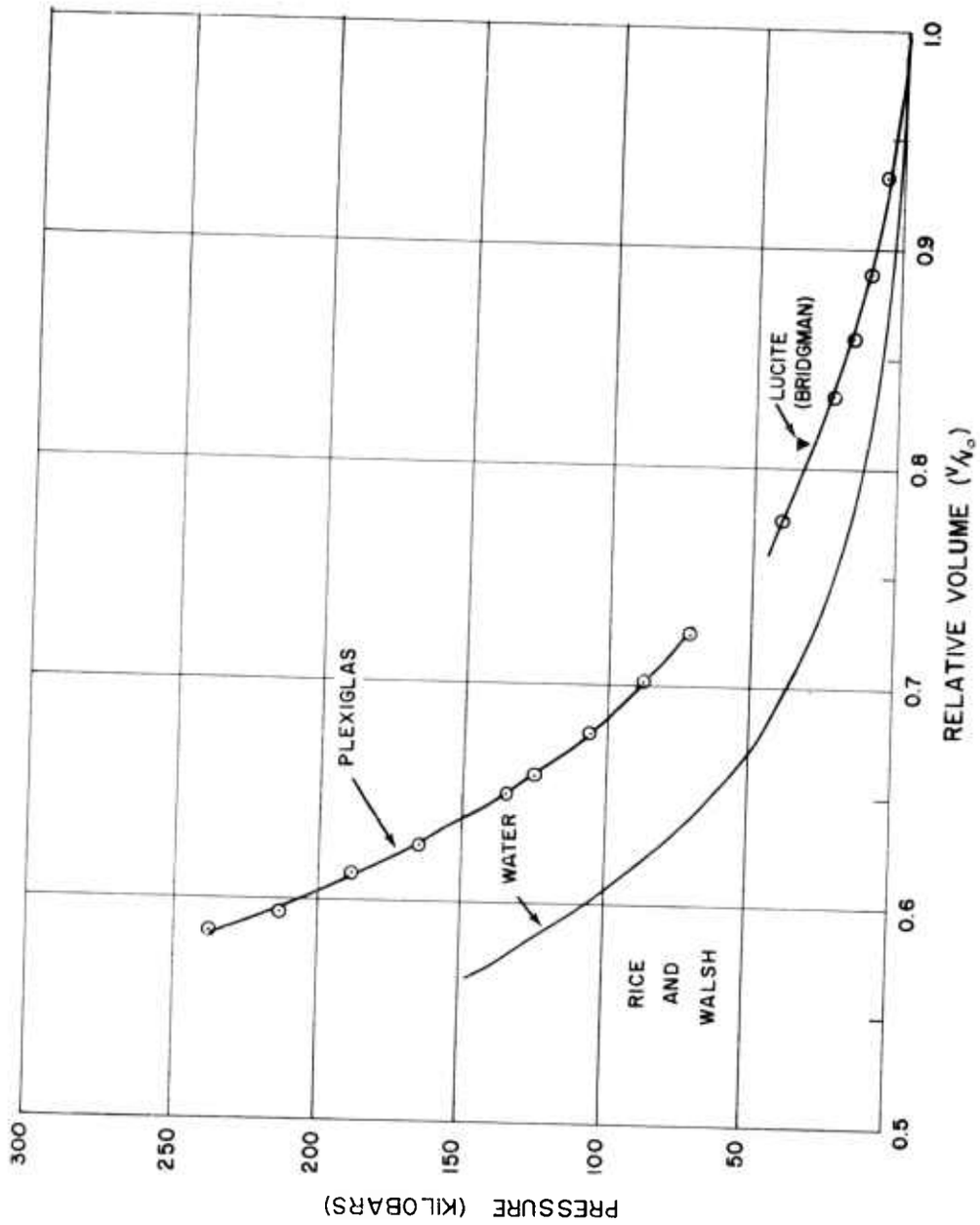

FIG. 14 THE DYNAMIC COMPRESSIBILITY OF PLEXIGLAS

TABLE I

Shock Wave Compression Data
for Aluminum

Shock Velocity (mm/μsec)	Free-surface Velocity (mm/μsec)	Particle Velocity (mm/μsec)	Pressure (kb)	Relative Volume V/V_o
7.54	3.30	1.65	327	.781
7.48	3.10	1.55	314	.793
7.42	2.90	1.45	291	.798
7.36	2.78	1.39	277	.811
7.31	2.75	1.38	273	.812
7.26	2.73	1.37	271	.812
7.20	2.71	1.36	265	.812
7.13	2.68	1.34	259	.811
7.07	2.66	1.33	255	.812
7.02	2.64	1.32	251	.812
7.00	2.50	1.25	236	.821
6.98	2.38	1.19	225	.830

TABLE II

Shock Wave Compression Data for Plexiglas

(ρ_o = 1.18 g/cm^3)

Shock Velocity (mm/μsec)	Free-surface Velocity (mm/μsec)	Particle Velocity (mm/μsec)	Pressure (kb)	Relative Volume V/V_o
4.68	2.60	1.30	71.8	.722
4.98	3.00	1.50	88.0	.699
5.27	3.40	1.70	106.0	.677
5.55	3.80	1.90	124.0	.658
5.84	4.20	2.10	145.0	.640
6.12	4.60	2.30	166.0	.624
6.39	5.00	2.50	189.0	.609
6.67	5.40	2.70	213.0	.595
6.94	5.80	2.90	238.0	.582

Walsh and Christian[8] have shown that this approximation is good to ±1% for aluminum up to pressures of 250 kilobars. Mallory[11] using the Pack, Evans, and James equation has calculated a difference of ±1.3% for a pressure in aluminum of 480 kilobars. Therefore the experimental free-surface velocity error is increased to ±2.5% and ±4% for aluminum and Plexiglas, respectively.

CONCLUSIONS

This report describes recent work in the adaptation of surface light-reflection techniques to high-speed photographic studies of non-luminous shock phenomena requiring microsecond time resolution. With careful experimentation the measurement of difference in shock velocities of ±0.5% may be achieved; similarly for the free-surface velocity an accuracy of ±3% may be obtained. When these techniques are applied to measurements of the shock parameter of specimens formed into wedges a significant increase in the amount of data per experiment is obtained. Thus the dynamic compressibilities of aluminum and Plexiglas were determined over a wide pressure range in single experiments.

Acknowledgment

The author gratefully acknowledges the advice and encouragement of Dr. S. J. Jacobs, Dr. A. D. Solem, and T. P. Liddiard in this study. The author is indebted to Dr. M. Solow and B. E. Drimmer whose criticisms were invaluable, and to W. A. Brown for valuable assistance in the execution of the experiments.

References

1. R. W. Goranson, D. Bancroft, B. L. Burton, T. Blechar, E. E. Houston, E. F. Gittings, and S. A. Landeen, Appl. Phys. 26, 1472 (1955).

2. J. H. Cook, Research (London) 1, 474 (1948).

3. T. P. Cotter, "The Structure of Detonation in Some Liquid Explosives", Doctor's Thesis, Cornell University (Sep 1953).

4. W. A. Allen and C. L. McCary, Rev. Sc. Inst. 29, 165 (1953).

5. J. M. Majowicz and S. J. Jacobs, "Initiation to Detonation of High Explosives by Shocks", NAVORD Report 5710, Mar 1958, (Confidential).

6. S. J. Jacobs and T. P. Liddiard, NAVORD Report 3620, Jan 1954, (Confidential).

7. R. Drosd and T. P. Liddiard, "Exploding Wires for Light Sources in Fast Photography", NOLM 10840, Feb 1950, revised Jun 1950.

8. J. M. Walsh and R. H. Christian, Phys. Rev. 97, 1544 (1955).

9. M. H. Rice and J. M. Walsh, Chem. Phys. 26, 824 (1957).

10. P. Bridgman, American Academy of Arts and Science, 76, 71 (1948).

11. H. D. Mallory, "The Propagation of Shock Waves in Aluminum", NAVORD Report 2864, Apr 1953.