UNCLASSIFIED

AD NUMBER
AD248517
LIMITATION CHANGES
TO: **Approved for public release; distribution is unlimited. Document partially illegible.**
FROM: **Distribution authorized to U.S. Gov't. agencies and their contractors; Administrative/Operational Use; OCT 1960. Other requests shall be referred to Army Transportation Research Command, Fort Eustis, VA.**
AUTHORITY
trecom per dup document

THIS PAGE IS UNCLASSIFIED

UNCLASSIFIED

AD 248 517

Reproduced
by the

ARMED SERVICES TECHNICAL INFORMATION AGENCY
ARLINGTON HALL STATION
ARLINGTON 12, VIRGINIA

UNCLASSIFIED

NOTICE: When government or other drawings, specifications or other data are used for any purpose other than in connection with a definitely related government procurement operation, the U. S. Government thereby incurs no responsibility, nor any obligation whatsoever; and the fact that the Government may have formulated, furnished, or in any way supplied the said drawings, specifications, or other data is not to be regarded by implication or otherwise as in any manner licensing the holder or any other person or corporation, or conveying any rights or permission to manufacture, use or sell any patented invention that may in any way be related thereto.

CATALOGED BY ASTIA
AS AD No. 248517

U. S. ARMY
TRANSPORTATION RESEARCH COMMAND
FORT EUSTIS, VIRGINIA

TREC 60-65

WIND TUNNEL TESTS AND FURTHER ANALYSIS OF THE FLOATING WING FUEL TANKS FOR HELICOPTER RANGE EXTENSION

Volume 2

GROUND AND AIR MECHANICAL INSTABILITY ANALYSIS

October 1960

R-197

XEROX

prepared by :

VERTOL DIVISION
BOEING AIRPLANE COMPANY
Morton, Pennsylvania

ASTIA
RECEIVED
JAN 4 1961
TIPDR C

DISCLAIMER NOTICE

When Government drawings, specifications, or other data are used for any purpose other than in connection with a definitely related Government procurement operation, the United States Government thereby incurs no responsibility nor any obligation whatsoever; and the fact that the Government may have formulated, furnished, or in any way supplied the said drawings, specifications, or other data is not to be regarded by implication or otherwise as in any manner licensing the holder or any other person or corporation, or conveying any rights or permission, to manufacture, use, or sell any patented invention that may in any way be related thereto.

* * *

ASTIA AVAILABILITY NOTICE

Qualified requestors may obtain copies of this report from

Armed Services Technical Information Agency
Arlington Hall Station
Arlington 12, Virginia

* * *

This report has been released to the Office of Technical Service, U. S. Department of Commerce, Washington 25, D. C., for sale to general public.

* * *

The publication of this report does not constitute approval by USATRECOM of the findings and conclusions contained herein. It is published only for the exchange and stimulation of ideas.

Wind Tunnel Tests and Further Analysis of the Floating Wing Fuel Tanks for Helicopter Range Extension

Volume 2

Ground and Air Mechanical Instability Analysis

R-197

VERTOL DIVISION

BOEING AIRPLANE COMPANY

CODE IDENT. NO. 77272

PREPARED BY	V. Capurso R. Ricks R. Gabel	REPORT NO. R-197	NO. OF PAGES
CHECKED BY		MODEL	
APPROVED BY		CONTRACT NO. DA44-177-TC-550	ITEM NO.
APPROVED BY		DATE March 1960	

REVISIONS

DATE	PAGES AFFECTED	REMARKS

Form No. 1357B (3-56)

SUMMARY

Mechanical instability of a helicopter range extension system utilizing hinged wing fuel tanks has been investigated for acceptable characteristics on ground and in the air. Ground instability is studied for the H-21, H-25, and H-34 helicopters with wing tanks through a simulated takeoff with full tanks to a landing with empty tanks. Instability ranges appear due to antisymmetric blade lag motions coupling with aircraft roll and lateral motions and wing flap and bending modes. Critical conditions are in the roll mode in takeoff with full tanks and in landing with empty tanks, but damping from the helicopter and wing oleo struts is always sufficient to control the instability.

In-flight mechanical instability is also shown to be possible. It results from antisymmetric blade lag motion coupling with aircraft roll and lateral oscillations at a reference natural frequency provided by rotor thrust and wing aerodynamic spring effects. Blade flap-lag Coriolis coupling is also included and tends to accentuate the unstable conditions. The winged configurations of the H-21, H-25 and H-34 helicopters are marginally stable at normal rotor speed based on calculated wing aerodynamic damping estimates. Wing damping obtained from wind tunnel model tests is larger than the calculated damping however, so that the winged configurations should be satisfactory under all conditions. A build-up ground and flight test program, similar to that performed on new model helicopters is recommended, however, to insure that no dangerous instability exists.

REV

TABLE OF CONTENTS

		PAGE
I.	Introduction	1
II.	Method of Analysis	3
	A. Ground Instability	3
	B. Air Instability	6
III.	Discussion of Results	8
	A. Ground Instability	8
	B. Air Instability	25
IV.	Conclusions	35
V.	References	36
Appendices		
A.	Ground Instability	A-1
	1. Ground Instability Analysis Pyramid Gear	A-1
	2. Ground Instability Analysis Axle Gear	A-15
	3. Digital Computer Program for Ground Instability	A-20
	4. Ground Instability Calculations, VERTOL H-21 Helicopter	A-28
	5. Ground Instability Calculations, VERTOL HUP-2 Helicopter	A-48
	6. Ground Instability Calculations, SIKORSKY H-34 Helicopter	A-67
B.	Air Instability	B-1
	1. Air Instability Analysis	B-1
	2. Air Instability Analog Program	B-30
	3. Air Instability Calculations, VERTOL H-21 Helicopter	B-34
	4. Air Instability Calculations VERTOL HUP-2 Helicopter	B-42
	5. Air Instability Calculations SIKORSKY H-34 Helicopter	B-54

REV

LIST OF ILLUSTRATIONS

Figure		Page
1	Mechanical Instability Analysis Chart, Vertol H-21, Without Wing Fuel Tanks	9
2	Mechanical Instability Analysis Chart, Vertol H-21, With Wing Fuel Tanks	12
3	Mechanical Instability Analysis Chart, Vertol H-25, Without Wing Fuel Tanks	16
4	Mechanical Instability Analysis Chart, Vertol H-25, With Wing Fuel Tanks	18
5	Mechanical Instability Analysis Chart, Sikorsky S-58, Without Wing Fuel Tanks	21
6	Mechanical Instability Analysis Chart, Sikorsky S-58, With Wing Fuel Tanks	23
7	Air Instability Analysis, Vertol H-21, Analog Output	27

REV

LIST OF TABLES

Table		Page
1	Mechanical Instability Analysis, Vertol H-21 Helicopter, Available/Required Damping Without Wing Fuel Tanks	10
2	Mechanical Instability Analysis, Vertol H-21 Helicopter, Available/Required Damping, With Wing Fuel Tanks	13
3	Mechanical Instability Analysis, Vertol H-25 Helicopter, Available/Required Damping, Without Wing Fuel Tanks	17
4	Mechanical Instability Analysis, Vertol H-25 Helicopter, Available/Required Damping, With Wing Fuel Tanks	19
5	Mechanical Instability Analysis, Sikorsky S-58 Helicopter, Available/Required Damping, Without Wing Fuel Tanks	22
6	Mechanical Instability Analysis, Sikorsky S-58 Helicopter, Available/Required Damping, With Wing Fuel Tanks	24
7	Air Instability Analysis, Results, Vertol H-21 Helicopter	26
8	Air Instability Analysis Results, Vertol H-25 Helicopter	32
9	Air Instability Analysis Results, Sikorsky S-58 Helicopter	34

REV

I. INTRODUCTION

The present mechanical instability study is part of an analytical and wind tunnel study being conducted under the reference 1 Transportation Research & Engineering Command Contract. The program is aimed at the development of a means for helicopter ferry range extension through application of a floating fuel wing concept. An initial feasibility study of the floating wing concept was conducted by VERTOL under an earlier contract, reference 2, and the results reported in reference 3. The present analytical and wind tunnel investigation is under the reference 1 contract and is based on a VERTOL proposal, reference 4. The mechanical instability study is a part of Phase I of the contract, and is reported here separate from the wind tunnel work. Additional dynamic studies comprising vibration and flutter calculations for the floating wing system are in progress under Phase II and will be reported separately when completed.

The range of present helicopters with normal fuel load is less than 400 nautical miles. Even with additional internal tanks, the helicopter range is less than 1100 miles. With floating wings, the range can be extended to as much as 2400 miles, corresponding to the longest over-water distance on the Pacific Ocean ferry route.

Each floating wing contains compartmented fuel tankage connected by lines to the helicopter's main tank, The wing lift supports the fuel weight that it carries, and the helicopter acts as a tow to propel the wing forward. Wing attachment to the helicopter is through a hinge so as to eliminate the bending moments applied at the fuselage by conventional wings, thus avoiding the addition of extensive wing carry through structure to the helicopter.

The hinge line is not longitudinal, but is skewed aft as shown,

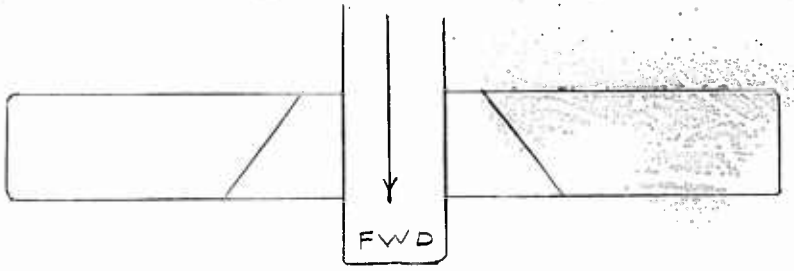

As fuel is consumed and the wing becomes lighter, it tends to flap upward about its hinge. Because of the skewed orientation, the angle of attack at any chord line is reduced as the wing flaps up, the lift is reduced, and the wing flaps downward to a new mean position. Full span pilot controlled wing flaps are also provided, so that the trim attitude of the wing may be adjusted; these are also used as high lift devices during the running take-off.

REV

When the wing-helicopter combination is on the ground, each wing is supported by its own landing gear. The gear is a conventional shock strut in that it can absorb the impact energy of the landing wing and can also incorporate an oscillatory damper to assist in preventing ground instability. For simplicity, the dynamic characteristics of the VERTOL YHC-1A main landing gear were used in the ground instability studies since this gear generally meets the requirements of the installation. It is noted, however, that the wheels must be able to swivel for ground handling but it is assumed they would be locked in the trail position for takeoff and landing.

The possibility of ground or air mechanical instability is investigated here for helicopters equipped with floating wings. Three transport helicopter types representative of current Army inventory are included, the Sikorsky H-34, VERTOL [illegible] VERTOL H-25.

These aircraft use two basic types of helicopter main landing gear, the pyramid gear used on the VERTOL H-21 AND H-25, and the axle gear used on the SIKORSKY H-34. The pyramid gear consists of a two member horizontal truss hinged at the fuselage attachments with the wheel mounted at the apex, whose vertical motion is restricted by an oleo between the truss apex and a higher point on the fuselage. The axle gear uses a single crank-type member mounted in a bearing on the fuselage with the wheel at the throw of the crank, and the oleo restricting vertical wheel travel. Separate analyses of these two gear types are necessary.

The method of analysis, and a discussion of the results are given in the following sections, along with conclusions as to the acceptability of the instability characteristics. Appendix A presents the ground instability analysis, and the detailed numerical data for the H-21, H-25 and H-34; Appendix B presents the same information for the air instability case.

REV

II. METHOD OF ANALYSIS

A. Ground Instability

1. General

There exists in all rotary wing aircraft the possibility of encountering a condition of instability commonly called "ground resonance" if certain design criteria are not met. Under these circumstances, the vast kinetic energy of rotation is transferred into producing divergent oscillation of the fuselage on its landing gear, and may become so violent as to damage or destroy the aircraft. This unstable condition involves blade depatterning in which the individual rotor blades oscillate in the plane of rotation in such a manner that the combined center of gravity of all the blades does not coincide with the shaft center, but whirls about it in some eccentric locus. This motion couples with the motion in a natural mode of the helicopter on its landing gear in such a phase relation that the motion becomes divergent. Fundamental analytical work on the ground instability problem was performed by Coleman in reference 5, and more recently compiled in reference 6. Other analytical approaches have been presented in work such as references 7, 8, and 9.

All modern helicopters employ some device or design feature aimed at preventing or controlling this destructive phenomenon. One means is to use rotor blades with the lowest natural frequency of blade lag motion higher than the maximum operating rotor speed. While this is effective from the ground instability standpoint, it penalizes the blade root design by requiring blade structure heavy enough to carry the root moments, instead of the zero root moments existent with hinged blades. A common means of instability prevention for hinged blades is the use of lag dampers at the hinges, and dampers in the landing gear shock struts. Their combined energy dissipation capacity must be sufficient to prevent divergence of any oscillation. An alternate approach is to place the natural frequencies of the helicopter on its landing gear spring so that the related instability range is clear of the normal rotor speed and will therefore not be excited.

Present practice aims at a combination of the last two procedures, that is, to place natural frequencies so as to have no instabilities appearing in the normal rotor speed range, and to also provide damping adequate to prevent the growth of any instability.

2. Helicopter Without Wings

With conventional helicopters, two regions of instability are generally considered; the first is a predominantly lateral helicopter motion accompanied by blade depatterning whose frequency is located well below normal rotor speed, usually about 100 CPM; the second is a predominantly roll helicopter motion about a line close to the center of gravity, also accompanied by blade depatterning, and usually located close to or in the normal rotor operating speed range. It is this roll motion which test experience has shown to be of major concern.

REV

Each instability frequency region is located at a rotor speed some 10% to 60% above a "reference frequency". This reference frequency is merely one of the two coupled roll-lateral natural frequencies of the helicopter mass and inertia on its landing gear oleo shock strut and tire springs. The springs whose rates are paramount in setting the reference natural frequencies are the oleo air spring,- a widely varying parameter dependent on extension, the lateral structural rate of the landing gear, the radial tire spring rate, and the lateral tire spring rate.

For the important roll mode, these springs may be thought of as forming an equivalent roll spring about a horizontal line running fore and aft through the heli-

copter center of gravity. The oleo vertical air spring rate and the tire radial rate add in series to form an equivalent rate K_V which is lower than either spring taken singly. This spring on the left landing gear, and its equal counterpart on the right landing gear act through the wheel tread distance 2e to form a rotational spring with rate $2K_Ve^2$ about the c.g. Similarly, the tire lateral spring rates add in series with the lateral structural spring to form an equivalent lateral spring K_L, which acts through a vertical arm h reaching from the ground contact up to the c.g. to form a rotational spring with rate $2K_Lh^2$. The total rotational roll spring $2K_Ve^2 + 2K_Lh^2$, together with the roll inertia of the helicopter essentially determine the roll mode reference frequency.

Thus for conventional gear, at low percents airborne, all the spring elements - oleo and tire, contribute to a high reference frequency; at high percents airborne, the oleo and tire vertical spring combination are negligible, and the lateral springs are principally responsible for the reference frequency.

If spring rate limitations render the placement of the instability band above the normal rotor speed impractical, or if conservative design is practical, sufficient damping in the oleo strut and lag damper are provided so that the growth of any instability can be prevented. The quantity of damping present in a given condition is generally measured by a damping ratio , a ratio of available to required damping.

$$\mu = \frac{C_r \; C_\xi}{B_y \; B_\xi}$$

where C_r = effective damping at the rotor hub in the rth mode of the helicopter produced by the oleo struts
C = damping produced by each blade lag damper
B_yB_ξ = damping product required for neutral stability from reference 6.

When the ratio, μ , is greater than unity, there is then more damping available to control the instability than is actually required, and μ may be viewed as a sort of margin of safety. The term C_r, effective damping at the hub, is obtained through equating the damping energy produced by the oleos in a given mode to an equivalent mathematical damper at the rotor hub operating in the lateral hub direction. Thus for y and q hub and oleo velocities respectively,

$$\text{Damping Energy} = \tfrac{1}{2}\, C_r\dot{Y}^2_{hub} = \tfrac{1}{2} \sum_{OLEOS} C_o\dot{q}^2_{oleo}$$

or

$$C_r = \sum_{OLEOS} C_o\dot{q}^2_{oleo} \;/\; \dot{Y}^2_{hub}$$

Occasionally, the mode shape of the reference natural frequency is such that motion and hence velocity at the oleo are much larger than that of the hub, so that $(q/y)^2$ becomes large, and the damper C_r and finally the damping ratio turn out to be large numbers. This means that the damping available is well over that required, and the helicopter is in a very safe position. This will be found to be true in a number of the numerical cases presented herein.

3. Helicopter With Wings

The addition of floating wings to the helicopter introduces a number of changes to the ground instability characteristics. The weight and inertia of the combination aircraft are considerably increased, the wing landing gears introduce additional ground springs, and aerodynamic dampers and springs must be included in the analysis, due to the addition of the floating wings. Also, the bending natural frequency of the wing is near enough to rotor speed to be of interest.

Instead of two coupled modes, lateral and roll as in the standard case, there are four coupled modes with the winged configuration. These are wing rigid body flap about the wing hinge, fundamental bending of the wing as a pinned-free beam and lateral and roll motion about the helicopter c.g. as before. In addition,

REV

the motions of the helicopter main gear oleo and the wing gear oleo are handled as separate coordinates. The complete equations of motion are developed in Appendix A and lead to the following set of equations stated in matrix form.

$$\begin{bmatrix} K_{11}-M_{11}\omega^2 & K_{12} & K_{13} & K_{14} & K_{15} & \\ K_{12} & K_{22}-M_{22}\omega^2 & K_{23}-M_{23}\omega^2 & K_{24}-M_{24}\omega^2 & K_{25} & K_{26} \\ K_{13} & K_{23}-M_{23}\omega^2 & K_{33}-M_{33}\omega^2 & K_{34} & & K_{36} \\ K_{14} & K_{24}-M_{24}\omega^2 & K_{34} & K_{44}-M_{44}\omega^2 & & K_{46} \\ K_{15} & K_{25} & & & K_{55} & \\ & K_{26} & K_{36} & K_{46} & & K_{66} \end{bmatrix} \begin{bmatrix} y \\ \alpha \\ \alpha_w \\ H_1 \\ \alpha_s \\ v \end{bmatrix} = 0$$

where y = lateral motion of helicopter c.g.
α = roll motion of helicopter c.g.
H_1 = generalized coordinate of first pinned-free wing bending, top deflection
α_s = angular coordinate for main gear oleo motion
v = vertical coordinate of wing gear oleo motion
α_w = angular coordinate of wing about hinge

and the M_{jk} and K_{jk} values are the effective or actual mass and spring quantities. These are detailed in Appendix A. The determinant is solved for natural frequencies and modes by insertion of trial frequency values, and repeated numerical expansion of the determinant to a residual whose zeros indicate the naturals. Solution is carried out on an IBM 650 computer. Effective mass and damping values at the rotor hub in each mode are also calculated as part of the same program. Coleman theory, reference 6, is then applied and instability range and damping requirements for each mode are calculated.

Numerical data for each aircraft are obtained from weight and stiffness calculations for the helicopter and wings, tire stiffness data manufacturer's test data, and oleo stiffness data from pneumatic calculations for each strut. The data is obtained for a number of percents airborne during takeoff and landing.

The take-off attitude differs markedly from that of conventional helicopters. As the combined drag of the helicopter and wing is four times that of the helicopter itself, a nose-down attitude during take-off must be maintained in order to tilt the rotors forward and get sufficient forward propulsion force. The following procedure was suggested in reference 3.

1. The pilot aligns the system with the runway.

2. The proper wing flap setting is made.

3. With the helicopter in a three point attitude, the pilot starts accelerating the system down the runway.

REV

4. As the speed increases, the pilot rotates the helicopter about the nose wheel to a nose down attitude lifting the helicopter main gear off the ground. Since the wing weight is essentially supported by its own landing gear or by aerodynamic lift, the rotors support only the weight of the helicopter. Therefore, the nose gear need not support any weight, but is used for an attitude reference only.

5. As take-off speed is approached, the wing becomes self supporting. The wing will automatically make any adjustments necessary for changes in angle of attack and speed during the take-off and climb out.

6. Finally, at take-off the helicopter nose wheel and wing wheels leave the ground and the craft is fully airborne.

The landing technique is essentially the inverse of take-off.

B. Air Instability

The possibility of mechanical instability in flight has been postulated for some time, but up to the present, no known analysis has been made for helicopters with lag hinges. A related analysis for rotors with rigid blades was made by Hohenemser in reference 10.

It is first presumed that a condition of instability could exist in flight which would be similar to that of the ground instability condition, i.e., lateral and roll motion of the helicopter about its c.g., and depatterning of the blades in the lag plane. Aerodynamic blade forces are then written and summed to form a lateral force and rolling moment about the helicopter c.g. As an approximation, the airloads are derived based on a rotor hovering condition in order to permit a practical analog solution. Therefore, forward speed does not appear in the blade tangential velocity expression in Appendix B-1. These forces take the place of the ground spring terms in the conventional ground analysis and give the helicopter a low frequency roll response which is the same as that obtained in flight handling stability analyses where stability derivative approaches are used. The flapping equilibrium of each blade about its flap hinge is also written and represents the aerodynamically forced flap motion. Flapping couples inertially to lag through the Coriolis acceleration terms wherein blade flapping velocities produce lagging accelerations in a rotating field. The lag equations of motion for each blade are also explicitly stated.

One more equation of motion is necessary to include the wing motion about its flap hinge. The spring appearing in the wing equation is an aerodynamic one, and expresses the tendency of the wing to return to its equilibrium position when disturbed. This is similar to the wing's adjustment to weight variation as fuel is consumed; when the wing flaps up about its skewed hinge, the angle of attack is reduced at all chord lines, the lift is reduced, and the wing flaps down to its mean position.

REV

In both the flapping and lagging equations, most coefficients are a function of the blade azimuth position with respect to a reference at trail aft for the first blade of the set. The individual flap equation for each blade of the rotor, and the individual lag equation for each blade of the rotor may be eliminated along with the azimuth function by the introduction of quasi-normal coordinates. In the lag plane two coordinates result which represent the fixed system rectangular coordinates of the blade pattern c.g.; in the blade flap direction, the two quasi-normal coordinates are the inclinations of the thrust vector in the fixed lateral and longitudinal planes.

Several sets of numerical values are obtained for the coefficients of the complete equations to cover variations in gross weight and rotor speed. These are programmed on an analog computer, and response examined for a step initial condition on the lateral coordinate. Instability is apparent by the growth of the coordinates without limit. These calculations are carried out for three aircraft conditions: (1) helicopter without wings, (2) helicopter with wings and 100% fuel load, and (3) helicopter with wings and 0% fuel load.

REV

III. DISCUSSION OF RESULTS

A. Ground Instability Analysis

1. H-21 Helicopter

Figure 1 presents the two undamped instability regions of the H-21 helicopter, without wings, which are generally considered for conventional helicopters. These are calculated for an 11,100 lb. gross weight, corresponding to the helicopter configuration just before the wings are attached. It is noted that this configuration differs from the normal without-wings configuration, in that the latter has a gross weight of 13,500 lbs. and an 80" vertical ground to c.g. distance, while the Figure 1 configuration has a gross weight of 11,100 lbs. and a 90" vertical ground to c.g. distance. In Figure 1, the predominantly lateral mode instability is below a rotor speed of 100 RPM for all airborne conditions; the predominantly roll mode instability region is in the vicinity of 425 RPM for 0% airborne with a gradual lowering until at about 80% airborne the instability is at the normal operating speed.

The intersection of the instability band with the normal rotor speed band is of concern, since excitation would be possible if there were no damping. Definition of the instability region beyond 75% airborne, where the oleo strut reaches its full extension, is somewhat controversial. Since the strut piston is bottomed against a metal stop on the barrel, the spring rate of the oleo can be considered to have changed from a soft air spring to a stiff metal spring. This stiffer spring would then cause the instability range to rise at high percents airborne. Should an oscillation begin, however, the oleo piston would move off the metal stop and the oleo air spring would again become active and lower the instability range. Figure 1 takes the conservative approach and shows the instability range passing through the rotor operating band.
The blade-Oleo damping combination is sufficient to control any instability and prevent its growth. Table 1 presents ratios of available to required damping for various percents airborne and for both lateral and roll modes. All of these values are greater than unity, indicating sufficient damping. In the region above 75% airborne where the instability is shown in the operating region and damping is actually required, Table 1 shows a large damping ratio of 5.91.

REV

MECHANICAL INSTABILITY ANALYSIS OF
VERTOL H-21 HELICOPTER RANGE EXTENSION
WITHOUT WING FUEL TANKS
Gross Weight: 11,100 lbs.

INSTABILITY REGION vs. AIRCRAFT ATTITUDE

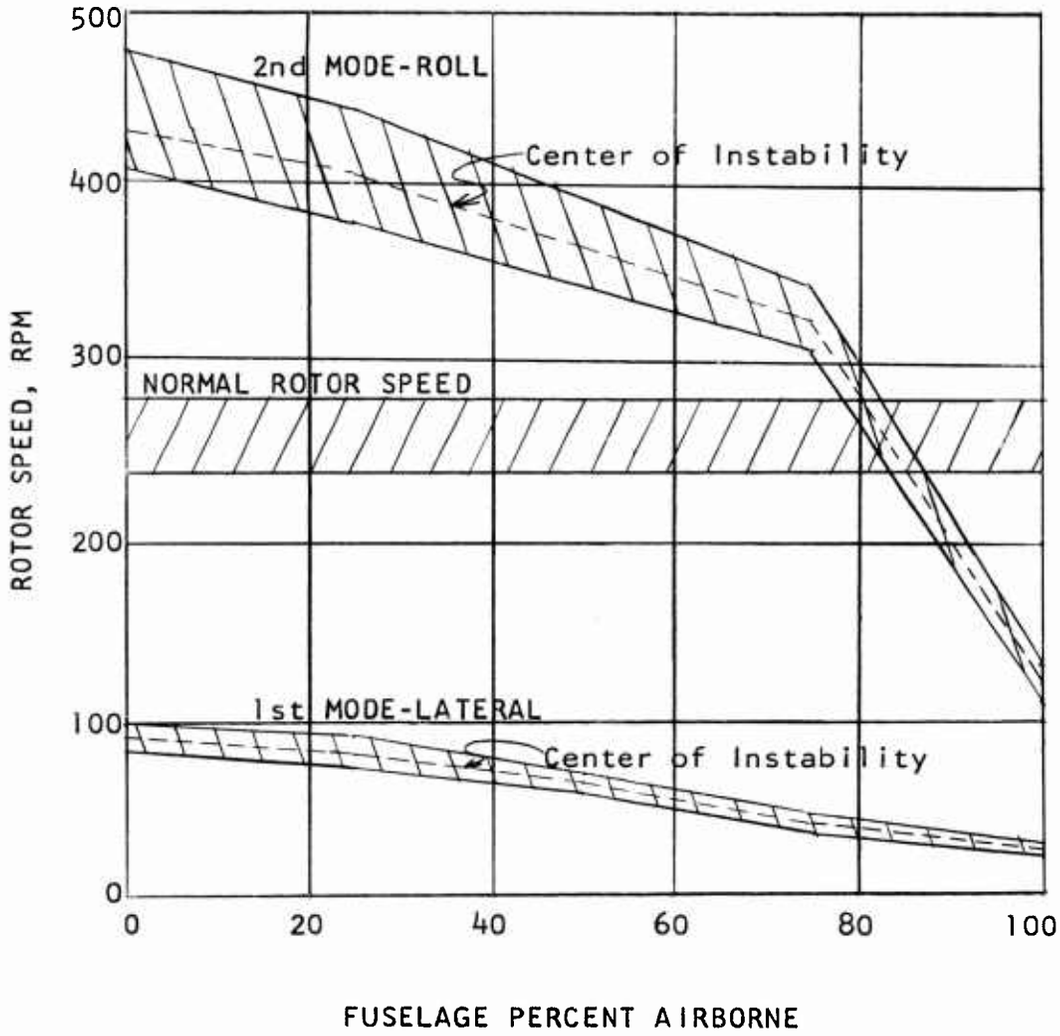

REV

TABLE 1

VERTOL H-21 HELICOPTER

AVAILABLE / REQUIRED DAMPING

		Without Wing Fuel Tanks				
Case		#1	#2	#3	#4	#5
Fuselage, Percent Airborne		0	25	50	75	100
Mode						
Available / Required Damping	Fuselage, Lateral	4.29	8.38	26.08	144.38	236.50
	Fuselage, Roll	1.06	1.65	3.13	* 5.91	56.34

* Center of instability in rotor speed band

REV

Ground instability results for the H-21 helicopter with wing are presented in Figure 2 as a sequence of ground conditions which define the normal take-off procedure with 100% fuel, followed by a landing with 0% fuel. Only the centers of the unstable regions are shown for simplicity. The portion of the plot where wing and helicopter are fully airborne is obtained using the ground analysis. This portion of the plot covering 100% airborne is shown for completeness but is not really valid; the valid air instability results are presented later in the Air Instability Section. The instability centers shown are associated with the 4 degrees of freedom considered in the analysis, lateral and roll as in a conventional ground instability analysis plus the rigid and flexible wing modes.

In general, with the exception of the empty wing roll instability, only the flexible wing instability center exists above the normal rotor speed range; the instability centers of the rigid wing flapping, and lateral and roll modes of the fuselage appear below the normal speed range. For the wing empty, the roll instability appears similar to the instability which exists for the helicopter without wings, having an unstable range above the normal speed range and gradually decreasing until at 80% airborne the unstable region is at normal rotor speed. Another critical area is at 0% airborne for the 100% fuel case where the roll instability center is just slightly below the normal rotor speed.

Table 2 describes the damping ratios present for all the instability cases of Figure 2. In all instances, the available damping is larger than the required damping. For the fuselage roll mode with empty wings, which passes through the operating rotor speed and hence requires damping for stability, the available damping ratio is quite large as shown by the asterisked numbers in Table 2. The reason for their large magnitude is that the relative motion at the oleos is much larger than the hub motion in those modes; this is explained in more detail on page 4. Note also that in these winged cases, not only the fuselage oleos with damping rates of 2500#sec/ft static to 5000 extended, but the wing oleos as well with rates of 5000#sec/ft throughout the stroke are contributory to the available hub damping. The 5000#sec/ft rate throughout the stroke is a value which has been designed for and actually exceeded in tests of the Vertol YHC-1A helicopter.

Reference 3 described two possible wing configurations for the H-21 and H-34 helicopters, a wing size required for a 2400 mile Pacific over-water ferry, and a wing size required for a 1200 mile Atlantic over-water ferry. The analysis above was performed for the 2400 mile wings because of their greater weight, and because the location of the instability ranges were, of course, unknown at the start. The results now obtained indicate that the lighter weight 1200 mile wings would probably have been more critical since they would have raised the fuselage roll mode instability closer to the normal rotor speed range. However, it appears that this configuration will produce no additional difficulties because the available damping will be able to control any instabilities of this light gross weight configura-

REV

Figure 2

MECHANICAL INSTABILITY ANALYSIS OF
VERTOL H-21 HELICOPTER RANGE EXTENSION
USING FLOATING WING FUEL TANKS

Helicopter Gross Weight: 11,100#
Wing Empty Weight (EA.): 1,000#
Wing Full Fuel Weight (EA.): 8,000#
Total Gross Weight
Full Fuel 27,100#

INSTABILITY CENTER VS. AIRCRAFT ATTITUDE

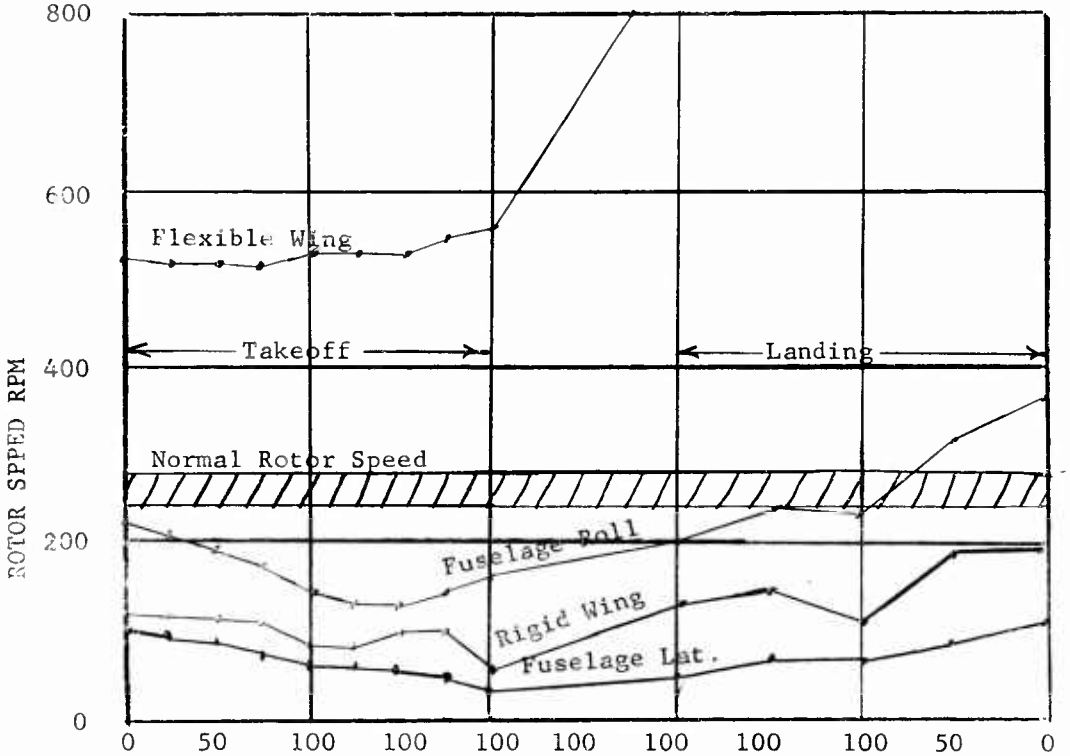

0	50	100	100	100	100	100	100	100	50	0
FUSELAGE PERCENT AIRBORNE										
0	0	0	50	100	100	100	50	0	0	0
WINGS PERCENT AIRBORNE										
0	0	0	40	80	80	80	40	0	0	0
FORWARD SPEED KNOTS										
100	100	100	100	100	50	0	0	0	0	0
PERCENT FUEL IN WINGS										

REV

REV

VERTOL H-21 HELICOPTER

AVAILABLE/REQUIRED DAMPING

WITH WING FUEL TANKS

CASE	#6	#7	#8	#9	#10	#12	#13	#14	#15	#16	#17	#18	#19	#20
Fuselage, Percent Airborne	0	25	50	75	100	100	100	100	100	100	100	100	50	0
Wings, Percent Airborne	0	0	0	0	0	25	50	75	100	100	50	0	0	0
Forward Speed, Knots	0	0	0	0	0	20	40	60	80	80	40	0	0	0
Percent of Fuel in Wings	100	100	100	100	100	100	100	100	100	0	0	0	0	0
MODE														
AVAILABLE/REQUIRED DAMPING: Fuselage, Lateral	16.90	12.55	15.04	32.49	195.21	352,165	422.51	355.80	151.56	24.96	37.06	50.35	17.45	7.94
AVAILABLE/REQUIRED DAMPING: Wings, Rigid	11.19	19.16	49.52	123.27	23.32	55.49	80.00	8,246	6,599	193.45	22.72	96.64	220.96	166.80
AVAILABLE/REQUIRED DAMPING: Fuselage, Roll	4.09	6.75	15.16	38.43	35.54	22.68	10.74	9.75	8,45	8.52	* 222.60	* 5,823	7.92	3.84
AVAILABLE/REQUIRED DAMPING: Wings Flexible	0.74	0.85	1.02	1.20	1.18	1.32	1.33	1.10	1.03	†	†	†	†	†

* Center of Instability in Rotor Speed Bank

† Center of Instability above 480 RPM

tion even more effectively than the heavy gross weight version. In addition, the next higher mode involving wing pin-free bending would also be raised with the 1200 mile wings, but since this is already well above the normal rotor speed, the difference is not significant.

Also note that swiveling of the wing gear wheels is permitted in order to facilitate ground handling, although in normal take-off the gears would be locked. In the above analysis, the gears were conservatively considered to be locked; any lesser degree of restraint, such as swiveling, would improve the stability characteristics by lowering the fuselage rigid wing mode even further below the normal operating speed band.

REV

2. HUP-2 (H-25) Helicopter

Results of the ground instability analysis of the HUP-2 helicopter without wings is presented in Figure 3. As with the previous case, the predominant lateral mode instability is not significant as the region is located far below the normal operating speed range. The center of the roll mode instability region is 325 RPM at 0% airborne, and continues downward as the percentage airborne increases. The rotor operating speed band passes through the unstable region below about 50% airborne, so that damping is required.

Table 3 presents the ratios of available to required damping. The assumption of 5° blade swing in converting the preloaded blade lag damper to a viscous equivalent results in a value of 0.38 (see Section II for the method). Since this is not adequate to control the indicated instability, and since these helicopters have been ground instability tested successfully and have been operational for a considerable period without incident, it is concluded that the 5° assumption is overly conservative. This operational experience is used to obtain a less conservative blade angle. The damping ratio at 0% airborne is made unity, and the blade oscillatory angle necessary to produce this condition is solved for, giving 1.87^{o}.

Ground instability results for the helicopter with wings are presented in Figure 4 using the method of presentation previously described. Again the instability associated with the flexible wing mode appears well above the operating range, and increases to beyond the limit of the plot for the wing empty configuration. The fuselage lateral mode is below the operating speed for all take-off and landing attitude; the rigid wing mode is generally below operating speed except at 0% airborne landing empty. Table 4 reports the available damping ratios based on the 1.87^{o} blade swing calculated above, and gives a value of 3.42 for the rigid wing critical condition, sufficient to control the instability. The roll instability center is in the normal rotor speed band at 0% airborne, but the damping ratio table shows a value of 1.87 so that the condition is acceptable. The roll instability center passes through the rotor band in the flight condition, but the results here are more properly described in the Air Instability Analysis section.

The wing considered in this analysis of the H-25 represents a proposed test configuration, and is not related to a specific ferry range requirement. A description of the wing properties together with the detailed analysis for this aircraft is given in Appendix A-5.

REV

FIGURE 3

VERTOL H-25 HELICOPTER INSTABILITY PLOT

WITHOUT WING TANKS

Gross Weight = 5,389 lbs

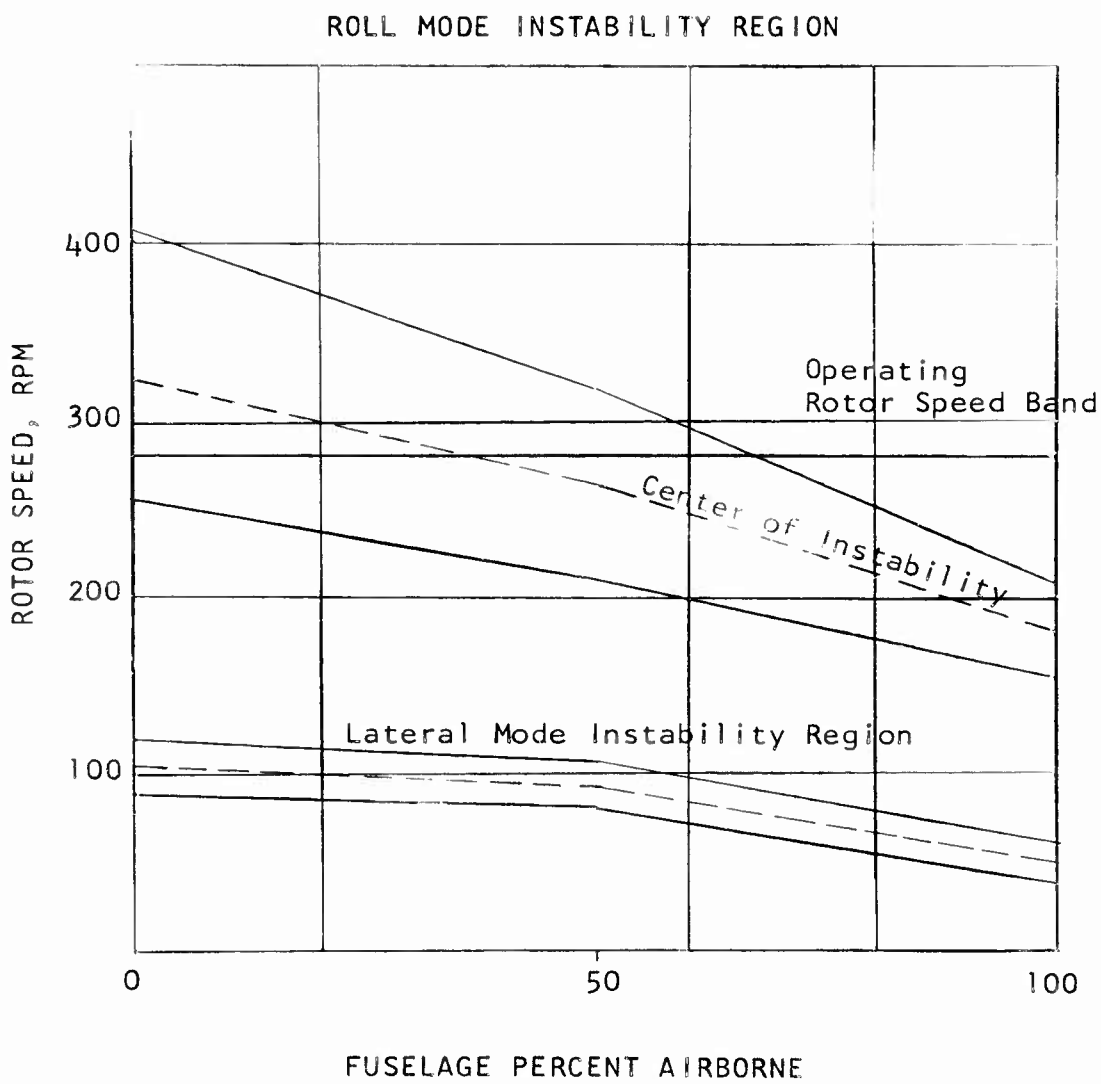

REV

TABLE 3

VERTOL H-25 HELICOPTER

AVAILABLE / REQUIRED DAMPING

		Without Wing Fuel Tanks			
Blade Lag Angle		5.00°		1.87°	
Fuselage Percent Airborne		0	50	0	50
Mode					
Available/Required Damping	Fuselage, Lateral	1.57	10.15	4.20	27.10
	Fuselage, Roll	0.38	1.51	1.00	4.04

REV

Figure 4

MECHANICAL INSTABILITY ANALYSIS

VERTOL H-25 HELICOPTER RANGE EXTENSION

2. FLOATING FUEL TANKS

Helicopter Gross Weight:	5,389 lbs.
Wing Empty Weight (ea.):	375 lbs.
Wing Full Fuel Weight (ea.):	1,500 lbs.
Total Gross Weight Full Fuel :	8,389 lbs.

INSTABILITY CENTER vs. AIRCRAFT ATTITUDE

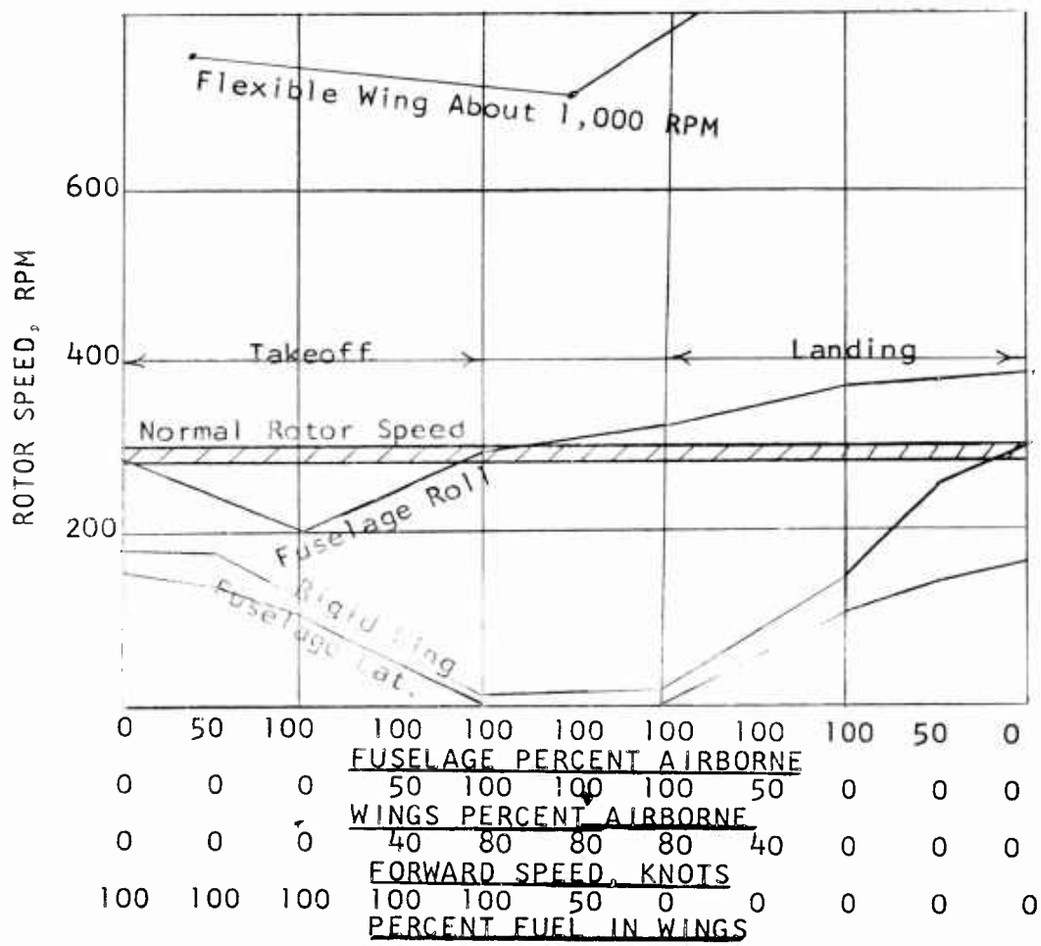

REV

TABLE 4

VERTOL H-25 HELICOPTER

AVAILABLE/REQUIRED DAMPING

WITH WING FUEL TANKS

CASE															
Fuselage, Percent Airborne		0	25	50	75	100	100	100	100	100	100	100	100	50	0
Wings, Percent Airbore		0	0	0	0	0	25	50	75	100	100	50	0	0	0
Forward Speed, Knots		0	0	0	0	0	20	40	60	80	80	40	0	0	0
Percent of Fuel in Wings		100	100	100	100	100	100	100	100	100	0	0	0	0	0
MODE															
AVAILABLE/REQUIRED DAMPING	Fuselage, Lateral	4.60		7.40		1.63				-	-		0	8.09	2.26
	Wings, Rigid	90.6		90.6		2.19				-	-		37.4	* 6.64	* 3.42
	Fuselage, Roll	* 1.87		8.32		86.4				3.50	4.25		186.0	66.6	20.75
	Wings, Flexible	†	†	†	†	†	†	†	†	†	†	†	†	†	†

* Center of Instability in Rotor Speed Band

† Center of Instability above 480 RPM

3. Sikorsky S-58 (H-34)

A similar ground instability analysis was performed for the S-58 helicopter without wings, including lateral and roll motions of the fuselage, and including adjustment of the basic analysis to compensate for the axle landing gear arrangement. Results of this analysis are presented in Figure 5. As noted previously, the unstable region related to the lateral frequency is of little significance as it is located well below the normal rotor speed. The center of instability related to the roll frequency is at 340 RPM for 0% airborne and drops with percent airborne until it passes through the rotor speed band at about 80% airborne. Note again that the conservative non-bottoming assumption has been made for the oleo behavior at fully extended as described under the H-21 section. The alternate assumption of a rigid strut would raise the high percent airborne cases up out of the rotor band.

Table 5 gives the available to required damping ratios based on both 5° blade swing, and the 1.87° swing found necessary for a stable prediction of the HUP-2. At low percents airborne, the damping ratio for either blade swing is quite small because of the small available oleo strut damping (see Appendix A-6). However, the instability range is above the operating rotor band, and no damping is theoretically required. At 75% airborne, damping is required because the instability region dips into the rotor speed, but the damping ratio is still less than unity, meaning that insufficient damping exists for stability control according to the Coleman theory used here, unless blade lag motion is restricted to much less than 1.87° swing.

Figure 6 presents the results of the ground instability calculations for the S-58 helicopter with floating wings. For 0% airborne, the flexible wing mode instability is above the operating speed range, and the fuselage lateral, rigid wing, and fuselage roll instabilities appear below the normal rotor speed band. However, the center of the fuselage roll instability is close to the normal rotor speed, so that its instability region would intersect the rotor band. Decreasing the wing fuel to 0% raises the flexible wing mode instability beyond the limits of the plot; the other mode instabilities are also increased such that the fuselage roll and rigid wing modes are located near or in the rotor band during landing.

Table 6 presents the available to required damping ratios for the wing tank configurations based on the more conservative 5° blade swing assumption. This approach is possible with the wings on, because the wing landing gear oleos will have a damping capacity of better than 5000 lb.sec/ft., sufficient to control the stability of the helicopter-wing configuration. Table 6 shows that all the damping ratios for the modes which pass through the rotor band, that is fuselage roll and rigid wing, are greater than unity thus providing sufficient damping in all cases. The only values less than unity are for the wing flexible mode, and these are not significant because the instability center is so far above the rotor operating speed.

REV

FIGURE 5

MECHANICAL INSTABILITY ANALYSIS OF
SIKORSKY S-58 HELICOPTER RANGE EXTENSION
WITHOUT WING FUEL TANKS
Gross Weight: 9,300 lbs.

INSTABILITY REGION vs. AIRCRAFT ATTITUDE

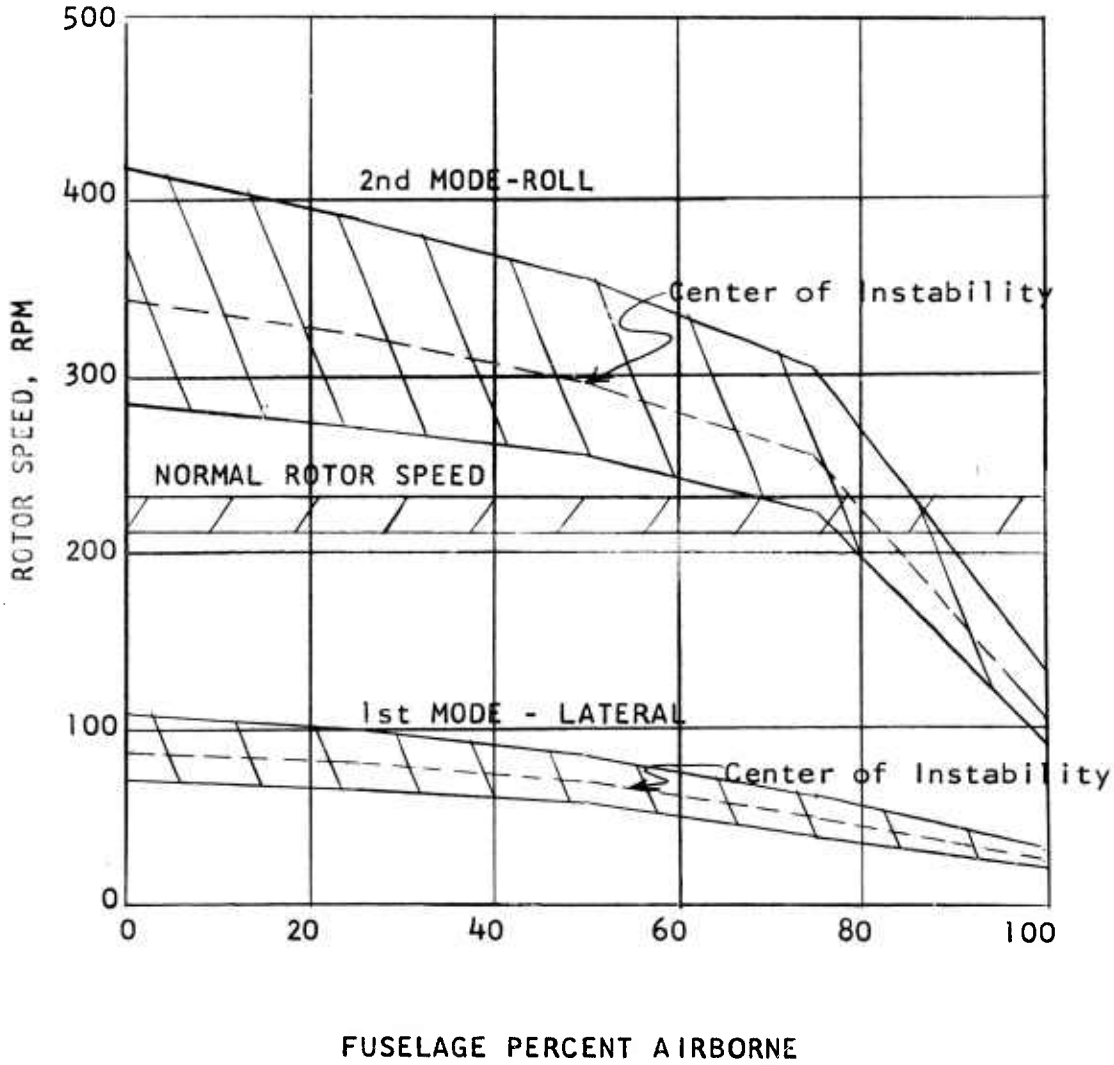

REV

TABLE 5

SIKORSKY S-58 HELICOPTER

AVAILABLE/REQUIRED DAMPING

		Without Wing Fuel Tanks							
Blade Lag Angle		5.00°				1.87°			
Fuselage Percent Airborne		0	25	50	75	0	25	50	75
Mode									
Available/Required Damping	Fuselage, Lateral	0.03	0.06	0.21	1.47	0.08	0.15	0.57	3.86
	Fuselage, Roll	0.01	0.01	0.03	0.10	0.02	0.03	0.08	0.26

REV

Figure 6

MECHANICAL INSTABILITY ANALYSIS OF
SIKORSKY S-58 HELICOPTER RANGE EXTENSION
USING FLOATING WING FUEL TANKS

Helicopter Gross Weight:	9,300 lbs.
Wing Empty Weight (ea.):	1,000 lbs.
Wing Full Fuel Weight (ea.):	8,000 lbs.
Total Gross Weight Full Fuel	: 25,300 lbs.

INSTABILITY CENTER vs. AIRCRAFT ATTITUDE

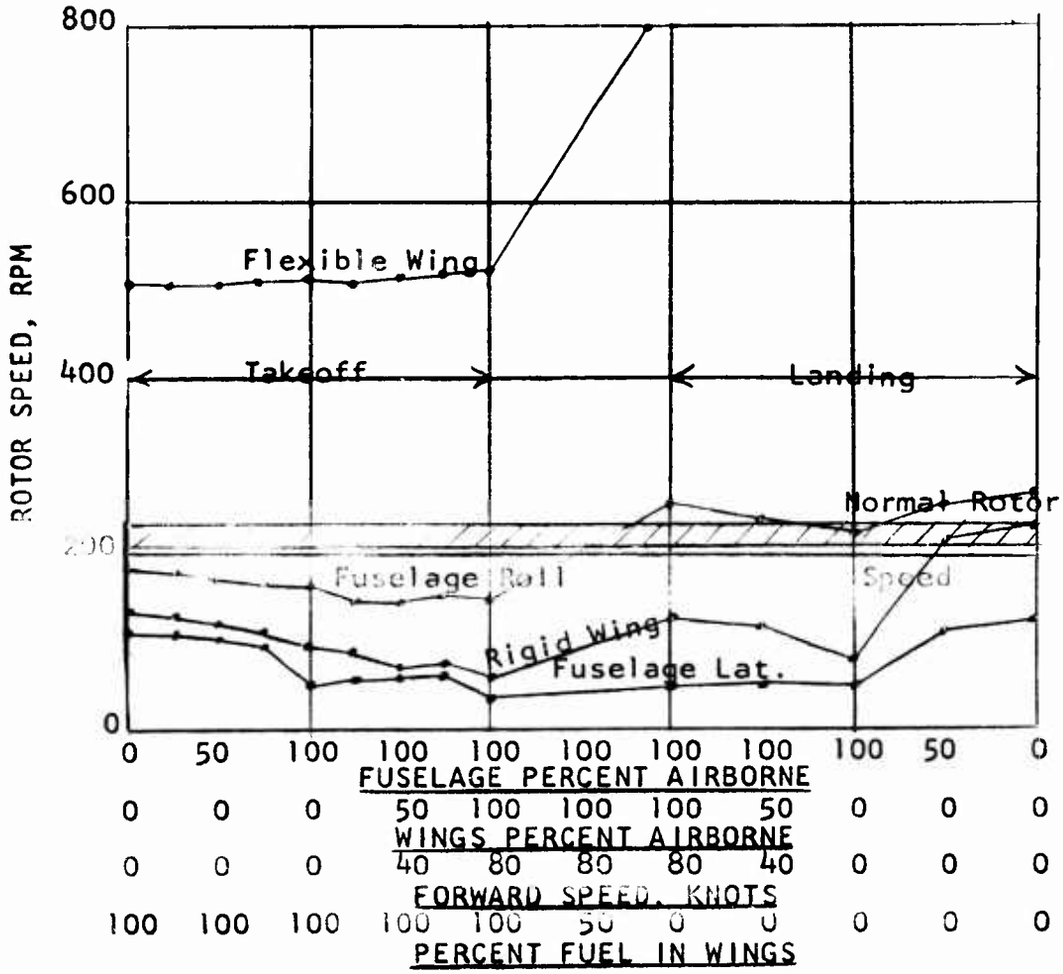

REV

REV

SIKORSKY S-58 HELICOPTER

AVAILABLE/REQUIRED DAMPING

WITH WING FUEL TANKS

CASE		#16	#17	#18	#19	#20	#2	#3	#4	#5	#6	#7	#8	#9	#10
Fuselage, Percent Airborne		0	25	50	75	100	100	100	100	100	100	100	100	50	0
Wings, Percent Airborne		0	0	0	0	0	25	50	75	100	100	50	0	0	0
Forward Speed, Knots		0	0	0	0	0	20	40	60	80	80	40	0		0
Percent of Fuel in Wings		100	100	100	100	100	100	100	100	100	0	0	0	0	0
MODE															
AVAILABLE/REQUIRED DAMPING	Fuselage, Lateral	7.11	6.64	5.73	4.48	3.18	4.95	246.99	215.60	44.95	8.29	6.08	3.91	7.29	7.54
	Wings, Rigid	39.92	14.18	6.32	5.95	5.79	28.58	24.84	269.55	1316.44	37.35	4.84	1.03	* 8.28	* 222.91
	Fuselage, Roll	2.01	2.75	4.02	6.14	7.51	7.39	4.70	3.69	1.07	* 1.92	* 88.98	337.15	24.18	5.29
	Wings, Flexible	0.03	0.03	0.04	0.04	0.05	0.06	0.05	0.03	0.01	†	†	†	†	†

*Center of Instability in Rotor Speed Band

† Center of Instability above 480 RPM

B. Air Instability Analysis

1. H-21 Helicopter

The results of the air instability analysis for the H-21 are summarized in Table 7. "S" indicates a stable response to a lateral step input, "U" indicates an unstable response and "N" indicates a response with neutral stability. The three conditions considered are (1) Helicopter Without Wings, (2) With Wings 0% Fuel, and (3) With Wings 100% Fuel. Two columns labeled respectively "No Flap" and "Flap" appear under each of the three conditions, and imply a solution where in the former the blade lag equations but not the blade flap equations are used, and in the latter where both the flap and lag equations are used. With wings on, additional subcategory columns appear designating (1) solutions with only the normal aerodynamic damping of the wings labeled "No Mech. Wing Damper" and (2) solutions with added mechanical damping at the wing hinge equal in magnitude to a second aerodynamic damper. In some instances, there are cases where the normal wing aerodynamic spring, "1.0 K", has been reduced in value to 0.5 K, 0.75 K or 0.80 K. Row headings on the left give the rotor speed in RPM and radians/second and describe cases with and without blade lag dampers.

Helicopter Without Wings

The normal helicopter Without Wings and No Flap (blade lag only) is shown in Table 7 to be stable throughout the rotor speed variations. It is clear from this that no reference frequencies, that is, natural frequencies of the helicopter body, exist in this configuration to induce instabilities. When the Flap equations are employed with blade lag, instabilities appear from 150 to 320 RPM for the blades without lag dampers. With the normal lag dampers active, these instabilities disappear.

This indication of an inflight instability, independent of mechanical kinematic coupling, but dependent on Coriolis acceleration from flap to lag, is new and so far as is known, has not been predicted analytically before. While no specific test data is known for this condition, it is not in disagreement with normal flight characteristics, since it is predicted that the blade lag dampers are sufficient to prevent the instability. The lag damping requirement was investigated in more detail, and it was found that a damper with an equivalent viscous rate 40% of the normal rate was sufficient to prevent the instability.

The validity of the aerodynamic representation for the flapping rotor was affirmed by another check which considered only the helicopter coordinates y and and the blade flapping equations. Under a lateral step input, a long period oscillation of about 9 seconds appears whose amplitude grows slowly. This is the same roll oscillation of the helicopter which is predicted by lateral stability equations using the conventional stability derivative approach. The 9.5 second period run is illustrated in Figure 7.

REV

TABLE 7

REV

Rotor Speed RPM	Rotor Speed Rad/Sec.		Without Wings		0% Fuel in Wings										100% Fuel in Wings									
					No Flap					Flap					No Flap					Flap				
					Mech. Wing Damper					Mech. Wing Damper					Mech. Wing Damper					Mech. Wing Damper				
			No Flap	Flap	Without				With	Without				With	Without				With	Without				With
					.5K	.75K	.8K	K		.5K	.75K	.8K	K		.5K	.75K	.8K	K		.5K	.75K	.8K	K	
50	5.236	No Blade Damper	S	S				S					S					S					S	
		Blade Damper	S	S																				
100	10.47	No Blade Damper	S	S				S					N					S					S	
		Blade Damper	S	S									S											
150	15.79	No Blade Damper	S	U				S					N					U	S	U			U	S
		Blade Damper	S	S									G		S			U	S	S			U	S
200	20.94	No Blade Damper	S					U	S				U	S				U	S	U			U	S
		Blade Damper	S					U	S				U	S				U	S	S			U	S
240	24.13	No Blade Damper	S	U				U	S				U	S				S	S				U	
		Blade Damper	S	S				U	S				U	S				S	S				S	S
248 Normal	27.02	No Blade Damper	S	U	S	U		U	S	U	U		U	S				S	S				U	
		Blade Damper	S	S	S	S	U	U	S	S	S	U	U	S				S	S				S	S
280	29.32	No Blade Damper	S	U	S			U	U	U			U	U				S	S				U	
		Blade Damper	S	S				U	S	S			U	S				S	S				S	S
520	33.51	No Blade Damper	S	U	S			U	S	U			U	U				S	S				U	
		Blade Damper	S	S				U	S	U			U	S				S	S				S	S

FORM 1118C (3/60)

Figure 7

H-21 RANGE EXTENSION
AIR INSTABILITY ANALYSIS
(LAG EQUATIONS OMITTED)

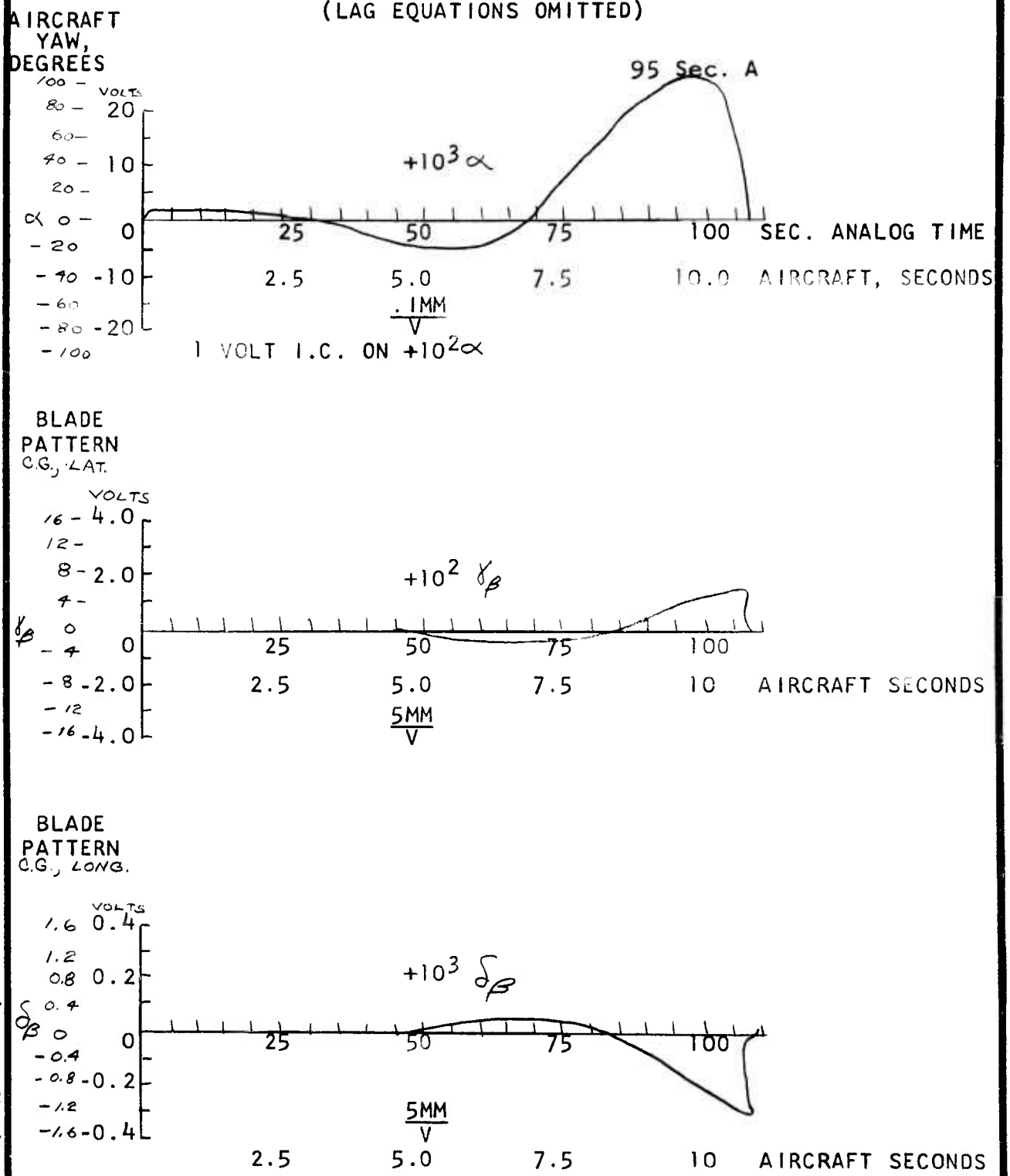

TIME SCALE: 10 SEC. ANALOG = 1 SEC. REAL

REV

Helicopter With Wings, 0% Fuel

a. No Flap (Blade Lag Only)

The helicopter with 0% fuel in its wings, and No Flap (blade lag only) in Table 7 has an instability between 200 and 320 RPM, the latter being the maximum rotor speed considered in this analysis. This instability appears with either no blade damper or the normal blade damper. It can be eliminated by reducing the wing aerodynamic spring to 0.75 of its normal value or by providing a damper at the wing hinge as shown in the "Mach. Wing Damper" column in Table 7. This instability closely resembles ground instability since it results from a reference natural frequency; in ground cases, this reference frequency is produced by the helicopter on its tire and also springs; in the air, this reference frequency is produced by the wing aerodynamic spring.

b. Flap (Includes Blade Flap and Lag Motions)

Results of the more complete anslysis considering both flap and lag motions appear in the next set of columns in Table 7. These results differ somewhat from those with lag motion above, and are presumably more representative of the actual situation. With no mechanical wing damper and with no blade dampers, the helicopter is neutrally stable at 100 and 150 RPM, and unstable from 200 RPM upward. With lag dampers, the neutral points become stable, but the unstable points from 200 RPM upward are unchanged. Since this instability exists at normal rotor speed, it is critical and must be eliminated.

One means for eliminating the instability is shown in Table 7 to be a reduction of the wing aerodynamic spring to 0.75 of its normal value. Another approach, the mechanical wing hinge damper with a damping rate equal to the aerodynamic wing damping, is also shown to eliminate the instability. Additional analog runs were made at 258 RPM normal rotor speed to find the minimum wing damper actually necessary for stability, and it was found to be 18% of the wing aerodynamic rate.

Since this last means, a small damping increase, was found to be reasonable, the aerodynamic analyses were reviewed. The aerodynamic damper analysis, Pages B-17 and 18, and the aerodynamic spring analysis, Page B-16, were based on Theodorsen quasi-static aerodynamics, Reference 10, using only the thrust term so that the resulting value was quite conservative. These analyses were rederived on Pages B-19 through 21, using the complete quasi-static thrust and moment expressions from Theodorsen. The new results show a 15% increase in wing aerodynamic damping, and a 20% decrease in the wing aerodynamic spring. These two refinements are sufficient to make the critical condition stable, so that the aircraft with 0% fuel wings is predicted to be stable, although the margin of available over required damping is small. It should be noted that none of the basic calculations presented in this report include the modified effects of this increase in damping and reduction in aerodynamic wing spring.

REV

In view of the marginal damping for this condition, experimental wing damping characteristics obtained in the wind tunnel model tests were compared with calculated values, taking account of scaling effect. Details of this scaling are given in Appendix B-4 for the HUP-2 configuration which was tested in the tunnel. It was found that the test wing aerodynamic damping exceeds the calculated by about 50%, therefore adequate damping should be available to eliminate the instability in this condition.

Helicopter With Wings, 100% Fuel

The four columns on the right of Table 7 record the results for the 100% fuel case. With No Flap, No Mechanical Wing Damper and No Blade Damper, the unstable band appears between 150 and 200 RPM. This band is lower and narrower than for 0% Fuel, which is attributable to the lower roll natural frequency resulting from the large fuel mass. The presence of the blade dampers does not remove this instability. Since the instability is below 240 RPM normal operating speed, it is considered acceptable. Nevertheless, it is shown for information that a 50% reduction in the wing spring would lower the instability below 150 RPM, and that a mechanical wing hinge damper would eliminate the instability altogether.

The complete case with flap and leg motion shows that without lag dampers, the aircraft is unstable from 150RPM upward. With the normal lag dampers, the aircraft is stable from 240 RPM upward. Since this includes the normal rotor speed of 258 RPM, the 100% fuel case is predicted to be operationally stable.

As a matter of interest, the instability appearing below 240 RPM is due to the wing fuselage coupled natural frequency on the wing aerodynamic spring; it can be placed at a lower rotor speed by reducing the wing aerodynamic spring, or providing a hinge damper. The less conservative spring and damping analysis reported above for the 0% fuel case would also be effectual here, but was not carried out since this case was not critical at operating rotor speed.

Note in general from the previous discussion that there are apparently two types of instability appearing, both manifested as disturbances in the blade lag pattern as in ground instability. The first is due to an aircraft reference natural frequency about 30% below the normal rotor speed which places an instability range in the operating speed just as in ground instability; the second instability is induced by blade flapping causing blade lag depatterning. The first can be remedied by lowering the instability range below the normal rotor speed and/or providing wing hinge damping, the second is controlled by blade lag dampers which are already on the helicopter to deal with ground instability.

REV

Effect of the Wing Hinge Angle on the Aerodynamic Spring

One means generally considered whenever a change in wing aerodynamic spring is sought, is that of changing the wing hinge angle from the 45° that has been selected as optimum from the standpoint of flight controllability. While operational stability has been obtained above by other means, it will be shown here for record purposes that the small hinge variations are not very effective in reducing the aerodynamic spring. The simplified aerodynamic spring expression is $K = 1/4 \rho a_\infty C_o V^2 L^2 \cos\gamma_o \sin\gamma_o$. Considering only the portion dependent on the hinge angle, the expression reduces to $K_{\alpha W} = K \cos\gamma_o \sin\gamma_o$ or $K_{\alpha W} = \frac{K}{2} \sin\gamma_o$. The variation of aerodynamic spring, $K_{\alpha W}$ from the present value for $\gamma_o = 45°$ is shown in the curve below.

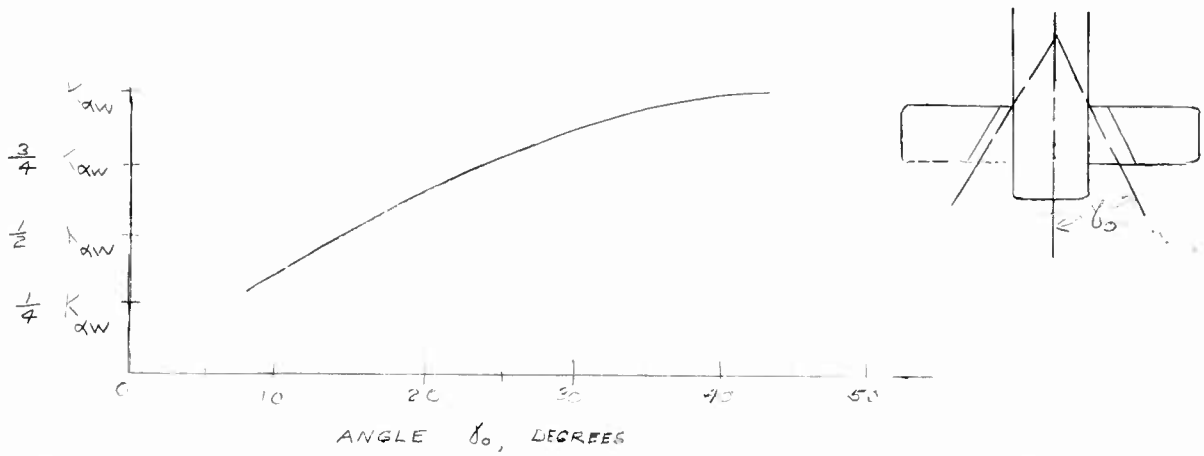

The curve above indicates that varying the hinge angle 10° or so, which would be tolerable from a performance standpoint, would produce only a negligible change in the aerodynamic wing spring.

Test Procedure

While analysis indicates the aircraft to be free from instability on the ground or in the air, reasonable prudence suggests that a test procedure be carried out prior to the first flights. This should consist of ground resonance tests, with the rotors turning, with the aircraft in a quick acting snubbing rig, as for conventional new model helicopters prior to first rev-up in a free condition. Because of the difficulty of recovering from ground resonance during a running takeoff, tests should also be run in the rig using a spring, characteristic of the wing aerodynamic spring, to support the wing and thus safely simulate partially airborne conditions encountered during actual takeoff. This could be followed by tests at forward speed on a long runway with the wings fully loaded, the most conservative case. The wing would become airborne at about 80 knots, and if any sign of instability were noted, the wings could be dropped back on their wheels which would change the conditions and eliminate the oscillation. Finally, the test could be repeated with the more critical 0% fuel wings until the whole operational range had been covered, and then full scale flight testing could begin with assurance.

It is further recommended that provision be made for the installation of small wing flap hinge dampers on the prototype since damping is predicted, in some cases, to be marginal.

REV

2. H-25 Helicopter

Table 8 presents the air instability results for the H-25 in three configurations, Without Wings, With Wings 0% Fuel, and With Wings 100% Fuel. Cases were run at the normal rotor speed 290 RPM, and a 50 RPM increment above and below this speed, 240 and 340 RPM.

Helicopter Without Wings

Without wings and without the flap degree of freedom, the helicopter is stable at all rotor speeds. This is because no reference frequency exists to induce the rotor lag type of instability. With flap motion of the blades permitted, an instability appears at 240 and 290 RPM which is removed when the blade dampers are active. At 340 RPM, the flap instability persists even with the blade dampers. Since these helicopters are operational, and since they have been operated at high autorotative speed without incident, it is apparent that this flap instability is either slightly higher than predicted, or that the available damping is higher than that calculated. As noted in the Ground Instability discussion, the choice of blade oscillatory amplitude in important in converting the preloaded hydraulic damper to a viscous equivalent. With a blade angle somewhat less than the conservative 5° used here, a stable condition would be obtained.

Helicopter With 0% Fuel Wings

With empty wings and no flap, the helicopter-wing combination is unstable at the three rotor speeds considered. The addition of blade dampers and a mechanical hinge damper with a rate equal to half that of the aerodynamic wing damping will remove the predicted instability. With the flap degree of freedom permitted, the results are not changed. As noted under the H-21 results, the wind tunnel data for the H-25 gave a damping ratio of 0.24 compared to a calculated magnitude of 0.16. This means that with this additional damping, the helicopter wing combination would be stable without additional damping.

Helicopter With 100% Fuel Wings

Table 8 shows the results with 100% fuel to be identical to those with 0% fuel. The additional damping indicated by the wind tunnel tests will therefore again be sufficient to make the aircraft stable.

REV

REV

INSTABILITY ANALYSIS

ROTOR SPEED			WITHOUT WINGS		0% FUEL IN WINGS						100% FUEL IN WINGS					
					No Flap			Flap			No Flap			Flap		
RPM	Rad./Sec.		No Flap	Flap	No Mech. Wing Damper	Mech. Wing Damper .5N	Mech. Wing Damper N	No Mech. Wing Damper	Mech. Wing Damper .5N	Mech. Wing Damper N	No Mech. Wing Damper	Mech. Wing Damper .5N	Mech. Wing Damper N	No Mech. Wing Damper	Mech. Wing Damper .5N	Mech. Wing Damper N
240	25.12	No Blade Damper	S	U	U		U	U		U	U		U	U		S
		Blade Damper	S	S	U	S	S	U	S	S	U	S	S	U	S	S
290	30.35	No Blade Damper	S	U	U		U	U		U	U		U	U		U
		Blade Damper	S	S	U	S	S	U	S	S	U	S	S	U	S	S
NORMAL																
340	35.59	No Blade Damper	S	U	U		U	U		U	U		U	U		U
		Blade Damper	S	U	U	S	S	U	S	S	U	S	S	U	S	S

3. H-34 Helicopter

Table 9 summarizes the air instability analysis for the H-34 in three configurations.

Helicopter Without Wings

As with the previous helicopters, calculated without the flap degree of freedom, the absence of a reference roll natural frequency prohibits the appearance of an instability. With the blade flap degrees of freedom included, an instability appears without lag dampers at 170 and 220 RPM which is removed when the dampers are reintroduced. At the highest rotor speed considered 270 RPM, 50 RPM above the normal, stability is more difficult to achieve. With a viscous equivalent rate 1.5 times the normal, stability is attained. The normal viscous damping rate was obtained here as in the previous aircraft discussed, by assuming a 5° blade swing and converting the damper preload into a viscous damper capable of dissipating the same energy. As in the HUP case, the selection of a smaller blade angle of about 3.33 degrees would have produced stability.

Helicopter With 0% Fuel Wings

With empty wings a lag type of instability exists for the three rotor speeds considered without damping and both with and without the flap degrees of freedom. The blade lag dampers above are in no case sufficient to remove the instability. The use of a mechanical wing hinge damper equal in magnitude to a second aerodynamic damper, along with the blade dampers, does make the aircraft stable. As with the HUP-2, the use of wind tunnel test damping ratios would mean an increase in wing aerodynamic damping, and a decrease in the required size of the wing hinge damper.

Helicopter With 100% Fuel Wings

With fully loaded wings, the lag instability is reduced to 220 RPM and below in the No Flap case, and can be controlled at normal 220 RPM by the standard blade lag dampers. With the flapping degrees of freedom added, the situation is similar except that at 270 RPM a flap induced instability appears which requires the combination of normal blade damper and 3/4 normal wing hinge damper to remove.

REV

REV

INSTABILITY ANALYSIS

ROTOR SPEED			WITHOUT WINGS		0% FUEL IN WINGS				100% FUEL IN WINGS				
					No Flap		Flap		No Flap		Flap		
RPM	Rad./Sec.		No Flap	Flap	No Mech. Wing Damper	Mech. Wing Damper	No Mech. Wing Damper	Mech. Wing Damper	No Mech. Wing Damper	Mech. Wing Damper	No Mech. Wing Damper	Mech Wing Damper N	Mech Wing Damper 3/4N
170	17.79	No Blade Damper	S	S	U	U	U	U	U	S	U	S	
		Blade Damper	S	S	U	S	U	S	U	S	S	S	
220	23.03	No Blade Damper	S	U	U	U	U	U	U	U	U	U	
		Blade Damper	S	S	U	S	U	S	S	S	S	S	
270	28.27	No Blade Damper	S	U	U	U	U	U	S	S	U	U	
		Blade Damper	S 1.25 1.5	U U	U U	S	U U	U S	S	S	U	S	S

IV. CONCLUSIONS

The helicopter range extension system consisting of hinged wing fuel tanks has been investigated for acceptable characteristics in ground and air mechanical stability.

Ground instability characteristics of the H-21, HUP-2(H-25), and H-34 with floating wing fuel tanks were investigated through a simulated takeoff with full tanks, and a landing with empty tanks. Four modes were calculated representing dominant motions respectively in aircraft; lateral motion, wing rigid body flap, aircraft roll motion, and wing first pin-free bending. The aircraft lateral, wing flap and aircraft roll instability ranges were generally under the normal rotor speed excitation band, and the wing first bending instability range was well above it. The aircraft roll instability range and the rigid wing flap instability range were nearest the rotor speed excitation, and entered it during some portion of the takeoff or landing sequence. With the wing oleos assumed to have the characteristics of the VERTOL YHC-1A main gears, however, sufficient oleo-blade lag damping was always present to prevent the growth of the instability.

Two types of mechanical instability were shown to be possible in the air; one due to reference natural frequencies of the fuselage-wing system on the wing aerodynamic spring, similar in concept to the ground instability case with its ground spring reference frequency, and the second due to rotor blade flapping causing blade depatterning through Coriolis acceleration between flap and lag. The second type was shown to occur in helicopters without floating wings as well, but to be controlled by the normal blade lag dampers. The winged configuration of the three helicopters were shown to be stable in the normal operating rotor speed range, but the tanks empty condition was nearest to being critical.

To insure safety in the prototype flight test vehicle, it is recommended that:

1. The wing natural frequency pin-free be above 1.1 ω.
2. Provision be made for wing flap dampers with a rate of about 10,000 ft.lb.sec.
3. Wing flap dampers be installed on the prototype vehicle.
4. A build up ground resonance and air resonance test program be conducted prior to and in conjunction with initial flight test operations.
5. Additional tests aimed at eliminating the wing flap dampers be carried out.

REV

V. REFERENCES

1. Army Contract DA-44-177-TC-550, "Wind Tunnel Test and Further Study of the Floating Wing Fuel Tanks for Helicopter Range Extension".

2. Transportation Research and Engineering Command, Project No. 9-38-01-000 ST801, Contract DA44-177-TC-478, 1958.

3. C. B. Fay, "Feasibility Study of Helicopter Range Extension using Floating Wing Fuel Tanks", Vertol Aircraft Corp. Report R-156, September 28, 1958, ASTIA No. AD203262.

4. "Proposal for Wind Tunnel Test and Further Study of the Floating Wing Fuel Tanks for Helicopter Range Extension", Vertol Aircraft Report PR-275, March 1959.

5. R. P. Coleman, "Theory of Self-Excited Mechanical Oscillation of Hinged Rotor Blades", N.A.C.A. Advanced Restricted Report 3G29, 1943.

6. R. P. Coleman, A. M. Feingold, "Theory of Self-Excited Mechanical Oscillations of Helicopter Rotors with Hinged Blades" NACA TN3844, February 1957.

7. T. Warming, "Some New Conclusions about Helicopter Mechanical Instability", Journal of the American Helicopter Society, July 56.

8. W. B. Gevarter, "Physical Interpretation of Helicopter Chordwise Vibration", Proceedings of the Thirteenth Annual Forum of the American Helicopter Society, May 1957.

9. R. G. Loewy, R. T. Yntema, "Some Aeroelastic Problems of Tilt-Wing VTOL Aircraft", Journal of the American Helicopter Society, January 1958.

10. T. Theodorsen, "General Theory of Aerodynamic Instability and the Mechanism of Flutter", NACA Report 496, April 1935.

11. R. G. Loewy, R. T. Yntema, R. Gabel, "Effect of Certain Mass and Stiffness Changes on Helicopter Rotor Blade Dynamics, Part 1 - Free Vibration Mode Study, WADC Technical Report 58-166 Part 1, ASTIA Document No. AD-151153, January 1959.

12. B. Arrow, "Theoretical Analysis of HUP-2 Ground Resonance", Vertol Report 18-D-05, October 1951.

13. W. Borsari, "Actual Weight and Balance Report, Detail, Model HUP-2 Helicopter", Vertol Report 18-W-19, July 1954.

14. C. Fay, "Range Extension Wind Tunnel Tests", Vertol Report R-204, June 1960.

REV

APPENDIX A

1. Ground Instability Analysis Pyramid Gear

REV

HELICOPTER RANGE EXTENSION
USING FLOATING WING FUEL TANKS

DEGREES OF FREEDOM

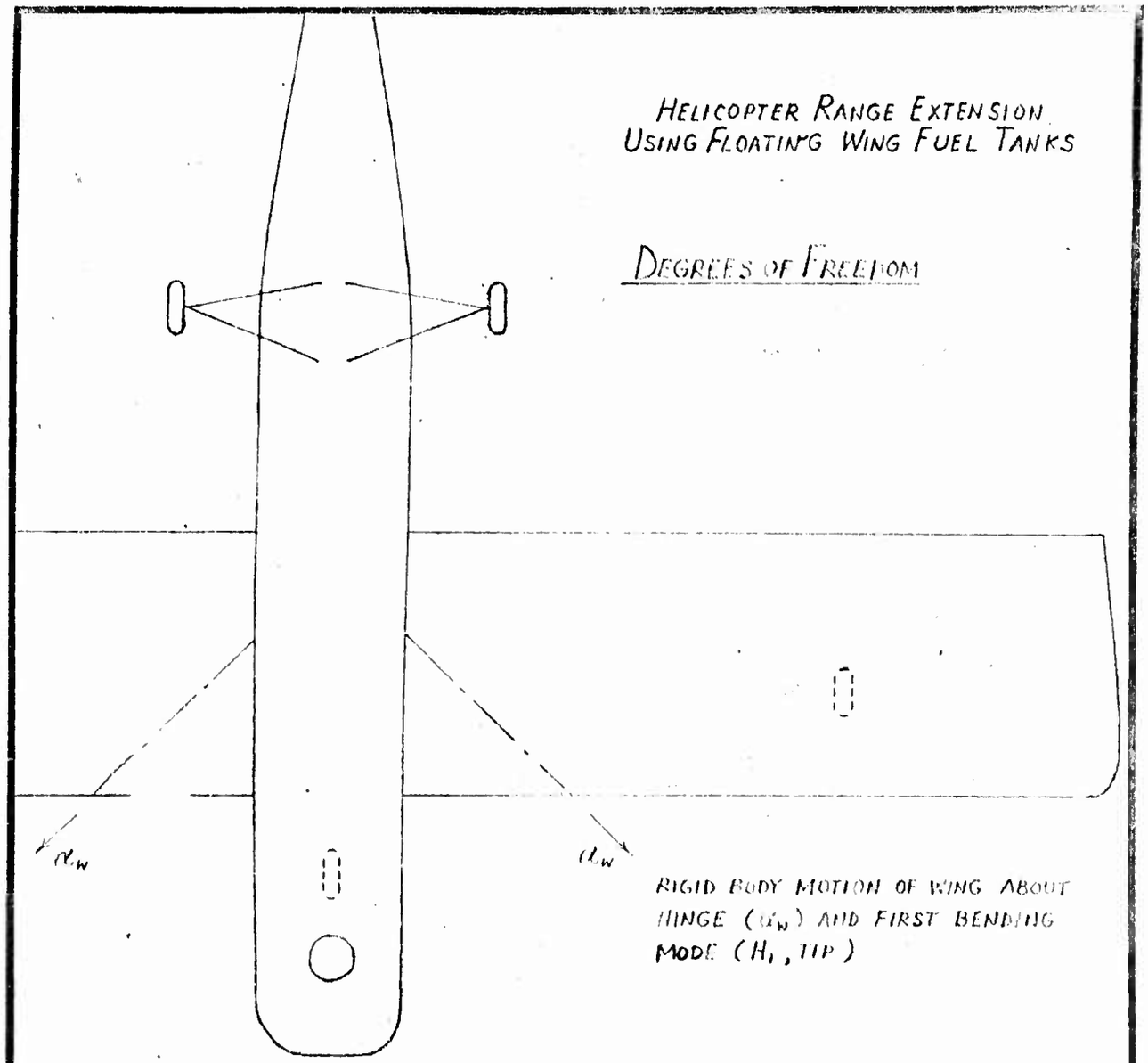

RIGID BODY MOTION OF WING ABOUT HINGE (α_W) AND FIRST BENDING MODE (H_1, TIP)

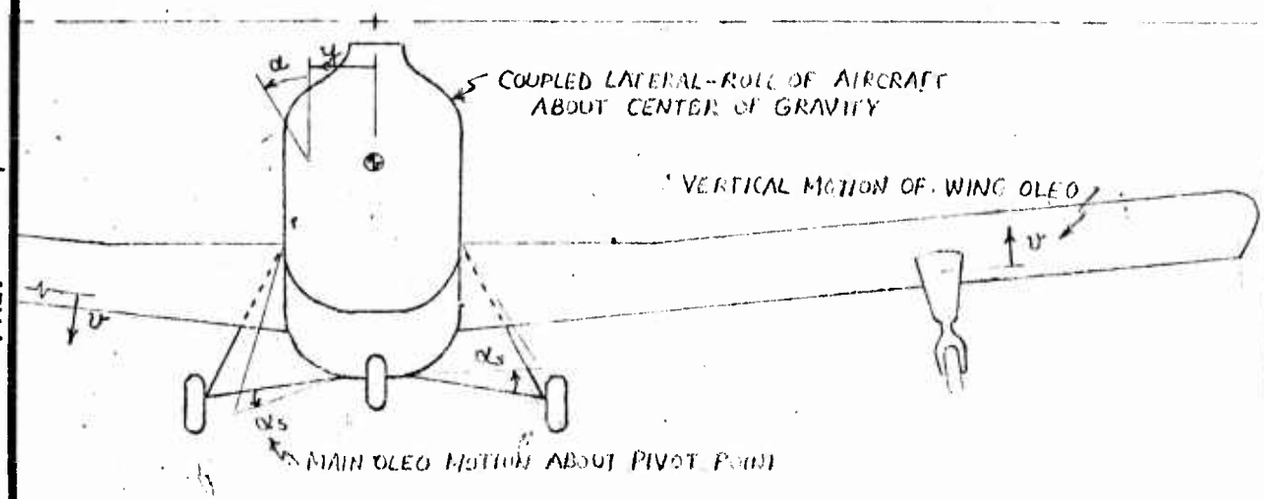

REV

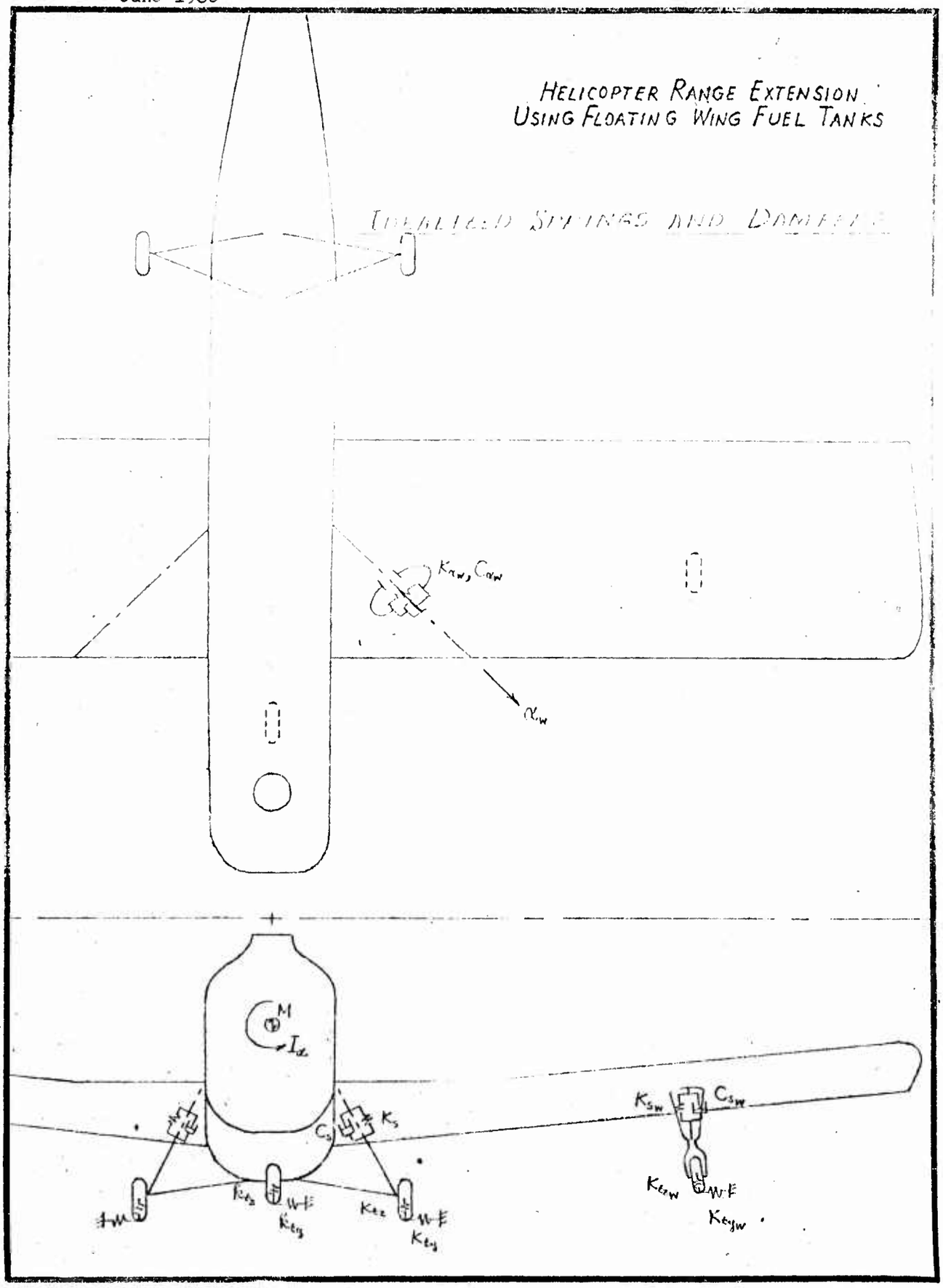
HELICOPTER RANGE EXTENSION
USING FLOATING WING FUEL TANKS
INDICATED SPRINGS AND DAMPERS
$K_{\alpha_w}, C_{\alpha_w}$
α_w
M
I_α
K_s
C_s
K_{s_w}
C_{s_w}
K_{t_z}
K_{t_y}
K_{t_z}
K_{t_y}
$K_{t_{zw}}$
$K_{t_{yw}}$

REV

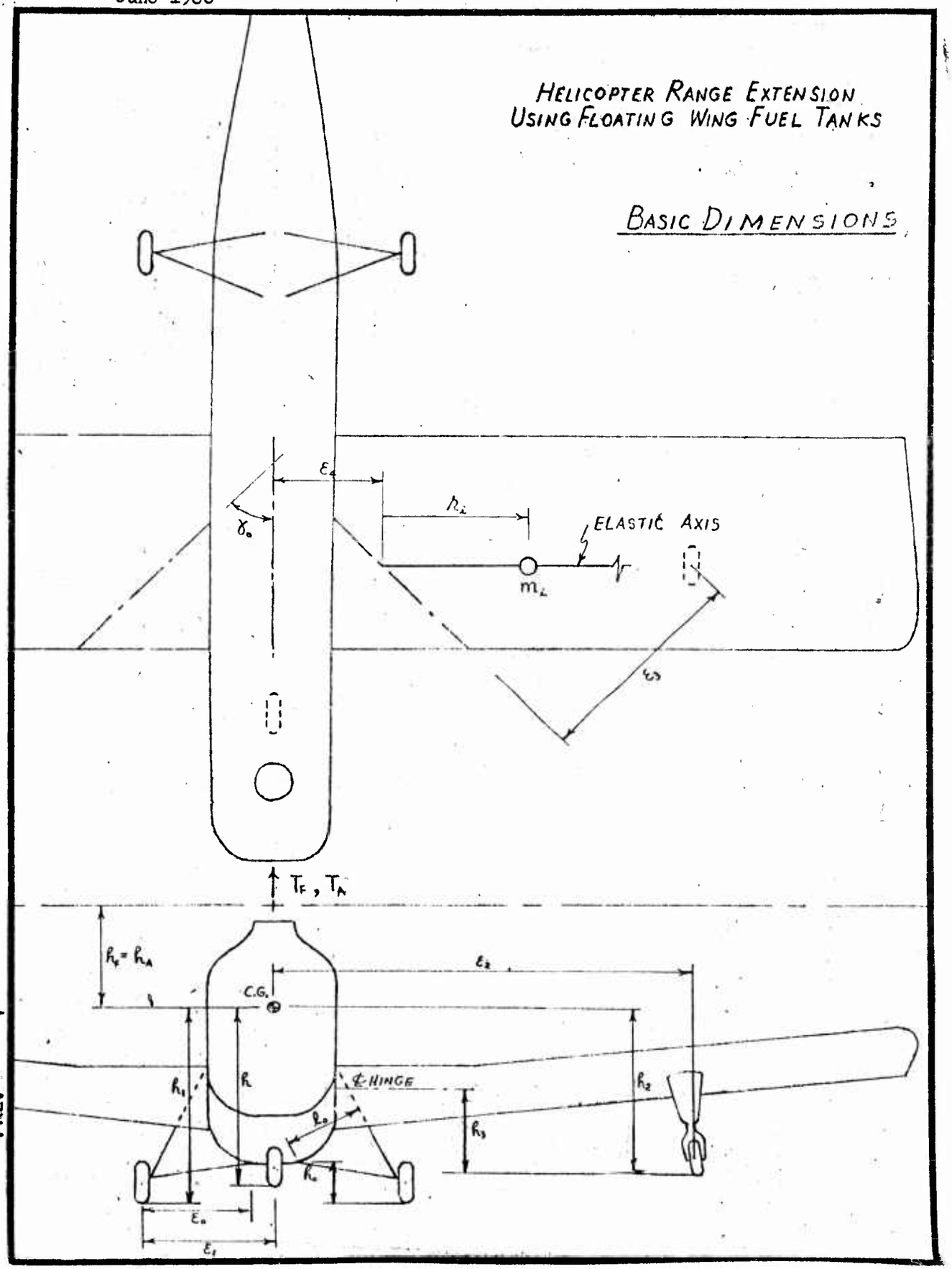
HELICOPTER RANGE EXTENSION
USING FLOATING WING FUEL TANKS
BASIC DIMENSIONS
ELASTIC AXIS
C.G.
℄ HINGE
REV

SYMBOLS

M Mass of aircraft including wings and blades

I_α Roll inertia of aircraft about CG including wings and blades concentrated at hub

K_s Spring rate of main gear oleo

C_s Damping rate of main gear oleo

K_{ty} Lateral spring rate of main gear tire

K_{tz} Vertical spring rate of main gear tire

k_{ty} Lateral spring rate of nose gear tire

k_{tz} Vertical spring rate of nose gear tire

l_0 Distance from main gear pivot point to ℄ oleo

h Distance from aircraft CG to nose tire axle, normal to rotor plane

h_0 Distance from main gear pivot point to tire axle, normal to rotor plane

h_1 Distance from aircraft CG to main tire axle, normal to rotor plane

ε_0 Lateral distance from main gear pivot point to ℄ tire

ε_1 Lateral distance from ℄ main tire to ℄ aircraft

h_F Distance from aircraft CG to forward rotor plane

h_A Distance from aircraft CG to aft rotor plane

T_F Constant thrust of forward rotor

T_A Constant thrust of aft rotor

K_{sw} Spring rate of wing gear oleo

C_{sw} Damping rate of wing gear oleo

K_{tyw} Lateral spring rate of wing tire

K_{tzw} Vertical spring rate of wing tire

$K_{\alpha w}$ Aerodynamic spring of wing

$C_{\alpha w}$ Mechanical wing damper at range

REV

h_2 Distance from aircraft CG to wing tire axle, normal to rotor plane

h_3 Distance from ℄ wing hinge to wing tire axle, normal to rotor plane

ε_2 Lateral distance from aircraft CG to ℄ wing tire

ε_3 Distance from wing hinge to center of wing tire, parallel to rotor plane

SYMBOLS (Continued)

ε_4 Lateral distance from ℄ aircraft to ℄ wing hinge

γ_0 Angle between ℄ aircraft and ℄ wing hinge

V Forward speed of aircraft

Ω Normal rotor speed

ω_1 First bending natural frequency of wing

$\alpha^{(1)}_{w_R}$ Modal slope of wing at hinge

$\alpha^{(1)}_{w_g}$ Modal slope of wing at gear point

$z^{(1)}_{w_g}$ Modal deflection of wing at gear point

a_1 Mass property of wing

a_2 Mass property of wing

a_3 Mass property of wing

a_4 Mass property of wing

a_5 Aerodynamic damping constant of wing

a_6 Aerodynamic damping constant of wing

a_7 Aerodynamic damping constant of wing

a_8 Aerodynamic damping constant of wing

a_9 Aerodynamic damping constant of wing

a_{10} Aerodynamic damping constant of wing

e_ξ Rotor blade lag hinge offset from rotor center

m_ξ Rotor blade lag mass

σ_ξ Rotor blade lag moment about lag hinge

I_ξ Rotor blade lag inertia about lag hinge

k_ξ Rotor blade lag spring rate

P Preload of rotor blade lag damper

c Viscous portion of rotor blade lag damper

r_0 Radial arm of blade lag damper

ξ_0 Single amplitude of rotor blade lag motion

ω Trial frequency in IBM program

REV

SYMBOLS (Continued)

$\Delta\omega$ Frequency increment

ω_L Limit frequency of natural frequency search

ℓ Number of rotors per aircraft

n Number of blades per rotor

THEORY Determination of reference natural frequency, effective hub mass, effective hub spring and effective hub damper for a coleman type mechanical instability analysis

Consider an aircraft on the ground or partially airborne as shown on Pages A-2, 3 and 4. The following degrees of freedom shall be assumed:

y, α Coupled lateral-roll motion of aircraft about center of gravity

α_w Rigid body flap motion of floating wing on its hinge

H_1 Generalized deflection of wing tip in the first pinned-free bending mode

α_s Angular displacement of main gear oleo

v Vertical displacement of wing gear oleo

Associated with the first bending mode are the quantities defined as follows:

ω_1 Natural frequency

$\alpha^{(1)}_{w_i}$ Modal slope at station i

$Z^{(1)}_{w_i}$ Modal deflection at station i

The total kinetic energy of the system is

$$T = \frac{1}{2} M \dot{y}^2 + \frac{1}{2} I_\alpha \dot{\alpha}^2 + \frac{1}{2} 2 \sum_i m_i \left[(\epsilon_4 + r_i)\dot{\alpha} + \dot{\alpha}_w r_i \cos\gamma_0 + Z^{(1)}_{w_i} \dot{H}_1 \right]^2$$

or

$$T = \frac{1}{2} M \dot{y}^2 + \frac{1}{2} I_\alpha \dot{\alpha}^2 + \frac{1}{2} 2 \sum_i m_i (r_i \cos\gamma_0)^2 \dot{\alpha}_w^2 + \sum_i m_i Z^{(1)2}_{w_i} \dot{H}_1^2$$
$$+ 2 \sum_i m_i \left[(\epsilon_4 + r_i) r_i \cos\gamma_0 \right] \dot{\alpha}\dot{\alpha}_w + 2 \sum_i m_i (\epsilon_4 + r_i) Z^{(1)}_{w_i} \dot{\alpha} \dot{H}_1$$

the term $\sum_i m_i \left[(\epsilon_4 + r_i)\dot{\alpha} \right]^2$ is dropped because it has

REV

THEORY (CONT'D)

BEEN INCLUDED IN I_α. BY ORTHOGONALITY OF NORMAL MODES, THE TERM

$$2\sum_i m_i (h_i Z_{W_i}^{(1)} \cos\gamma_0)\, \dot{\alpha}_W \dot{H}_1$$

IS EQUAL TO ZERO AND THEREFORE DROPPED ALSO.

THE TOTAL POTENTIAL ENERGY OF THE SYSTEM IS

$$\begin{aligned} V = {} & \tfrac{1}{2} 2 K_{t_y}(y - h_1\alpha - h_0\alpha_s)^2 + \tfrac{1}{2} k_{t_y}(y - h\alpha)^2 + \tfrac{1}{2} 2 k_{t_z}(\varepsilon_1\alpha + \varepsilon_0\alpha_s)^2 \\ & + \tfrac{1}{2} 2 K_s \ell_0^2 \alpha_s^2 + \tfrac{1}{2} 2 K_{t_{yW}}(y - h_2\alpha - \alpha_W h_3 \cos\gamma_0 - h_3 \alpha_{W_y}^{(1)} H_1)^2 \\ & + \tfrac{1}{2} 2 K_{t_{zW}}(\varepsilon_2\alpha + \varepsilon_3\alpha_W + Z_{W_y}^{(1)} H_1 + v)^2 + \tfrac{1}{2} 2 K_{sW} v^2 \\ & + \tfrac{1}{2} 2 K_{\alpha_W}(\alpha_W + \alpha_{W_R}^{(1)} H_1)^2 \\ & + \tfrac{1}{2}(T_F h_F + T_A h_A)\alpha^2 + \tfrac{1}{2} 2 \left(\sum_i m_i Z_{W_i}^{(1)2}\right)\omega_1^2 H_1^2 \end{aligned}$$

THE TOTAL DISSIPATION FUNCTION OF THE SYSTEM IS

$$\begin{aligned} D = {} & \tfrac{1}{2} 2 C_s \ell_0^2 \dot{\alpha}_s^2 + \tfrac{1}{2} 2 C_{s_W} \dot{v}^2 + \tfrac{1}{2} 2 C_{\alpha_W}(\dot{\alpha}_W + \alpha_{W_R}^{(1)} \dot{H}_1)^2 \\ & + \tfrac{1}{2} 2 \sum_i C_{z_i}\left[(\varepsilon_4 + h_5)\dot{\alpha} + \dot{\alpha}_W h_i \cos\gamma_0 + Z_{W_i}^{(1)} \dot{H}_1\right]^2 \end{aligned}$$

THESE ENERGIES COMPLETELY DEFINE THE SYSTEM FOR SMALL OSCILLATIONS OF THE TIME DEPENDENT VARIABLES y, α, α_W, H_1, α_s AND v. INTRODUCING NEW CONSTANTS, THE ENERGIES MAY BE WRITTEN IN SIMPLER FORM. LET THE KINETIC ENERGY BE GIVEN BY

$$\begin{aligned} T = {} & \tfrac{1}{2} M_{11} \dot{y}^2 + \tfrac{1}{2} M_{22} \dot{\alpha}^2 + \tfrac{1}{2} M_{33} \dot{\alpha}_W^2 + \tfrac{1}{2} M_{44} \dot{H}_1^2 \\ & + M_{23}\dot{\alpha}\dot{\alpha}_W + M_{24}\dot{\alpha}\dot{H}_1 \end{aligned}$$

LET THE POTENTIAL ENERGY BE GIVEN BY

$$\begin{aligned} V = {} & \tfrac{1}{2} K_{11} y^2 + \tfrac{1}{2} K_{22}\alpha^2 + \tfrac{1}{2} K_{33}\alpha_W^2 + \tfrac{1}{2} K_{44} H_1^2 + \tfrac{1}{2} K_{55}\alpha_s^2 \\ & + \tfrac{1}{2} K_{66} v^2 + K_{12} y\alpha + K_{13} y\alpha_W + K_{14} y H_1 + K_{15} y\alpha_s + \end{aligned}$$

REV

THEORY (CONT'D)

$$+ K_{23}\alpha\alpha_W + K_{24}\alpha H_1 + K_{25}\alpha\alpha_S + K_{26}\alpha v + K_{34}\alpha_W H_1$$
$$+ K_{36}\alpha_W v + K_{46} H_1 v$$

LET THE DISSIPATION FUNCTION BE GIVEN BY

$$D = \frac{1}{2} C_{22}\dot{\alpha}^2 + \frac{1}{2} C_{33}\dot{\alpha}_W^2 + \frac{1}{2} C_{44}\dot{H}_1^2 + \frac{1}{2} C_{55}\dot{\alpha}_S^2$$
$$+ \frac{1}{2} C_{66}\dot{v}^2 + C_{23}\dot{\alpha}\dot{\alpha}_W + C_{24}\dot{\alpha}\dot{H}_1 + C_{34}\dot{\alpha}_W\dot{H}_1$$

WHERE

$$M_{11} = M$$

$$M_{22} = I_\alpha$$

$$M_{33} = 2\sum_i m_i r_i^2 \cos^2\gamma_0$$

$$M_{44} = 2\sum_i m_i Z_{W_i}^{(1)2}$$

$$M_{23} = 2\sum_i m_i(\varepsilon_4 + r_i) r_i \cos\gamma_0$$

$$M_{24} = 2\sum_i m_i(\varepsilon_4 + r_i) Z_{W_i}^{(1)}$$

$$K_{11} = 2K_{t_y} + k_{t_y} + 2K_{t_{yW}}$$

$$K_{22} = 2h_1^2 K_{t_y} + h^2 k_{t_y} + 2\varepsilon_1^2 K_{t_z} + 2h_2^2 K_{t_{yW}} + 2\varepsilon_2^2 K_{t_{zW}} + T_F h_F + T_A h_A$$

$$K_{33} = 2h_3^2 K_{t_{yW}} \cos^2\gamma_0 + 2\varepsilon_3^2 K_{t_{zW}} + 2K_{\alpha_W}$$

$$K_{44} = 2\alpha_{W_g}^{(1)2} h_3^2 K_{t_{yW}} + 2Z_{W_g}^{(1)2} K_{t_{zW}} + 2\alpha_{W_h}^{(1)2} K_{\alpha_W} + 2\omega_1^2 \sum_i m_i Z_{W_i}^{(1)2}$$

$$K_{55} = 2h_0^2 K_{t_y} + 2\varepsilon_0^2 K_{t_z} + 2\ell_0^2 K_S$$

$$K_{66} = 2K_{t_{zW}} + 2K_{SW}$$

$$K_{12} = -2h_1 K_{t_y} - h k_{t_y} - 2h_2 K_{t_{yW}}$$

REV

THEORY (CONT'D)

$$K_{13} = -2 h_3 K_{t_{y_w}} \cos\gamma_0$$

$$K_{14} = -2 \alpha_{w_g}^{(1)} h_3 K_{t_{y_w}}$$

$$K_{15} = -2 h_0 K_{t_y}$$

$$K_{23} = 2 h_2 h_3 K_{t_{y_w}} \cos\gamma_0 + 2 \varepsilon_2 \varepsilon_3 K_{t_{z_w}}$$

$$K_{24} = 2 \alpha_{w_g}^{(1)} h_2 h_3 K_{t_{y_w}} + 2 Z_{w_g}^{(1)} \varepsilon_2 K_{t_{z_w}}$$

$$K_{25} = 2 h_0 h_1 K_{t_y} + 2 \varepsilon_0 \varepsilon_1 K_{t_z}$$

$$K_{26} = 2 \varepsilon_2 K_{t_{z_w}}$$

$$K_{34} = 2 \alpha_{w_g}^{(1)} h_3^2 K_{t_{y_w}} \cos\gamma_0 + 2 Z_{w_g}^{(1)} \varepsilon_3 K_{t_{z_w}} + 2 K_{\alpha_w} \alpha_{w_R}^{(1)}$$

$$K_{36} = 2 \varepsilon_3 K_{t_{z_w}}$$

$$K_{46} = 2 Z_{w_g}^{(1)} K_{t_{z_w}}$$

$$C_{22} = 2 \sum_i C_{z_i} (\varepsilon_4 + h_i)^2$$

$$C_{33} = 2 C_{\alpha_w} + 2 \sum_i C_{z_i} h_i^2 \cos^2\gamma_0$$

$$C_{44} = 2 C_{\alpha_w} \alpha_{w_R}^{(1)\,2} + 2 \sum_i C_{z_i} Z_{w_i}^{(1)\,2}$$

$$C_{55} = 2 C_3 l_0^2$$

$$C_{66} = 2 C_{s_w}$$

$$C_{23} = 2 \sum_i C_{z_i} (\varepsilon_4 + h_i) h_i \cos\gamma_0$$

$$C_{24} = 2 \sum_i C_{z_i} (\varepsilon_4 + h_i) Z_{w_i}^{(1)}$$

$$C_{34} = 2 C_{\alpha_w} \alpha_{w_R}^{(1)} + 2 \sum_i C_{z_i} h_i Z_{w_i}^{(1)} \cos\gamma_0$$

REV

Theory (Continued)

For convenience, all terms involving the summation integral will be denoted as follows:

$$a_1 = \sum_i M_i r_i^2$$

$$a_2 = \sum_i M_i Z_{n_i}^{(1)\,2}$$

$$a_3 = \sum_i M_i (E_4 + r_2) r_i$$

$$a_4 = \sum_i M_i (E_4 + r_i)\, Z_{w_i}^{(1)}$$

$$a_5 = \sum_i C_{z_i} (E_4 + r_i)^2$$

$$a_6 = \sum_i C_{z_i}\, r_i^2$$

$$a_7 = \sum_i C_{z_i}\, Z_{w_i}^{(1)2}$$

$$a_8 = \sum_i C_{z_i} (E_4 + r_i) r_i$$

$$a_9 = \sum_i C_{z_i} (E_4 + r_i) Z_{w_i}^{(1)}$$

$$a_{10} = \sum_i C_{z_i} r_i Z_{w_i}^{(1)}$$

REV

THEORY (CONT'D)

THE LAGRANGE EQUATIONS OF MOTION ARE

$$y: \quad M_{11}\ddot{y} + K_{11}y + K_{12}\alpha + K_{13}\alpha_w + K_{14}H_1 + K_{15}\alpha_s = 0$$

$$\alpha: \quad M_{22}\ddot{\alpha} + M_{23}\ddot{\alpha}_w + M_{24}\ddot{H}_1 + K_{22}\alpha + K_{12}y + K_{23}\alpha_w + K_{24}H_1 + K_{25}\alpha_s + K_{26}v + C_{22}\dot{\alpha} + C_{23}\dot{\alpha}_w + C_{24}\dot{H}_1 = 0$$

$$\alpha_w: \quad M_{33}\ddot{\alpha}_w + M_{23}\ddot{\alpha} + K_{33}\alpha_w + K_{13}y + K_{23}\alpha + K_{34}H_1 + K_{36}v + C_{33}\dot{\alpha}_w + C_{23}\dot{\alpha} + C_{34}\dot{H}_1 = 0$$

$$H_1: \quad M_{44}\ddot{H}_1 + M_{24}\ddot{\alpha} + K_{44}H_1 + K_{14}y + K_{24}\alpha + K_{34}\alpha_w + K_{46}v + C_{44}\dot{H}_1 + C_{24}\dot{\alpha} + C_{34}\dot{\alpha}_w = 0$$

$$\alpha_s: \quad K_{55}\alpha_s + K_{15}y + K_{25}\alpha + C_{55}\dot{\alpha}_s = 0$$

$$v: \quad K_{66}v + K_{26}\alpha + K_{36}\alpha_w + K_{46}H_1 + C_{66}\dot{v} = 0$$

ASSUMING HARMONIC MOTION OF THE FORM

$$q = q_0 e^{i\omega t}$$

FOR ALL THE VARIABLES YIELDS THE FOLLOWING SET OF MATRIX EQUATIONS (DAMPING TERMS OMITTED).

$$\begin{bmatrix} K_{11}-M_{11}\omega^2 & K_{12} & K_{13} & -K_{14} & K_{15} & \\ K_{12} & K_{22}-M_{22}\omega^2 & K_{23}-M_{23}\omega^2 & K_{24}-M_{24}\omega^2 & K_{25} & K_{26} \\ K_{13} & K_{23}-M_{23}\omega^2 & K_{33}-M_{33}\omega^2 & K_{34} & & K_{36} \\ K_{14} & K_{24}-M_{24}\omega^2 & K_{34} & K_{44}-M_{44}\omega^2 & & K_{46} \\ K_{15} & K_{25} & & & K_{55} & \\ & K_{26} & K_{36} & K_{46} & & K_{66} \end{bmatrix} \begin{bmatrix} y \\ \alpha \\ \alpha_w \\ H_1 \\ \alpha_s \\ v \end{bmatrix}_0 = 0$$

REV

THEORY (CONT'D)

THE CRITERION FOR NATURAL FREQUENCIES IS THAT THE DETERMINANT OF THE SIX (6) EQUATIONS BE ZERO.

$$\Delta = 0$$

EACH NATURAL FREQUENCY MAY BE USED AS A REFERENCE FREQUENCY ω_r TO PERFORM A COLEMAN TYPE MECHANICAL INSTABILITY ANALYSIS.

THE EFFECTIVE MASS, SPRING AND DAMPER AT THE ROTOR HUB IS DERIVED BY EQUATING THE ENERGIES OF THE ACTUAL SYSTEM TO THE ENERGIES OF AN EQUIVALENT SYSTEM AT THE HUB. THE KINETIC, POTENTIAL ENERGY OF THE HUB SYSTEM IS

$$T = \frac{1}{2} M_r \left[(\dot{y} + h_F \dot{\alpha})^2 + (\dot{y} + h_A \dot{\alpha})^2 \right]$$

$$V = \frac{1}{2} K_r \left[(y + h_F \alpha)^2 + (y + h_A \alpha)^2 \right]$$

$$D = \frac{1}{2} C_r \left[(\dot{y} + h_F \alpha)^2 + (\dot{y} + h_A \dot{\alpha})^2 \right]$$

BY EQUATING ENERGIES AND EMPLOYING THE SUBSTITUTION

$$q = q_0 e^{i\omega t}$$

FOR ALL THE VARIABLES, THE EFFECTIVE QUANTITIES M_r, K_r AND C_r ARE DETERMINED.

$$M_r = \left[\frac{1}{2} M_{11} y_0^2 + \frac{1}{2} M_{22} \alpha_0^2 + \frac{1}{2} M_{33} \alpha_{W_0}^2 + \frac{1}{2} M_{44} H_{10}^2 + M_{23} \alpha_0 \alpha_{W_0} + M_{24} \alpha_0 H_{10} \right] \div \frac{1}{2} \left[(y_0 + h_F \alpha_0)^2 + (y_0 + h_A \alpha_0)^2 \right]$$

$$K_r = M_r \omega_r^2$$

$$C_r = \left[\frac{1}{2} C_{22} \alpha_0^2 + \frac{1}{2} C_{33} \alpha_{W_0}^2 + \frac{1}{2} C_{44} H_{10}^2 + \frac{1}{2} C_{55} \alpha_{S_0}^2 + \frac{1}{2} C_{66} v_0^2 + C_{23} \alpha_0 \alpha_{W_0} C_{24} \alpha_0 H_{10} + C_{34} \alpha_{W_0} H_{10} \right] \div \frac{1}{2} \left[(y_0 + h_F \alpha_0)^2 + (y_0 + h_A \alpha_0)^2 \right]$$

REV

AERODYNAMIC WING SPRING:

APPENDIX B, PAGE B-16

REV

APPENDIX A

2. Ground Instability Analysis Axle Gear

REV

HELICOPTER RANGE EXTENSION USING FLOATING WING FUEL TANKS

GROUND INSTABILITY ANALYSIS FOR AN AXLE TYPE LANDING GEAR WHICH ROTATE ABOUT THE LATERAL AXIS

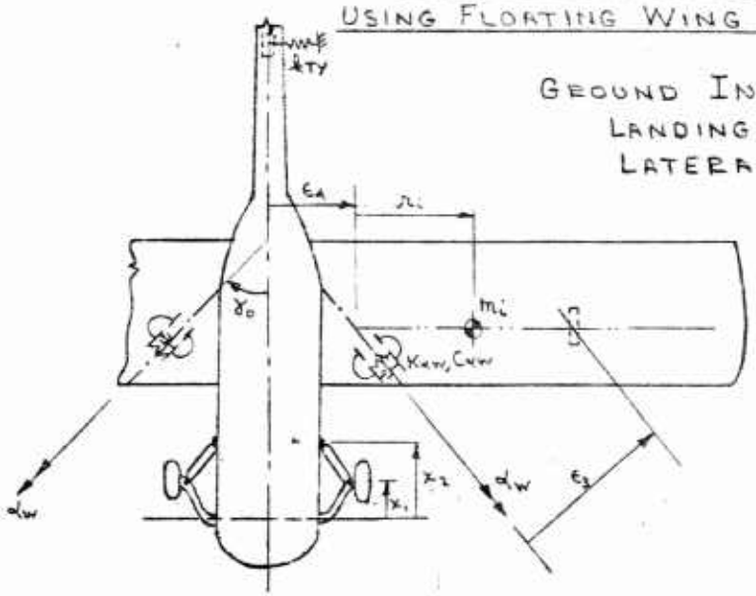

GENERALIZED COORDINATES

- y, LATERAL MOTION OF THE HELICOPTER AT THE C.G. LOCATION
- α, ROLL MOTION OF THE HELICOPTER
- α_w, RIGID BODY FLAP MOTION OF FLOATING WING
- H_1, GENERALIZED DEFLECTION OF THE WING TIP IN THE FIRST PINNED-FREE BENDING MODE
- α_s, ANGULAR DISPLACEMENT OF MAIN GEAR
- v, VERTICAL DISPLACEMENT OF WING GEAR OLEO

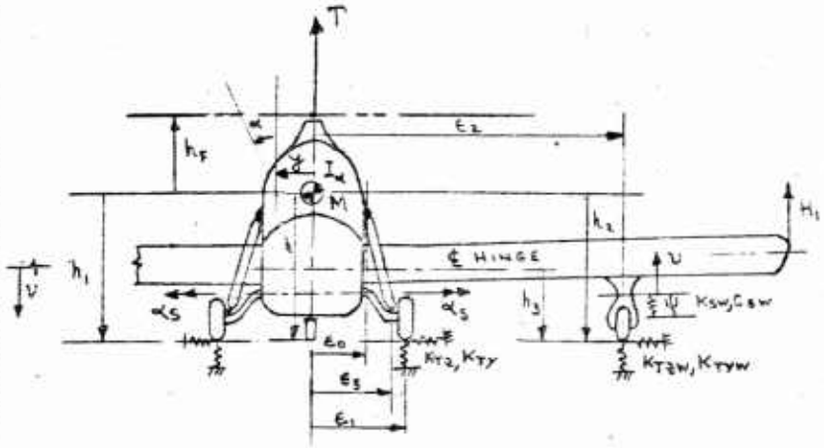

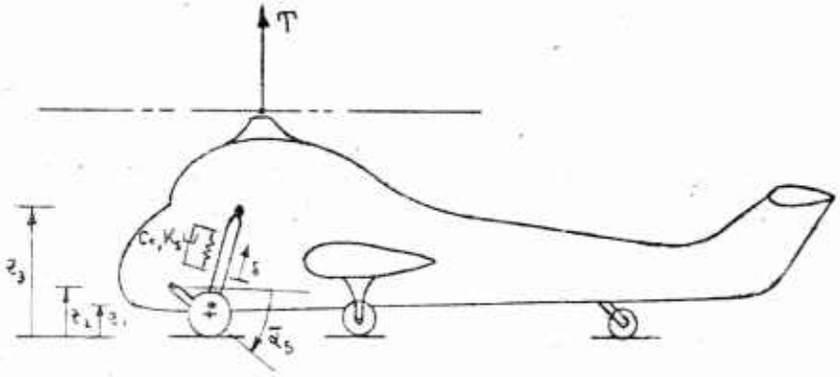

HELICOPTER RANGE EXTENSION USING FLOATING WING FUEL TANKS

GROUND INSTABILITY ANALYSIS, AXLE GEAR

IN THIS GROUND INSTABILITY ANALYSIS FOR THE AXLE TYPE LANDING GEAR SIMILARITIES BETWEEN THIS ANALYSIS AND THE PYRAMID GEAR ANALYSIS ON PAGES A-2 TO A-14 ALLOWS THE USE OF EXPRESSIONS PREVIOUSLY DERIVED. THE KINETIC ENERGY EXPRESSION WHICH WAS DERIVED APPLIES ALSO TO THE AXLE GEAR, HOWEVER THE EXPRESSIONS FOR POTENTIAL ENERGY AND DAMPING REQUIRE REVISION

THE TOTAL POTENTIAL ENERGY OF THE SYSTEM, V

$$V = \frac{1}{2}\times 2K_{TY}\left[y - h_1\alpha\right]^2 + \frac{1}{2}\times k_{TY}\left[y - h\alpha\right]^2 + \frac{1}{2}\times 2K_{TZ}\left[\epsilon_1\alpha + x_1\alpha_s\right]^2$$
$$+\frac{1}{2}\times 2K_s\left[\delta\right]^2 + \frac{1}{2}\times 2K_{TYW}\left[y - h_2\alpha - \alpha_w h_3\cos\gamma_0 - h_3\alpha_{wg}^{(1)}H_1\right]^2$$
$$+\frac{1}{2}\times 2K_{TZW}\left[\epsilon_2\alpha + \epsilon_3\alpha_w + z_{wg}^{(1)}H_1 + v\right]^2 + \frac{1}{2}\times 2K_{SW}\left[v\right]^2 + \frac{1}{2}\times 2K_{\alpha W}\left[\alpha_w + \alpha_{wl}^{(1)}H_1\right]^2$$
$$+\frac{1}{2}\left[T h_F\right]\alpha^2 + \frac{1}{2}\times 2\left[\sum_i m_i z_{wi}^{(1)2}\right]\omega_1^2 H_1^2$$

THE TOTAL ENERGY DISSIPATED BY THE SYSTEM, D

$$D = \frac{1}{2}\times 2C_s\left[\dot{\delta}\right]^2 + \frac{1}{2}\times 2C_{SW}\left[\dot{v}\right]^2 + \frac{1}{2}\times 2C_{\alpha W}\left[\dot{\alpha}_w + \alpha_{wl}^{(1)}\dot{H}_1\right]^2$$
$$+\frac{1}{2}\times 2\sum_i C_{zi}\left[(\epsilon_4 + r_i)\dot{\alpha} + \dot{\alpha}_w r_i\cos\gamma_0 + z_{wi}^{(1)}\dot{H}_1\right]^2$$

THE COORDINATE δ WHICH APPEARS IN THE ENERGY EXPRESSIONS ABOVE DEFINES AXIAL OLEO STRUT MOTION. HOWEVER, THIS COORDINATE δ CAN BE ELIMINATED BY DEFINING THE AXIAL STRUT MOTION AS A FUNCTION OF THE ASSUMED GENERALIZED COORDINATE α_s.

RESOLVING THE ANGULAR MOTION α_s INTO LINEAR MOTION ALONG THE OLEO STRUT,

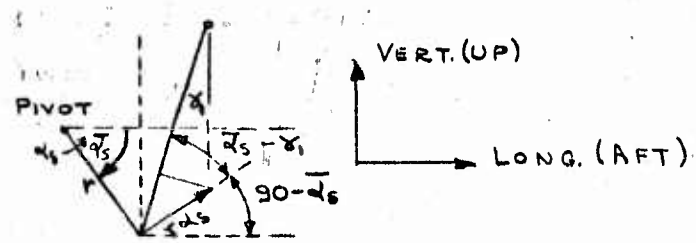

REV

Linear motion along the oleo strut projection in the vertical, longitudinal plane.

Now, the motion along the strut is obtained from in projection in the vertical long plane.

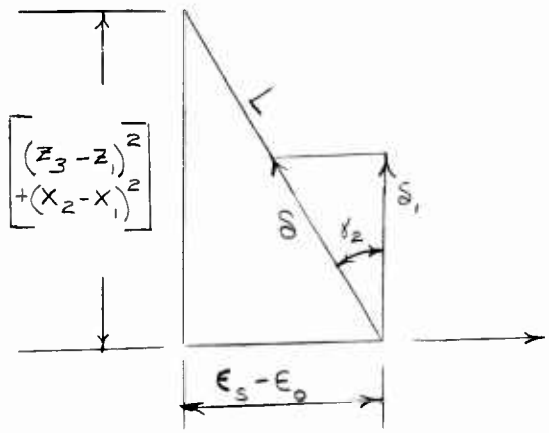

L Length of Oleo Strut

$$\sin\gamma_2 = \frac{\epsilon_s-\epsilon_o}{L}$$

$$\delta\cos\gamma_2 = \delta_1$$

$$\delta = \frac{\delta_1}{\cos\gamma_2} = \frac{r\alpha_s\cos(\bar{\alpha}_s-\alpha_1)}{\cos\gamma_2}$$

$$\delta = \frac{r\alpha_s(\cos\bar{\alpha}_s\cos\gamma_1+\sin\bar{\alpha}_s\sin\gamma_1)}{\cos\gamma_2}$$

$$\cos\bar{\alpha}_s = \frac{x_1}{r}$$

$$\sin\bar{\alpha}_s = \frac{z_2-z_1}{r}$$

$$\gamma_1 = \tan^{-1}\frac{x_2-x_1}{z_3-z_1}$$

$$\gamma_2 = \sin^{-1}\frac{\epsilon_s-\epsilon_o}{L}$$

$$\delta = \frac{\alpha_s\left[x_1\cos\gamma_1+(z_2-z_1)\sin\gamma_1\right]}{\cos\gamma_2}$$

REV

Letting, $$\ell_o = \frac{\left[x_1\cos\gamma_1+(z_2-z_1)\sin\gamma_1\right]}{\cos\gamma_2}$$

THEN,

$$\delta = l_0 \alpha_s$$

$$\dot{\delta} = l_0 \dot{\alpha}_s$$

SUBSTITUTING IN THE POTENTIAL AND DAMPING ENERGY EXPRESSIONS,

$$V = \frac{1}{2} \times 2\, K_{TY} \left[y - h_1 \alpha \right] + \frac{1}{2} \times k_{TY} \left[y - h \alpha \right] + \frac{1}{2} \times 2\, K_{TY} \left[\epsilon_1 \alpha + x_1 \alpha_s \right]^2$$
$$+ \frac{1}{2} \times 2\, K_s \left[l_0 \alpha_s \right]^2 + \frac{1}{2} \times 2\, K_{TYW} \left[y - h_2 \alpha - \alpha_w h_3 \cos \gamma_0 - h_3 \alpha_{wg}^{(1)} H_1 \right]$$
$$+ \frac{1}{2} \times 2\, K_{TZW} \left[\epsilon_3 \alpha + \epsilon_3 \alpha_w + z_{wg}^{(1)} H_1 + U \right]^2 + \frac{1}{2} \times 2\, K_{SW} \left[U \right]^2$$
$$+ \frac{1}{2} \times 2\, K_{dW} \left[\alpha_w + \alpha_{wh}^{(1)} H_1 \right]^2 + \frac{1}{2} \left[T h_F \right] \alpha^2 + \frac{1}{2} \times 2 \left[\sum_i m_i z_{wi}^{(1)2} \right] \omega_1^2 H_1^2$$

$$D = \frac{1}{2} \times 2\, C_s \left[l_0 \dot{\alpha}_s \right] + \frac{1}{2} \times 2\, C_{SW} \left[\dot{U} \right]^2 + \frac{1}{2} \times 2\, C_{dW} \left[\dot{\alpha}_w + \alpha_{wh}^{(1)} \dot{H}_1 \right]^2$$
$$+ \frac{1}{2} \times 2 \sum_i C_{zi} \left[(\epsilon_4 + r_i) \dot{\alpha} + \dot{\alpha}_w r_i \cos \gamma_0 + z_{wi}^{(1)} \dot{H}_1 \right]^2$$

THE ENERGY EXPRESSIONS DERIVED FOR THE PYRAMID GEAR CAN BE MADE IDENTICAL TO THE AXLE TYPE GEAR BY THE FOLLOWING CHANGES,

$$h_0 = 0$$
$$\epsilon_0 = x_1$$
$$h_A = 0$$
$$T_F = T$$

AND LETTING,

$$l_0 = \frac{\left[x_1 \cos \gamma_1 + (z_2 - z_1) \sin \gamma_1 \right]}{\cos \gamma_2}$$

CONSIDERING THE REDEFINITION OF THE SYMBOLS SHOWN ABOVE, THE REMAINING PORTION OF THIS ANALYSIS CAN BE PERFORMED USING THE PYRAMID GEAR ANALYSIS.

REV

APPENDIX A

3. Digital Computer Program For Ground Instability

IBM PROGRAM No. 169

MECHANICAL INSTABILITY ANALYSIS OF H-21 HELICOPTER RANGE EXTENSION USING FLOATING WING FUEL TANKS

$$
\begin{bmatrix} \alpha \\ \alpha_W \\ H_1 \\ \alpha_S \\ v \end{bmatrix}_0
= -
\begin{bmatrix}
K_{12} & K_{13} & K_{14} & K_{15} & \\
K_{22}-M_{22}\omega^2 & K_{23}-M_{23}\omega^2 & K_{24}-M_{24}\omega^2 & K_{25} & K_{26} \\
K_{23}-M_{23}\omega^2 & K_{33}-M_{33}\omega^2 & K_{34} & & K_{36} \\
K_{24}-M_{24}\omega^2 & K_{34} & K_{44}-M_{44}\omega^2 & & K_{46} \\
K_{25} & & & K_{55} &
\end{bmatrix}^{-1}
\begin{bmatrix} K_{11}-M_h\omega^2 \\ K_{12} \\ K_{13} \\ K_{14} \\ K_{15} \end{bmatrix}
$$

$$M_h = \left[\tfrac{1}{2}M_{11}y_0^2 + \tfrac{1}{2}M_{22}\alpha_0^2 + \tfrac{1}{2}M_{33}\alpha_{W_0}^2 + \tfrac{1}{2}M_{44}H_{10}^2 + M_{23}\alpha_0\alpha_{W_0} + M_{24}\alpha_0 H_{10}\right]$$
$$\div \tfrac{1}{2}\left[(y_0 + h_F\alpha_0)^2 + (h-1)(y_0 + h_A\alpha_0)^2\right]$$

$$K_h = M_h\omega^2$$

$$C_h = \left[\tfrac{1}{2}C_{22}\alpha_0^2 + \tfrac{1}{2}C_{33}\alpha_{W_0}^2 + \tfrac{1}{2}C_{44}H_{10}^2 + \tfrac{1}{2}C_{55}\alpha_{S_0}^2 + \tfrac{1}{2}C_{66}v_0^2 + C_{23}\alpha_0\alpha_{W_0}\right.$$
$$\left. C_{24}\alpha_0 H_{10} + C_{34}\alpha_{W_0}H_{10}\right] \div \tfrac{1}{2}\left[(y_0 + h_F\alpha_0)^2 + (h-1)(y_0 + h_A\alpha_0)^2\right]$$

$$\Lambda_1 = \frac{e_f\sigma_f}{I_f}$$

$$\Lambda_2 = \frac{k_f}{I_f\omega^2}$$

$$\Lambda_3 = \frac{n\sigma_f^2}{2M_h I_f}$$

$$\Omega_c = \left(\frac{1+\sqrt{\Lambda_1+\Lambda_2-\Lambda_1\Lambda_2}}{1-\Lambda_1}\right)\omega$$

$$C_f = h_0^2\left(\frac{4P}{\pi h_0 f_0\sqrt{\Lambda_1\Omega_c^2+\Lambda_2\omega^2}} + C\right)$$

REV

$$B_y B_f = \frac{n(\sigma_f\omega)^2}{4\left(\frac{\Omega_c}{\omega}-1\right)}$$

$$\mu = \frac{C_h C_f}{B_y B_f}$$

IBM PROGRAM No. 169 MECHANICAL INSTABILITY ANALYSIS OF H-21 HELICOPTER RANGE EXTENSION USING FLOATING WING FUEL TANKS

$$M_{11} = M$$

$$M_{22} = I_\alpha$$

$$M_{33} = 2 a_1 \cos^2 \gamma_0$$

$$M_{44} = 2 a_2$$

$$M_{23} = 2 a_3 \cos \gamma_0$$

$$M_{24} = 2 a_4$$

$$K_{11} = 2 K_{t_y} + k_{t_y} + 2 K_{t_{y_W}}$$

$$K_{22} = 2 h_1^2 K_{t_y} + h^2 k_{t_y} + 2 \varepsilon_1^2 K_{t_z} + 2 h_2^2 K_{t_{y_W}} + 2 \varepsilon_2^2 K_{t_{z_W}} + T_F h_F + T_A h_A$$

$$K_{33} = 2 h_3^2 K_{t_{y_W}} \cos^2 \gamma_0 + 2 \varepsilon_3^2 K_{t_{z_W}} + 2 K_{\alpha_W}$$

$$K_{44} = 2 \alpha_{W_g}^{(1)2} h_3^2 K_{t_{y_W}} + 2 Z_{W_g}^{(1)2} K_{t_{z_W}} + 2 \alpha_{W_R}^{(1)2} K_{\alpha_W} + 2 \omega_1^2 a_2$$

$$K_{55} = 2 h_0^2 K_{t_y} + 2 \varepsilon_0^2 K_{t_z} + 2 l_0^2 K_s$$

$$K_{66} = 2 K_{t_{z_W}} + 2 K_{s_W}$$

$$K_{12} = -2 h_1 K_{t_y} - h k_{t_y} - 2 h_2 K_{t_{y_W}}$$

$$K_{13} = -2 h_3 K_{t_{y_W}} \cos \gamma_0$$

$$K_{14} = -2 \alpha_{W_g}^{(1)} h_3 K_{t_{y_W}}$$

$$K_{15} = -2 h_0 K_{t_y}$$

$$K_{23} = 2 h_2 h_3 K_{t_{y_W}} \cos \gamma_0 + 2 \varepsilon_2 \varepsilon_1 K_{t_{z_W}}$$

$$K_{24} = 2 \alpha_{W_g}^{(1)} h_2 h_3 K_{t_{y_W}} + 2 Z_{W_g}^{(1)} \varepsilon_2 K_{t_{z_W}}$$

$$K_{25} = 2 h_0 h_1 K_{t_y} + 2 \varepsilon_0 \varepsilon_1 K_{t_z}$$

$$K_{26} = 2 \varepsilon_2 K_{t_{z_W}}$$

$$K_{34} = 2 \alpha_{W_g}^{(1)} h_3^2 K_{t_{y_W}} \cos \gamma_0 + 2 Z_{W_g}^{(1)} \varepsilon_3 K_{t_{z_W}} + 2 K_{\alpha_W} \alpha_{W_R}^{(1)}$$

REV

IBM PROGRAM No. 169 MECHANICAL INSTABILITY ANALYSIS OF H-21 HELICOPTER RANGE EXTENSION USING FLOATING WING FUEL TANKS

$K_{36} = 2\,\varepsilon_3 K_{t_{z_W}}$

$K_{46} = 2\,Z^{(1)}_{w_q} K_{t_{z_W}}$

$C_{22} = 2\,a_5$

$C_{33} = 2\,C_{\alpha_W} + 2\,a_6 \cos^2\gamma_0$

$C_{44} = 2\,C_{\alpha_W}\alpha^{(1)2}_{w_R} + 2\,a_7$

$C_{55} = 2\,C_5\,\ell_0^2$

$C_{66} = 2\,C_{5_W}$

$C_{23} = 2\,a_8 \cos\gamma_0$

$C_{24} = 2\,a_9$

$C_{34} = 2\,C_{\alpha_W}\alpha^{(1)}_{w_R} + 2\,a_{10}\cos\gamma_0$

$\omega =$ _____ VARY UNTIL $\Delta = 0$

$\Delta =$

$K_{11} - M_{11}\omega^2$	K_{12}	K_{13}	K_{14}	K_{15}	
K_{12}	$K_{22} - M_{22}\omega^2$	$K_{23} - M_{23}\omega^2$	$K_{24} - M_{24}\omega^2$	K_{25}	K_{26}
K_{13}	$K_{23} - M_{23}\omega^2$	$K_{33} - M_{33}\omega^2$	K_{34}		K_{36}
K_{14}	$K_{24} - M_{24}\omega$	K_{34}	$K_{44} - M_{44}\omega^2$		K_{46}
K_{15}	K_{25}			K_{55}	
	K_{26}	K_{36}	K_{46}		K_{66}

$y_0 = 1.0$

REV

IBM PROGRAM No. 169 MECHANICAL INSTABILITY ANALYSIS OF H-21 HELICOPTER RANGE EXTENSION USING FLOATING WING FUEL TANKS

OUTPUT

PRINT RESULTS OF EACH MODE ON $8\frac{1}{2}'' \times 11''$ SHEET.

ω
y_0
α_0
α_{W_0}
H_{10}
α_{S_0}
v_0
M_ℓ
K_λ
C_λ
Λ_1
Λ_2
Λ_3
Ω_c
C_f
B_y B_f
μ

ω
y_0
α_0
ETC

REV

SAMPLE OUTPUT SHEETS

June 1960

MECHANICAL INSTABILITY ANALYSIS OF
SIKORSKY S 58 HELICOPTER
USING FLOATING WING FUEL TANKS

JOB# 3863-1 MARCH 7, 1960 PAGE # 1

	1ST MODE	2ND MODE	3RD MODE	
OMEGA	38998441 50	74313910 50	13171933 51	NAT. FREQ.
Y	10000000 50	10000000 50	10000000 50	FUS. LAT.
ALFAO	-29933781 48	10647407 48	33927523 48	FUS. ROLL
ALFWO	53847269 48	-14577245 48	-91637133 48	RIGID WING
H ONE	51361267 48	15615892 49	75974338 49	FLEX. WING
ALFAS	78105284 48	-27781962 48	-88526150 48	FUS. OLEO
VZERO	23465452 48	-62634566 49	36951111 50	WING OLEO
MR	40947862 51	22508829 51	30741751 51	EFFECTIVE MASS
KR	62276718 52	12430629 53	53336879 53	EFFECTIVE SPRING
CR	52634527 50	66292913 51	47839972 52	EFFECTIVE DAMPER
LAMB1	56197151 48	56197151 48	56197151 48	COLEMAN'S PARAMETERS
LAMB2				
LAMB3	14517783 48	26410623 48	19337616 48	
OMEGC	51115958 50	97404579 50	17264689 51	CENTER OF INSTABILITY
CZETA	11919738 55	62552378 54	35291038 54	BLADE DAMPER
BYBZ	19718102 55	71599640 55	22494155 56	COLEMAN'S REQ'D DAMPING
MU	31817959 50	57916203 50	75056043 50	DAMPING RATIO

MODE SHAPE SEE PG. A-2

	4TH MODE
OMEGA	41032613 51
Y	10000000 50
ALFAO	-11754545 49
ALFWO	22036481 49
H ONE	-23867062 51
ALFAS	30670770 49
VZERO	39390275 50
MR	58964313 51
KR	99276757 54
CR	87509771 51
LAMB1	56197151 48
LAMB2	
LAMB3	10081898 48
OMEGC	53782183 51
CZETA	11328822 54
BYBZ	21828756 57
MU	45416358 48

TRIAL FREQ.	DETERMINANT VALUE
10000000 50	39620362 81
20000000 50	28960975 81
30000000 50	14006916 81
40000000 50	-14443435 80
50000000 50	-12914749 81
60000000 50	-16044186 81
70000000 50	-75852227 80
80000000 50	13451977 81
90000000 50	44537749 81
10000000 51	78292284 81
11000000 51	10113937 82
12000000 51	92005636 81
13000000 51	21132505 81
14000000 51	-15092438 82
15000000 51	-47402536 82
16000000 51	-10088101 83
17000000 51	-18266215 83
18000000 51	-30088625 83
19000000 51	-46456650 83
20000000 51	-68338022 83
21000000 51	-96736473 83
22000000 51	-13265142 84
23000000 51	-17702562 84
24000000 51	-23067877 84
25000000 51	-29422779 84
26000000 51	-36798777 84
27000000 51	-45186013 84
28000000 51	-54519530 84
29000000 51	-64663598 84
30000000 51	-75393404 84
31000000 51	-86375230 84
32000000 51	-97142280 84
33000000 51	-10706909 85
34000000 51	-11534099 85

TRIAL FREQ.	DETERMINANT VALUE
35000000 51	-12092249 85
36000000 51	-12251952 85
37000000 51	-11853982 85
38000000 51	-10704784 85
39000000 51	-85716084 84
40000000 51	-51770691 84
41000000 51	-19354306 83
42000000 51	67637196 84
43000000 51	16142810 85
44000000 51	28463099 85
45000000 51	44323787 85
46000000 51	64411477 85
47000000 51	89509903 85
48000000 51	12051225 86
49000000 51	15842743 86
50000000 51	20439634 86

APPENDIX A

4. Ground Instability Calculations

VERTOL H-21 Helicopter

REV

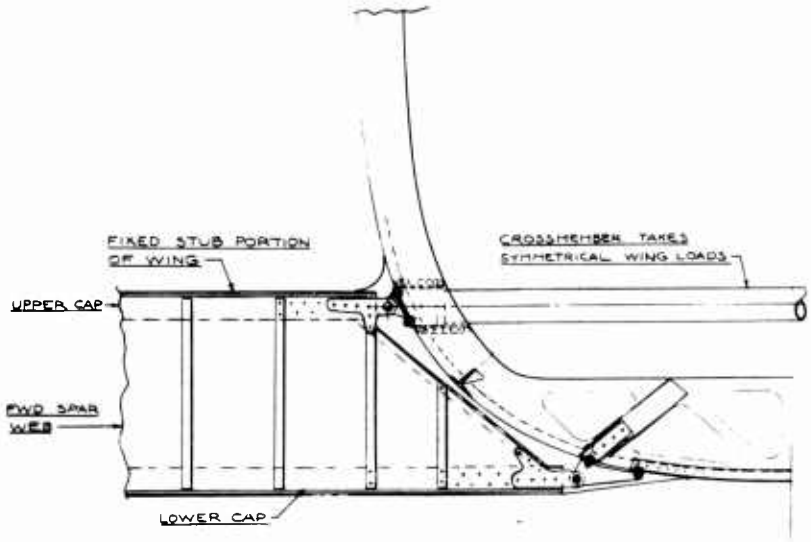

VIEW C-C
1/4 SIZE

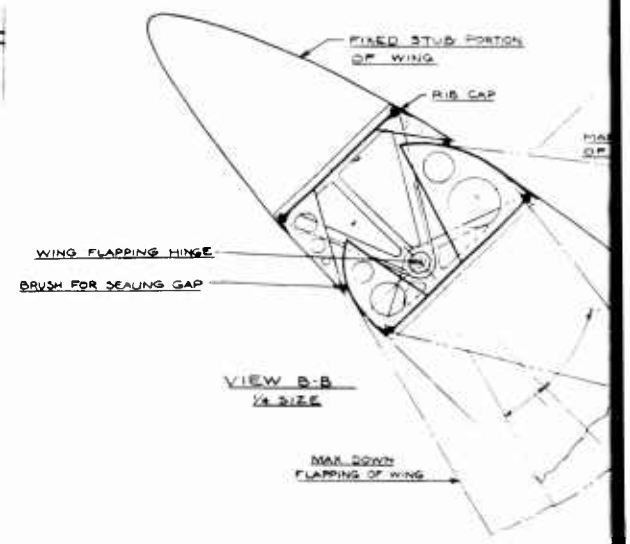

VIEW B-B
1/4 SIZE

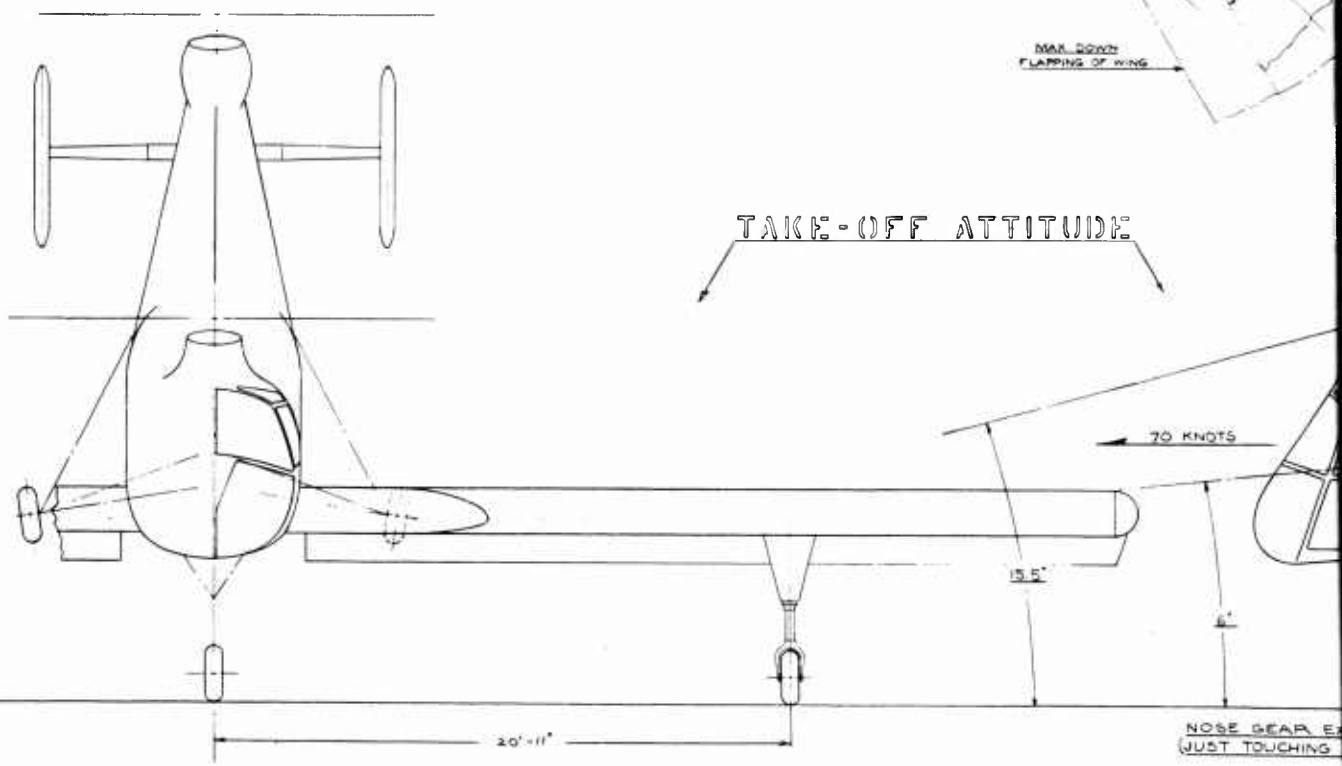

1

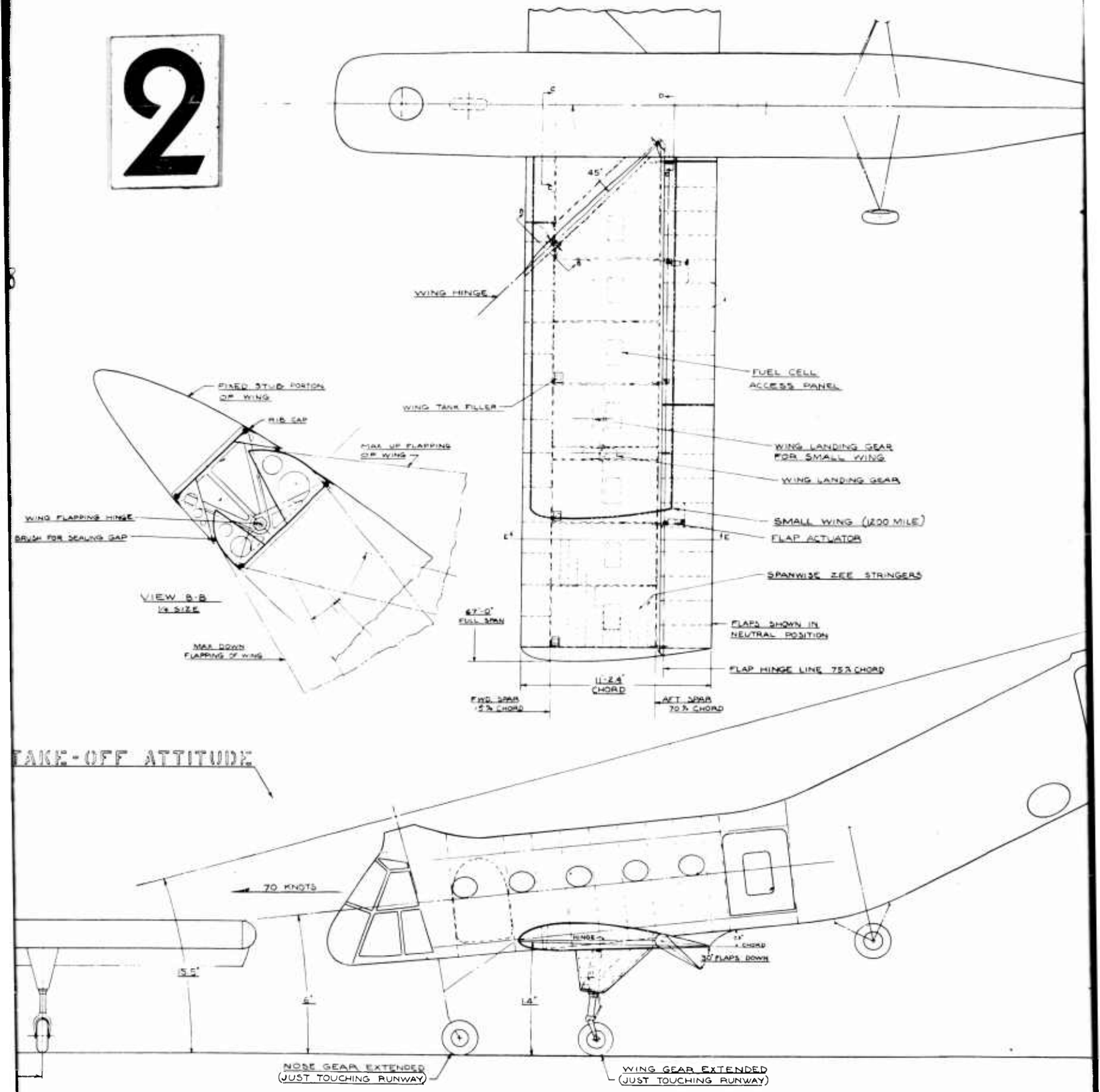
2
45°
WING HINGE
FUEL CELL ACCESS PANEL
WING TANK FILLER
WING LANDING GEAR FOR SMALL WING
WING LANDING GEAR
SMALL WING (1200 MILE)
FLAP ACTUATOR
SPANWISE ZEE STRINGERS
FLAPS SHOWN IN NEUTRAL POSITION
FLAP HINGE LINE 75% CHORD
67'-0" FULL SPAN
11'-2.4" CHORD
FWD. SPAR 15% CHORD
AFT. SPAR 70% CHORD
FIXED STUB PORTION OF WING
RIB CAP
MAX. UP FLAPPING OF WING
WING FLAPPING HINGE
BRUSH FOR SEALING GAP
VIEW B-B
1/4 SIZE
MAX. DOWN FLAPPING OF WING
TAKE-OFF ATTITUDE
70 KNOTS
HINGE
30° FLAPS DOWN
15.5'
6'
14'
NOSE GEAR EXTENDED (JUST TOUCHING RUNWAY)
WING GEAR EXTENDED (JUST TOUCHING RUNWAY)

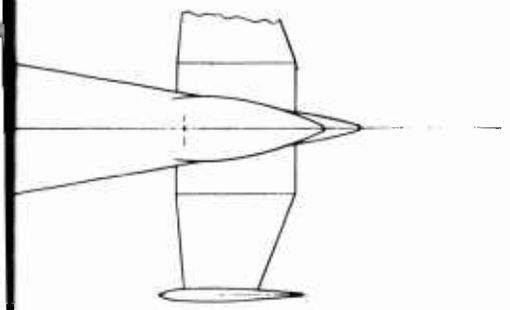

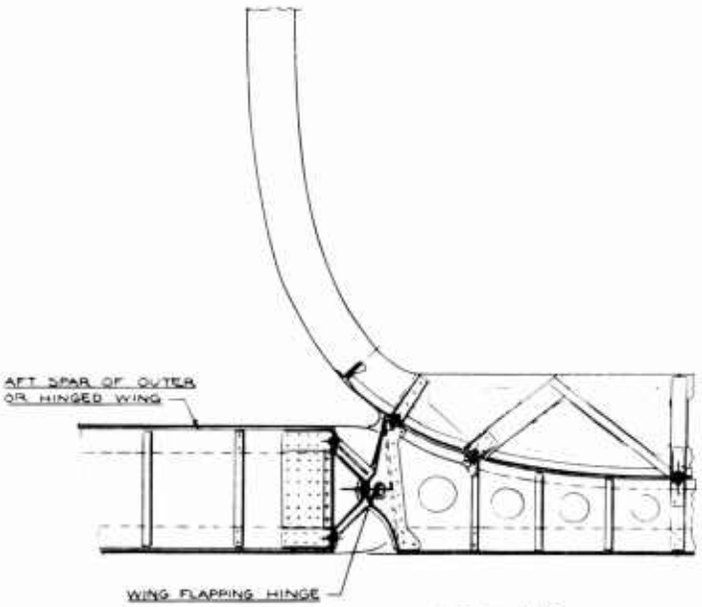

VIEW D-D
½ SIZE

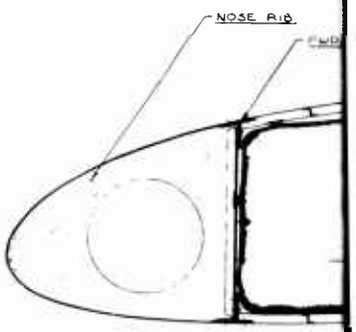

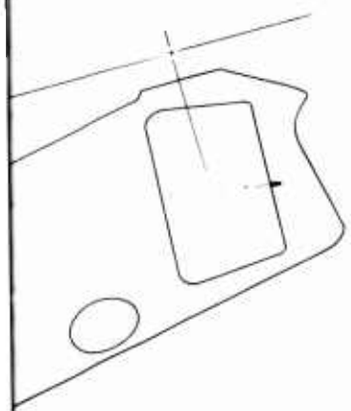

STATIC POSITION

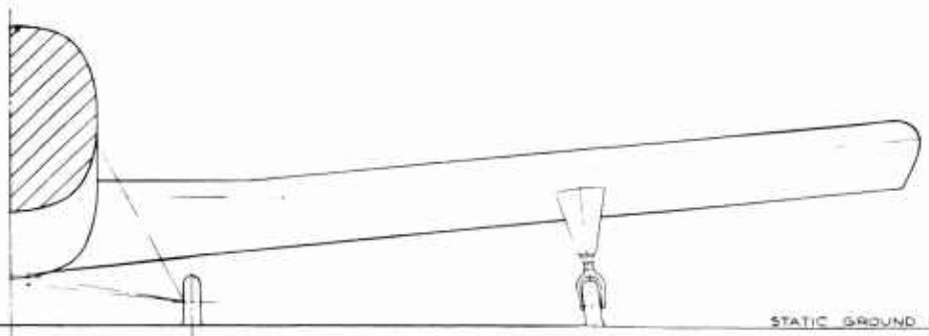

VIEW A-A

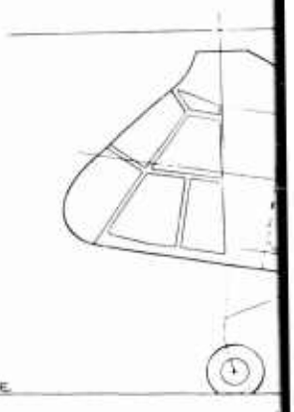

3

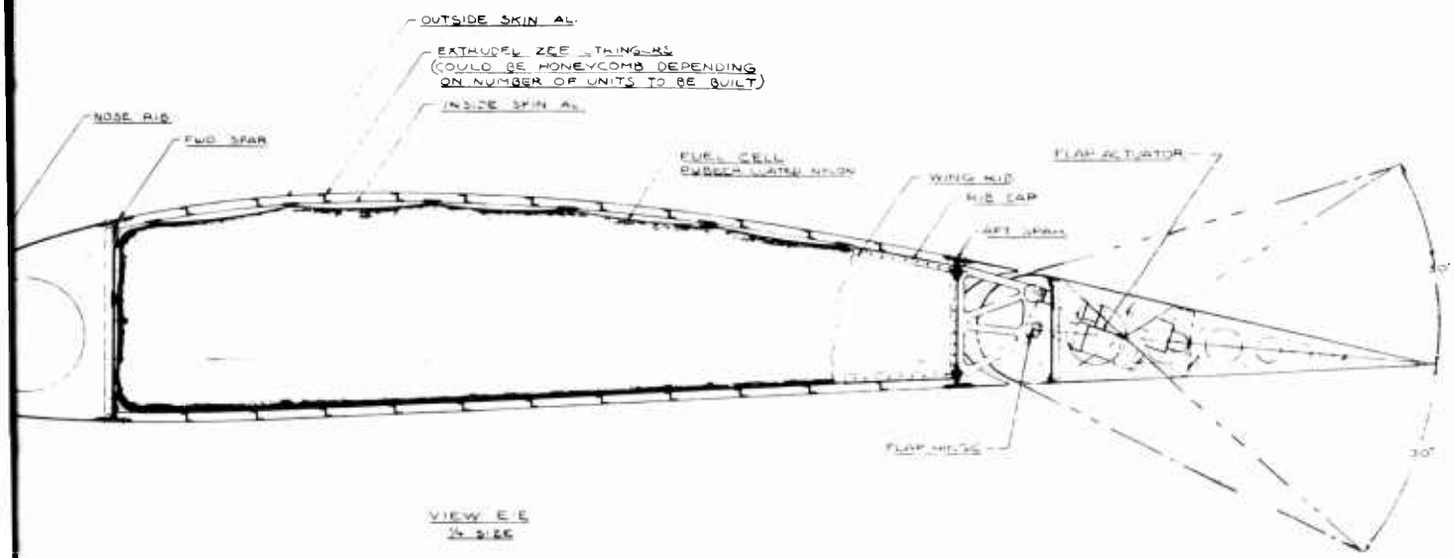

4

PRINT REDUCED
ONE-QUARTER
INDICATED SCALE

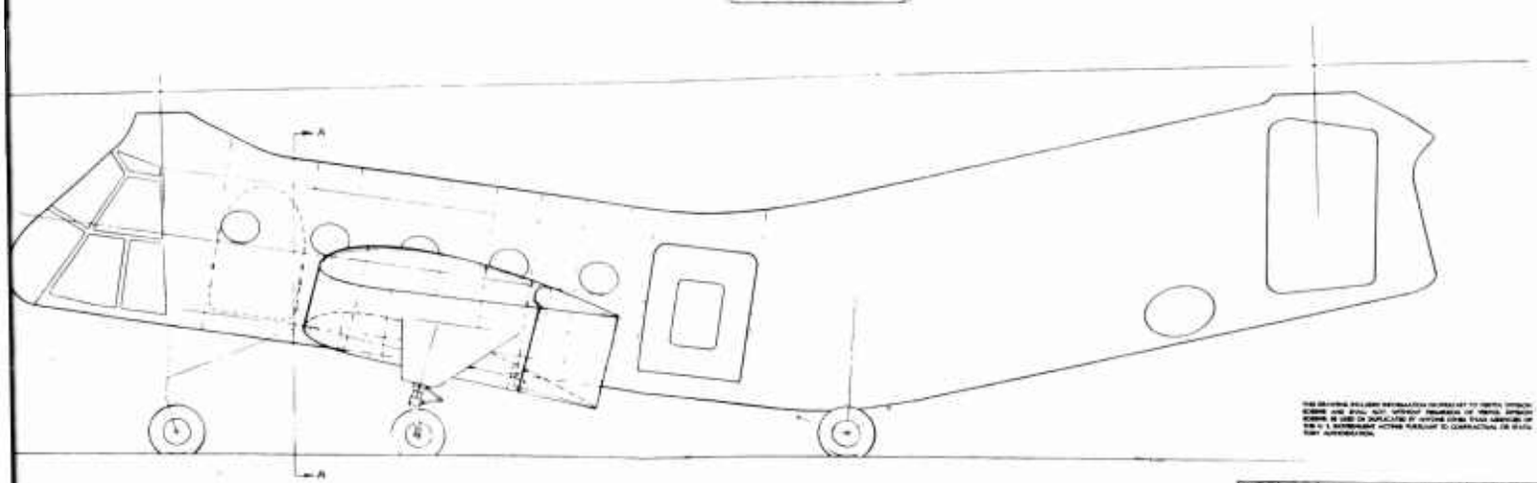

		RANGE EXTENDER STS FLOATING FUEL WING H-21	VERTOL 064101

GROUND INSTABILITY CALCULATIONS
VERTOL H-21 HELICOPTER

1. MASS PROPERTIES - WITHOUT FLOATING FUEL WING

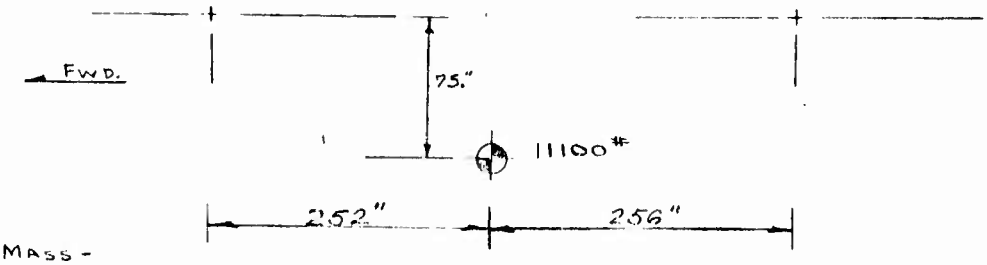

MASS -

$$M = \frac{11100^{\#}}{386.4} = 28.7 \ \# \ SEC^2/IN$$

ROLL INERTIA

$$I_x = 60000^{\#} SEC^2\text{-}IN \times \frac{11100}{13500} = 49300^{\#} SEC^2\text{-}IN.$$

2. MASS PROPERTIES - WITH FLOATING FUEL WINGS (100% FUEL)

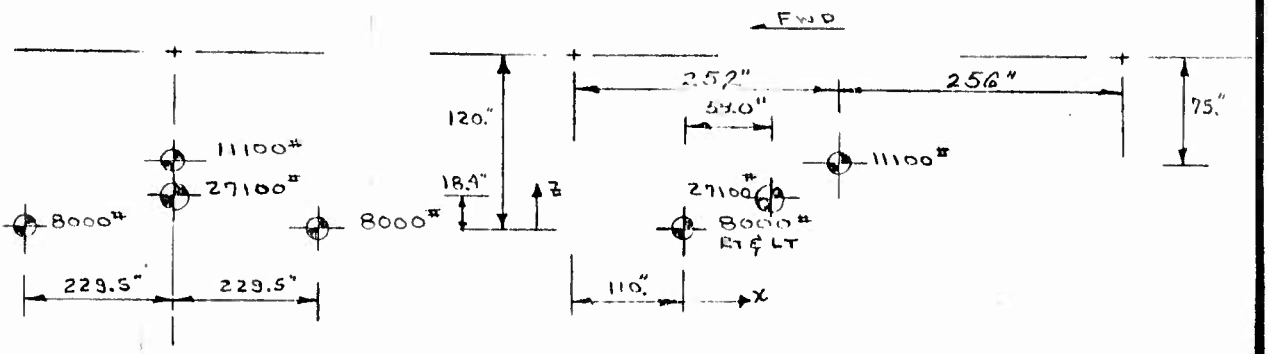

VERT. C.G. LOCATION

$$Z = \frac{11100(120-75)}{2(8000)+11100} = \frac{11100(45)}{27100} = 18.4"$$

LONG.

$$X = \frac{11100(252-110)}{27100} = \frac{11100(142)}{27100} = 58.0"$$

$$M = \frac{27100}{386.4} = 70.2 \ \# \ SEC^2/IN \qquad M_W = \frac{8000}{386} = 20.7 \ \#\text{-}SEC^2/IN$$

$$I_x = I_{O\text{-}FUS} + 2 I_{O\text{-}WING} + 28.7\left[26.6\right]^2 + 2 \times 20.7\left[(229.5)^2 + (18.4)^2\right]$$

$$I_x = 49300 + 2\times 182000 + 20300 + 41.4(52940)$$

$$I_x = 2,624,000^{\#} SEC^2\text{-}IN.$$

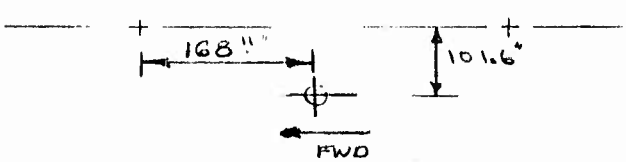

REV

3. MASS PROPERTIES - WITH FLOATING FUEL WING (0% FUEL)

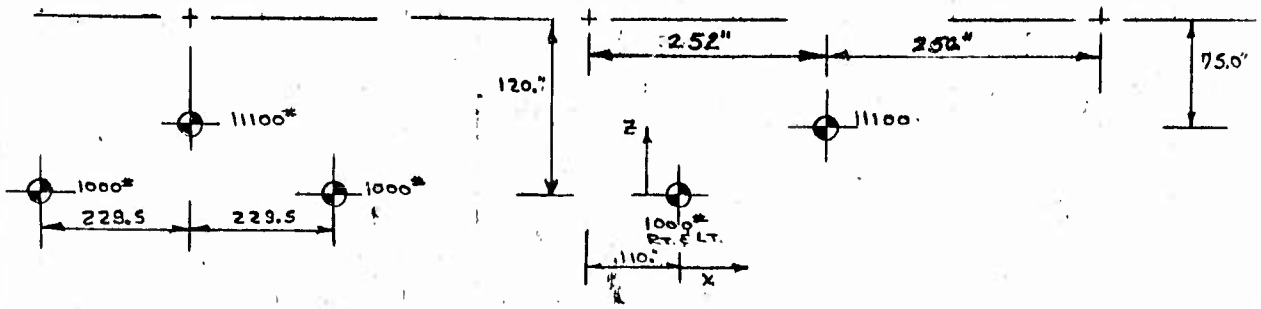

VERT. C.G. LOCATION

$$Z = \frac{11100(45)}{11100 + 2(1000)} = \frac{11100(45)}{13100} = 38.1''$$

LONG C.G. LOCATION

$$X = \frac{11100(252-110)}{13100} = \frac{11100(142)}{13100} = 121.0$$

$$M = \frac{13100}{386.4} = 33.9 \ \#\ SEC^2/IN \qquad M_W = \frac{1000}{386} = 2.58 \ \#\text{-}SEC^2/IN$$

$$I_X = I_{O\text{-}FUS} + 2I_{O\text{-}WING} + 28.7\left[6.9\right]^2 + 2 \times 2.58\left[(229.5)^2 + (38.1)^2\right]$$

$$I_X = 49300 + 2 \times 22\,800 + 1320 + 5.16(54250)$$

$$I_X = 376\,000 \ \#\ SEC^2\text{-}IN.$$

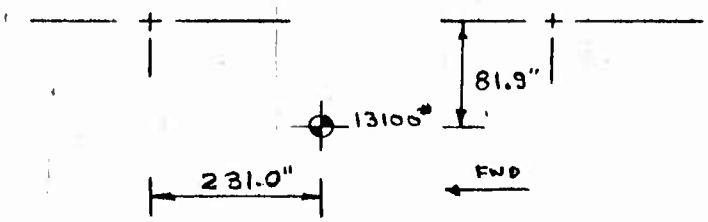

4. FLOATING FUEL WING -

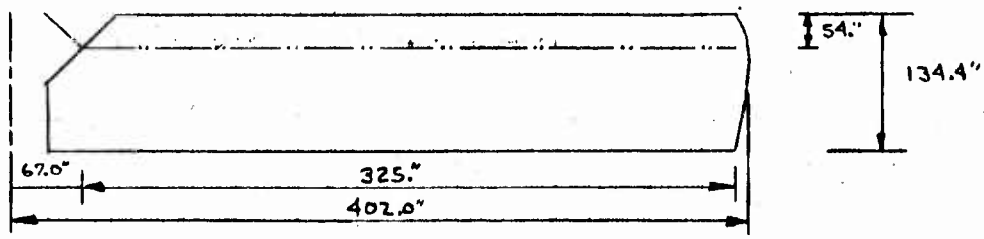

REV

F: ATING FUEL WING (CONT.)

WING MASS & STIFFNESS PROPERTIES (100% FUEL)

STATION n	MASS # SEC²/IN.	EI # IN²	LENGTH L, IN.	RADIUS ρ, IN.
1	2.892	2500×10⁶	45	303
2	2.892	2500×10⁶	45	258
3	2.892	2500×10⁶	28	213
4	0.4626	2500×10⁶	28	185
5	2.892	2500×10⁶	45	157
6	2.892	2500×10⁶	45	112
7	2.892	2500×10⁶	45	67
8	2.892	2500×10⁶	22	22

WING MASS & STIFFNESS PROPERTIES (0% FUEL)

STATION n	MASS # SEC²/IN	EI # IN²	LENGTH L, IN	RADIUS ρ IN.
1	0.362	2500×10⁶	45	303
2	0.362	2500×10⁶	45	258
3	0.362	2500×10⁶	28	213
4	0.058	2500×10⁶	28	185
5	0.362	2500	45	157
6	0.362	2500	45	112
7	0.362	2500	45	67
8	0.362	2500	22	22

FROM THE MASS AND STIFFNESS PROPERTIES TABULATED ABOVE, THE PINNED-FREE NATURAL FREQUENCIES AND MODES WERE FROM A SOLUTION PROGRAMMED ON A DIGITAL COMPUTER.

100% FUEL

1ST FLEX MODE

ω = 32.07 RAD/SEC

STA.	Z, DEFL.	Z' SLOPE
1	1.000	+.0162
2	.287	+.0150
3	-.323	+.0117
4	-.616	+.0090
5	-.823	+.0057
6	-.936	-.0008
7	-.743	-.0075
8	-.281	-.0123
PIN. (FLAP DIRECT.)	0	-.0129
PIN.	0	-.0184

0% FUEL

(OBTAINED FROM MASS RATIO)

ω = 90.8

STA.	Z, DEFL	Z', SLOPE
1	1.000	+.0162
2	.287	+.0150
3	-.323	+.0117
4	-.616	+.0090
5	-.823	+.0057
6	-.936	-.0008
7	-.743	-.0075
8	-.281	-.0123
PIN (FLAP COMPONENT)	0	-.0129
PIN	0	-.0184

REV

FLOATING FUEL WING (CONT.)

	100% FUEL	0% FUEL
HINGE SLOPE,		
	$\alpha^{(1)}_{wh} = -0.0184$	$\alpha^{(1)}_{wh} = -0.0184$
LANDING GEAR LOCATION		
	$\alpha^{(1)}_{wg} = +0.0090$	$\alpha^{(1)}_{wg} = +0.0090$
	$Z^{(1)}_{wg} = -0.616$	$Z^{(1)}_{wg} = -0.616$

5. WING AERODYNAMIC DAMPING TERMS

THESE TERMS ARE IDENTICAL TO THE TERMS CALCULATED IN THE S-58 ANALYSIS ON PAGES A-85 TO A-89.

6. WING MASS TERMS

IN THE ANALYSIS FOR THE SIKORSKY S-58 THE H-21 WING PROPERTIES WERE CONSIDERED. THEREFORE, THE WING MASS TERM CALCULATED ON PAGES A-90 TO A-91 ARE APPLICABLE, EXCEPT AS SHOWN ON THE FOLLOWING PAGE.

7. WING AERODYNAMIC SPRING

SIMILARILY TO THE ABOVE ITEMS, THE VALUES CALCULATED ON PAGE A-92 ARE APPLICABLE TO THIS ANALYSIS.

8. BLADE PROPERTIES

MASS, OUTB'D OF LAG PIN

$M_\xi = 0.4108$ #SEC²/IN

LAG HINGE OFFSET

$e_\xi = 13.9''$

ROTOR SPEED

$\Omega = 27.02$ RAD/SEC, 258 RPM

REV

WING MASS TERMS (CONT.)

100 % FUEL

$$a_3 = \sum m_i \epsilon_4 r_i + \sum m_i r_i^2$$

$$a_3 = 67(3358) + 726850$$

$$a_3 = 950\,850 \ \#\,\text{SEC}^2\text{-IN}$$

$$a_4 = \epsilon_4 \sum m_i z_{wi}^{(1)} + \sum m_i r_i z_{wi}^{(1)}$$

$$a_4 = 67(-5.534) + 0$$

$$a_4 = -370 \ \#\,\text{SEC}^2$$

0% FUEL

$$a_3 = \frac{1000}{8000} \times 950850$$

$$a_3 = 119\,000 \ \#\,\text{SEC}^2\text{-IN}$$

$$a_4 = \frac{1000}{8000} \times (-370)$$

$$a_4 = -46.2 \ \#\,\text{SEC}^2$$

REV

BLADE PROPERTIES (CONT.)

BLADE INERTIA ABOUT LAG HINGE

$I_\zeta = 5144$ #SEC²-IN

BLADE STATIC MOMENT ABOUT LAG HINGE

$\sigma_\zeta = 32.39$ #SEC²

9. WING GEAR

TIRE CONF.: ONE 24×5.5 TYPE VII TIRE PER GEAR @ PRESSURE OF 145 PSI

OLEO CONF.: IN DETERMINING PROPERTIES CONSIDER THE VERTOL YHCI-A MAIN GEAR OLEO.

A_p, PISTON AREA = 7.06 IN²

V_0, COMPRESSED VOLUME = 2 A_p

Z_s, STATIC POSITION = 2.0 IN. (100 % FUEL)

TIRE SPRING RATES —

GEAR LOADS (ASSUMED TOTAL WING WEIGHT ACTS AT THE GEAR FOR OLEO AND TIRE PROPERTIES)

% AIRBORNE	100 % FUEL	0 % FUEL
0	8000#	1000#
25	6000#	750#
50	4000#	500#
75	2000#	250#
100	0	0

TIRE SPRING RATES. VERT RATES WERE OBTAINED FROM US AIRCRAFT TIRE MANUAL AND IN THE ABSENCE OF LAT RATES THE ½ VERT RATE ASSUMPTION WAS USED

% AIRBORNE	100 % FUEL		0 % FUEL	
	VERT. RATES #/IN	LAT. RATES #/IN	VERT. RATES #/IN	LAT. RATES #/IN
0 %	5100	2550	3800	1900
25 %	4900	2450		
50 %	4500	2250	3500	1750
75 %	4100	2050		
100 %	410 (10% OF 75% AIRBORNE)	205	350 (10% OF 50% AIRBORNE)	175

REV

WING GEAR (CONT.)

OLEO PROPERTIES –
EXTENSION POSITION
FROM –
$PV = \text{CONSTANT}$
$P_1 V_1 = P_x V_x$

$$\frac{F_s}{A_p}\left[V_o + Z_s\right]A_p = \frac{F_s}{A_p}(1-h)\left[V_o + Z\right]A_p$$

WHERE V_o, TRAPPED VOLUME
F_s, STATIC LOAD
h, % AIRBORNE
A_p, PISTON AREA
Z_s, OLEO STATIC POSITION
Z, OLEO POSITION

$$F_s\left[2 + 2\right] = F_s(1-h)\left[Z+2\right]$$

$$Z = \frac{4}{1-h} - 2$$

% AIRBORNE	Z (100 % FUEL)	Z (0 % FUEL)
0	2.0	— >10
25	3.3	— >10
50	6.0	— >10
75	— >10	— >10
100	— >10	— >10

OLEO VERT SPRING RATES (FOR STROKE POSITIONS WHERE Z>10 CONSIDER A 500#/IN RATE WHICH IS OBTAINED BY USING A BOTTOMING SPRING)

$$K_s = \frac{2P_s A_p Z_s}{Z^2 + 2ZZ_s + Z_s^2} = \frac{4F_s}{Z^2 + 4Z + 4}$$

$Z = 2.0$ $\quad K = \frac{4 \times 8000}{4+8+4} = \frac{8000 \times 4}{16} = 2000\#/\text{IN.}$

$Z = 3.3$ $\quad K = \frac{32000}{10.9 + 13.2 + 4} = \frac{32000}{28.1} = 1140\#/\text{IN.}$

$Z = 6.0$ $\quad K = \frac{32000}{36+24+4} = \frac{32000}{64} = 500\#/\text{IN.}$

REV

WING GEAR (CONT.)

OLEO SPRING RATES

% AIRBORNE	0% FUEL		100 % FUEL	
	VERT. RATE #/IN	LAT. RATE #/IN	VERT. RATE #/IN	LAT RATE #/IN.
0	500	12200	2000	3200
25	500	9900	1140	3200
50	500	8000	500	3200
75	500	3200	500	3200
100	500	3200	500	3200

LAT. OLEO RATES REPRESENT AN EQUIVALENT SPRING AT THE GROUND LINE OBTAINED FROM YHC-1A CALCULATIONS

EQUIVALENT LATERAL GEAR STIFFNESS

(LATERAL GEAR AND LATERAL TIRE IN SERIES)

% AIRBORNE	WING (100 % FUEL) #/IN	WING (0% FUEL) #/IN.
0	$K = \frac{(12200)(2550)}{14750} = 2110$	$K = \frac{(3200)(1900)}{5100} = 1190$
25	$K = \frac{(9900)(2450)}{12350} = 1970$	
50	$K = \frac{(8000)(2250)}{10250} = 1750$	$K = \frac{(3200)(1750)}{4950} = 1130$
75	$K = \frac{(3200)(2050)}{5250} = 1250$	
100	$K = \frac{(3200)(205)}{3405} = 193$	$K = \frac{(3200)(175)}{3375} = 165$

REV

10. MAIN GEAR

(ASSUMED ONLY THE FUSELAGE WEIGHT IS SUPPORTED BY THE MAIN GEAR)

TIRE CONF.: ONE 24 × 7.7 TIRE PER GEAR @ 115 PSI

OLEO CONF.: STANDARD H-21 OLEO STRUT

A_p, PISTON AREA = 11.03 IN²

V_o, COMPRESSED VOLUME = 4.69 IN³

Z_s, STATIC POSITION = 1.16 IN (11100 G.W.)

STATIC LOAD = STATIC LOAD @ 13500# × $\frac{11100}{13500}$

$$F_s = \frac{11100}{13500} \times 6279 = 5160\#$$

FROM PV = CONSTANT

$$\frac{F_s}{A_p}\left[V_o + Z_s A_p\right] = \frac{11100}{A_p} \times \frac{1}{2}(1-\eta)\left[V_o + Z A_p\right]$$

WHERE, Z, OLEO POSITION

η, PERCENT AIRBORNE

$$\frac{5160}{11.03}\left[4.69 + 1.16 \times 11.03\right] = \frac{5550}{11.03}(1-\eta)\left[4.69 + 11.03 Z\right]$$

$$5160\left[17.49\right] \times \frac{1}{5550(1-\eta)} - 4.69 = 11.03 Z$$

$$Z = \frac{1.47}{1-\eta} - 0.42$$

% AIRBORNE	Z, STROKE POSITION
0	1.16
25	1.54
50	2.52
75	5.46
85	9.72 (FULLY EXTENDED)

OLEO SPRING RATES

$$P_s V_s = \frac{F}{A_p}\left[V_o + Z A_p\right]$$ WHERE F, FORCE ON PISTON

$$F = \frac{P_s V_s A_p}{V_o + Z A_p}$$

$$K = \frac{\partial F}{\partial Z} = -\frac{P_s V_s A_p^2}{(V_o + Z A_p)^2} = -\frac{F_s A_p V_s}{(V_o + Z A_p)^2} = -\frac{F_s A_p (V_o + Z_s A_p)}{(V_o + Z A_p)^2}$$

$$K = -\frac{17.49(5160)(11.03)}{(4.69 + 11.03 Z)^2} = \frac{996000}{(4.69 + 11.03 Z)^2}$$

$Z = 1.16$ $\qquad K = \frac{996000}{306} = 3260$ #/IN.

REV

MAIN GEAR (CONT.)

OLEO SPRING RATES

$Z = 1.54$ $\quad K = \frac{996000}{473} = 2100\,\#/IN$

$Z = 2.52$ $\quad K = \frac{996000}{(32.49)^2} = 945\,\#/IN$

$Z = 5.46$ $\quad K = \frac{996000}{(65.0)^2} = 236\,\#/IN$

$Z = 9.72$ $\quad K = \frac{996000}{(112)^2} = 79\,\#/IN$

TIRES SPRING RATES

RADIAL LOADS –

% AIRBORNE	RADIAL LOAD PER TIRE
0%	5160#
25%	$\frac{1}{2} \times 11100 \times (.75) = 4160\#$
50%	$\frac{1}{2} \times 11100 \times (.50) = 2780\#$
75%	$\frac{1}{2} \times 11100 \times (.25) = 1390\#$

TIRE RATES (24×7.7)

% AIRBORNE	VERT. RATE	LAT. RATE ($\frac{1}{2}$ VERT.)
0%	3950 #/IN	1975 #/IN
25%	3750 #/IN	1875 #/IN
50%	3400 #/IN	1700 #/IN
75%	3150 #/IN	1575 #/IN
100%	315 #/IN (10% OF 75% AIRBORNE)	158 #/IN.

REV

IBM PROGRAM No. 169 MECHANICAL INSTABILITY ANALYSIS OF VERTOL H-21 HELICOPTER RANGE EXTENSION WITHOUT FLOATING WING FUEL TANKS.

BASIC DATA SHEET 1 OF 2

			1	2	3	4	5
% AIRBORNE, FUSELAGE →			0	25	50	75	100
% AIRBORNE, WINGS →							
FORWARD SPEED, KNOTS →			0	0	0	0	0
% FUEL IN WINGS →							
a_1		101	0				
a_2		102	0				
a_3		103	0				
a_4		104	0				
a_5		105	0				
a_6		106	0				
a_7		107	0				
a_8		108	0				
a_9		109	0				
a_{10}		110	0				
M	LB SEC²/IN	111	28.7				
I_x	LB SEC² IN	112	49300				
K_s	LB/IN	113	3260	2100	945	236	79
C_s	LB/IN/SEC	114	475				
K_{ey}	LB/IN	115	1975	1875	1700	1575	158
K_{ez}	LB/IN	116	3950	3750	3400	3150	315
k_{ey}	LB/IN	117	0				
k_{ez}	LB/IN	118	0				
ℓ_0	IN	119	56.0				
ℓ_1	IN	120	0				
h_0	IN	121	15.0	15.3	16.3	19.3	23.5
h_1	IN	122	100.0	100.3	101.3	104.3	108.5
ε_0	IN	123	72.0				
ε_1	IN	124	80.0				
R_F	IN	125	75.0				
R_A	IN	126	75.0				
T_F	LB	127	0	1388	2775	4163	5550
T_A	LB	128	0	1388	2775	4163	5550
K_{SW}	LB/IN	129	1.0				
C_{SW}	LB/IN/SEC	130	0				

REV

#3868

IBM PROGRAM No. 169 MECHANICAL INSTABILITY ANALYSIS OF VERTOL H-21 HELICOPTER RANGE EXTENSION WITHOUT FLOATING WING FUEL TANKS

BASIC DATA SHEET 2 OF 2

			1	2	3	4	5
% AIRBORNE, FUSELAGE →			0	25	50	75	100
% AIRBORNE, WINGS →							
FORWARD SPEED, KNOTS →			0	0	0	0	0
% FUEL IN WINGS →							
$K_{t_{XH}}$	LB/IN	131	1.0				
$K_{t_{ZH}}$	LB/IN	132	1.0				
K_{XW}	LB IN/RAD	133	0				
C_{XW}	LB IN/RAD/SEC	134	0				
ℓ_2	IN	135	94.0	94.3	95.3	98.3	102.5
ℓ_3	IN	136	46.0	46.3	47.3	50.3	54.5
ε_2	IN	137	252.				
ε_3	IN	138	132.				
ε_4	IN	139	67.				
γ_0	DEG	140	45				
$\cos\gamma_0$		141	0.7071				
$\sin\gamma_0$		142	0.7071				
V	IN/SEC	143	0				
Ω	RAD/SEC	144	2.02				
ω_1	RAD/SEC	145	32.07				
$\alpha^{(1)}_{WR}$		146	−0.0194				
$\alpha^{(1)}_{Wq}$		147	+0.00903				
Z_{Wq}		148	−0.616				
e_f	IN	149	13.9				
m_f	LB SEC²/IN	150	0.4108				
σ_f	LB SEC²	151	32.39				
I_f	LB SEC² IN	152	5144				
k_f	LB IN/RAD	153	0				
P	LB	154	600				
c	LB/IN/SEC	155	170				
r_0	IN	156	5.1				
ζ_a	RAD	157	0.08727				
ω	RAD/SEC	158	1				
$\Delta\omega$	RAD/SEC	159	1				
ω_L	RAD/SEC	160	50				
No.		161	1				
r = 1 OR 2		748	2				
n = 3, 4 OR 5		798	3				

REV

#3868

IBM PROGRAM NO. 169 MECHANICAL INSTABILITY ANALYSIS OF VERTOL H-21 HELICOPTER RANGE EXTENSION USING FLOATING WING FUEL TANKS

BASIC DATA SHEET 1 OF 2

			6	7	8	9	10
% AIRBORNE, FUSELAGE →			0	25	50	75	100
% AIRBORNE, WINGS →			0	0	0	0	0
FORWARD SPEED, KNOTS →			0	0	0	0	0
% FUEL IN WINGS →			100	100	100	100	100
a_1		101	726850				
a_2		102	9.325				
a_3		103	950 850				
a_4		104	-370.				
a_5		105	0				
a_6		106	0				
a_7		107	0				
a_8		108	0				
a_9		109	0				
a_{10}		110	0				
M	LB SEC²/IN	111	70.2				
I_α	LB SEC² IN	112	2 624 000				
K_s	LB/IN	113	3260	2100	945	236	79
C_s	LB/(IN/SEC)	114	475				
K_{t_y}	LB/IN	115	1975	1875	1700	1575	158
K_{t_z}	LB/IN	116	3950	3750	3400	3150	315
R_{t_y}	LB/IN	117	0				
R_{t_z}	LB/IN	118	0				
ℓ_o	IN	119	56.0				
ℓ	IN	120	0				
R_o	IN	121	15.0	15.3	16.3	19.3	23.5
R_1	IN	122	74.0	74.3	75.3	78.3	82.5
ε_o	IN	123	72.0				
ε_1	IN	124	80.0				
R_E	IN	125	101.6				
R_A	IN	126	101.6				
T_F	LB	127	0	1388	2775	4163	5550
T_A	LB	128	0	1388	2775	4163	5550
K_{SW}	LB/IN	129	2000				
C_{SW}	LB/(IN/SEC)	130	400				

REV

#3868

IBM PROGRAM No. 169 MECHANICAL INSTABILITY ANALYSIS OF VERTOL H-21 HELICOPTER RANGE EXTENSION USING FLOATING WING FUEL TANKS

BASIC DATA SHEET 2 OF 2

			6	7	8	9	10
% AIRBORNE, FUSELAGE →			0	25	50	75	100
% AIRBORNE, WINGS →			0	0	0	0	0
FORWARD SPEED, KNOTS →			0	0	0	0	0
% FUEL IN WINGS →			100	100	100	100	100
$K_{z_{SW}}$	LB/IN	131	2110	2110	2110	2110	2110
$K_{z_{FW}}$	LB/IN	132	5100	5100	5100	5100	5100
$K_{\alpha_{SW}}$	LB IN/RAD	133	0				
$C_{\alpha_{SW}}$	LB IN/RAD/SEC	134	0				
R_2	IN	135	68.0	68.3	69.3	72.3	104.0
R_3	IN	136	46.0	46.3	47.3	50.3	88.0
ℓ_2	IN	137	252.				
ℓ_3	IN	138	132.				
ℓ_4	IN	139	67.				
γ_0	DEG	140	45.				
$\cos\gamma_0$		141	0.7071				
$\sin\gamma_0$		142	0.7071				
V	IN/SEC	143	0				
Ω	RAD/SEC	144	27.02				
ω_1	RAD/SEC	145	32.07				
$\alpha^{(1)}_{w_R}$		146	-0.0184				
$\alpha^{(1)}_{w_\theta}$		147	+0.00903				
$z^{(1)}_{w_\theta}$		148	-0.616				
e_f	IN	149	13.9				
m_f	LB SEC²/IN	150	0.4108				
δ_f	LB SEC²	151	32.39				
I_f	LB SEC² IN	152	5144				
k_f	LB IN/RAD	153	0				
P	LB	154	600				
C	LB/IN/SEC	155	170				
r_0	IN	156	5.1				
β_0	RAD	157	0.08727				
ω	RAD/SEC	158	1				
$\Delta\omega$	RAD/SEC	159	1				
ω_L	RAD/SEC	160	50				
No.		161	1				
n = 1 OR 2		748	2				
n = 3, 4 OR 5		798	3				

REV

#3868

IBM PROGRAM No. 169 MECHANICAL INSTABILITY ANALYSIS OF VERTOL H-21 HELICOPTER RANGE EXTENSION USING FLOATING WING FUEL TANKS

BASIC DATA SHEET 1 OF 2

			11	12	13	14	15
% AIRBORNE, FUSELAGE →			100	100	100	100	100
% AIRBORNE, WINGS →			0	25	50	75	100
FORWARD SPEED, KNOTS →			0	20	40	60	80
% FUEL IN WINGS →			100	100	100	100	100
a_1		101	726850				
a_2		102	9.925				
a_3		103	950850				
a_4		104	-370.				
a_5		105	0	395 000	790 000	1 185 000	1 580 000
a_6		106	0	205 000	411 000	617 000	821 000
a_7		107	0	2.79	5.55	8.39	11.15
a_8		108	0	281 000	562 000	845 000	1 125 000
a_9		109	0	-136.5	-274.0	-411.	-546.0
a_{10}		110	0	-8.98	-17.9	-27.0	-35.9
M	LB SEC²/IN	111	70.2				
I_x	LB SEC² IN	112	2 624 000				
K_s	LB/IN	113	79				
C_s	LB/(IN/SEC)	114	475				
K_{ty}	LB/IN	115	158				
K_{tz}	LB/IN	116	315				
R_{ty}	LB/IN	117	0				
R_{tz}	LB/IN	118	0				
ℓ_0	IN	119	56.0				
ℓ	IN	120	0				
R_0	IN	121	23.5	23.5	23.5	23.5	23.5
R_1	IN	122	82.5				
ℓ_0	IN	123	72.0				
ℓ_1	IN	124	80.0				
R_F	IN	125	101.6				
R_A	IN	126	101.6				
T_F	LB	127	5550				
T_A	LB	128	5550				
K_{SW}	LB/IN	129	2000	1140	500	500	500
C_{SW}	LB/(IN/SEC)	130	400				

REV

#3868

IBM PROGRAM No. 169 MECHANICAL INSTABILITY ANALYSIS OF VERTOL H-21 HELICOPTER RANGE EXTENSION USING FLOATING WING FUEL TANKS

BASIC DATA SHEET 2 OF 2

			11	12	13	14	15
% AIRBORNE, FUSELAGE →			100	100	100	100	100
% AIRBORNE, WINGS →			0	25	50	75	100
FORWARD SPEED, KNOTS →			0	20	40	60	80
% FUEL IN WINGS →			100	100	100	100	100
K_{tzN}	LB/IN	131	2110	1970	1750	1250	193
K_{tzW}	LB/IN	132	5100	4900	4500	4100	410
$K_{\alpha W}$	LB IN/RAD	133	0	193 000	772 000	1 740 000	3 090 000
$C_{\alpha W}$	LB IN/RAD/SEC	134	0				
R_2	IN	135	104.0				
R_3	IN	136	88.0				
ε_2	IN	137	252.				
ε_3	IN	138	132.				
ε_4	IN	139	67.				
γ_0	DEG	140	45				
$\cos\gamma_0$		141	0.7071				
$\sin\gamma_0$		142	0.7071				
V	IN/SEC	143	0	406	812	1218	1624
Ω	RAD/SEC	144	27.02				
ω_1	RAD/SEC	145	32.07				
$\alpha^{(1)}_{wR}$		146	-0.0184				
$\alpha^{(1)}_{wq}$		147	+0.00903				
$Z^{(1)}_{wq}$		148	-0.616				
e_f	IN	149	13.3				
m_f	LB SEC²/IN	150	0.4108				
δ_f	LB SEC²	151	32.39				
I_f	LB SEC² IN	152	5144				
k_f	LB IN/RAD	153	0				
P	LB	154	600				
C	LB/IN/SEC	155	170				
r_0	IN	156	5.1				
β_0	RAD	157	0.08727				
ω	RAD/SEC	158	1				
$\Delta\omega$	RAD/SEC	159	1				
ω_L	RAD/SEC	160	50				
No.		161	1				
r = 1 OR 2		748	2				
n = 3, 4 OR 5		798	3				

REV

#3868

IBM PROGRAM NO. 169 MECHANICAL INSTABILITY ANALYSIS OF VERTOL H-21 HELICOPTER RANGE EXTENSION USING FLOATING WING FUEL TANKS

BASIC DATA SHEET 1 OF 2

		16	17	18	19	20
% AIRBORNE, FUSELAGE →		100	100	100	50	0
% AIRBORNE, WINGS →		100	50	0	0	0
FORWARD SPEED, KNOTS →		80	40	0	0	0
% FUEL IN WINGS →		0	0	0	0	0
a_1	101	90855				
a_2	102	1.2405				
a_3	103	119 000				
a_4	104	−46.2				
a_5	105	1 580 000	790 000	0		
a_6	106	821 000	411 000	0		
a_7	107	11.15	5.55	0		
a_8	108	1125 000	562 000	0		
a_9	109	−546.0	−274.0	0		
a_{10}	110	−35.9	−17.9	0		
M LB SEC²/IN	111	33.9				
I_x LB SEC² IN	112	376 000				
K_s LB/IN	113	79	79	79	945	3260
C_s LB/IN/SEC	114	475				
K_{ey} LB/IN	115	158	158	158	1700	1975
K_{ex} LB/IN	116	315	315	315	3400	3950
R_{ey} LB/IN	117	0				
R_{ex} LB/IN	118	0				
ℓ_0 IN	119	56.0				
R IN	120	0				
R_0 IN	121	23.5	23.5	23.5	16.3	15.0
R_1 IN	122	102.5	→	→	95.3	94.0
ℓ_0 IN	123	72.0				
ℓ_1 IN	124	80.0				
R_E IN	125	81.9				
R_A IN	126	81.9				
T_E LB	127	5550	5550	5550	2775	0
T_A LB	128	5550	5550	5550	2775	0
K_{SW} LB/IN	129	500				
C_{SW} LB/IN/SEC	130	400				

REV

#3868

IBM PROGRAM No. 169 MECHANICAL INSTABILITY ANALYSIS OF VERTOL H-21 HELICOPTER RANGE EXTENSION USING FLOATING WING FUEL TANKS

BASIC DATA SHEET 2 OF 2

			16	17	18	19	20
% AIRBORNE, FUSELAGE →			100	100	100	50	0
% AIRBORNE, WINGS →			100	50	0	0	0
FORWARD SPEED, KNOTS →			80	40	0	0	0
% FUEL IN WINGS →			0	0	0	0	0
K_{FW}	LB/IN	131	165	1130	1190	1190	1190
K_{TW}	LB/IN	132	350	3500	3800	3800	3800
$K_{\alpha W}$	LB IN/RAD	133	3 090 000	772 000	0	0	0
$C_{\alpha W}$	LB IN/ RAD/SEC	134	0				
h_2	IN	135	124.0	124.0	124.0	83.3	88.0
h_3	IN	136	88.0	88.0	88.0	47.3	46.0
ℓ_2	IN	137	252				
ℓ_3	IN	138	132.				
ℓ_4	IN	139	67.				
γ_0	DEG	140	45.				
$\cos \gamma_0$		141	0.7071				
$\sin \gamma_0$		142	0.7071				
V	IN/SEC	143	1624	812	0	0	0
Ω	RAD/SEC	144	27.02				
ω_1	RAD/SEC	145	90.8				
$\alpha^{(1)}_{WR}$		146	-0.0184				
$\alpha^{(1)}_{Wq}$		147	+0.00903				
$Z^{(1)}_{Wq}$		148	-0.616				
e_f	IN	149	13.3				
m_f	LB SEC²/IN	150	0.4108				
σ_f	LB SEC²	151	32.39				
I_f	LB SEC² IN	152	5144				
k_f	LB IN/RAD	153	0				
P	LB	154	600				
C	LB/ IN/SEC	155	170				
r_0	IN	156	5.1				
ξ_0	RAD	157	0.08727				
ω	RAD/SEC	158	1				
$\Delta\omega$	RAD/SEC	159	1				
ω_L	RAD/SEC	160	50				
No.		161	1				
r = 1 OR 2		748	2				
n = 3, 4 OR 5		798	3				

REV

#3868

APPENDIX A

5. Ground Instability Calculations

VERTOL HUP-2 Helicopter

REV

THIS DRAWING INCLUDES INFORMATION PROPRIETARY TO VOUGHT DIVISION [illegible] AND SHALL NOT, WITHOUT PERMISSION OF VOUGHT DIVISION [illegible], BE USED OR DUPLICATED BY ANYONE OTHER THAN AGENCIES OF THE U. S. GOVERNMENT ACTING PURSUANT TO CONTRACTUAL OR STATUTORY AUTHORIZATION.

1

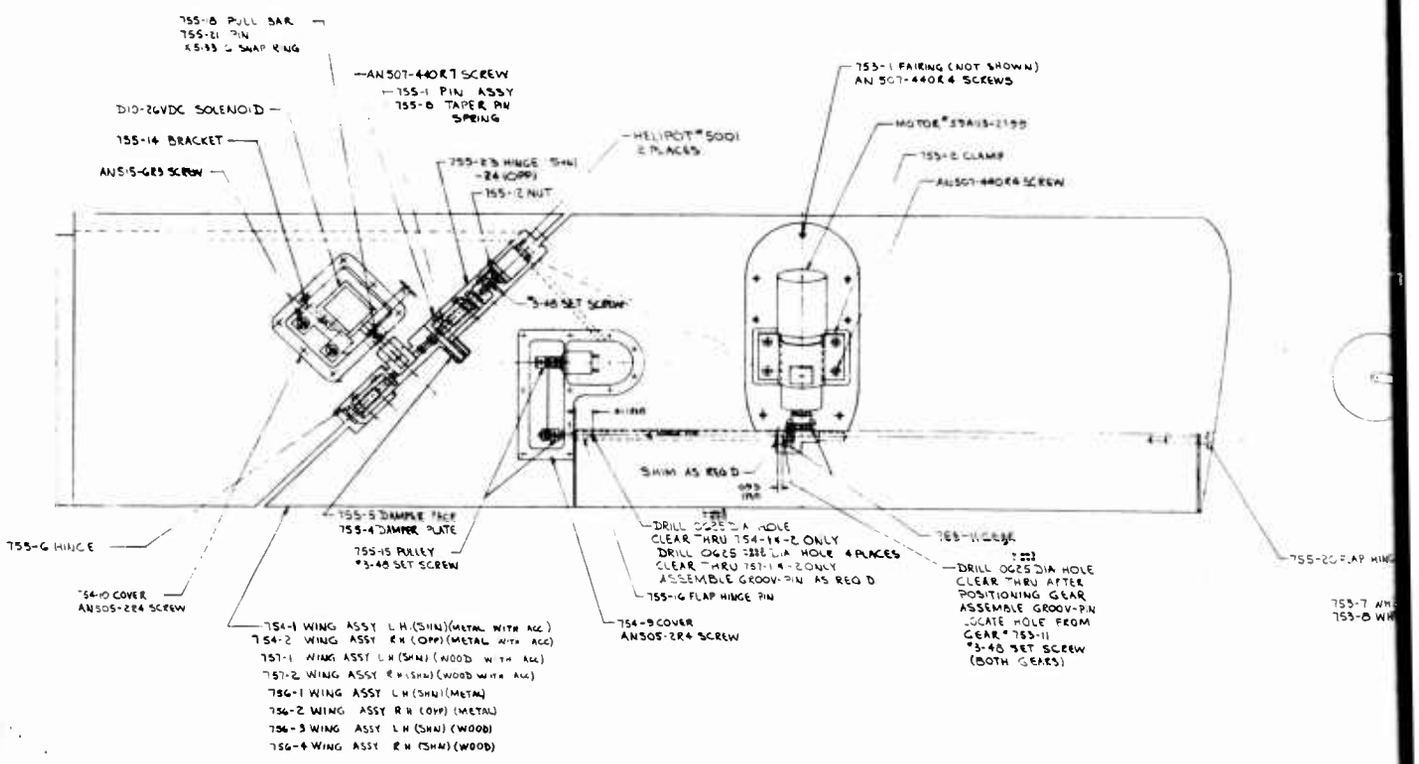

VIEW SHOWING UNDERSIDE
OF WING ASSY

2

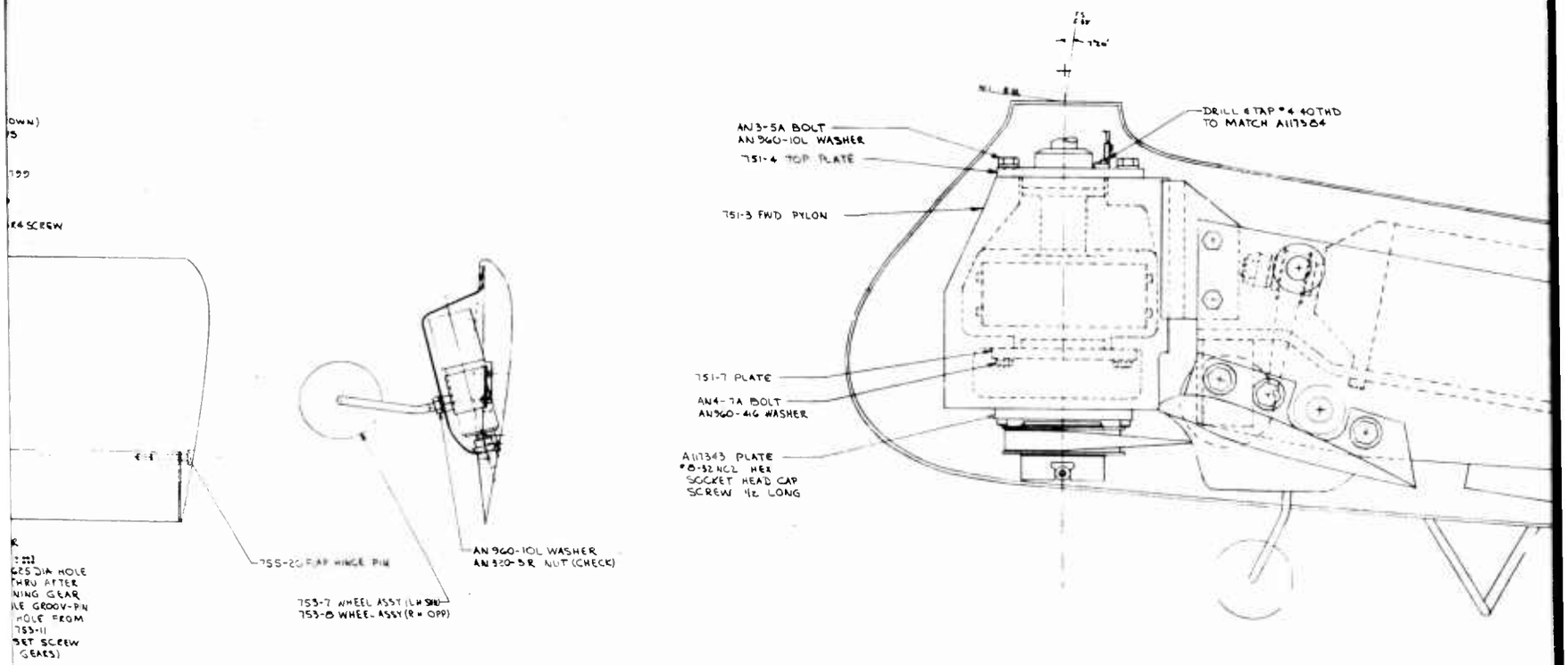
AN 3-5A BOLT
AN 960-10L WASHER
751-4 TOP PLATE
751-3 FWD PYLON
DRILL & TAP #4 40 THD
TO MATCH A117304
751-7 PLATE
AN4-7A BOLT
AN960-416 WASHER
A117343 PLATE
#8-32 NC2 HEX
SOCKET HEAD CAP
SCREW 1/2 LONG
755-20 FLAP HINGE PIN
AN 960-10L WASHER
AN 320-3R NUT (CHECK)
753-7 WHEEL ASSY (LH SH)
753-8 WHEEL ASSY (RH OPP)

3

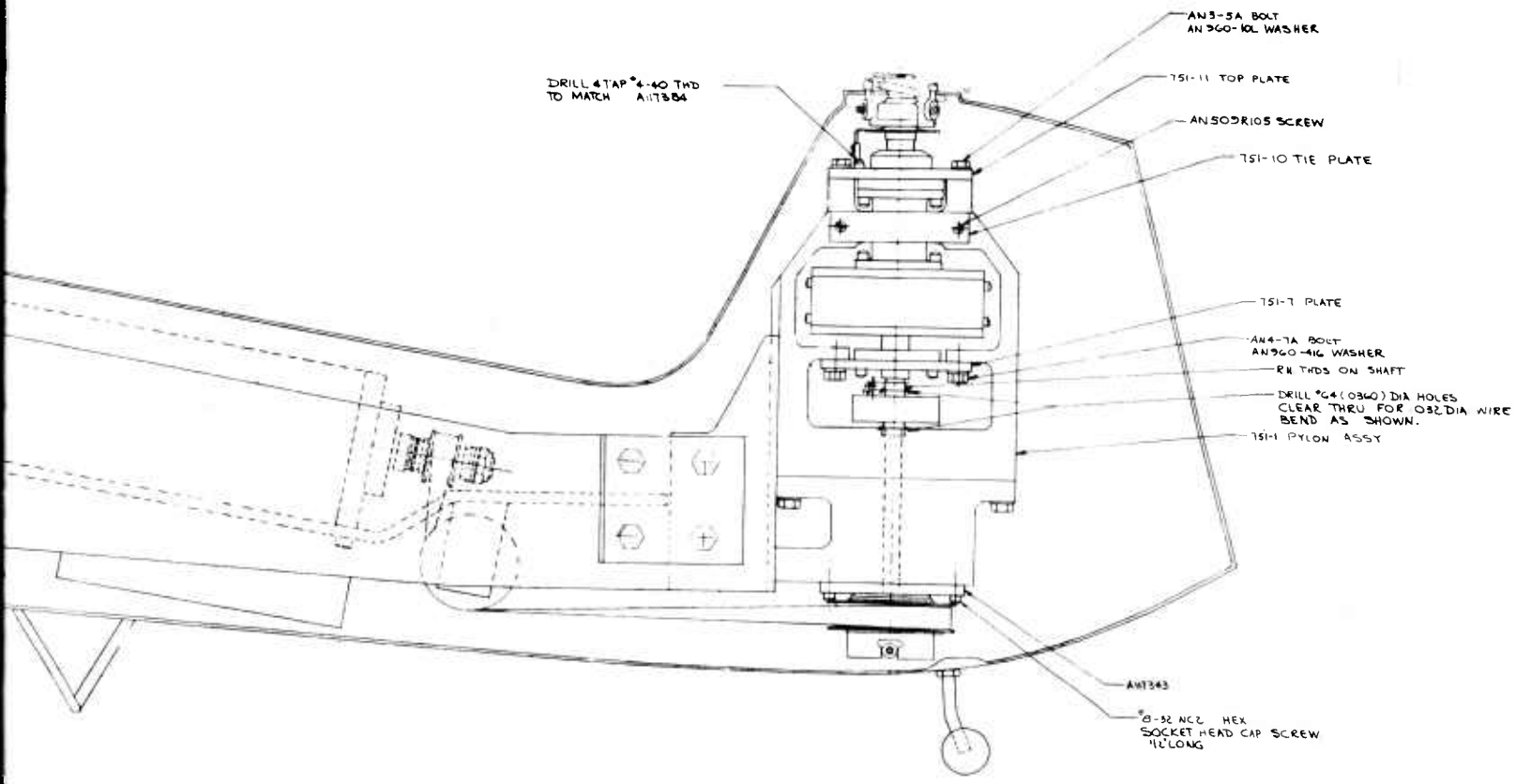
AN3-5A BOLT
AN960-10L WASHER
DRILL & TAP #4-40 THD
TO MATCH A117384
751-11 TOP PLATE
AN509R105 SCREW
751-10 TIE PLATE
751-7 PLATE
AN4-7A BOLT
AN960-416 WASHER
RH THDS ON SHAFT
DRILL #64 (.0360) DIA HOLES
CLEAR THRU FOR .032 DIA WIRE
BEND AS SHOWN.
751-1 PYLON ASSY
A117343
#8-32 NC2 HEX
SOCKET HEAD CAP SCREW
1 1/2" LONG

4

HOLES
.032 DIA WIRE

NOTES
1. FOUR SETS OF WINGS
   a. 1 SET METAL WITH ACTUATED FLAPS
   b. 1 SET WOOD WITH ACTUATED FLAPS
   c. 1 SET METAL WITH MANUAL FLAPS
   d. 1 SET WOOD WITH MANUAL FLAPS

	-5	-4	-3	-2	-1	ASSGN	PART NO.	DESCRIPTION	STOCK SIZE	MAT'L	MAT'L SPEC	U/S WEIGHT	FINISH	CALC UNIT WT	ACT UNIT WT	REMS

LIST OF MATERIAL

VERTOL FINISH SPEC FS

FINISH	MIL-SPEC PAINT	GOVT SPEC	MIL-SPEC PAINT	FINISH	MIL-SPEC PAINT	GOVT SPEC	MIL-SPEC PAINT
ALODINE	1	MIL-C-5541		ZINC CHROMATE PRIMER		MIL-P-8585	6-7
CORR PLATE	2	QQ-P-416	3-1	TWING ZINC CHR PRIMER	10	MIL-C-8514	6-7
TYPE I ANODIC NCRM	3	MIL-A-8625	5-1	PRIMER & TWING PRIMER	11	MIL-P-8585	6-7
TYPE II ANODIC	4B	MIL-A-8625	5-5	WASH PRIMER	12A	MIL-C-8514	MIL-L-7

FOR VERTOL AND PRIVATE VENDOR USE ONLY

ASSGN	PART NUMBER	NEXT ASSGN	REQ ASSGN

UNLESS OTHERWISE SPECIFIED DIMENSIONS ARE IN INCHES
TOLERANCES ON
FRACT ± DECIMALS ± ANGLES ±
.X ± .XX ± .XXX ± F.S.
SURF FINISH
MAT'L GOV SPEC VERTOL SPEC
ASSG .XX ± .0001 .X ± .4
ASSG .XXX ± .0005 .X ± .5
ASSG CAST .XX ± .1000

DRAWN	
CHECKED	
ENGRG	
PROJ ENG	
QUAL ENGR	PROJ ENGR
PROD	QAR

EXTENDED RANGE
WIND TUNNEL
MODEL FINAL
ASSY

SCALE F.S. | REF

VERTOL
BOEING
MORTON, PENNSYLVANIA

DWG NO. 759 | REV

SHEET

APPENDIX A-5

H-25 HELICOPTER

GROUND INSTABILITY CALCULATIONS

1. Mass Properties - without Wings

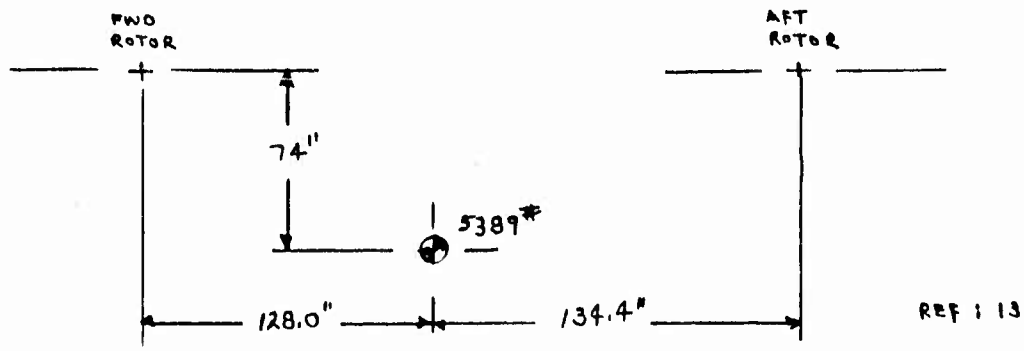

Roll Inertia - From Report 18-D-05, "Theoretical Analyses of HUP-2 Ground Resonance", page 2.007, reference 12, $I_\alpha = 12 \times 971 = 11{,}640$ lb.-sec^2 in. for a gross weight of $178.1 \times 32 = 5740$ lb. The gross weight of the helicopter for the present mission is taken from reference 13 for a fully fueled helicopter without cargo as 5389 lb. Ratioing the inertias gives

$$I_\alpha = \frac{5389}{5740} \quad 11{,}640 = 10{,}953 \text{ lb. sec}^2 \text{ in.}$$

Mass - $$M = \frac{5389}{386.4} = 13.95 \text{ lb. sec}^2/\text{in.}$$

The empty wings are estimated to weigh 375 lb. each.

2. Mass Properties - with Wings, 0% Fuel

The vertical C.G. of the wing fuselage assembly is

$$Z = \frac{5389 \times 24}{2\ (375) + 5389} = 21"$$

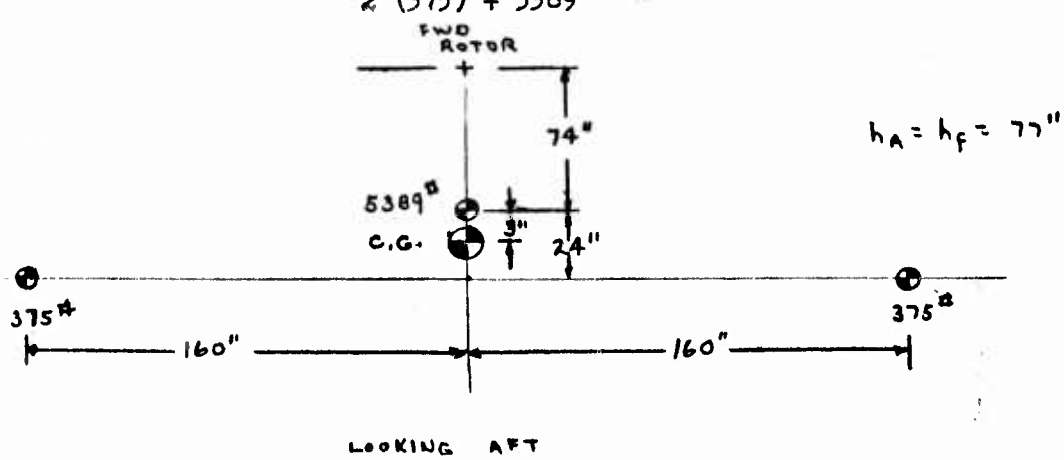

REV

The longitudinal C.G. of the wing fuselage assembly is

$$X = \frac{5389 \times 80}{5389 + 750} = 70.2''$$

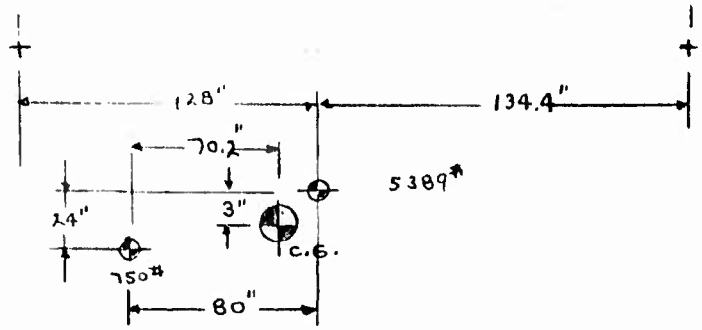

$$M = \frac{5389 + 750}{386.4} = 15.89 \text{ lb. sec}^2/\text{in.}$$

$$M_{wing} = \frac{375}{386} = 0.97 \text{ lb. sec}^2/\text{in.}$$

Roll inertia of helicopter and wings about C.G. (locked hinge)

Wing inertia about its C.G.

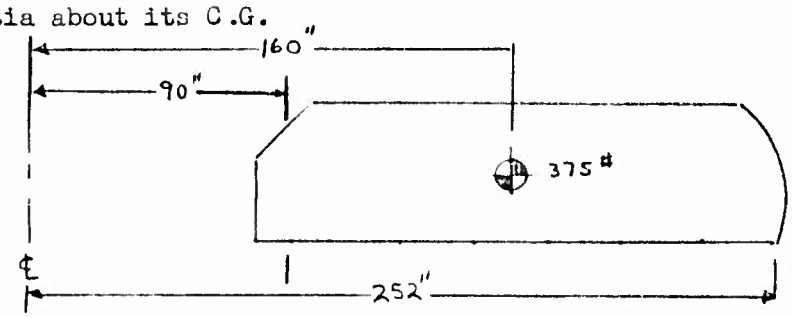

$$I = \frac{1}{12} \frac{375}{386} (252-90)^2$$

$$I = 2133 \text{ lb. sec}^2 \text{ in.}$$

$$I_{\alpha} = 13.95 \times (3)^2 + 10953 + 2\left[0.97\left\{(160)^2 + (21)^2\right\} + 2133\right]$$

$$= 125.55 + 10953 + 55{,}320 = 66{,}398 \text{ lb. sec}^2 \text{ in.}$$

REV

3. Mass Properties - with Wings, 100% Fuel

Each wing carries 1125 lb. of fuel for a total loaded weight of 1125 + 375 = 1500 lb. The vertical C.G. location of the wing fuselage assembly is now

$$z = \frac{5389 \times 24}{2(1500) + 5389} = 15.4''$$

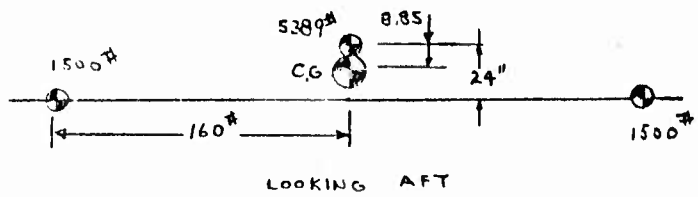

and the longitudinal C.G. location is

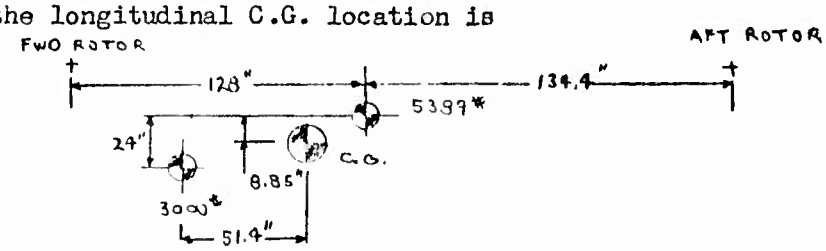

combined C.G. distance from wing hinge $= \frac{5389 \times 80}{5389 + 3000} = 51.4''$

$$M = \frac{5389 + 3000}{386.4} = 21.71 \text{ lb.-sec}^2/\text{in.}$$

$$M_{wing} = \frac{1500}{386} = 3.88 \quad \text{lb-sec}^2/\text{in}$$

Roll inertia of helicopter and wing about C.G.

Wing inertia about hinge - E.A. intersection

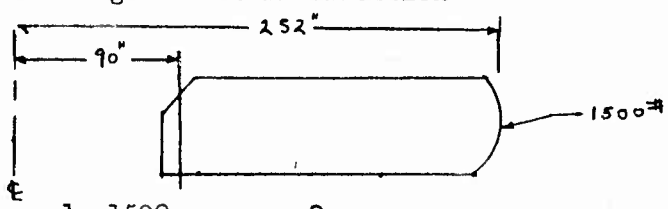

$$I = \frac{1}{12} \frac{1500}{386} (252-90)^2$$

$$I = 8533 \text{ lb. sec}^2/\text{in.}$$

$$I_\alpha = 13.95\ (8.85)^2 + 10953 + 2\left[3.88\left\{(160)^2 + (15.4)^2\right\} + 8533\right] =$$

$$= 1092.6 + 10953 + 219144. = 231190. \quad \text{lb-sec}^2\text{-in}$$

$h_A = h_F = 82.85''$

REV

4. Landing Gear Geometry

Determination of the arm of the main gear

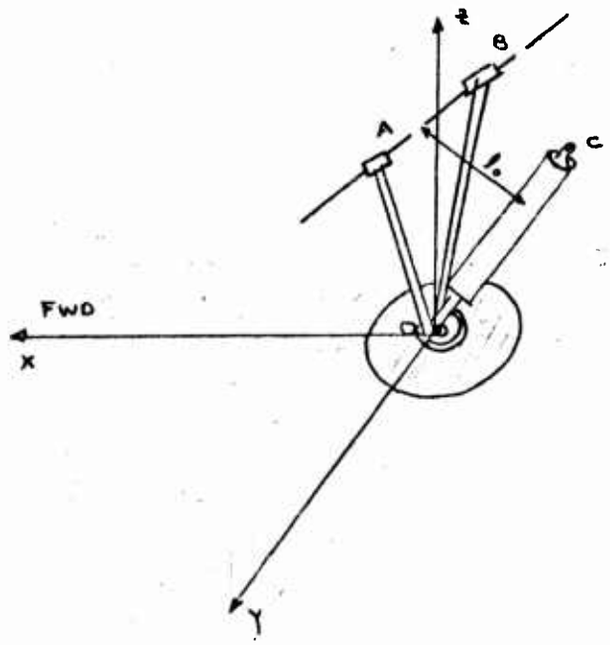

$X_C = -10.4$	$X_A = 24.0$	$X_B = 17.2$
$Y_C = -11.6$	$Y_A = -24.8$	$Y_B = -40.4$
$Z_C = 34.4$	$Z_A = 11.0$	$Z_B = 11.0$

Equation of line CO;

$$\frac{X}{-10.4} = \frac{Y}{-11.6} = \frac{Z}{34.4}$$

or

$$X = -.302\,Z$$

$$Y = -.337\,Z$$

Equation of line AB;

$$Z = 11.0 \qquad\qquad Z = 11.0$$

or:

$$\frac{X - 24.0}{17.2 - 24.0} = \frac{Y + 24.8}{-40.4 + 24.8} \qquad \frac{X - 24.0}{-6.8} = \frac{Y + 24.8}{-15.6}$$

REV

A plane passing through CC and parallel to ground;

$$x + \lambda Y + .302\ Z + .337\ \lambda Z = 0$$

parallelism gives:

$$1(-6.8) + \lambda\ (-15.6) = 0$$

$$\lambda = \frac{6.8}{15.6} = -\ \ 436$$

Thus the equation of the plane is;

$$x - 0.436\ Y + 0.155\ Z = 0$$

A plane passing through AB and parallel to CC;

$$\frac{X-24.0}{-6.8} + \lambda Z = \frac{Y + 24.8}{-15.6} + 11.0\ \lambda \quad \text{er:}$$

$$-15.6x + 6.8\ Y + 106.0\ \lambda Z + 542.5 - 1166.0\ \lambda = 0$$

parallelism gives;

$$(-15.6)\ (-10.4) + (6.8)\ (-11.6) + (106.0\lambda)\ (34.4) = 0$$

$$\lambda = -\ \frac{83.5}{3650} = -0.0228$$

thus the equation of the plane is;

$$x - 0.436\ Y + 0.155Z - 36.52 = 0$$

therefore the distance between the above // planes is;

$$l_o = \frac{36.52}{1 + 436^2 + .155^2} = 33.2 \text{ in.}$$

REV

5. First Flexible Bending Frequency of Floating Fuel Wings

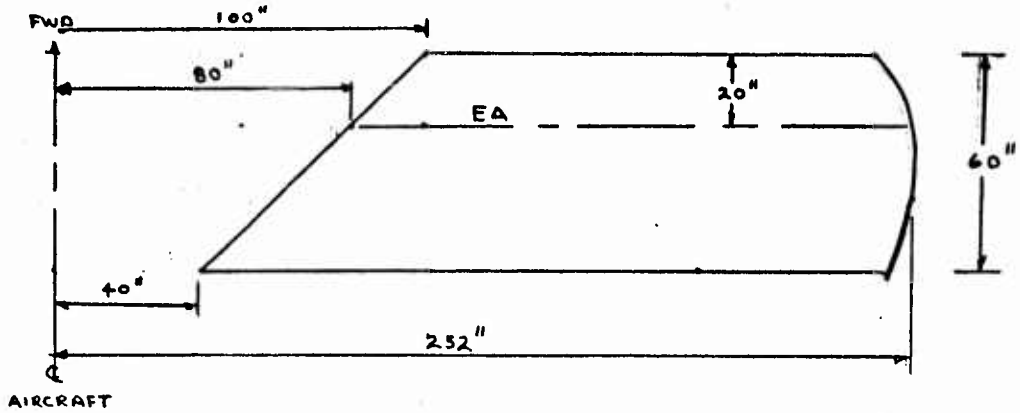

Natural Frequency

$$\omega = 15.4 \sqrt{\frac{EI}{M L^3}} \quad \text{, where:}$$

$EI = 1250 \times 10^6$ lb. in^2 ,

$l = 252 - 80 = 172$ in.

M = Total mass of wing

$$M_0 = \frac{375}{386.4} = .9705 \text{ lb. sec}^2/\text{in} \qquad \text{(0\% fuel)}$$

$$M_{100} = \frac{1500}{386.4} = 3.882 \text{ lb. sec}^2/\text{in} \qquad \text{(100\% fuel)}$$

Then:

$$\omega_0 = 15.4 \sqrt{\frac{1250 \times 10^6}{.9705 \times 172^3}} = 244.9 \text{ rad/sec} \qquad \text{(0\% fuel)}$$

$$\omega_{100} = 15.4 \sqrt{\frac{1250 \times 10^6}{3.882 \times 172^3}} = 122.5 \text{ rad/sec} \qquad \text{(100\% fuel)}$$

REV

6. Oleo Spring Rate

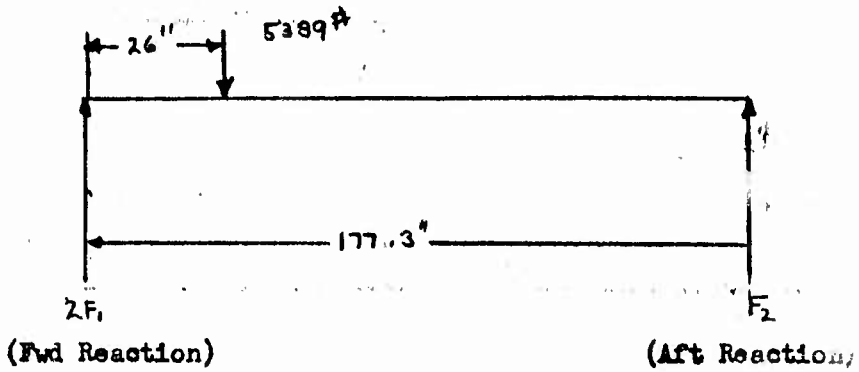

$$\Sigma M_F = 0 = F_2\,(177.3) - 5389\,(26)$$

$F_2 = 790$ lb./gear

$F_1 = 2300$ lb./gear

Oleo properties,

$V_S = 13.27\ in^3$ $V_C = 3.50\ in^3$ $V_E = 69.95\ in^3$

$A = 4.41\ in^2$ Dia. = 2.296 in. REF 112

0% Airborne case -

$\psi = 68°$

$$F_o = \frac{2300}{\sin\psi} = \frac{2300}{.927} = 2481$$

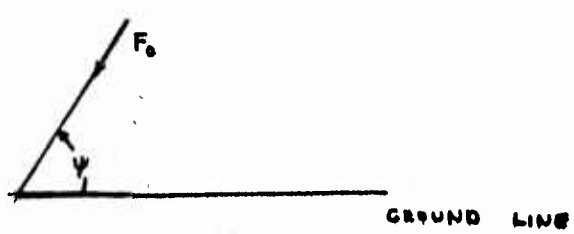

REV

$$C = \frac{F_o V}{A} = \frac{(2481)\ (13.27)}{4.41} = 7466.\ \text{lb. in. (constant)}$$

$$K_S = \frac{A^2 nC}{V^{n+1}} \quad \text{(n=1 for isothermal compression of the oleo)}$$

$$K_S = \frac{(4.41)^2\ (7466)}{(13.27)^2} = 824.6 \ \text{lb./in.}$$

50% Airborne case

Assume $F_o = 1241$ lb.

$$V = \frac{AC}{F_o} = \frac{(4.41)\ (7466)}{1241} = 26.53 \ \text{in}^3$$

$$K_S = \frac{(4.41)^2\ (7466)}{(26.53)^2} = 206.3 \ \text{lb./in}$$

100% Airborne case

For computer program purpose assume:

$$K_S = .1\ K_S \ @\ 0\% \text{ Airborne} = 82.5 \ \text{lb./in.}$$

Wing oleos are assumed to have the same properties as the main oleos.

7. <u>Aerodynamic Spring Rate of Wing</u>

$$K_{\alpha w} = 1/8\ \rho\ a_\infty\ C_o\ V^2\ L^2 = \frac{1}{8}\ (.1147 \times 10^{-6})\ (5.75)\ (60)\ (172)^2\ V^2 =$$

$$= .1463\ V^2$$

8. <u>Tire Spring Rate</u>

Ref: 12

Main Gear: One 6.00-6, 4 pr tire at 75 psi

Tail Gear: One 10 x 3, 4 pr tire at 55 psi

% Airborne	Vertical Rate		Lateral Rate	
	Main	Tail	Main	Tail
0	1575	798	630	319
50	1438	718	575	287

REV

9. Mass and Aerodynamic constants of Wings

$\varepsilon_4 = 80$ $\qquad$ μ = mass per unit length of wing

$\ell = 172$ in. $\qquad$ γ = aerodynamic wing damper per unit length of wing

a. 0% Fuel in Wings -

$$\mu = \frac{375}{386.4}\,\frac{1}{172} = .0056$$

$$\gamma = \frac{1}{2}\rho a_\infty C_o V = \frac{1}{2}(.1147 \times 10^{-6})\,(5.75)\,(60)\,V = .00001979\,V$$

Case I; V = 0 Knots

$$a_1 = \int \mu r^2 dr = \frac{1}{3}\mu \ell^3 = \frac{1}{3}(.0056)(172)^3 = 9498$$

$$a_2 = \sum m z_w^{(1)2} = 0.4696$$

$$a_3 = \int \mu(\varepsilon_4 + r) r\,dr = \frac{1}{2}\varepsilon_4 \mu \ell^2 + \frac{1}{3}\mu \ell^3 = 16125$$

$$a_4 = \sum m(\varepsilon_4 + r) z_w^{(1)} = -24.56$$

$$a_5 = \int \frac{1}{2}\rho a_\infty C_o V (\varepsilon_4 + r)^2 dr = \gamma \int (\varepsilon_4 + r)^2 dr = 0$$

$$a_6 = \int \frac{1}{2}\rho a_\infty C_o V r^2 dr = 0$$

$$a_7 = \sum \frac{1}{2}\rho a_\infty C_o V (\Delta r)\, z_w^{(1)2} = 0$$

$$a_8 = \int \frac{1}{2}\rho a_\infty C_o V (\varepsilon_4 + r) r\,dr = 0$$

$$a_9 = \sum \frac{1}{2}\rho a_\infty C_o V (\Delta r)(\varepsilon_4 + r) z_w^{(1)} = 0$$

$$a_{10} = \sum \frac{1}{2}\rho a_\infty C_o V r (\Delta r)\, \Delta z_w^{(1)} = 0$$

REV

Case II; V = 80 Knots

$\lambda = 0.00001979 \times 1621 = 0.3208$

$a_1 = 9498$

$a_2 = .4696$

$a_3 = 16125$

$a_4 = -24.56$

$a_5 = \lambda \int (\varepsilon_4 + r)^2 dr = 0.3209\ (1100800. + 2366720 + 1696160) = 165700.$

$a_6 = \lambda \int r^2 dr = .00001979 \times 1621\ (1696160) = 54412$

$a_7 = \lambda \sum \Delta r\, z_w^{(1)^2} = 2.404$

$a_8 = \lambda \int r(\varepsilon_4 + r) dr = .00001979 \times 1621\ (\frac{80.172^2}{2} + 1696160) = 92375$

$a_9 = \lambda \sum \Delta r(\varepsilon_4 + r) z_w^{(1)} = -125.76$

$a_{10} = \lambda \sum r(\Delta r) z_w^{(1)} = -10.56$

b. 100% Fuel in Wings

Case III; V = 0 Knots

$\mu = \frac{1500}{386.4} \times \frac{1}{172} = .0224$

$\lambda = 0$

$a_1 = \int \mu r^2 dr = \frac{1}{3}\ (.0226)\ (172)^3 = 37992$

$a_2 = \sum m z_w^{(1)^2} = 1.8784$

$a_3 = \int \mu\ (\varepsilon_4 + r) r\, dr = 64500$

$a_4 = -98.24$

$a_5 = a_6 = a_7 = a_8 = a_9 = a_{10} = 0$

REV

Case IV; V = 80 Knots

$\lambda = (.00001979)\ (1621) = .3208$

$a_1 = 37992$

$a_2 = 1.8784$

$a_3 = 64500$

$a_4 = -98.24$

$a_5 = .03208 \int (\epsilon_4 + r)^2 dr = 165700.$

$a_6 = .03208 \int r^2 dr = 54412$

$a_7 = \lambda \sum \Delta r\, z_w^{(1)^2} = 2.404$

$a_8 = \lambda \int r\,(\epsilon_4 + r)\, dr = 92375$

$a_9 = \lambda \sum \Delta r (\epsilon_4 + r)\, z_w^{(1)} = -125.76$

$a_{10} = \lambda \sum r(\Delta r)\, z_w^{(1)} = -10.56$

REV

IRM PROGRAM NO. 169 MECHANICAL INSTABILITY ANALYSIS OF HELICOPTER RANGE EXTENSION WITHOUT WING FUEL TANKS

BASIC DATA SHEET 1 OF 2

% AIRBORNE, FUSELAGE →			0	50	100		
% AIRBORNE, WINGS →			—	—	—		
FORWARD SPEED, KNOTS →			0	→	→		
% FUEL IN WINGS →			—	—	—		
a_1		101	0	→	→		
a_2		102	0	→	→		
a_3		103	0	→	→		
a_4		104	0	→	→		
a_5		105	0	→	→		
a_6		106	0	→	→		
a_7		107	0	→	→		
a_8		108	0	→	→		
a_9		109	0	→	→		
a_{10}		110	0	→	→		
M	LB SEC²/IN	111	13.95	→	→		
I_α	LB SEC² IN	112	10953	→	→		
K_s	LB/IN	113	824.6	206.3	82.5		
C_s	LB/IN/SEC	114	50	50	0		
K_{e_y}	LB/IN	115	630	575	630		
K_{e_z}	LB/IN	116	1575	1438	157.5		
R_{e_y}	LB/IN	117	0	→	→		
R_{e_z}	LB/IN	118	0	→	→		
ℓ_o	IN	119	33.2	→	→		
R	IN	120	53	→	→		
R_o	IN	121	6	→	→		
R_q	IN	122	46	→	→		
E_o	IN	123	32	→	→		
E_1	IN	124	48	→	→		
R_F	IN	125	74	→	→		
R_A	IN	126	74	→	→		
T_F	LB	127	0	1348	2695		
T_A	LB	128	0	1348	2695		
K_{SW}	LB/IN	129	.1	→	→		
C_{SW}	LB/IN/SEC	130	0	→	→		

REV

#4112

IBM PROGRAM No. 169 MECHANICAL INSTABILITY ANALYSIS OF HELICOPTER RANGE EXTENSION WITHOUT WING FUEL TANKS

BASIC DATA SHEET 2 OF 2

% AIRBORNE, FUSELAGE →			0	50	100		
% AIRBORNE, WINGS →			—	—	—		
FORWARD SPEED, KNOTS →			0	→	→		
% FUEL IN WINGS →			—	—	—		
$K_{t_{SW}}$	LB/IN	131	.1	→	→		
$K_{t_{RW}}$	LB/IN	132	.1	→	→		
K_{RW}	LB IN/RAD	133	0	→	→		
C_{RW}	LB IN/ RAD/SEC	134	0	→	→		
R_2	IN	135	46	→	→		
R_3	IN	136	22	→	→		
ε_2	IN	137	180	→	→		
ε_3	IN	138	70	→	→		
ε_4	IN	139	80	→	→		
γ_0	DEG	140	45	→	→		
cos γ_0		141	.7071	→	→		
sin γ_0		142	.7071	→	→		
V	IN/SEC	143	0	→	→		
Ω	RAD/SEC	144	30.47	→	→		
ω_1	RAD/SEC	145	244.9	→	→		
$\alpha^{(1)}_{WR}$		146	-.018	→	→		
$\alpha^{(1)}_{WQ}$		147	.009	→	→		
$Z^{(1)}_{WQ}$		148	-.65	→	→		
e_f	IN	149	15	→	→		
m_f	LB SEC²/IN	150	.1276	→	→		
σ_f	LB SEC²	151	9.909	→	→		
I_f	LB SEC² IN	152	1219	→	→		
k_f	LB IN/RAD	153	12260	→	→		
P	LB	154	300	→	→		
C	LB/ IN/SEC	155	0	→	→		
r_0	IN	156	4.50	→	→		
β_0	RAD	157	.08727	→	→		
ω	RAD/SEC	158	1	→	→		
$\Delta\omega$	RAD/SEC	159	1	→	→		
ω_L	RAD/SEC	160	40	→	→		
No.		161	1	→	→		
n = 1 OR 2		748	2	→	→		
n = 3, 4 OR 5		798	3	→	→		

REV

#4112

IBM PROGRAM No. 169 MECHANICAL INSTABILITY ANALYSIS OF HELICOPTER RANGE EXTENSION USING FLOATING WING FUEL TANKS

BASIC DATA SHEET 1 OF 2

% AIRBORNE, FUSELAGE →			100	50	0	100	
% AIRBORNE, WINGS →			0	—	—	100	
FORWARD SPEED, KNOTS →			0	—	—	80	
% FUEL IN WINGS →			0	—	—	0	
a_1		101	.9498	—	—	—	
a_2		102	.4696	—	—	—	
a_3		103	16125	—	—	—	
a_4		104	-24.56	—	—	—	
a_5		105	0	—	—	165,700	
a_6		106	0	—	—	54412	
a_7		107	0	—	—	2.404	
a_8		108	0	—	—	92375	
a_9		109	0	—	—	-125.76	
a_{10}		110	0	—	—	-10.56	
M	LB SEC²/IN	111	15.89	—	—	—	
I_x	LB SEC² IN	112	65864.	—	—	—	
K_s	LB/IN	113	.1	206.3	824.6	.1	
C_s	LB/IN/SEC	114	0	50	50	0	
K_{ey}	LB/IN	115	.1	575	630	.1	
K_{ez}	LB/IN	116	.1	1438	1575	.1	
R_{ey}	LB/IN	117	0	—	—	—	
R_{ez}	LB/IN	118	0	—	—	—	
ℓ_o	IN	119	33.2	—	—	—	
R	IN	120	50	—	—	—	
R_o	IN	121	6	—	—	—	
R_1	IN	122	4.3	—	—	—	
ℓ_o	IN	123	32	—	—	—	
ℓ_1	IN	124	48	—	—	—	
R_F	IN	125	77	—	—	—	
R_A	IN	126	77	—	—	—	
T_F	LB	127	2695	1348	0	2695	
T_A	LB	128	2695	1348	0	2695	
K_{SW}	LB/IN	129	824.6	—	—	.1	
C_{SW}	LB/IN/SEC	130	200	—	—	0	

REV

#4112

IBM PROGRAM No. 169 MECHANICAL INSTABILITY ANALYSIS OF HELICOPTER RANGE EXTENSION USING FLOATING WING FUEL TANKS

BASIC DATA SHEET 2 OF 2

% AIRBORNE, FUSELAGE →			100	50	0	100	
% AIRBORNE, WINGS →			0	—	—	100	
FORWARD SPEED, KNOTS →			0	—	—	80	
% FUEL IN WINGS →			0	—	—	0	
$K_{z_{LW}}$	LB/IN	131	630	—	—	.1	
$K_{z_{RW}}$	LB/IN	132	1575	—	—	.1	
$K_{\alpha W}$	LB IN/RAD	133	0	—	—	384,400	
$C_{\alpha W}$	LB IN/ RAD/SEC	134	0	—	—	—	
h_2	IN	135	43	—	—	—	
h_3	IN	136	22	—	—	—	
ℓ_2	IN	137	80	—	—	—	
ℓ_3	IN	138	70	—	—	—	
ℓ_4	IN	139	80	—	—	—	
γ_0	DEG	140	45	—	—	—	
cos γ_0		141	.7071	—	—	—	
sin γ_0		142	.7071	—	—	—	
V	IN/SEC	143	0	—	—	1621	
Ω	RAD/SEC	144	30.47	—	—	—	
ω_1	RAD/SEC	145	244.9	—	—	—	
$\alpha^{(1)}_{WR}$		146	-.018	—	—	—	
$\alpha^{(1)}_{Wq}$		147	.009	—	—	—	
$Z^{(1)}_{Wq}$		148	-.65	—	—	—	
e_f	IN	149	15	—	—	—	
m_f	LB SEC²/IN	150	.1276	—	—	—	
δ_f	LB SEC²	151	9.909	—	—	—	
I_f	LB SEC² IN	152	1219	—	—	—	
k_f	LB IN/RAD	153	12260	—	—	—	
P	LB	154	300	—	—	—	
C	LB/ IN/SEC	155	0	—	—	—	
r_0	IN	156	4.50	—	—	—	
β_0	RAD	157	.08727	—	—	—	
ω	RAD/SEC	158	1	—	—	—	
$\Delta\omega$	RAD/SEC	159	1	—	—	—	
ω_c	RAD/SEC	160	40	—	—	—	
No.		161	1	—	—	—	
n = 1 OR 2		748	2	—	—	—	
n = 3, 4 OR 5		798	3	—	—	—	

REV

#4112

IRM PROGRAM NO. 169 MECHANICAL INSTABILITY ANALYSIS OF HELICOPTER RANGE EXTENSION USING FLOATING WING FUEL TANKS

BASIC DATA SHEET 1 OF 2

% AIRBORNE, FUSELAGE →			0	50	100	←	
% AIRBORNE, WINGS →			0	←	←	100	
FORWARD SPEED, KNOTS →			0	←	←	80	
% FUEL IN WINGS →			100	←	←	←	
a_1		101	37992	←	←	←	
a_2		102	1.8784	←	←	←	
a_3		103	64500	←	←	←	
a_4		104	− 98.24	←	←	←	
a_5		105	0	←	←	165,700	
a_6		106	0	←	←	54412	
a_7		107	0	←	←	2.404	
a_8		108	0	←	←	92375	
a_9		109	0	←	←	−125.76	
a_{10}		110	0	←	←	−10.56	
M	LB SEC²/IN	111	21.71	←	←	←	
I_x	LB SEC² IN	112	231190.	←	←	←	
K_s	LB/IN	113	824.6	206.3	.1	←	
C_s	LB/IN/SEC	114	50	50	0	←	
K_{t_1}	LB/IN	115	630	575	.1	←	
K_{t_2}	LB/IN	116	1575	1438	.1	←	
R_{t_1}	LB/IN	117	0	←	←	←	
R_{t_2}	LB/IN	118	0	←	←	←	
ℓ_o	IN	119	33.2	←	←	←	
R	IN	120	44.15	←	←	←	
R_o	IN	121	6.	←	←	←	
R_1	IN	122	37.15	←	←	←	
E_o	IN	123	32	←	←	←	
E_1	IN	124	48	←	←	←	
K_F	IN	125	82.85	←	←	←	
K_A	IN	126	82.85	←	←	←	
T_F	LB	127	0	1348	2695	←	
T_A	LB	128	0	1348	2695	←	
K_{SW}	LB/IN	129	824.6	←	←	.1	
C_{SW}	LB/IN/SEC	130	200	←	←	0	

REV

#412

IBM PROGRAM No. 169 MECHANICAL INSTABILITY ANALYSIS OF HELICOPTER RANGE EXTENSION USING FLOATING WING FUEL TANKS

BASIC DATA SHEET 2 OF 2

% AIRBORNE, FUSELAGE →			0	50	100	—	
% AIRBORNE, WINGS →			0	—	—	100	
FORWARD SPEED, KNOTS →			0	—	—	80	
% FUEL IN WINGS →			100	—	—	—	
$K_{z_{1W}}$	LB/IN	131	630	—	—	.1	
$K_{z_{2W}}$	LB/IN	132	1575	—	—	.1	
K_{xW}	LB IN/RAD	133	0	—	—	384,400	
C_{xW}	LB IN/RAD/SEC	134	0	—	—	0	
R_2	IN	135	37.15	—	—	—	
R_3	IN	136	22	—	—	—	
ε_2	IN	137	180	—	—	—	
ε_3	IN	138	70	—	—	—	
ε_4	IN	139	80	—	—	—	
γ_0	DEG	140	45	—	—	—	
cos γ_0		141	.7071	—	—	—	
sin γ_0		142	.7071	—	—	—	
V	IN/SEC	143	0	—	—	1621	
Ω	RAD/SEC	144	30.47	—	—	—	
ω_1	RAD/SEC	145	122.5	—	—	—	
$\alpha^{(1)}_{WR}$		146	-.018	—	—	—	
$\alpha^{(1)}_{WQ}$		147	.009	—	—	—	
$Z^{(1)}_{WQ}$		148	-.65	—	—	—	
e_f	IN	149	15	—	—	—	
m_f	LB SEC²/IN	150	.1276	—	—	—	
σ_f	LB SEC²	151	9.909	—	—	—	
I_f	LB SEC² IN	152	1219	—	—	—	
k_f	LB IN/RAD	153	12260	—	—	—	
P	LB	154	300	—	—	—	
C	LB/IN/SEC	155	0	—	—	—	
r_0	IN	156	4.50	—	—	—	
β_0	RAD	157	.08727	—	—	—	
ω	RAD/SEC	158	1	—	—	—	
$\Delta\omega$	RAD/SEC	159	1	—	—	—	
ω_L	RAD/SEC	160	40	—	—	—	
No.		161	1	—	—	—	
r = 1 OR 2		748	2	—	—	—	
r = 3, 4 OR 5		798	3	—	—	—	

REV

#4112

APPENDIX A

6. Ground Instability Calculations

Sikorsky S-58 (H-34) Helicopter

REV

A 68
R-197

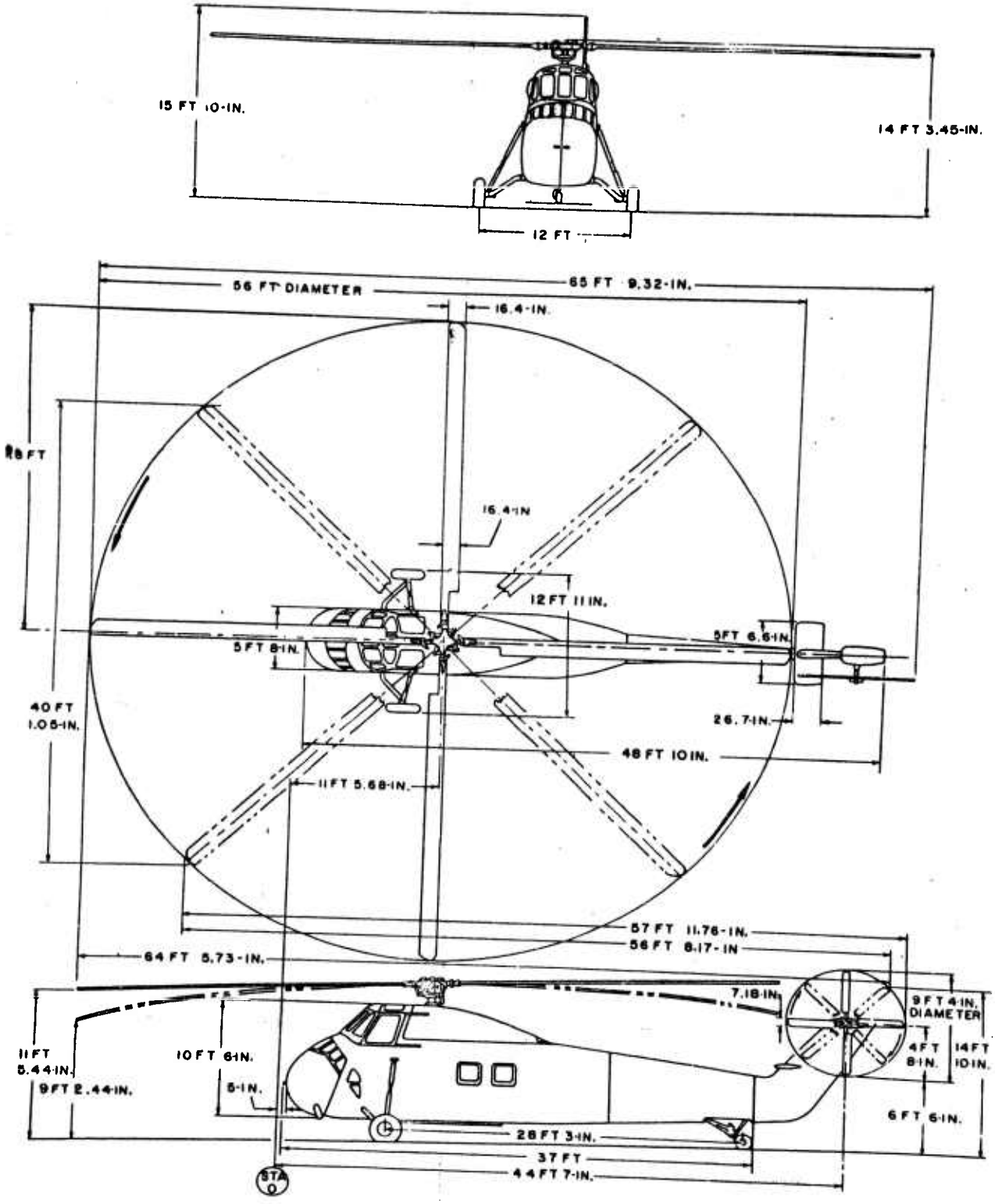
15 FT 10-IN.
14 FT 3.45-IN.
12 FT
56 FT DIAMETER
65 FT 9.32-IN.
16.4-IN.
28 FT
16.4-IN
12 FT 11 IN.
5 FT 6.6-IN.
5 FT 8-IN.
40 FT
1.05-IN.
26.7-IN.
48 FT 10 IN.
11 FT 5.68-IN.
57 FT 11.76-IN.
56 FT 8.17-IN
64 FT 5.73-IN.
7.18-IN.
9 FT 4-IN.
DIAMETER
11 FT
5.44-IN.
10 FT 6-IN.
9 FT 2.44-IN.
5-IN.
4 FT
8-IN.
14 FT
10 IN.
6 FT 6-IN.
28 FT 3-IN.
37 FT
44 FT 7-IN.
STA
0

1

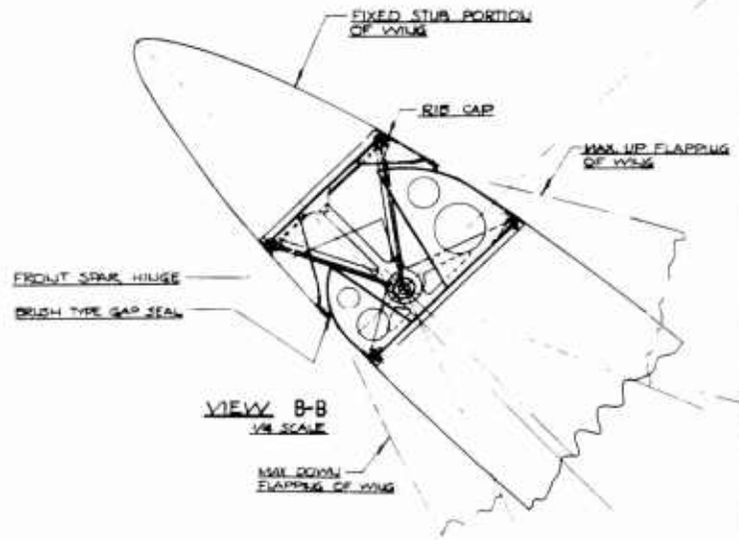

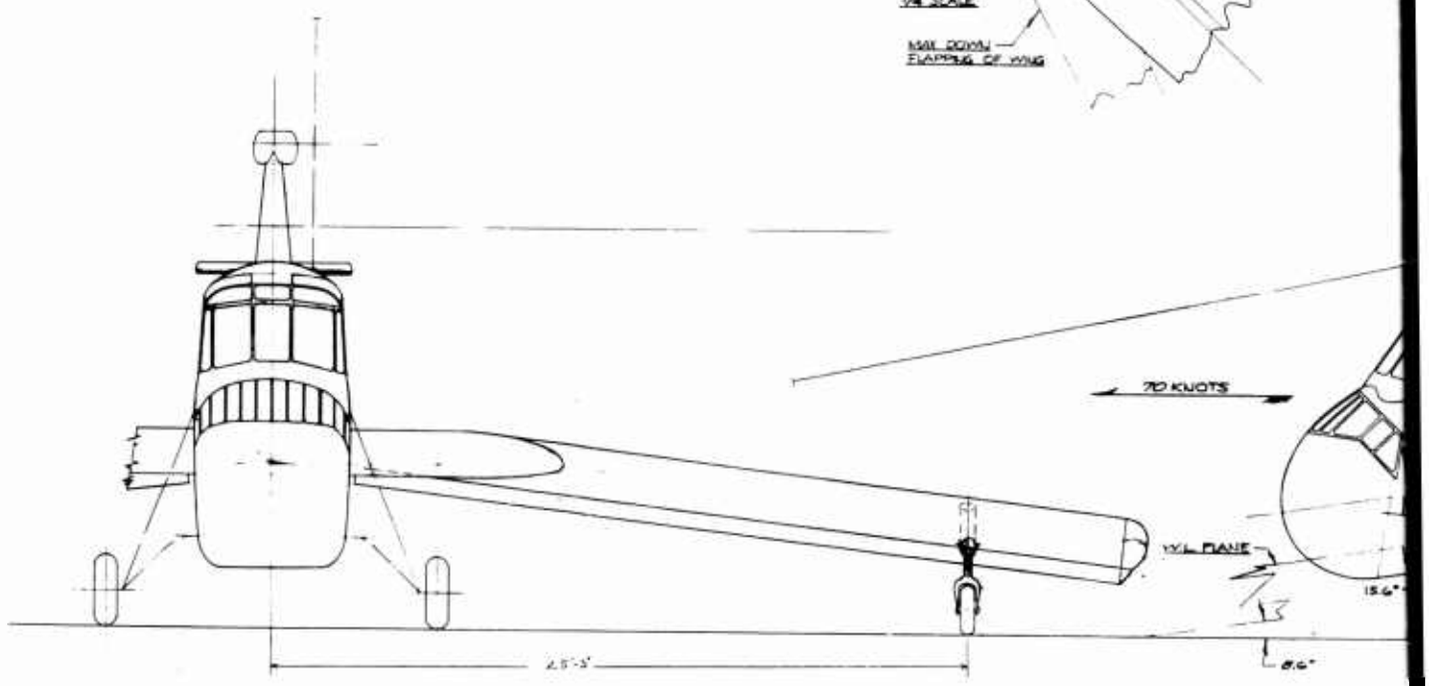

TAKE-OFF ATTITUDE

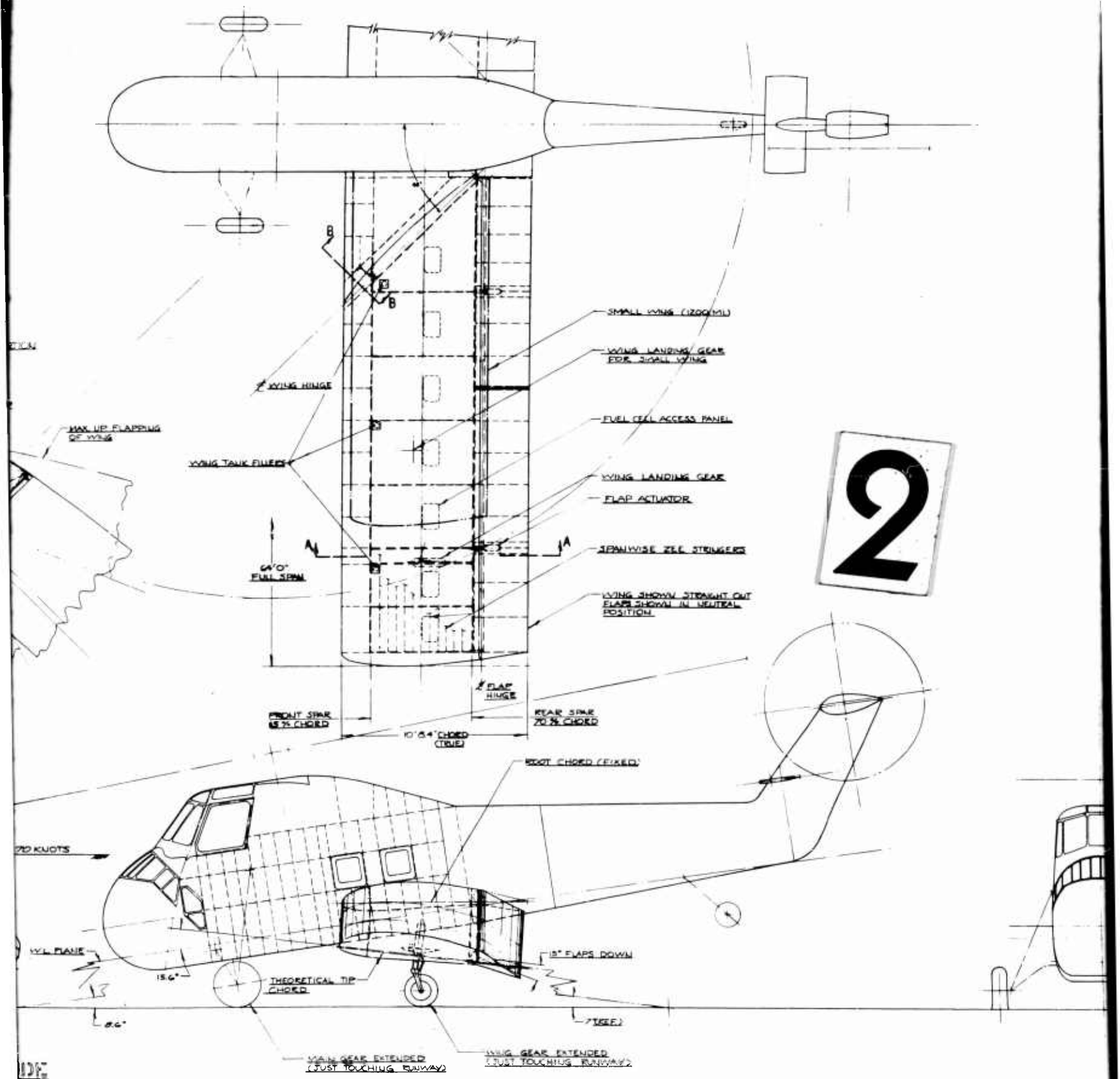
SMALL WING (1200 MI)
WING LANDING GEAR FOR SMALL WING
WING HINGE
FUEL CELL ACCESS PANEL
MAX UP FLAPPING OF WING
WING TANK FILLERS
WING LANDING GEAR
FLAP ACTUATOR
SPANWISE ZEE STRINGERS
64'0" FULL SPAN
WING SHOWN STRAIGHT OUT FLAPS SHOWN IN NEUTRAL POSITION
FLAP HINGE
FRONT SPAR 15 % CHORD
REAR SPAR 70 % CHORD
10'8.4" CHORD (TRUE)
ROOT CHORD (FIXED)
270 KNOTS
W.L. PLANE
15.6°
THEORETICAL TIP CHORD
15° FLAPS DOWN
(TREE)
MAIN GEAR EXTENDED (JUST TOUCHING RUNWAY)
WING GEAR EXTENDED (JUST TOUCHING RUNWAY)
2

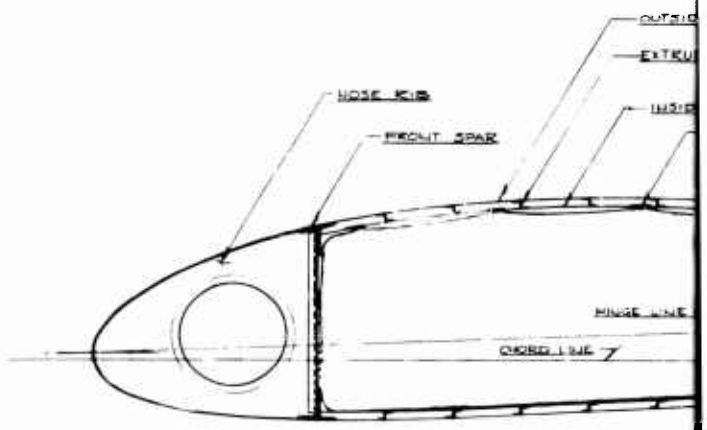

VIEW A-A
1/4 SCALE

3

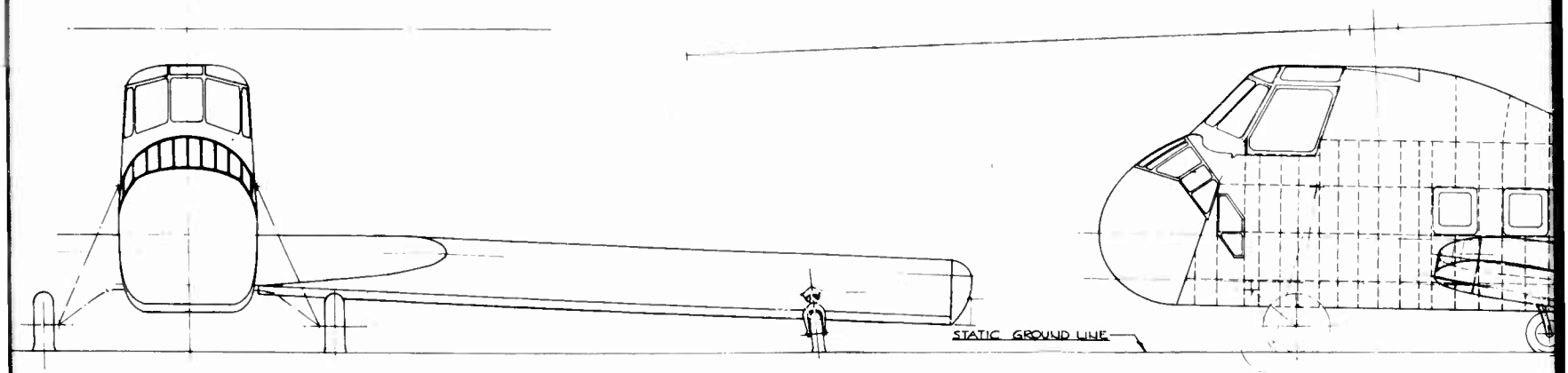

STATIC POSITION

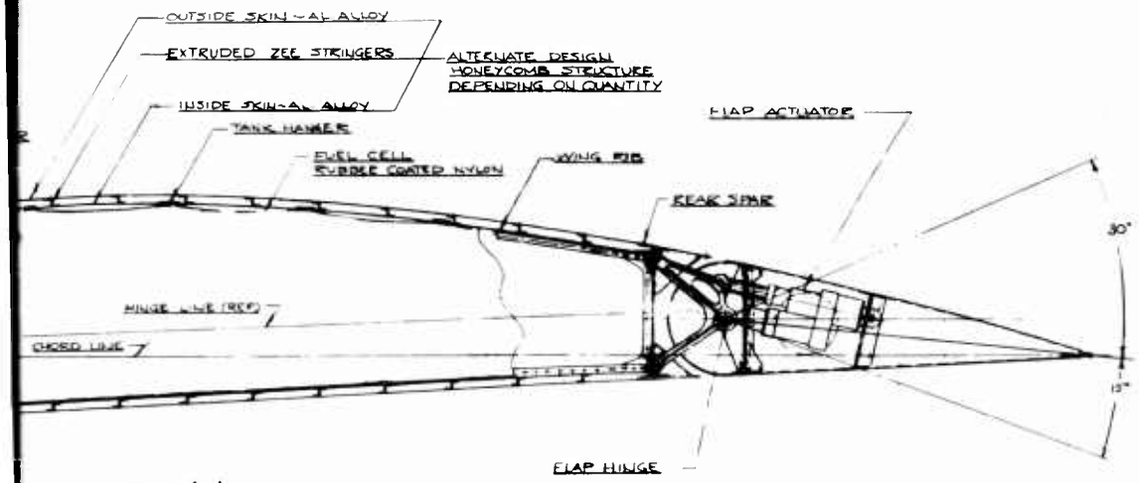

VIEW A-A
1/4 SCALE

4

NOTE -
1) AIRFRAME MODIFICATION TO H-34 SIMILAR TO THAT SHOWN FOR H-21 ON DWG. NO. 064101

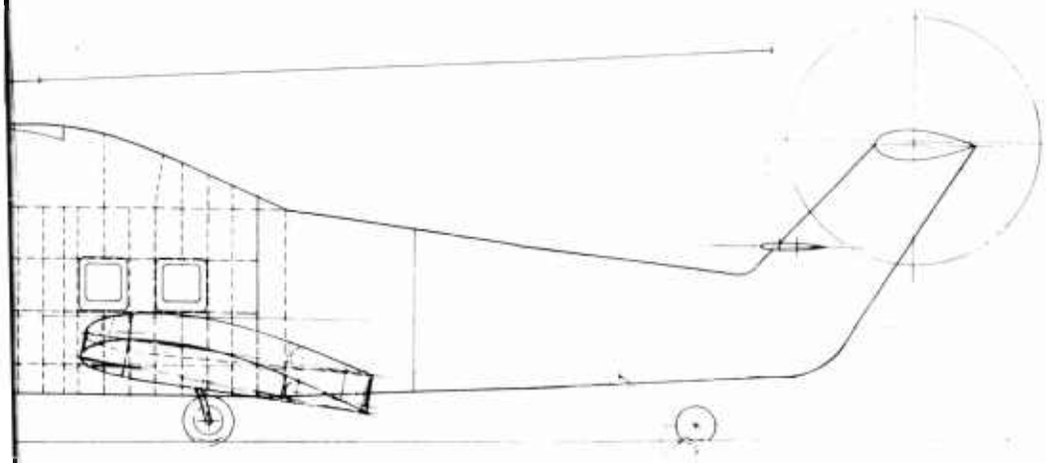

PRINT REDUCED
ONE - QUARTER
INDICATED SCALE

THIS DRAWING INCLUDES INFORMATION PROPRIETARY TO VERTOL DIVISION BOEING AND SHALL NOT WITHOUT PERMISSION OF VERTOL DIVISION BOEING BE USED OR DUPLICATED BY ANYONE OTHER THAN AGENCIES OF THE U.S. GOVERNMENT ACTING PURSUANT TO CONTRACTUAL OR STATUTORY AUTHORIZATION

DRAWN BY	CHECKED	RANGE EXTENSION SYS. FLOATING FUEL WING, H-34	VERTOL BOEING MORTON, PENNSYLVANIA
			064102
			SHEET 1 OF 1

GROUND INSTABILITY CALCULATIONS
SIKORSKY S-58 (H-34) HELICOPTER

1. MASS PROPERTIES

G.W. WITHOUT FLOATING FUEL WING

9300#

$$M = \frac{9300^{\#}}{386} = 24.10 \ \#SEC^2/IN$$

ROLL INERTIA WITHOUT FLOATING FUEL WING

$$I_x = 5826 \times \frac{9300}{13300} = 4075 \text{ SLUG FT}^2, \ 48950 \ \#SEC^2\text{-IN.}$$ REF. PG. A-86

2. PROPERTIES WITH FLOATING FUEL WING (100% FUEL)

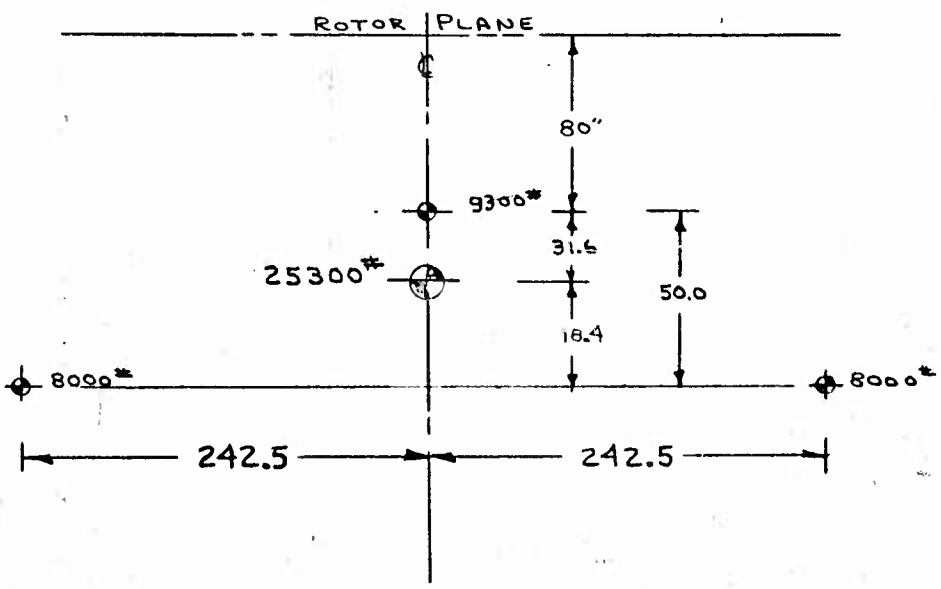

G.W. = 9300 + 2(8000) = 25300#

$$M = \frac{25300}{386} = 65.5 \ \#SEC^2/IN \qquad M_W = \frac{8000}{386} = 20.7 \ \#\text{-}SEC^2/IN$$

VERT. C.G.

$$z = \frac{9300 \times 50}{25300} = 18.4"$$

$$I_\alpha = I_{O-9300} + 24.10(31.65)^2 + 2I_{O-8000} + 2 \cdot 20.7\left[(18.35)^2 + (242.5)^2\right]$$

$$I_\alpha = 48950 + 24200 + 2 \times 182000 + 41.4\left[59137\right]$$

$$I_\alpha = 437{,}150 + 2450000 = 2887150 \ \#SEC^2\text{-IN.}$$

REV

3. PROPERTIES WITH FLOATING FUEL WING (0% FUEL)

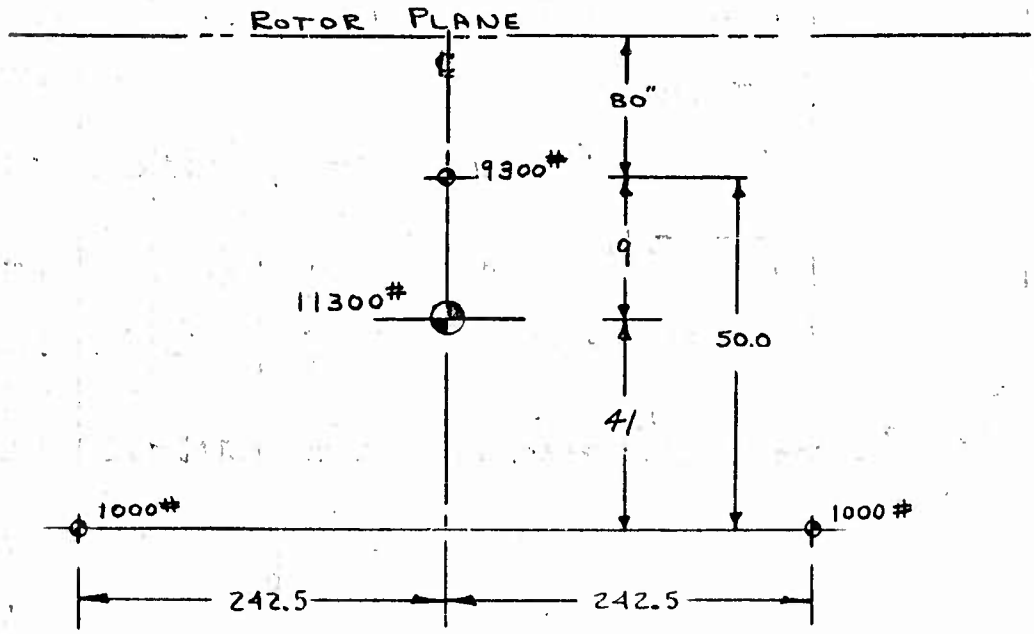

$$G.W. = 9300 + 2(1000) = 11300\#$$

$$M = \frac{11300}{386} = 29.3 \ \# \ SEC^2/IN. \qquad M_W = \frac{1000}{386} = 2.59 \ \# \text{-}SEC^2/IN$$

VERT. C.G.

$$Z = \frac{9300(50.0)}{11300} = 41.0$$

$$I_\alpha = I_{o\text{-}9300} + 24.10\,(9)^2 + 2\,I_{o\text{-}1000} + 2 \times 2.59\left[(242.5)^2 + (41)^2\right]$$

$$I_\alpha = 48950 + 1950 + 2 \times 27750 + 5.18\,[60480]$$

$$I_\alpha = 106400 + 314000$$

$$I_\alpha = 420400 \ \# \ SEC^2\text{-}IN$$

REV

WING MASS & STIFFNESS DISTRIBUTION (0% FUEL)

STATION n	MASS m, # SEC²/IN	STIFFNESS EI, # IN²	LENGTH L, IN.	RADIUS r_i, IN.
1	0.362	2500.×10⁶	45	303
2	0.362	3000.×10⁶	45	258
3	0.362	3600.×10⁶	28	213
4	0.058	3600.×10⁶	28	185
5	0.362	3200.×10⁶	45	157
6	0.362	2700.×10⁶	45	112
7	0.362	2200.×10⁶	45	67
8	0.362	2200.×10⁶	22	22

PINNED-FREE WING NATURAL FREQUENCIES FROM A SOLUTION PROGRAMMED ON A DIGITAL COMPUTER.

100% FUEL

1ST FLEX. MODE
$\omega_1 = 32.07$ RAD/SEC

2ND FLEX MODE
$\omega_2 = 102.1$ RAD/SEC

0% FUEL

1ST FLEX MODE
$\omega_1 = 90.8$ RAD/SEC.

2ND FLEX MODE
$\omega_2 = 289$ RAD/SEC

WING DEFLECTION

LANDING GEAR - CONSIDERING THE % SPAN LOCATION OF S-58

$\alpha^{(1)}_{wg} = +0.0150$ $\qquad$ $\alpha^{(1)}_{wg} = +0.0150$

$z^{(1)}_{wg} = +0.288$ $\qquad$ $z^{(1)}_{wg} = +0.288$

HINGE

$\alpha^{(1)}_{wh} = -0.0184$ $\qquad$ $\alpha^{(1)}_{wh} = -0.0184$

BLADE PROPERTIES

WT. & STIFFNESS DISTRIB. SEE PAGE A-86

BLADE MASS

$M_B = \frac{230^{\#}}{386} = 0.596$ # SEC²/IN PG. A-86

NUMBER OF BLADES

$n = 4$

LAG HINGE OFFSET

$e = 12.0$ IN.

REV

BLADE PROPERTIES (CONT.)

ROTOR SPEED

$\Omega = 23.14$ RAD/SEC , 221 RPM

BLADE INERTIA ABOUT LAG HINGE

$I_\zeta = 13,553$ #SEC^2-IN.

BLADE STATIC MOMENT ABOUT LAG HINGE

$\sigma_\zeta = 63.47$ #SEC^2

5. TIRE PROPERTIES

MAIN GEAR

TYPE: 11.00 - 12 6 PLY TYPE III HELICOPTER

INFLATION PRESSURE: 45-50 PSI

RATED PRESSURE: 50 PSI, (6900)#

TIRE LOADS (ASSUMING ONLY WT OF FUSELAGE ACTING)

0% AIRBORNE

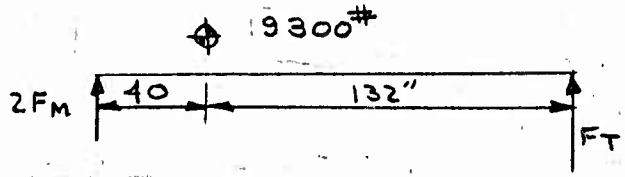

$F_M = \frac{1}{2} \times \frac{132}{172} \times 9300^{\#} = 3570^{\#}$

25 % AIRBORNE

$F_M = \frac{9300}{2} \times 0.75 = 2680^{\#}$

50% AIRBORNE

$F_M = \frac{9300}{2} \times 0.50 = 2330^{\#}$

REV

TIRE PROPERTIES (Cont.)

Tire Loads -
75% Airborne

$$F_M = \frac{9300}{2} \times 0.25 - 1160\#$$

WING GEAR

Type: For spring rates consider 1-24 x 5.5 Type VII tires per gear

Inflation Pressure: 145 psi

Gear Loads (100% Fuel) - Approximated to be equal to the weight of each wing.

0% Airborne

$F_w = 8000\#$

25% Airborne

$F_w = 6000\#$

50% Airborne

$F_w = 4000\#$

75% Airborne

$F_w = 2000\#$

Gear Loads (0% Fuel)

0% Airborne

$F_w = 1000\#$

25% Airborne

$F_w = 750\#$

50% Airborne

$F_w = 500\#$

75% Airborne

$F_w = 250\#$

REV

TIRE PROPERTIES

Main Gear -

Vertical Tire Rates	Lateral Tire Rates (Assumed as ½ K_{TZ})
0% Airborne	0% Airborne
K_{TZ} = 2560#/IN	K_{TY} = 1280#/IN
25% Airborne	25% Airborne
K_{TZ} = 2270#/IN	K_{TY} = 1135#/IN
50% Airborne	50% Airborne
K_{TZ} = 2220#/IN	K_{TY} = 1110#/IN
75% Airborne	75% Airborne
K_{TZ} = 1800#/IN	K_{TY} = 900#/IN
100% Airborne	100% Airborne
K_{TZ} = 180#/IN	K_{TY} = 90#/IN

Ref: U. S. Aircraft Tire Manual

Wing Gear -

Vertical Tire Rates	Lateral Tire Rates
0% Airborne (100% Fuel)	
K_{TZ} = 5100#/IN	K_{TY} = 2550#/IN
25% Airborne (100% Fuel)	
K_{TZ} = 4900#/IN	K_{TY} = 2450#/IN
50% Airborne (100% Fuel)	
K_{TZ} = 4500#/IN	K_{TY} = 2250#/IN
75% Airborne (100% Fuel)	
K_{TZ} = 4100#/IN	K_{TY} = 2050#/IN
100% Airborne (100% Fuel)	
K_{TZ} = 410#/IN	K_{TY} = 205#/IN
0% Airborne (0% Fuel)	
K_{TZ} = 3800#/IN	K_{TY} = 1900#/IN

REV

TIRE PROPERTIES (Cont.)

Wing Gear -

Vertical Tire Rates	Lateral Tire Rates
50% Airborne (0% Fuel)	
K_T = 3500#/IN	K_{TY} = 1750#/IN
100% Airborne (0% Fuel)	
K_T = 350#/IN	K_{TY} = 1750#/IN

Vertical Rates: Goodyear Test H-70 6-10-1958
Lateral Rates: Goodyear Test

6. OLEO PROPERTIES

Wing Gear - For properties consider the Vertol YHC-1A main gear oleo.

$A_p = 7.06\ IN^2 \qquad Z_s = 2.0 \qquad V_o = 2A_p$

$$P_s \left[V_o + Z_s\ A_p\right] = \frac{Wstatic}{A_p}\ (1-\eta)\ \left[Z\ A_p + V_o\right]$$

A_p, Piston Area — P_s, Static Pressure

V_o, Trapped Volume — F_s, Static Load

Z_s, Static Stroke Position — Z, Stroke Position

η % Airborne

$$F_s \left[2 + Z_s\right] = F_s\ (1-\eta) \left[Z + 2\right]$$

$$2 + Z_s = (1-\eta)\ \left[Z + 2\right]$$

$$Z = \frac{Z_s + 2}{1-\eta} - 2$$

Let $Z_s = 2.0$ For 100% Fuel Loads

$$Z = \frac{4}{1-\eta} - 2$$

Oleo Spring Rate,

$$K_s = \frac{2\ P_s\ A_p\ Z_s}{Z^2+2ZZ_s+Z_s^2} = \frac{4\ F_s}{Z^2+4Z+4}$$

REV

From Oleo Analysis for Vertol Model 107.

OLEO PROPERTIES - (Cont.)

Wing (100% Fuel) - Gear loads consider total weight of semi-wing.

0% Airborne

$Z_s = 2.0$ In.

$$K = \frac{4 \times 8000}{4 + 8 + 4} = \frac{32000}{16} = 2000\#/IN$$

25% Airborne

$$Z = \frac{4}{.75} - 2 = 3.33 \text{ IN}$$

$$K = \frac{32000}{11.1+13.3+4} = \frac{32000}{28.6} = 1120\#/IN$$

50% Airborne

$$Z = \frac{4}{.5} - 2 = 6.0 \text{ IN}$$

$$K = \frac{32000}{36+24+4} = \frac{32000}{64} = 500\#/IN$$

75% Airborne

$$Z = \frac{4}{.25} - 2 = 14 \text{ IMP}$$

$Z_{ext} = 11.0$

$$K = \frac{32000}{121+44+4} = \frac{32000}{169} = 189\#/IN$$

Note: The oleo spring the smaller of the oleo, tires series combination controls the combined vertical rate of the wing. Therefore, the effective vertical spring of the wing can be adjusted by changes in the oleo only.

Wing (0% Fuel) 0%, 50%, 100%

$Z = 11.0$

$K = 189\#/IN$

In order to eliminate bottoming of the oleo assume that a mechanical spring with a rate of 500#/IN engages at Z = 10.0 IN.

REV

OLEO PROPERTIES

	WING (100% FUEL)	WING (0% FUEL)
0%	Z = 2.0 K = 2000 #/IN	Z = 10.0 K = 500 #/IN
25%	Z = 3.3 K = 1120 #/IN	
50%	Z = 6.0 K = 500 #/IN	Z = 10.0 K = 500 #/IN
75%	Z = 10.0 K = 500 #/IN	
100%	Z = 10.0 K = 500 #/IN	Z = 10.0 K = 500 #/IN

WING OLEO LAT BENDING STIFFNESS (EQUIV. SPRING AT GROUND LINE)

REF. YHC-1A CALCULATIONS

	WING (100% FUEL)	WING (0% FUEL)
0%	K = 12200 #/IN	K = 3200 #/IN
25%	K = 9900 #/IN	
50%	K = 8000 #/IN	K = 3200 #/IN
75%	K = 3200 #/IN	
100%	K = 3200 #/IN	K = 3200 #/IN

EQUIV. LAT. GEAR STIFFNESS (ADDING THE LAT. GEAR AND LAT TIRE SPRINGS AS A SERIES SPRING SYSTEM)

	WING (100% FUEL)	WING (0% FUEL)
0%	$K = \frac{(12000)(2550)}{14750} = 2100$ #/IN	$K = \frac{(3200)(1900)}{(5100)} = 1190$ #/IN.
25%	$K = \frac{(9900)(2450)}{12350} = 1960$ #/IN	
50%	$K = \frac{(8000)(2250)}{10250} = 1760$ #/IN	$K = \frac{(3200)(1750)}{4950} = 1130$ #/IN.
75%	$K = \frac{(3200)(2050)}{5250} = 1250$ #/IN.	
100%	$K = \frac{(3200)(205)}{3450} = 192$ #/IN.	$K = \frac{(3200)(195)}{3395} = 199$ #/IN.

REV

OLEO PROPERTIES - MAIN GEAR

(CONSIDERING THE OLEO CHARACTERISTICS FOR N.G.W. SHOWN ON PAGE A-85)

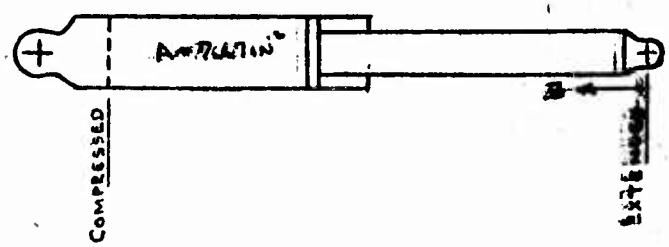

$\rho_1 V_1 = \rho_2 V_2$

FROM CURVE

WT/ OLEO	Z FROM F.E.
3750	8.0"
5500	9.0"

$$\frac{3750}{A}\left[V_0 + A(S-8)\right] = \frac{5500}{A}\left[V_0 + A(S-9)\right]$$

WHERE V_0, COMPRESSED VOLUME
S, OLEO STROKE

$$V_0 + A(S-8) = 1.465\,V_0 + 1.465A(S-9)$$

$$\frac{V_0}{A} + S - 8 = 1.465\frac{V_0}{A} + 1.465S - 13.2$$

$$.465S = +.465\frac{V_0}{A} + 5.2$$

$$S = 11.2 - \frac{V_0}{A}$$

$$\rho V = \rho\left[V_0 + A(S - Z)\right]$$

$$\rho V = \rho\left[V_0 + 11.2A - V_0 - ZA\right]$$

$$\rho V = \rho\left[11.2 - Z\right]A \qquad \rho A = F, \text{ OLEO LOAD}$$

$$\rho V = F\left[11.2 - Z\right]$$

SOLVING FOR ρV

$\rho V = 5500(11.2-9) = 12100$ "IN
$\rho V = 3750(11.2-8) = 12000$ "IN

} OBTAINED FROM OLEO CURVE FOR N.G.W.

REV

Spring Rate

$$K = \frac{\partial F}{\partial Z}$$

$$F = \frac{PV}{11.2-Z}$$

$$\frac{\partial F}{\partial Z} = -\frac{PV(-1)}{(11.2-Z)^2} = +\frac{PV}{(Z^2-22.4\,Z+125.5)}$$

For 0% Airborne $Z = 9.25$

$$K = \frac{12000}{85.6-207+125.5} = \frac{12000}{4.1} = 2930\#/IN$$

For 25% Airborne $Z = 8.75$

$$K = \frac{12000}{76.5-196+125.5} = \frac{12000}{6.0} = 2000\#/IN$$

For 50% Airborne $Z = 7.50$

$$K = \frac{12000}{56.2-168+125.5} = \frac{12000}{13.7} = 875\#/IN$$

For 75% Airborne $Z = 4.0$

$$K = \frac{12000}{16.0-89.6+125.5} = \frac{12000}{51.9} = 231\#/IN$$

For Fully Ext. Oleo $Z = 0$, 83% Airborne

$$K = \frac{12000}{125.5} = 96\#/IN$$

Main Landing Gear Basic Dimensions

Ref. Pages A-17, A-18, A-19

0%

$X_1 = 22.0''$

$X_2 = 33.0''$

$Z_1 = 13.0''$

$Z_2 = 31.0''$

$Z_3 = 84.0''$

$\epsilon_1 = 72.0''$

$\epsilon_s = 64.0''$

$\epsilon_o = 35.0''$

$$L = \left[(x_2 - x_1)^2 + (\epsilon_s - \epsilon_o)^2 + (Z_3 - Z_1)^2\right]^{\frac{1}{2}}$$

$$L = \left[121 + 5040 + 841\right]^{\frac{1}{2}} = 77.4''$$

REV

MAIN LANDING GEAR BASIC DIMENSIONS

25% AIRBORNE

$X_1 = 20.8''$ $\quad \epsilon_1 = 72.0''$
$X_2 = 33.0''$ $\quad \epsilon_5 = 64.0''$
$Z_1 = 13.0''$ $\quad \epsilon_0 = 35.0''$
$Z_2 = 31.3''$
$Z_3 = 84.3''$

$$L = \left[149 + 5080 + 841\right]^{\frac{1}{2}} = 77.9''$$

50%

$X_1 = 19.3''$ $\quad \epsilon_1 = 72.0''$
$X_2 = 33.0''$ $\quad \epsilon_5 = 64.0''$
$Z_1 = 13.0''$ $\quad \epsilon_0 = 35.0''$
$Z_2 = 32.4''$
$Z_3 = 85.3''$

$$L = \left[185 + 5230 + 841\right]^{\frac{1}{2}} = 79.2''$$

75%

$X_1 = 15.8''$
$X_2 = 33.0''$ $\quad \epsilon_1 = 72.0''$
$Z_1 = 13.0''$ $\quad \epsilon_5 = 64.0''$
$Z_2 = 35.4''$ $\quad \epsilon_0 = 35.0''$
$Z_3 = 88.4''$

$$L = \left[296 + 5680 + 841\right]^{\frac{1}{2}} = 82.6''$$

100%

$X_1 = 11.0''$ $\quad \epsilon_1 = 72.0''$
$X_2 = 33.0''$ $\quad \epsilon_5 = 64.0''$
$Z_1 = 13.0''$ $\quad \epsilon_0 = 35.0''$
$Z_2 = 39.0''$
$Z_3 = 92.0''$

$$L = \left[484 + 6250 + 841\right]^{\frac{1}{2}} = 85.0''$$

---

l_0 CALCULATION FOR PROG.

0% AIRBORNE

$$\gamma_1 = \tan^{-1}\frac{X_2 - X_1}{Z_3 - Z_1} = \tan^{-1}\frac{11}{71} = \tan^{-1}.155 = 8.8^\circ$$

$$\gamma_2 = \tan^{-1}\frac{\epsilon_5 - \epsilon_0}{L} = \tan^{-1}\frac{29}{77.4} = \tan^{-1}.375 = 20.6^\circ$$

$\sin\gamma_1 = 0.153$
$\cos\gamma_1 = 0.988$
$\cos\gamma_2 = 0.936$

$$l_0 = \frac{X_1\cos\gamma_1 + (Z_2 - Z_1)\sin\gamma_1}{\cos\gamma_2} = \frac{22(.988) + 18(.153)}{0.936}$$

$$l_0 = \frac{21.7 + 2.8}{0.936} = \frac{24.5}{0.936} = 26.2''$$

REV

MAIN LANDING GEAR PROPERTIES (CONT.)

25% AIRBORNE

$\gamma_1 = \tan^{-1} 12.2/71.3 = \tan^{-1} .171 = 9.7$
$\gamma_2 = \tan^{-1} 29/77.9 = \tan^{-1} .373 = 20.5$

$\sin\gamma_1 = .167$
$\cos\gamma_1 = .986$
$\cos\gamma_2 = .937$

$$l_o = \frac{x_1 \cos\gamma_1 + (z_2 - z_1)\sin\gamma_1}{\cos\gamma_2} = \frac{20.8(.986) + 18.3(.167)}{.937}$$

$$l_o = \frac{20.5 + 3.06}{.937} = \frac{23.7}{.937} = 25.1$$

50% AIRBORNE

$\gamma_1 = \tan^{-1} 13.7/72.3 = \tan^{-1} .189 = 10.8$
$\gamma_2 = \tan^{-1} 29.0/79.2 = \tan^{-1} .366 = 20.1$

$\sin\gamma_1 = .187$
$\cos\gamma_1 = .982$
$\cos\gamma_2 = .939$

$$l_o = \frac{x_1 \cos\gamma_1 + (z_2 - z_1)\sin\gamma_1}{\cos\gamma_2} = \frac{19.3(.982) + 19.4(.187)}{.939}$$

$$l_o = \frac{18.9 + 3.62}{.939} = \frac{22.52}{.939} = 24.0''$$

75%

$\gamma_1 = \tan^{-1} 17.2/75.4 = \tan^{-1} .228 = 12.8°$
$\gamma_2 = \tan^{-1} 29/82.6 = \tan^{-1} .351 = 19.3°$

$\sin\gamma_1 = 0.222$
$\cos\gamma_1 = 0.975$
$\cos\gamma_2 = 0.944$

$$l_o = \frac{x_1 \cos\gamma_1 + (z_2 - z_1)\sin\gamma_1}{\cos\gamma_2} = \frac{15.8(.975) + 22.4(.222)}{0.944}$$

$$l_o = \frac{15.4 + 4.98}{.944} = \frac{20.38}{.944} = 21.6''$$

REV

MAIN LANDING GEAR PROPERTIES (CONT.)

100% AIRBORNE

$\gamma_1 = \tan^{-1} 22/79 = \tan^{-1} .278 = 15.5°$
$\gamma_2 = \tan^{-1} 29/85 = \tan^{-1} .341 = 18.8°$

$\sin\gamma_1 = .267$
$\cos\gamma_1 = .964$
$\cos\gamma_2 = .947$

$$l_0 = \frac{x_1 \cos\gamma_1 + (z_2 - z_1)\sin\gamma_1}{\cos\gamma_2} = \frac{11.0(.964) + 26(.267)}{.947}$$

$$l_0 = \frac{10.6 + 6.95}{.947} = 18.5''$$

REV

7. AERODYNAMIC WING DAMPING TERMS

NUMERICAL VALUES CONSIDERING THE PLANFORM OF THE H-21 CONFIGURATION.

ρ, AIR DENSITY = 0.1147×10^{-6} # SEC^2/IN^4
a_∞, LIFT COEFFICIENT = 5.75
C_o, WING CHORD = 134.4 IN.
ϵ_A, WING OFFSET = 80.0 IN.
L, WING SPAN = 325.0 IN.
V, FORWARD VELOCITY

$$C_{z_i} = \frac{1}{2} \rho a_\infty C_o V$$

$$C_{z_i} = \frac{1}{2} \times 0.1147 \times 10^{-6} \times 5.75 \times 134.4 \times V \times \Delta r_i$$

$$C_{z_i} = 44.2 \times 10^{-6} V \Delta r_i$$

V = 0

$$C_{z_i} = 0$$

V = 20 KNOTS

$$V = 20 \text{ KNOT} \times 1.1516 \frac{\text{M.P.H}}{\text{KNOT}} \times \frac{5280 \times 12 \text{ IN}}{\text{MILE}} \times \frac{\text{HR}}{3600 \text{ SEC}}$$

$$V = 20 \times 20.3 = 406 \text{ IN/SEC}$$

$$C_{z_i} = 44.2 \times 10^{-6} \times 406 = 1.795 \times 10^{-2} \text{ \# SEC/IN}^2$$

V = 40 KNOTS

$$V = 40 \times 20.3 = 812 \text{ IN/SEC}$$

$$C_{z_i} = 44.2 \times 10^{-6} \times 812 = 3.59 \times 10^{-2} \text{ \# SEC/IN}^2$$

V = 60 KNOTS

$$V = 60 \times 20.3 = 1220 \text{ IN/SEC.}$$

$$C_{z_i} = 44.2 \times 10^{-6} \times 1220 = 5.40 \times 10^{-2} \text{ \# SEC/IN}^2$$

V = 80 KNOTS

$$V = 80 \times 20.3 = 1625 \text{ IN/SEC.}$$

$$C_{z_i} = 44.2 \times 10^{-6} \times 1625 = 7.18 \times 10^{-2} \text{ \# SEC/IN}^2$$

REV

AERODYNAMIC WING DAMPING TERMS

$$a_5 = \sum_i C_{zi}(\epsilon_4 + r_i) = C_z \int_0^L (\epsilon_4 + r)^2 \, dr$$

$$= C_z \int_0^L (\epsilon_4^2 + 2\epsilon_4 r + r^2) \, dr = C_z \left[\epsilon_4^2 L + \epsilon_4 L^2 + \frac{L^3}{3} \right]$$

$$= C_z \left[6400(325) + 80(325)^2 + \frac{(325)^3}{3} \right]$$

$$= C_z \left[2.08 + 5.45 + 11.45 \right] \times 10^6$$

$$a_5 = 21.98 \times 10^6 C_z$$

$$a_6 = \sum_i C_{zi}(r_i)^2 = C_z \int_0^L r^2 \, dr$$

$$a_6 = C_z \frac{L^3}{3} = 11.45 \times 10^6 C_z$$

$$a_7 = \sum_i C_{zi} \, Z_{wi}^{(1)\,2}$$

$$a_7 = 155.45 \, C_z$$

FROM WING ANALYSIS

STA	Δr_i	r_i	$Z_{wi}^{(1)}$	$Z_{wi}^{(1)2}$	$r_i Z_{wi}^{(1)}$	$Z_{wi}^{(1)2} \Delta r_i$	$r_i Z_{wi}^{(1)} \Delta r_i$
1	44.5	303	1.000	1.0000	303.00	44.50	13500
2	45.0	258	0.288	.0830	74.20	3.74	3340
3	45.0	213	-0.324	.1050	-69.00	4.72	- 3100
4	11.0	185	-0.616	.3800	-114.00	4.18	- 1255
5	45.0	157	-0.823	.6780	-129.00	30.50	- 5800
6	45.0	112	-0.936	.8760	-105.00	39.50	- 4730
7	45.0	67	-0.743	.5520	- 48.40	24.80	- 2180
8	44.5	22	-0.281	.0790	- 6.19	3.51	- 275

	$Z_{wi} \Delta r_i$
1	44.5
2	12.95
3	- 14.60
4	- 6.79
5	- 37.10
6	- 42.00
7	- 33.40
8	- 12.50

$$\sum_i Z_{wi} \Delta r_i = -88.94$$

$\sum Z_{wi}^{(1)2} \Delta r_i$ = 155.45

$\sum r_i Z_{wi}^{(1)} \Delta r_i$ = -500

REV

AERODYNAMIC WING DAMPING TERMS

$$a_8 = \sum_i C_{zi}(\epsilon_1 + r_i) r_i = C_z \int^L (\epsilon_1 r + r^2)\, dr$$

$$a_8 = C_z \left[\frac{\epsilon_1 L^2}{2} + \frac{L^3}{3} \right]$$

$$a_8 = C_z \left[\frac{80(325)^2}{2} + \right.$$

$$a_8 = C_z \left[4.22 + 11.4 \right.$$

$$a_8 = 15.67 \times 10^6\, C_z$$

$$a_9 = \sum_i C_{zi}(\epsilon_1 + r_i)\, Z_{wi}^{(1)} = C_z \left[\sum_i \epsilon_1 Z_{wi}^{(1)} \Delta r_i + \sum_i r_i Z_{wi} \Delta r_i \right]$$

$$a_9 = C_z \left[80(-88.94) + (-500) \right]$$

$$a_9 = -0.7610 \times 10^4\, C_z$$

$$a_{10} = \sum_i C_{zi}\, r_i\, Z_{wi}^{(1)}$$

$$a_{10} = -500\, C_z$$

$$a_5 = 21.98 \times 10^6\, C_z$$

$$a_6 = 11.45 \times 10^6\, C_z$$

$$a_7 = 155.45\, C_z$$

$$a_8 = 15.67 \times 10^6\, C_z$$

$$a_9 = -0.761 \times 10^4\, C_z$$

$$a_{10} = -500\, C_z$$

REV

AERODYNAMIC WING DAMPING TERMS

V = 20 KNOTS

$a_5 = 21.98 \times 10^6 \times 1.795 \times 10^{-2} = 39.5 \times 10^4$

$a_6 = 11.45 \times 10^6 \times 1.795 \times 10^{-2} = 20.5 \times 10^4$

$a_7 = 155.45 \times 1.795 \times 10^{-2} = 2.79$

$a_8 = 15.67 \times 10^6 \times 1.795 \times 10^{-2} = 28.1 \times 10^4$

$a_9 = -0.761 \times 10^4 \times 1.795 \times 10^{-2} = -1.365 \times 10^2$

$a_{10} = -500 \times 1.795 \times 10^{-2} = -8.98$

V = 40 KNOTS

$a_5 = 21.98 \times 10^6 \times 3.59 \times 10^{-2} = 79.0 \times 10^4$

$a_6 = 11.45 \times 10^6 \times 3.59 \times 10^{-2} = 41.1 \times 10^4$

$a_7 = 155.45 \times 3.59 \times 10^{-2} = 5.55$

$a_8 = 15.67 \times 10^6 \times 3.59 \times 10^{-2} = 56.2 \times 10^4$

$a_9 = -0.761 \times 10^4 \times 3.59 \times 10^{-2} = -2.74 \times 10^2$

$a_{10} = -500 \times 3.59 \times 10^{-2} = -17.9$

V = 60 KNOTS

$a_5 = 21.98 \times 10^6 \times 5.40 \times 10^{-2} = 118.5 \times 10^4$

$a_6 = 11.45 \times 10^6 \times 5.40 \times 10^{-2} = 61.7 \times 10^4$

$a_7 = 155.45 \times 5.40 \times 10^{-2} = 8.39$

$a_8 = 15.67 \times 5.40 \times 10^{-2} \times 10^6 = 84.5 \times 10^4$

$a_9 = -0.761 \times 10^4 \times 5.40 \times 10^{-2} = -4.41 \times 10^2$

$a_{10} = -500 \times 5.40 \times 10^{-2} = -27.0$

REV

AERODYNAMIC WING DAMPING TERMS

V = 80 KNOTS

$a_5 = 21.98 \times 10^6 \times 7.18 \times 10^{-2} = 158 \times 10^4$

$a_6 = 11.45 \times 10^6 \times 7.18 \times 10^{-2} = 82.1 \times 10^4$

$a_7 = 155.45 \times 7.18 \times 10^{-2} = 11.15$

$a_8 = 15.67 \times 10^6 \times 7.18 \times 10^{-2} = 112.5 \times 10^4$

$a_9 = -0.761 \times 10^4 \times 7.18 \times 10^{-2} = -5.46 \times 10^2$

$a_{10} = -500 \times 7.18 \times 10^{-2} = -35.9$

REV

8. WING MASS TERMS (100% FUEL)

NUMERICAL VALUES CONSIDERING THE PLANFORM OF THE H-21 CONFIGURATION

FROM WING ANALYSIS -

STA.	r_i	m_i	$z_{wi}^{(1)}$	r_i^2	$m_i r_i^2$
1	303	2.892	1.000	91900	266000
2	258	2.892	0.288	66500	192000
3	213	2.892	-0.324	45400	131200
4	185	0.463	-0.616	34200	15850
5	157	2.892	-0.823	24600	71100
6	112	2.892	-0.936	12550	36300
7	67	2.892	-0.743	4490	13000
8	22	2.892	-0.281	484	1400

$\Sigma m_i r_i^2 = 726850$

	$z_{wi}^{(1)2}$	$m_i z_{wi}^{(1)2}$	$m_i r_i$	$m_i z_{wi}^{(1)}$	$m_i r_i z_{wi}^{(1)}$
1	1.000	2.892	876.0	2.890	876.0
2	.083	.240	745.0	0.831	217.0
3	.105	.304	616.0	-0.936	-200.0
4	.380	.176	85.5	-0.285	- 52.7
5	.678	1.960	454.0	- 2.380	-374.0
6	.876	2.530	324.0	- 2.700	-304.0
7	.552	1.595	194.0	-2.140	-144.0
8	.078	.228	63.5	-0.814	- 17.8

$\Sigma m_i z_{wi}^{(1)2} = 9.925$ $\Sigma m_i r_i = 3358.0$ $\Sigma m_i r_i z_{wi}^{(1)} \simeq 0$

$\Sigma m_i z_{wi}^{(1)} = -5.534$

$$a_1 = \sum_i m_i r_i^2 = 726850$$

$$a_2 = \sum_i m_i z_{wi}^{(1)2} = 9.925$$

$$a_3 = \sum_i m_i (\epsilon_4 + r_i) r_i = \sum_i m_i \epsilon_4 r_i + \sum_i m_i r_i^2$$

$$a_3 = 80(3358) + 726850 = 268640 + 726850 = 995490$$

$$a_4 = \sum_i m_i (\epsilon_4 + r_i) z_{wi}^{(1)} = \epsilon_4 \sum_i m_i z_{wi}^{(1)} + \sum_i m_i r_i z_{wi}^{(1)}$$

$$a_4 = 80(-5.534) + 136.8 = -442.72 + 0$$

$$a_4 = -442.7$$

REV

WING MASS TERMS (0% FUEL)

THE 'EMPTY' WING MASS TERMS CAN BE OBTAINED FROM THE RATIO OF TOTAL WEIGHTS AS THE MODE SHAPE AND WEIGHT DISTRIBUTION SPANWISE SHAPE ARE SIMILAR.

$$a_{1_{0\%}} = \frac{1000}{8000} a_{1_{100\%}} = \frac{1}{8} \times 726850 = 1908550$$

$$a_{2_{0\%}} = \frac{1000}{8000} a_{2_{100\%}} = \frac{1}{8} \times 9.925 = 1.2405$$

$$a_{3_{0\%}} = \frac{1000}{8000} a_{3_{100\%}} = \frac{1}{8} \times 995190 = 124,450$$

$$a_{4_{0\%}} = \frac{1000}{8000} a_{4_{100\%}} = \frac{1}{8} \times (-442.7) = -55.3$$

REV

9. AERODYNAMIC SPRING (H-21 WING PLANFORM)

$$K_{\alpha W} = \frac{1}{8} \rho \, a_\infty C_o V^2 L^2$$

$\rho = 0.1147 \times 10^{-6}$ #SEC²/IN⁴
$a_\infty = 5.75$
$C_o = 134.4$ IN
$L = 325.0$ IN

$$K_{\alpha W} = \frac{1}{8} \times 0.1147 \times 10^{-6} \times 5.75 \times 134.4 \times (325)^2 \; V^2$$

$K_{\alpha W} = 1.170 \, V^2$ #SEC²/IN

V = 20 KNOTS

$K_{\alpha W} = 1.170 \times (406)^2 = 19.3 \times 10^4$ IN-#/RAD.

V = 40 KNOTS

$K_{\alpha W} = 1.170 \times (812)^2 = 77.2 \times 10^4$ IN-#/RAD.

V = 60 KNOTS

$K_{\alpha W} = 1.170 (1220) = 174 \times 10^4$ IN-#/RAD.

V = 80 KNOTS

$K_{\alpha W} = 1.170 \times (1625)^2 = 309.0 \times 10^4$ IN-#/RAD

REV

10

SIKORSKY S-58(H-34) PARAMETERS

Furnished by

USA TRECOM AERODYNAMIC DIVISION

a. Mass and Geometric Characteristics

b. Blade damper characteristics (pr 3.68 C.P.S. rotor speed)

c. Landing Gear Oleo and Tire Characteristics

d. Blade Mass and Stiffness Distribution

Additional details on Sikorsky S-58(H-34) Structure can be found in TO-1H-34A-3, "Structural Repair Handbook."

REV

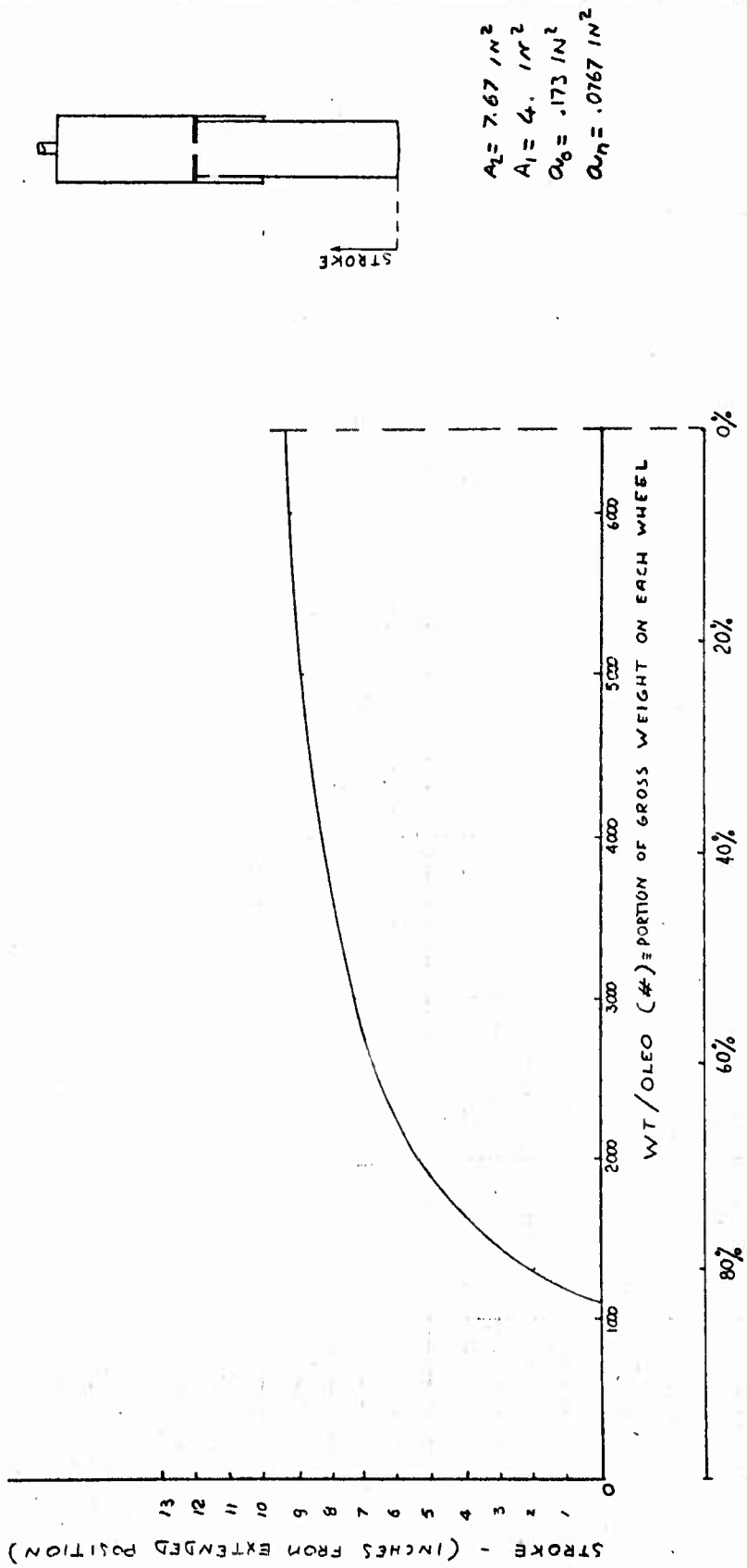

LANDING GEAR OLEO

K_2 = SPRING RATE (#/IN) = SLOPE OF ABOVE CURVE

$\bar{C}_0 = F/v^2 = 1.685$ # SEC²/IN²

REV

a. Mass and Geometric Characteristics

m = blade mass = 230#/386 = .596# sec^2/in.

n = No. of blades = 4 blades

e = drag hinge offset = 12 inches

l = distance from drag hinge to blade center of mass = 116 in.

I_b = blade moment of inertia about lag hinge = 13,553# in $sec.^2$

Ω = rotor speed = 23.14 $\frac{rad.}{sec.}$ = 221 rpm

I_s = ship roll moment of inertia = 5,826 slug $ft.^2$ = 69,912# in $sec.^2$

M = ship mass = 13,300/386 = 34.46# $sec.^2$/in.

s = blade static moment about lag hinge = 2,041.91 ft.# = 63.473# $sec.^2$

W_n = blade pendular frequency about lag hinge = 5.486 $\frac{rad.}{sec.}$ = 52.39 rpm

$\overline{C}_o$ = oleo damping = F/V^2 = 1.6847 $\frac{\#sec.^2}{in.^2}$

REV

b. BLADE DAMPER CHARACTERISTICS

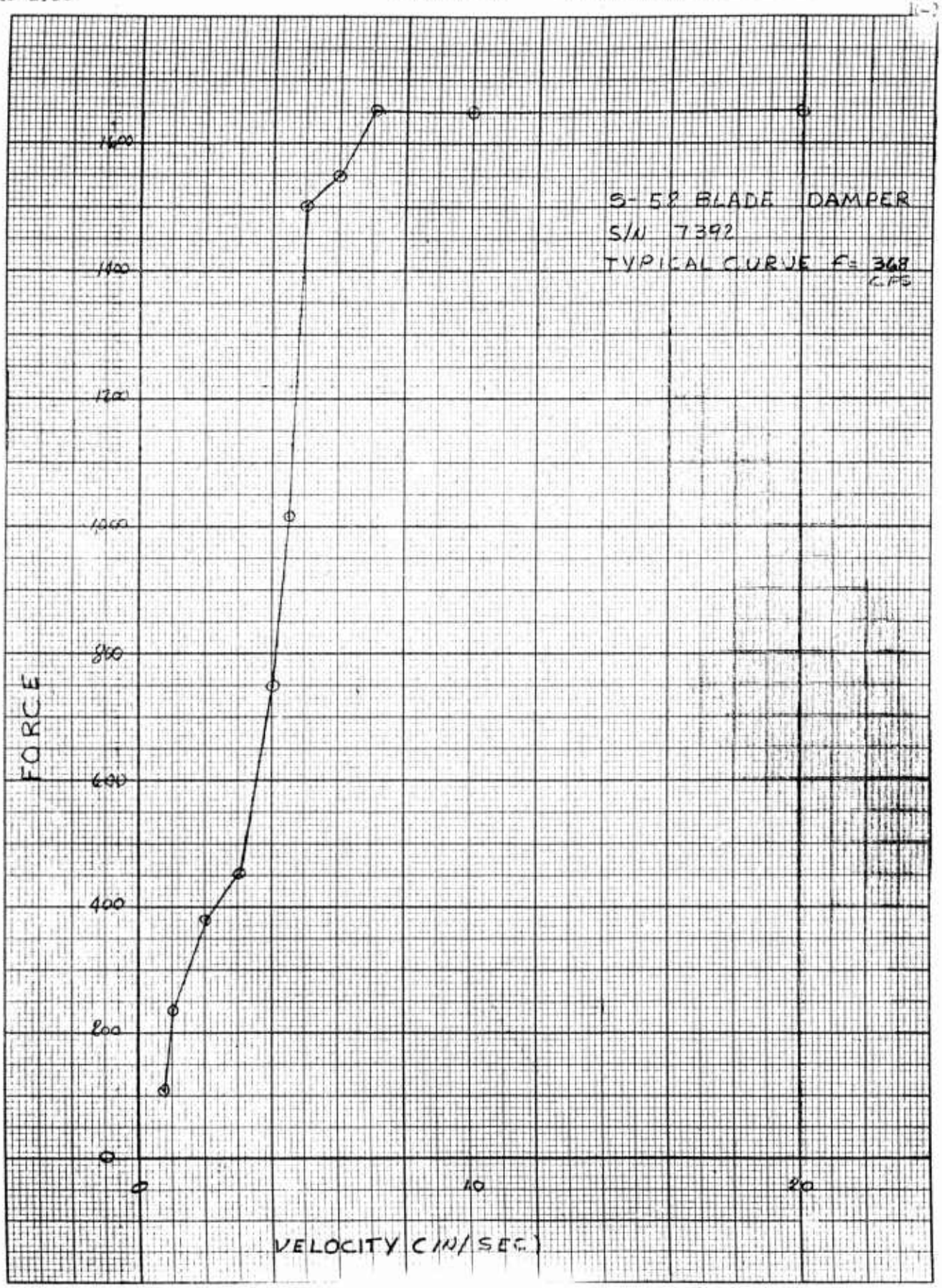

c. Landing Gear and Tire Characteristics

TIRES

Type	MAIN 11.00-12 6 ply Type III Helicopter	TAIL 6.00-6 6 ply Type III Helicopter
Max. width of undeflected tire	11.6"	6.85"
Inflated pressure	45-50	40-45 (28# for floats)
Rated pressure	50 psi (6900#)	42 psi (1750#)

See NACA TN 4110 for determination of vertical and lateral tire spring rates.

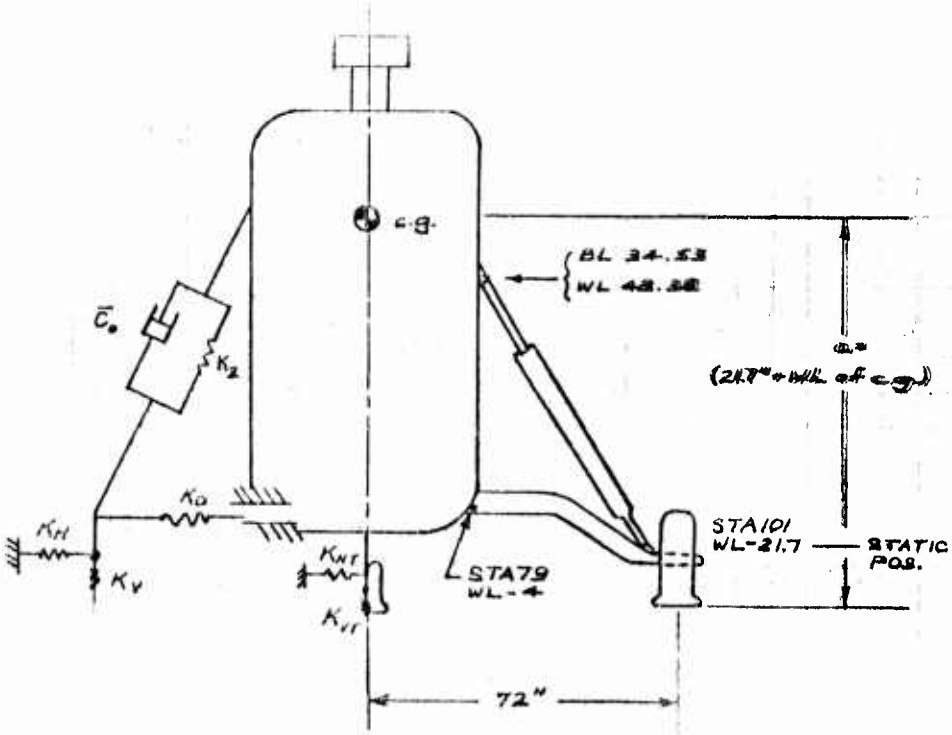

REV

d. BLADE MASS AND STIFFNE

S-

MAIN RO

R = 28'

MASS AND STIF

WEIGHT OF BLADE
BY COMPONENTS

SPAR	92.7#
POCKETS	13.6#
TIP ASS'Y	5.2#
C'WEIGHT	23.3#
CUFF ASS'Y	24.8#
TOTAL	159.6#

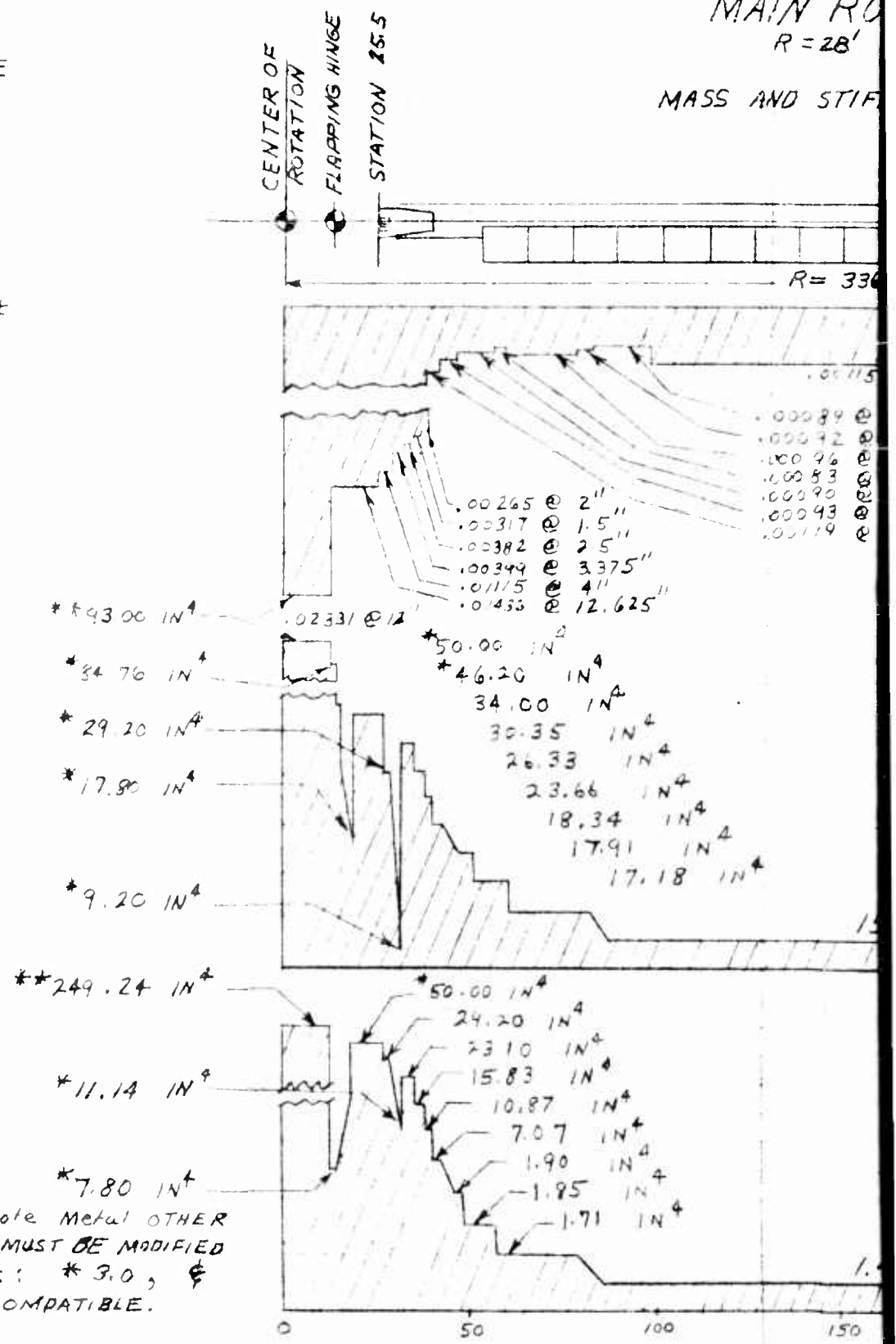

NOTE:
ASTERISK Values Denote Metal OTHER THAN ALUMINUM & MUST BE MODIFIED BY FOLLOWING FACTORS: * 3.0, & ** .625 TO BE COMPATIBLE.

IFFNESS DISTRIBUTION

S-58

W ROTOR BLADE

= 28′ c = 16.4″

STIFFNESS DISTRIBUTION

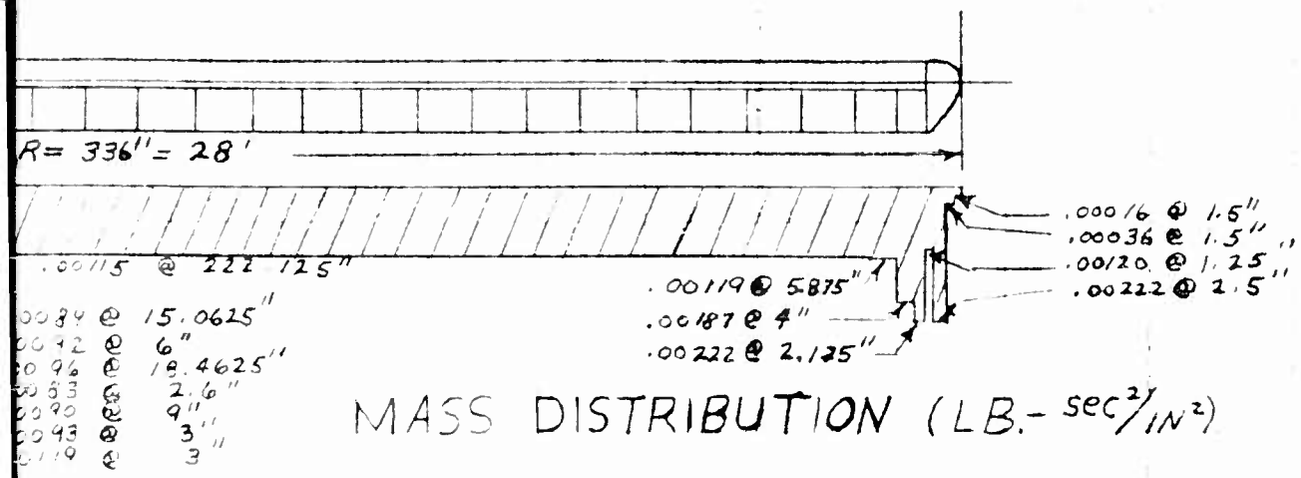

.0084 @ 15.0625″
.0092 @ 6″
.0096 @ 18.4625″
.0053 @ 2.6″
.0090 @ 9″
.0093 @ 3″
.0119 @ 3″

MASS DISTRIBUTION (LB.- sec²/IN²)

MASS DISTRIBUTION IS FOR TOTAL MASS

STIFFNESS IS FOR SPAR AND CUFF ONLY

2

I_{Y-Y}

15.94 IN⁴

I_{X-X}

1.47 IN⁴

150 200 250 300 336 RADIUS ~ INCHES

THE ORIGINAL DOCUMENT HAS A POOR QUALITY. BEST AVAILABLE REPRODUCTION FROM COPY FURNISHED ASTIA.

IBM PROGRAM NO. 169 MECHANICAL INSTABILITY ANALYSIS OF SIKORSKY S-58 HELICOPTER RANGE EXTENSION WITHOUT FLOATING WING FUEL TANKS

BASIC DATA SHEET 1 OF 2

% AIRBORNE, FUSELAGE →			0	25	50	75	100
% AIRBORNE, WINGS →							
FORWARD SPEED, KNOTS →			0	0	0	0	0
% FUEL IN WINGS →							
a_1		101	0				
a_2		102	0				
a_3		103	0				
a_4		104	0				
a_5		105	0				
a_6		106	0				
a_7		107	0				
a_8		108	0				
a_9		109	0				
a_{10}		110	0				
M	LB SEC²/IN	111	24.16				
I_x	LB SEC² IN	112	48950				
K_s	LB/IN	113	2930	2000	875	231	96
C_s	LB/IN/SEC	114	6.8				
K_{t_1}	LB/IN	115	1280	1135	1110	900	90
K_{t_2}	LB/IN	116	2560	2270	2220	1800	180
R_{t_1}	LB/IN	117	0				
R_{t_2}	LB/IN	118	0				
ℓ_0	IN	119	26.2	25.1	24.0	21.6	18.5
ℓ_1	IN	120	0				
ℓ_2	IN	121	0				
ℓ_3	IN	122	82.0	82.4	83.5	86.5	90.0
ξ_0	IN	123	22.0	20.8	19.3	15.8	11.0
ξ_1	IN	124	72.0				
K_F	IN	125	80.0				
ℓ_A	IN	126	0				
T_F	LB	127	0	2325	4650	6975	9300
T_A	LB	128	0				
K_{SW}	LB/IN	129	1.0				
C_{SW}	LB/IN/SEC	130	0				

REV

#3868 #3996

(2)

IBM PROGRAM No. 169 MECHANICAL INSTABILITY ANALYSIS OF SIKORSKY S-58 HELICOPTER RANGE EXTENSION WITHOUT FLOATING WING FUEL TANKS

BASIC DATA SHEET 2 OF 2

% AIRBORNE, FUSELAGE →			0	25	50	75	100
% AIRBORNE, WINGS →							
FORWARD SPEED, KNOTS →			0	0	0	0	0
% FUEL IN WINGS →							
K_{tzR}	LB/IN	131	1.0				
K_{tzW}	LB/IN	132	1.0				
K_{xW}	LB IN/RAD	133	0				
C_{xW}	LB IN/$\frac{RAD}{SEC}$	134	0				
h_2	IN	135	98.7	99.0	99.5	102.5	105.0
h_3	IN	136	72.0	72.3	73.4	76.4	80.0
ℓ_2	IN	137	320				
ℓ_3	IN	138	177				
ℓ_4	IN	139	80				
γ_0	DEG	140	45				
cos γ_0		141	0.7071				
sin γ_0		142	0.7071				
V	IN/SEC	143	0				
Ω	RAD/SEC	144	23.14				
ω_1	RAD/SEC	145	32.07				
$\alpha^{(1)}_{WR}$		146	−0.0184				
$\alpha^{(1)}_{Wq}$		147	+0.0150				
$Z^{(1)}_{Wq}$		148	+0.288				
e_f	IN	149	12.0				
m_f	LB SEC²/IN	150	0.596				
σ_f	LB SEC²	151	63.47				
I_f	LB SEC² IN	152	13553				
k_f	LB IN/RAD	153	0				
P	LB	154	1650				
C	LB/$\frac{IN}{SEC}$	155	0				
r_0	IN	156	6.0				
β_0	RAD	157	0.08727				
ω	RAD/SEC	158	1				
$\Delta\omega$	RAD/SEC	159	1				
ω_L	RAD/SEC	160	50				
No.		161	1				
r = 1 OR 2		74B	1				
r = 3, 4 OR 5		79B	4				

REV

#3868

#3826

IBM PROGRAM No. 169 MECHANICAL INSTABILITY ANALYSIS OF SIKORSKY S-58 HELICOPTER RANGE EXTENSION USING FLOATING WING FUEL TANKS

BASIC DATA SHEET 1 OF 2

		16	17	18	19	20
% AIRBORNE, FUSELAGE →		0	25	50	75	100
% AIRBORNE, WINGS →		0	0	0	0	0
FORWARD SPEED, KNOTS →		0	0	0	0	0
% FUEL IN WINGS →		100	100	100	100	100
a_1	101	726850				
a_2	102	9.925				
a_3	103	995.490				
a_4	104	-442.7				
a_5	105	0				
a_6	106	0				
a_7	107	0				
a_8	108	0				
a_9	109	0				
a_{10}	110	0				
M LB SEC²/IN	111	65.5				
I_x LB SEC² IN	112	2 887 150				
K_s LB/IN	113	2330	2000	875	231	96
C_s LB/(IN/SEC)	114	6.8				
K_{ty} LB/IN	115	1280	1135	1110	900	90
K_{tz} LB/IN	116	2560	2270	2220	1800	180
R_{ty} LB/IN	117	0				
R_{tz} LB/IN	118	0				
ℓ_n IN	119	26.2	25.1	24.0	21.6	18.5
R IN	120	0				
R_a IN	121	0				
R_1 IN	122	50.1	50.8	51.9	54.9	58.1
ℓ_a IN	123	22.0	20.8	19.3	15.8	11.0
ℓ_1 IN	124	72.0				
R_F IN	125	111.6				
R_A IN	126	0				
T_F LB	127	0	2325	4650	6975	9300
T_A LB	128	0				
K_{SW} LB/IN	129	2000				
C_{SW} LB/(IN/SEC)	130	400				

REV

#3863 #3826

(3)

IBM PROGRAM No. 169 MECHANICAL INSTABILITY ANALYSIS OF SIKORSKY S-58 HELICOPTER RANGE EXTENSION USING FLOATING WING FUEL TANKS

BASIC DATA SHEET 2 OF 2

% AIRBORNE, FUSELAGE →			0	25	50	75	100
% AIRBORNE, WINGS →			0	0	0	0	0
FORWARD SPEED, KNOTS →			0	0	0	0	0
% FUEL IN WINGS →			100	100	100	100	100
K_{tyw}	LB/IN	131	2100				
K_{tzw}	LB/IN	132	5100				
$K_{\alpha w}$	LB IN/RAD	133	0				
$C_{\alpha w}$	LB IN/ RAD/SEC	134	0				
h_2	IN	135	67.1	67.4	67.9	70.9	74.4
h_3	IN	136	72.0	72.3	73.4	76.4	80.0
ℓ_2	IN	137	320				
ℓ_3	IN	138	177				
ℓ_4	IN	139	80				
γ_0	DEG	140	45				
$\cos \gamma_0$		141	0.7071				
$\sin \gamma_0$		142	0.7071				
V	IN/SEC	143	0				
Ω	RAD/SEC	144	23.14				
ω_1	RAD/SEC	145	32.07				
$\alpha^{(1)}_{WR}$		146	−0.0184				
$\alpha^{(1)}_{WR,9}$		147	+0.0150				
$Z^{(1)}_{WR,9}$		148	+0.288				
e_f	IN	149	12.0				
m_f	LB SEC²/IN	150	0.596				
σ_f	LB SEC²	151	63.47				
I_f	LB SEC² IN	152	13553				
k_f	LB IN/RAD	153	0				
P	LB	154	1650				
C	LB/ IN/SEC	155	0				
r_0	IN	156	6.0				
β_0	RAD	157	0.08727				
ω	RAD/SEC	158	1				
$\Delta\omega$	RAD/SEC	159	1				
ω_L	RAD/SEC	160	50				
No.		161	1				
r = 1 OR 2		748	1				
n = 3, 4 OR 5		798	4				

REV

#3826 #3868

IBM PROGRAM No. 169 MECHANICAL INSTABILITY ANALYSIS OF SIKORSKY S-58 HELICOPTER RANGE EXTENSION USING FLOATING WING FUEL TANKS #3863

BASIC DATA SHEET 1 OF 2

% AIRBORNE, FUSELAGE →			100	100	100	100	100
% AIRBORNE, WINGS →			0	25	50	75	100
FORWARD SPEED, KNOTS →			0	20	40	60	80
% FUEL IN WINGS →			100	100	100	100	100
			1	2	3	4	5
a_1		101	726.850				
a_2		102	9.925				
a_3		103	995 490				
a_4		104	−442.7				
a_5		105	0	395 000	790 000	1 185 000	1 580 000
a_6		106	0	205 000	411 000	617 000	821 000
a_7		107	0	2.79	5.55	8.39	11.15
a_8		108	0	281 000	562 000	845 000	1 125 000
a_9		109	0	−136.5	−274.0	−441.	−546.
a_{10}		110	0	−8.98	−17.9	−27.0	−35.9
M	LB SEC²/IN	111	65.5				
I_α	LB SEC² IN	112	2 887 150				
K_s	LB/IN	113	96	96	96	96	96
C_s	LB/(IN/SEC)	114	6.8				
K_{ty}	LB/IN	115	90				
K_{tz}	LB/IN	116	180				
k_{ty}	LB/IN	117	0				
k_{tz}	LB/IN	118	0				
ℓ_0	IN	119	18.5				
ℓ	IN	120	0				
ℓ_0	IN	121	0				
ℓ_1	IN	122	58.4				
ℓ_0	IN	123	11.0				
ℓ_1	IN	124	72.0				
R_F	IN	125	111.6				
R_A	IN	126	0				
T_F	LB	127	9300				
T_A	LB	128	0				
$_{SW}$	LB/IN	129	2000	1120	500	500	500
C_{SW}	LB/(IN/SEC)	130	400				

REV

#3828 #3825

IBM PROGRAM No. 169 MECHANICAL INSTABILITY ANALYSIS OF SIKORSKY S-58 HELICOPTER RANGE EXTENSION USING FLOATING WING FUEL TANKS

BASIC DATA SHEET 2 OF 2

% AIRBORNE, FUSELAGE →			100	100	100	100	100
% AIRBORNE, WINGS →			0	25	50	75	100
FORWARD SPEED, KNOTS →			0	20	40	60	80
% FUEL IN WINGS →			100	100	100	100	100
$K_{t_{LN}}$	LB/IN	131	2100	1960	1760	1250	192
$K_{t_{RN}}$	LB/IN	132	5100	4900	4500	4100	410
K_{KN}	LB IN/RAD	133	0	193000	772000	1740000	3090000
C_{KN}	LB IN/RAD/SEC	134	0				
ℓ_2	IN	135	74.4				
ℓ_3	IN	136	80.0				
ε_2	IN	137	320				
ε_3	IN	138	177				
ε_4	IN	139	80				
γ_0	DEG	140	45				
$\cos\gamma_0$		141	0.7071				
$\sin\gamma_0$		142	0.7071				
V	IN/SEC	143	0	406	812	1218	1624
Ω	RAD/SEC	144	23.14				
ω_1	RAD/SEC	145	32.07				
α''_{WA}		146	-0.0184				
α''_{WAS}		147	+0.0150				
Z''_{WAS}		148	+0.288				
ℓ_f	IN	149	12.0				
m_f	LB SEC²/IN	150	0.596				
σ_f	LB SEC²	151	63.47				
I_f	LB SEC² IN	152	13553				
k_f	LB IN/RAD	153	0				
P	LB	154	1650				
C	LB/IN/SEC	155	0				
r_0	IN	156	6.0				
β_0	RAD	157	0.08727				
ω	RAD/SEC	158	1				
$\Delta\omega$	RAD/SEC	159	1				
ω_L	RAD/SEC	160	50				
No.		161	1				
n = 1 OR 2		748	1				
n = 3, 4 OR 5		798	4				

REV

#3828 #3825

IBM PROGRAM No. 169 MECHANICAL INSTABILITY ANALYSIS OF SIKORSKY S-58 HELICOPTER RANGE EXTENSION USING FLOATING WING FUEL TANKS

BASIC DATA SHEET 1 OF 2

		6	7	8	9	10
% AIRBORNE, FUSELAGE →		100	100	100	50	0
% AIRBORNE, WINGS →		100	50	0	0	0
FORWARD SPEED, KNOTS →		80	40	0	0	0
% FUEL IN WINGS →		0	0	0	0	0
a_1	101	90855				
a_2	102	1.241				
a_3	103	124 500				
a_4	104	-55.3				
a_5	105	1 580 000	790 000	0	0	0
a_6	106	821 000	411 000	0	0	0
a_7	107	11.15	5.55	0	0	0
a_8	108	1 125 000	562 000	0	0	0
a_9	109	-546.0	-274.0	0	0	0
a_{10}	110	-35.9	-17.9	0	0	0
M LB SEC²/IN	111	29.3				
I_x LB SEC² IN	112	420 400				
K_s LB/IN	113	96	96	96	875	2930
C_s LB/IN/SEC	114	6.8				
K_{ty} LB/IN	115	90	90	90	1110	1280
K_{tz} LB/IN	116	180	180	180	2220	2560
R_{ty} LB/IN	117	0				
R_{tz} LB/IN	118	0				
ℓ_n IN	119	18.5	18.5	18.5	24.0	26.2
R IN	120	0				
R_a IN	121	0				
R_u IN	122	81.0	81.0	81.0	74.5	73.0
ε_0 IN	123	11.0	11.0	11.0	19.3	22.0
ε_1 IN	124	72.0				
R_E IN	125	89.0				
R_A IN	126	0				
T_E LB	127	9300	9300	9300	4650	0
T_A LB	128	0				
K_{SW} LB/IN	129	500				
C_{SW} LB/IN/SEC	130	400				

REV

#3828 #3826 #3868

IBM PROGRAM No. 169 MECHANICAL INSTABILITY ANALYSIS OF SIKORSKY S-58 HELICOPTER RANGE EXTENSION USING FLOATING WING FUEL TANKS

BASIC DATA SHEET 2 OF 2

THE ORIGINAL DOCUMENT WAS OF POOR QUALITY. BEST POSSIBLE REPRODUCTION FROM COPY FURNISHED ASTIA.

% AIRBORNE, FUSELAGE →			100	100	100	50	0
% AIRBORNE, WINGS →			100	50	0	0	0
FORWARD SPEED, KNOTS →			80	40	0	0	0
% FUEL IN WINGS →			0	0	0	0	0
$K_{t_{1N}}$	LB/IN	131	179	179	179	1130	1190
$K_{t_{2N}}$	LB/IN	132	350	3500	3800	3800	3800
$K_{\alpha N}$	LB IN/RAD	133	3 090 000	772 000	0	0	0
$C_{\alpha N}$	LB IN/RAD/SEC	134	0				
R_2	IN	135	81.3	81.3	81.3	74.8	73.2
R_3	IN	136	80.0	80.0	80.0	73.4	72.0
ℓ_2	IN	137	320				
ℓ_3	IN	138	177				
ℓ_4	IN	139	80				
γ_0	DEG	140	45				
$\cos\gamma_0$		141	0.7071				
$\sin\gamma_0$		142	0.7071				
V	IN/SEC	143	1624	812	0	0	0
	RAD/SEC	144	23.14				
ω	RAD/SEC	145	90.8				
$\alpha_{WR}^{(0)}$		146	-0.0184				
$\alpha_{WR}^{(1)}$		147	+0.0150				
$Z_{WR}^{(1)}$		148	+0.288				
e_f	IN	149	12.0				
m_f	LB SEC²/IN	150	0.596				
δ_f	LB SEC²	151	63.47				
I_f	LB SEC² IN	152	13553				
k_f	LB IN/RAD	153	0				
P	LB	154	1650				
C	LB/IN/SEC	155	0				
r_w	IN	156	6.0				
ζ_w	RAD	157	0.08727				
ω	RAD/SEC	158	1				
$\Delta\omega$	RAD/SEC	159	1				
ω_L	RAD/SEC	160	50				
No.		161	1				
n = 1 OR 2		748	1				
n = 3, 4 OR 5		798	4				

REV

#3868

#3828 #3826

APPENDIX B

1. Air Instability Analysis

REV

APPENDIX B

AIR INSTABILITY ANALYSIS

1. GENERAL

IN THE PRECEDING GROUND INSTABILITY ANALYSIS, THE APPEARANCE OF INSTABILITIES ARE PREDICATED UPON THE EXISTENCE OF REFERENCE FREQUENCIES, THAT IS, NATURAL FREQUENCIES OF THE HELICOPTER ON ITS LANDING GEAR. WHEN THESE NATURAL FREQUENCIES COINCIDE WITH OR ARE IN A BAND CLOSE TO THE WHIRLING NATURAL FREQUENCY OF THE BLADE PATTERN C.G. IN ITS ANTI-SYMMETRIC MODE, THEN AN INSTABILITY CAN APPEAR. IN FLIGHT, THE EXISTENCE OF SIMILAR REFERENCE FREQUENCIES IS DEPENDENT ON THE FLAPPING AERODYNAMICS OF THE ROTOR FOR A CONVENTIONAL HELICOPTER, AND ON ROTOR FLAPPING PLUS WING PRODUCED NATURAL FREQUENCIES IN THE WINGED CONFIGURATION.

TO DEVELOP THE EQUATIONS OF MOTION FOR THE FLIGHT CONFIGURATION FIRST CONSIDER THE ROTOR AIRLOADS.

REV

AIR INSTABILITY ANALYSIS (CONT'D)

2. ROTOR AERODYNAMIC FORCE AND MOMENT ON THE AIRCRAFT C.G.

CONSIDER THE LIFT LOAD ON THE BLADE, T

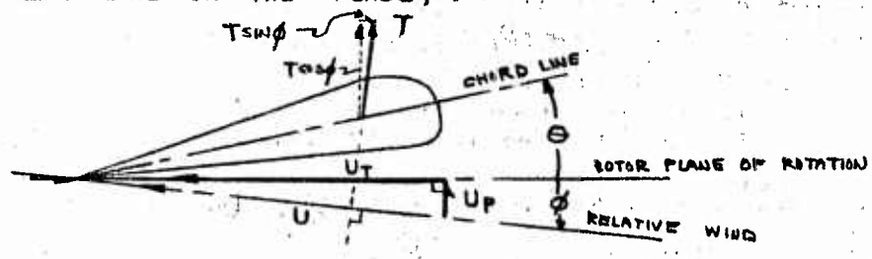

A FLAPPING VIEW SHOWS,

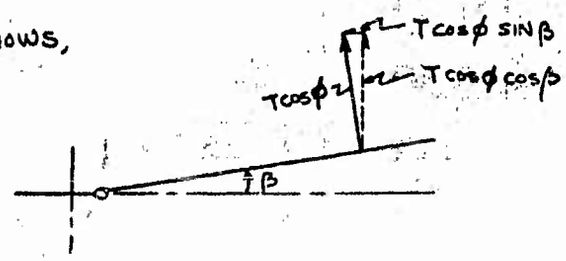

AND IN THE LAG PLANE,

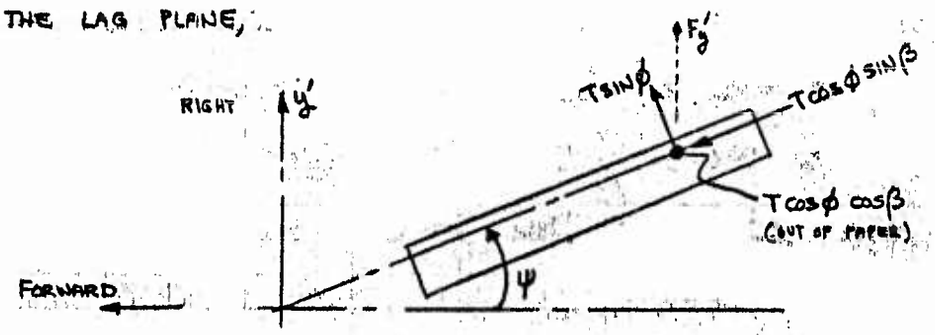

$$F_y' = T \sin\phi \cos\psi - T \cos\phi \sin\beta \sin\psi$$

AND A FRONT ELEVATION,

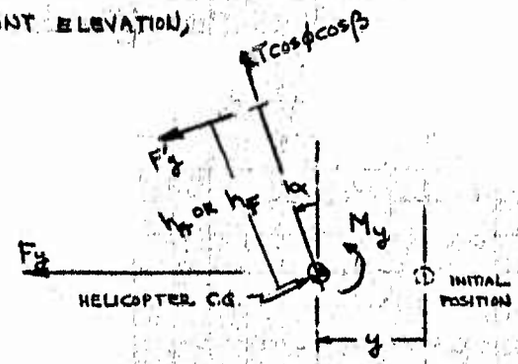

VIEW LOOKING AFT

$$F_y = F_y' \cos\alpha + T \cos\phi \cos\beta \sin\alpha \quad \text{(PER BLADE)}$$

$$M_y = h_A F_y' \quad \text{OR} \quad h_F F_y' \qquad \text{AFT OR FWD ROTOR RESPECTIVELY}$$

REV

AIR INSTABILITY ANALYSIS (CONT'D)

$$F_y = T\sin\phi\cos\psi\cos\alpha - T\cos\phi\sin\beta\sin\psi\cos\alpha + T\cos\phi\cos\beta\sin\alpha$$

ASSUMING SMALL ANGLES, AND TWO IDENTICAL ROTORS FOR THE TANDEM,

$$F_y = T\phi\cos\psi - T\beta\sin\psi + T\alpha \qquad \text{PER BLADE}$$

$$M_y = h_A\left[T\phi\cos\psi - T\beta\sin\psi\right] \qquad \text{AFT ROTOR PER BLADE}$$

$$= h_F\left[T\phi\cos\psi - T\beta\sin\psi\right] \qquad \text{FWD ROTOR PER BLADE}$$

SUMMING THESE LOADS FOR THE THREE BLADES OF EACH ROTOR,

$$F_y = \sum_{K=1}^{3}{}_F\left[T_K\phi_K\cos\psi_K - T_K\beta_K\sin\psi_K + T_K\alpha\right] + \sum_{K=1}^{3}{}_A\left[T_K\phi_K\cos\psi_K - T_K\beta_K\sin\psi_K + T_K\alpha\right]$$

$$M_y = h_F\sum_{K=1}^{3}{}_F\left[T_K\phi_K\cos\psi_K - T_K\beta_K\sin\psi_K\right] + h_A\sum_{K=1}^{3}{}_A\left[T_K\phi_K\cos\psi_K - T_K\beta_K\sin\psi_K\right]$$

LET $T_K = \frac{1}{3}T_F$ FORWARD ROTOR AND $T_K = \frac{1}{3}T_A$ AFT ROTOR

$$F_y = (T_F + T_A)\left\{\alpha - \frac{1}{3}\sum_{K=1}^{3}\left[\beta_K\sin\psi_K - \phi_K\cos\psi_K\right]\right\}$$

$$M_y = -\frac{1}{3}(T_F h_F + T_A h_A)\sum_{K=1}^{3}\left[\beta_K\sin\psi_K - \phi_K\cos\psi_K\right]$$

THE RELATNE AIR VELOCITIES U_T AND U_P AT THE AIRFOIL ARE OBTAINED FROM BLADE ROTATION, FUSELAGE MOTION, ROTOR DOWNWASH AND BLADE FLAPPING.

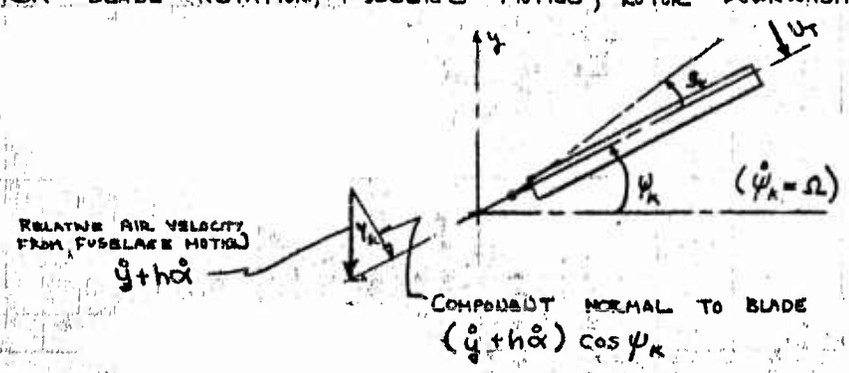

U_T VELOCITY RESULTS FROM BLADE ROTATION AND LAG, AND FUSELAGE MOTION; RESOLVE THE FUSELAGE VELOCITY INTO THE BLADE SYSTEM AS SHOWN.

$$U_T = (e_\beta + r_\beta)\Omega + (\dot{y} + h\dot{\alpha})\cos\psi_K + r_\zeta\dot{\zeta}_K$$

REV

AIR INSTABILITY ANALYSIS (CONT'D)

U_P VELOCITY RESULTS FROM BLADE FLAPPING, FUSELAGE ROLL, A COMPONENT OF HUB LATERAL MOTION ACTING ON THE BLADE BECAUSE OF ITS STEADY CONING ANGLE β_0, AND THE ROTOR DOWNWASH VELOCITY. THE FUSELAGE COMPONENT VELOCITIES ARE MOST APPARENT WHEN THE BLADE IS VIEWED IN ITS 90° AZIMUTH POSITION.

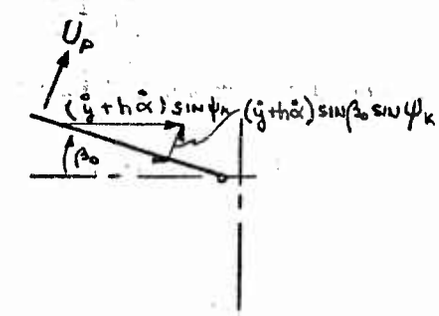

ELEVATION LOOKING AFT

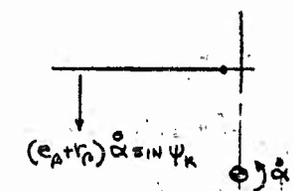

ELEVATION LOOKING AFT

THEN

$$U_P = (\dot{y}+h\dot{\alpha})\sin\beta_0\sin\psi_K - r_\beta\dot{\beta}_K - v + (e_\beta+r_\beta)\dot{\alpha}\sin\psi_K$$

THE ANGLE ϕ BETWEEN THE ROTOR PLANE OF ROTATION AND THE RELATIVE WIND IS USED ABOVE TO OBTAIN A COMPONENT OF THE THRUST IN THE LATERAL DIRECTION. THIS ANGLE IS THE TANGENT OF THE U_P, U_T VELOCITIES.

$$\tan\phi_K = \frac{U_P}{U_T} \quad \text{AND FOR SMALL ANGLES,} \quad \phi_K = \frac{U_P}{U_T}$$

THE VALUES OF U_P AND U_T ARE GIVEN ABOVE, SO THAT

$$\phi_K = \frac{(\dot{y}+h\dot{\alpha})\sin\beta_0\sin\psi_K - r_\beta\dot{\beta}_K - v + (e_\beta+r_\beta)\dot{\alpha}\sin\psi_K}{(e_\beta+r_\beta)\Omega + (\dot{y}+h\dot{\alpha})\cos\psi_K + r_\beta\dot{\delta}_K}$$

SINCE THIS ANGLE IS USED ONLY FOR FORCE RESOLUTION, AND NOT FOR THE CALCULATION OF THRUST MAGNITUDE, IT IS REDUCED TO PERMIT SIMPLIFIED HANDLING ON THE ANALOG COMPUTER BY RETAINING ONLY THE FLAPPING AND ANGULAR ROTATION TERMS.

$$\phi_K = \frac{-r_\beta\dot{\beta}_K}{(e_\beta+r_\beta)\Omega} \quad \text{AND SINCE } e_\beta \ll r_\beta \quad \phi_K = \frac{-\dot{\beta}_K}{\Omega}$$

REV

AIR INSTABILITY ANALYSIS (CONT'D)

USING THIS FORM OF THE ANGLE ϕ THE LATERAL FORCE AND MOMENT EQUATIONS CAN BE WRITTEN,

$$F_y = (T_F + T_A)\left\{\alpha - \frac{1}{3}\sum_{1}^{3}\left[\beta_K \sin\psi_K + \frac{\dot{\beta}_K}{\Omega}\cos\psi_K\right]\right.$$

$$M_y = -\frac{1}{3}(T_F h_F + T_A h_A)\sum_{K=1}^{3}\left[\beta_K \sin\psi_K + \frac{\dot{\beta}_K}{\Omega}\cos\psi_K\right]$$

3. BLADE AERODYNAMIC MOMENT ABOUT THE FLAP HINGE

THE AERODYNAMIC FLAPPING MOMENT ON EACH BLADE $\int r_\beta dT_K$ WILL BE REQUIRED IN THE FLAPPING EQUATION LATER. THIS IS OBTAINED FROM THE THRUST EXPRESSION,

$$dT_K = \frac{1}{2}\rho a_\infty c_0 U^2(\theta_0 + \phi)dr_\beta \qquad \text{but } U_T \approx U$$

$$dT_K = \frac{1}{2}\rho a_\infty c_0 U_T^2\left(\theta_0 + \frac{U_P}{U_T}\right)dr_\beta$$

$$dT_K = \frac{1}{2}\rho a_\infty c_0\left(\theta_0 U_T^2 + U_P U_T\right)dr_\beta$$

AND FROM ABOVE

$$U_T = (e_\beta + r_\beta)\Omega + (\dot{y} + h\dot{\alpha})\cos\psi_K + r_\beta\dot{\xi}_K$$

$$U_P = (\dot{y} + h\dot{\alpha})\sin\beta_0 \sin\psi_K - r_\beta\dot{\beta}_K - v + (e_\beta + r_\beta)\dot{\alpha}\sin\psi_K$$

FORMING THE U_T^2 AND $U_P U_T$ PRODUCT AND SEPARATING, THE FOLLOWING INTEGRATED FLAP MOMENT EQUATION IS OBTAINED FOR THE KTH BLADE.

$$M_\beta = C_1\dot{y}\cos\psi_K + C_2\dot{y}\sin\psi_K + C_3\dot{\alpha}\cos\psi_K + C_4\dot{\alpha}\sin\psi_K + C_5\dot{\beta}_K + C_6\dot{\xi}_K$$

WHERE

$$C_1 = \rho a_\infty c_0 \Omega\theta_0 \int r_\beta(e_\beta + r_\beta)dr_\beta - \frac{1}{2}\rho a_\infty c_0 v\int r_\beta dr_\beta$$

$$C_2 = \frac{1}{2}\rho a_\infty c_0 \Omega\beta_0 \int r_\beta(e_\beta + r_\beta)dr_\beta$$

$$C_3 = h_F C_1 \qquad C_4 = h_F C_2$$

$$C_5 = -\frac{1}{2}\rho a_\infty c_0 \Omega\int r_\beta^2(e_\beta + r_\beta)dr_\beta$$

$$C_6 = \rho a_\infty c_0 \Omega\theta_0 \int r_\beta(e_\beta + r_\beta)(r_\beta - \Delta e)dr_\beta - \frac{1}{2}\rho a_\infty c_0 v\int r_\beta(r_\beta - \Delta e)dr_\beta$$

REV

4. BLADE LAG EQUATIONS OF MOTION

THE LAG MOTION OF EACH BLADE OF AN n BLADED ROTOR IS INITIALLY STATED AS AN INDIVIDUAL LAG COORDINATE FOR EACH BLADE AND AN AZIMUTH COORDINATE DESCRIBING THE BLADE'S LOCATION WITH TIME DUE TO SHAFT ROTATION

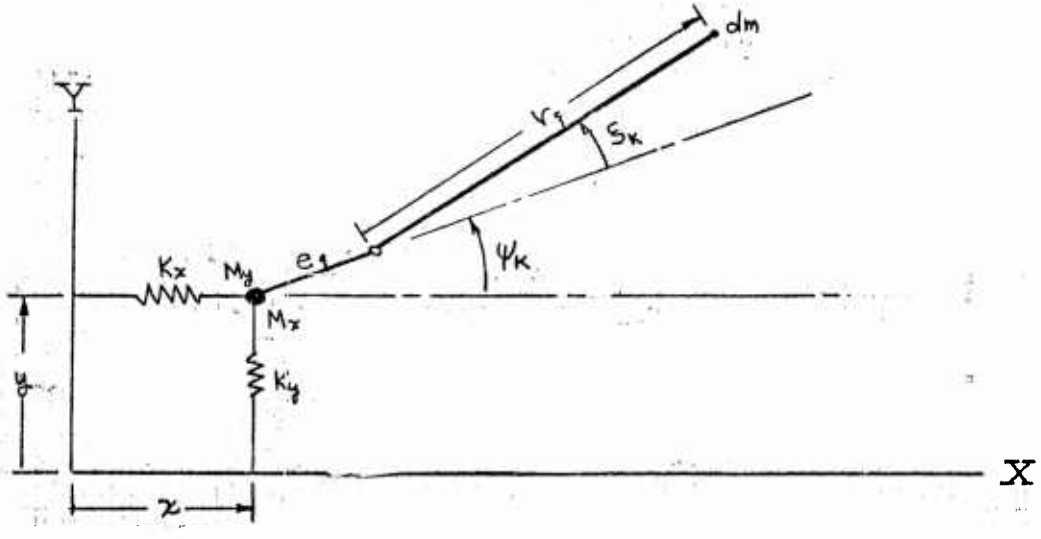

COORDINATES OF THE MASS ELEMENT dm

$$X = x + e_\xi \cos\psi_K + r_\xi \cos(\psi_K + \xi_K)$$

$$Y = y + e_\xi \sin\psi_K + r_\xi \sin(\psi_K + \xi_K)$$

VELOCITIES,

$$\dot{X} = \dot{x} - \dot{\psi}_K e_\xi \sin\psi_K - (\dot{\psi}_K + \dot{\xi}_K) r_\xi \sin(\psi_K + \xi_K)$$

$$\dot{Y} = \dot{y} + \dot{\psi}_K e_\xi \cos\psi_K + (\dot{\psi}_K + \dot{\xi}_K) r_\xi \cos(\psi_K + \xi_K)$$

REV

SQUARING AND SUMMING,

$$\dot{X}^2+\dot{Y}^2 = \dot{x}^2+\dot{\psi}_k^2 e_\zeta^2 \sin^2\psi_k + (\dot{\psi}_k+\dot{\xi}_k)^2 r_\zeta^2 \sin^2(\psi_k+\xi_k) - 2\dot{x}\dot{\psi}_k e_\zeta \sin\psi_k$$
$$-2\dot{x}(\dot{\psi}_k+\dot{\xi}_k) r_\zeta \sin(\psi_k+\xi_k) + 2\dot{\psi}_k(\dot{\psi}_k+\dot{\xi}_k) e_\zeta r_\zeta \sin\psi_k \sin(\psi_k+\xi_k)$$
$$+\dot{y}^2+\dot{\psi}_k^2 e_\zeta^2 \cos^2\psi_k + (\dot{\psi}_k+\dot{\xi}_k)^2 r_\zeta^2 \cos^2(\psi_k+\xi_k) + 2\dot{y}\dot{\psi}_k e_\zeta \cos\psi_k$$
$$+2\dot{y}(\dot{\psi}_k+\dot{\xi}_k) r_\zeta \cos(\psi_k+\xi_k) + 2\dot{\psi}_k(\dot{\psi}_k+\dot{\xi}_k) e_\zeta r_\zeta \cos\psi_k \cos(\psi_k+\xi_k)$$

FOR CONSTANT ROTOR SPEED $\dot{\psi}_k = \Omega$, AND THE KINETIC ENERGY

$$T = \frac{1}{2}\int(\dot{x}^2+\dot{y}^2)\,dm$$

BECOMES

$$2T = M_x\dot{x}^2 + M_y\dot{y}^2$$
$$+\sum_{k=1}^{n}\int\left\{\begin{array}{l}\dot{x}^2+\dot{y}^2+\Omega^2 e_\zeta^2 + (\Omega+\dot{\xi}_k)^2 r_\zeta^2 - 2\dot{x}\Omega e_\zeta \sin\psi_k + 2\dot{y}\Omega e_\zeta\cos\psi_k \\ -2\dot{x}(\Omega+\dot{\xi}_k) r_\zeta \sin(\psi_k+\xi_k) + 2\dot{y}(\Omega+\dot{\xi}_k) r_\zeta \cos(\psi_k+\xi_k) \\ +2\Omega(\Omega+\dot{\xi}_k) e_\zeta r_\zeta[\sin\psi_k \sin(\psi_k+\xi_k) + \cos\psi_k\cos(\psi_k+\xi_k)]\end{array}\right\}dm$$

LET $m = \int dm$ $\quad \sigma = \int r_\zeta dm$ $\quad I = \int r_\zeta^2 dm$

AND REVISE $M_x = M_x + nm$ $\quad M_y = M_y + nm$

$$2T = M_x\dot{x}^2 + M_y\dot{y}^2 + nm\Omega^2 e_\zeta^2$$
$$+\sum_{k=1}^{n}\left\{\begin{array}{l} I(\Omega+\dot{\xi}_k)^2 - 2e_\zeta\Omega m(\dot{x}\sin\psi_k + \dot{y}\cos\psi_k) + 2e_\zeta\sigma\Omega(\Omega+\dot{\xi}_k)\cos\xi_k \\ +2\sigma(\Omega+\dot{\xi}_k)[\dot{y}\cos(\psi_k+\xi_k) - \dot{x}\sin(\psi_k+\xi_k)]\end{array}\right\}$$

<u>POTENTIAL ENERGY</u>

$$2V = K_x x^2 + K_y y^2$$

<u>DISSIPATION FUNCTION</u>

$$2D = C_x\dot{x}^2 + C_y\dot{y}^2 + \sum_{k=1}^{n} C_{\xi_k}\dot{\xi}_k^2$$

REV

$$\frac{\partial T}{\partial \dot{\xi}_k} = \frac{1}{2}\left\{2I(\Omega+\dot{\xi}_k) + 2e_q\sigma\Omega\cos\xi_k + 2\sigma\left[\dot{y}\cos(\psi_k+\xi_k) - \dot{x}\sin(\psi_k+\xi_k)\right]\right\}$$

$$\frac{d}{dt}\frac{\partial T}{\partial \dot{\xi}_k} = I\ddot{\xi}_k - e_q\sigma\Omega\dot{\xi}_k\sin\xi_k + \sigma\begin{bmatrix} -\dot{y}(\dot{\psi}_k+\dot{\xi}_k)\sin(\psi_k+\xi_k) + \ddot{y}\cos(\psi_k+\xi_k) \\ -\dot{x}(\dot{\psi}_k+\dot{\xi}_k)\cos(\psi_k+\xi_k) - \ddot{x}\sin(\psi_k+\xi_k)\end{bmatrix}$$

$$\frac{\partial T}{\partial \xi_k} = \frac{1}{2}\left\{-2e_q\sigma\Omega(\Omega+\dot{\xi}_k)\sin\xi_k + 2\sigma(\Omega+\dot{\xi}_k)\left[-\dot{y}\sin(\psi_k+\xi_k) - \dot{x}\cos(\psi_k+\xi_k)\right]\right\}$$

$$= -e_q\sigma\Omega(\Omega+\dot{\xi}_k)\sin\xi_k - \sigma\left[\dot{y}(\Omega+\dot{\xi}_k)\sin(\psi_k+\xi_k) + \dot{x}(\Omega+\dot{\xi}_k)\cos(\psi_k+\xi_k)\right]$$

$$\frac{\partial V}{\partial \xi_k} = 0 \qquad \frac{\partial D}{\partial \dot{\xi}_k} = \frac{1}{2}2C_{\xi_k}\dot{\xi}_k$$

SUBSTITUTE IN LAGRANGE EQUATION,

$$\frac{d}{dt}\frac{\partial T}{\partial \dot{\xi}_k} - \frac{\partial T}{\partial \xi} + \frac{\partial V}{\partial \xi} + \frac{\partial D}{\partial \dot{\xi}} = 0$$

$$I\ddot{\xi}_k - e_q\sigma\Omega\dot{\xi}_k\sin\xi_k + \sigma\left[\ddot{y}\cos(\psi_k+\xi_k) - \ddot{x}\sin(\psi_k+\xi_k)\right]$$
$$-\sigma\left[\dot{y}(\Omega+\dot{\xi}_k)\sin(\psi_k+\xi_k) + \dot{x}(\Omega+\dot{\xi}_k)\cos(\psi_k+\xi_k)\right] + e_q\sigma\Omega(\Omega+\dot{\xi}_k)\sin\xi_k$$
$$+\sigma\left[\dot{y}(\Omega+\dot{\xi}_k)\sin(\psi_k+\xi_k) + \dot{x}(\Omega+\dot{\xi}_k)\cos(\psi_k+\xi_k)\right] + C_{\xi_k}\dot{\xi}_k = 0$$

OR

$$I\ddot{\xi}_k + C_{\xi_k}\dot{\xi}_k + e_q\sigma\Omega^2\sin\xi_k = \sigma\left[\ddot{x}\sin(\psi_k+\xi_k) - \ddot{y}\cos(\psi_k+\xi_k)\right]$$

x EQUATION:

$$\frac{\partial T}{\partial \dot{x}} = \frac{1}{2}\sum_{k=1}^{n}\left\{-2e_q\Omega m\sin\psi_k - 2\sigma(\Omega+\dot{\xi}_k)\sin(\psi_k+\xi_k)\right\} + M_x\dot{x}$$

$$\frac{d}{dt}\frac{\partial T}{\partial \dot{x}} = M\ddot{x} - \frac{d}{dt}\sum_{k=1}^{n}\left\{e_q\Omega m\sin\psi_k + \sigma(\Omega+\dot{\xi}_k)\sin(\psi_k+\xi_k)\right\}$$

$$\frac{\partial T}{\partial x} = 0 \qquad \frac{\partial V}{\partial x} = Kx \qquad \frac{\partial D}{\partial \dot{x}} = C_x\dot{x}$$

REV

$$M_x\ddot{x} + C_x\dot{x} + K_x x = \frac{d}{dt}\sum_{k=1}^{n}\left[e_q\Omega m\sin\psi_k + \sigma(\Omega+\dot{\xi}_k)\sin(\psi_k+\xi_k)\right]$$

DISCARD THE CONSTANT TERM,

$$M_x\ddot{x} + C_x\dot{x} + K_x x = \sigma\frac{d}{dt}\sum_{k=1}^{n}(\Omega+\dot{\xi}_k)\sin(\psi_k+\xi_k)$$

EXPAND THE TERM ON THE RIGHT,

$$M_x \ddot{x} + C_x \dot{x} + K_x x = \sigma \frac{d}{dt} \sum_{k=1}^{n} (\Omega + \dot{\xi}_k)\left[\sin\psi_k \cos\xi_k + \cos\psi_k \sin\xi_k\right]$$

ASSUME SMALL ANGLES $\sin\xi_k = \xi_k$, $\cos\xi_k = 1$

$$M_x \ddot{x} + C_x \dot{x} + K_x x = \sigma \frac{d}{dt} \sum_{k=1}^{n} (\Omega + \dot{\xi}_k)\left[\sin\psi_k + \xi_k \cos\psi_k\right]$$

$$= \sigma \frac{d}{dt} \sum_{k=1}^{n} \left[\Omega \sin\psi_k + \Omega \xi_k \cos\psi_k + \dot{\xi}_k \sin\psi_k + \dot{\xi}_k \xi_k \cos\psi_k\right]$$

DISCARD THE CONSTANT TERM AND THE SECOND ORDER PRODUCT,

$$M_x \ddot{x} + C_x \dot{x} + K_x x = \sigma \frac{d}{dt} \sum_{k=1}^{n} \left[\Omega \xi_k \cos\psi_k + \dot{\xi}_k \sin\psi_k\right]$$

NOW NOTE THAT,

$$\frac{d}{dt} \xi_k \sin\psi_k = \Omega \xi_k \cos\psi_k + \dot{\xi}_k \sin\psi_k$$

SO THAT,

$$M_x \ddot{x} + C_x \dot{x} + K_x x = \sigma \frac{d^2}{dt^2} \sum_{k=1}^{n} \xi_k \sin\psi_k$$

SIMILAR OPERATIONS ON y WILL GIVE

$$M_y \ddot{y} + C_y \dot{y} + K_y y = -\sigma \frac{d^2}{dt^2} \sum_{k=1}^{n} \xi_k \cos\psi_k$$

SUMMARIZING THESE EQUATIONS OF MOTION,

$$M_x \ddot{x} + C_x \dot{x} + K_x x = \sigma \frac{d^2}{dt^2} \sum_{k=1}^{n} \xi_k \sin\psi_k$$

$$M_y \ddot{y} + C_y \dot{y} + K_y y = -\sigma \frac{d^2}{dt^2} \sum_{k=1}^{n} \xi_k \cos\psi_k$$

$$I \ddot{\xi}_k + C_{\xi_k} \dot{\xi}_k + e\sigma\Omega^2 \xi_k = \sigma\left[\ddot{x} \sin(\psi_k + \xi_k) - \ddot{y} \cos(\psi_k + \xi_k)\right]$$

REV

FOR THE PRESENT APPLICATION ONLY LATERAL AND ROLL MOTION OF THE HELICOPTER ARE CONSIDERED SO THAT LONGITUDINAL EQUATION x MAY BE DROPPED. THE LATERAL EQUATION IN y REPRESENTS AN EFFECTIVE MASS, SPRING AND DAMPER AT THE ROTOR HUB ON THE LEFT SIDE OF THE EQUATION, AND AN INERTIA FORCE IMPOSED BY THE WHIRLING BLADES ON THE FIXED SYSTEM y COORDINATE. THE EFFECTNE TERMS WILL NOT BE USED HERE ANY FURTHER BECAUSE ACTUAL AIRCRAFT EQUATIONS ABOUT THE C.G. WILL BE DEVELOPED IN SECTION B-6 SO THAT EFFECTNE QUANTITIES WILL NOT BE NECESSARY.

HOWEVER THE INERTIA FORCE TERM $-\sigma \frac{d^2}{dt^2} \sum_{k=1}^{n} \zeta_k \cos \psi_k$ WILL BE USED AS AN APPLIED FORCE ON THE AIRCRAFT EQUATIONS OF MOTION IN SECTION B-7.

THE BLADE LAG EQUATION ζ_k WILL BE USED IN THE FINAL SET OF EQUATIONS, EXCEPT THAT AN ADDITIONAL TERM REPRESENTING CORIOLIS ACCELERATION DUE TO FLAP MUST BE ADDED.

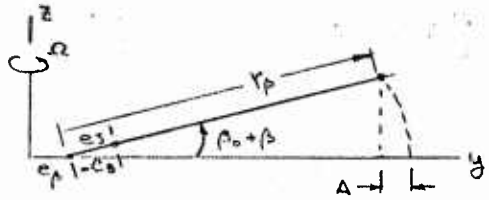

ELEVATION VIEW

FLAP FORESHORTENING OF INDIVIDUAL MASS RADII PRODUCE CORIOLIS ACCELERATION IN THE LAG DIRECTION.

$$\Delta = r_\beta \left[1 - \cos(\beta_0 + \beta)\right]$$

$$\dot{\Delta} = r_\beta (\dot{\beta}_0 + \dot{\beta}) \sin(\beta_0 + \beta)$$

but $\dot{\beta}_0 = 0$

$$\dot{\Delta} = r_\beta \dot{\beta} \sin(\beta_0 + \beta)$$

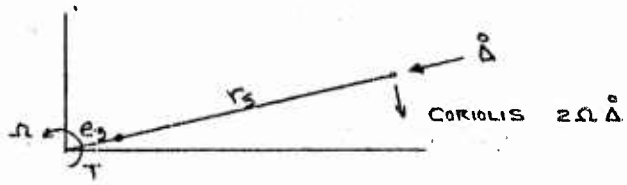

PLAN VIEW

FOR POSITIVE β (FLAP UP) $\dot{\Delta}$ IS DIRECTED TOWARD THE CENTER OF ROTATION, AND THE CORIOLIS ACCELERATION ACTS IN THE LAG PLANE AGAINST THE DIRECTION OF ROTATION. THE TORQUE ABOUT THE LAG HINGE IS

$$T = -\int 2\dot{\Delta}\Omega r_s \, dm = -\int 2\Omega r_\beta \dot{\beta} \sin(\beta_0 + \beta) r_s \, dm$$

BUT $r_\beta = r_s + e_s - e_\beta = r_s + \Delta e$ WHERE $\Delta e = e_s - e_\beta$

$$T = -\int 2\Omega (r_s + \Delta e) r_s \dot{\beta} \sin(\beta_0 + \beta) dm = -2\Omega \dot{\beta} (\beta_0 + \beta) \left[I_s + \Delta e \sigma_s\right]$$

$\dot{\beta}\beta$ IS SECOND ORDER ∴

$$T = -2\Omega \dot{\beta} \beta_0 \left[I_s + \Delta e \sigma_s\right]$$

REV

THE LAG EQUATION INCLUDING CORIOLIS TORQUE BECOMES,

$$I_\zeta \ddot{\zeta}_K + C_{\zeta K}\dot{\zeta}_K + e\sigma\Omega^2 \zeta_K - 2\Omega\beta_0\dot{\beta}\left[I_\zeta + \Delta e \sigma_\zeta\right] = \sigma\left[\ddot{x}\sin(\psi_K+\zeta_K) - \ddot{y}\cos(\psi_K+\zeta_K)\right]$$

THIS EXPRESSION MAY BE FURTHER REDUCED BY NOTING THAT x MOTION WILL NOT BE USED IN THE ANALYSIS AND THAT THE COS TERM MAY BE EXPANDED.

$$\ddot{y}\cos(\psi_K+\zeta_K) = \ddot{y}\cos\psi_K\cos\zeta_K - \ddot{y}\sin\psi_K\sin\zeta_K$$

FOR SMALL ANGLES $\cos\zeta_K = 1$, $\sin\zeta_K = \zeta_K$

$$\ddot{y}\cos(\psi_K+\zeta_K) = \ddot{y}\cos\psi_K - \ddot{y}\,\zeta_K\sin\psi_K$$

BUT $\ddot{y}\,\zeta_K$ IS SECOND ORDER AND MAY BE NEGLECTED

FINALLY THE LAG EQUATION IS,

$$I_\zeta \ddot{\zeta}_K + C_{\zeta K}\dot{\zeta}_K + e\sigma\Omega^2 \zeta_K - 2\Omega\beta_0\dot{\beta}\left[I_\zeta + \Delta e \sigma_\zeta\right] = -\sigma_\zeta\,\ddot{y}\cos\psi_K$$

AND THE LATERAL HUB EQUATION

$$M_y\ddot{y} + C_y\dot{y} + K_y y = -\sigma\frac{d^2}{dt^2}\sum_{K=1}^{n}\zeta_K\cos\psi_K$$

REV

5. BLADE FLAP EQUATION OF MOTION

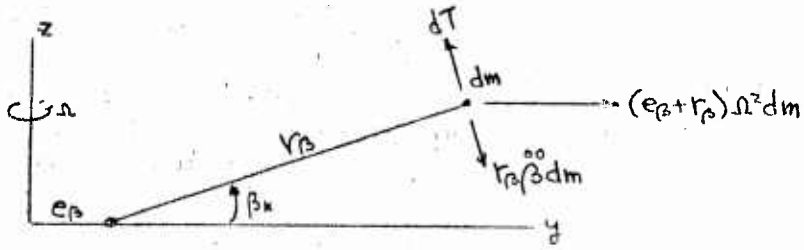

SUMMING MOMENTS ABOUT THE FLAP HINGE,

$$\int r_\beta dT - \int r_\beta^2 \ddot{\beta}_K dm - \int (e_\beta + r_\beta)\Omega^2 dm \, r_\beta \sin\beta_K = 0$$

LET $I_\beta = \int r_\beta^2 dm$ $\qquad \sigma_\beta = \int r_\beta dm$

THEN

$$I_\beta \ddot{\beta}_K + (e_\beta \sigma_\beta + I_\beta)\Omega^2 \beta_K = \int r_\beta dT$$

THE AERODYNAMIC MOMENT $M_\beta = \int r_\beta dT$ WAS SHOWN IN SECTION B-3 PAGE TO BE

$$M_\beta = C_1 \dot{y} \cos\psi_K + C_2 \dot{y} \sin\psi_K + C_3 \dot{\alpha} \cos\psi_K + C_4 \dot{\alpha} \sin\psi_K + C_5 \dot{\beta}_K + C_6 \dot{\xi}_K$$

THE FLAPPING EQUATION IS NOW,

$$I_\beta \ddot{\beta}_K + (e_\beta \sigma_\beta + I_\beta)\Omega^2 \beta_K = C_1 \dot{y} \cos\psi_K + C_2 \dot{y} \sin\psi_K + C_3 \dot{\alpha} \cos\psi_K + C_4 \dot{\alpha} \sin\psi_K + C_5 \dot{\beta}_K + C_6 \dot{\xi}_K$$

REV

6. HELICOPTER AND WING EQUATIONS OF MOTION

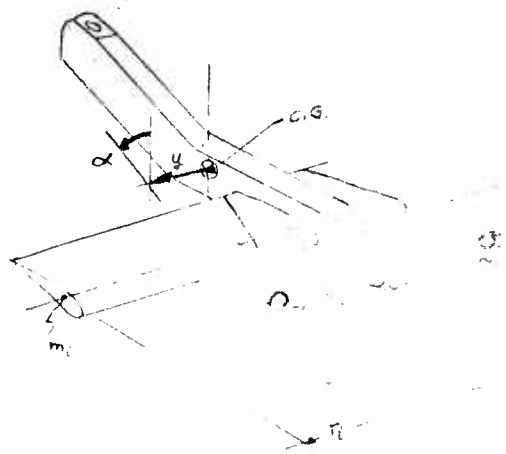

LET M = TOTAL MASS OF HELICOPTER, WINGS AND BLADES

I_H = ROLL INERTIA OF HELICOPTER AND BLADES ABOUT C.G.

$K_{\alpha w}$ = AERODYNAMIC SPRING OF WING ABOUT HINGE

$C_{\alpha w}$ = MECHANICAL WING DAMPER ABOUT HINGE

$\bar{C}_{\alpha w}$ = AERODYNAMIC WING DAMPER ABOUT HINGE

WING MASS VERTICAL DISPLACEMENT

$$Z_i = (\varepsilon_4 + r_i)\alpha + r_i \alpha_w \cos\gamma_0$$

VELOCITY

$$\dot{Z}_i = (\varepsilon_4 + r_i)\dot{\alpha} + r_i \dot{\alpha}_w \cos\gamma_0$$

KINETIC ENERGY

$$T = \frac{1}{2} M \dot{y}^2 + \frac{1}{2} I_H \dot{\alpha}^2 + \frac{1}{2} 2 \sum_{i=1}^{n} \left[(\varepsilon_4 + r_i)\dot{\alpha} + r_i \dot{\alpha}_w \cos\gamma_0\right]^2 m_i$$

$$T = \frac{1}{2} M \dot{y}^2 + \frac{1}{2} I_H \dot{\alpha}^2 + \sum_{i=1}^{n} (\varepsilon_4 + r_i)^2 m_i \dot{\alpha}^2 + 2\sum_{i=1}^{n} (\varepsilon_4 + r_i) r_i m_i \dot{\alpha}\dot{\alpha}_w \cos\gamma_0 + \sum r_i^2 \cos^2\gamma_0 m_i \dot{\alpha}_w^2$$

LET $I_\alpha = I_H + 2\sum_{i=1}^{n} (\varepsilon_4 + r_i)^2 m_i$ TOTAL ROLL INERTIA OF HELICOPTER, BLADES AND WINGS ABOUT HELICOPTER C.G.

$$T = \frac{1}{2} M \dot{y}^2 + \frac{1}{2} I_\alpha \dot{\alpha}^2 + 2\sum_{i=1}^{n} (\varepsilon_4 + r_i) r_i m_i \cos\gamma_0 \dot{\alpha}\dot{\alpha}_w + \sum r_i^2 \cos^2\gamma_0 m_i \dot{\alpha}_w^2$$

REV

POTENTIAL ENERGY $V = \frac{1}{2} 2 K_{\alpha w} \alpha_w^2$

DISSIPATION FUNCTION $D = \frac{1}{2} 2 \bar{C}_{\alpha w} \dot{\alpha}_w^2 + \frac{1}{2} 2 C_{\alpha w} \dot{\alpha}_w^2$

$$\frac{d}{dt}\frac{\partial T}{\partial \dot{y}} = M\ddot{y} \qquad \frac{\partial T}{\partial y} = 0 \qquad \frac{\partial V}{\partial y} = 0 \qquad \frac{\partial D}{\partial \dot{y}} = 0$$

$$\frac{d}{dt}\frac{\partial T}{\partial \dot{\alpha}} = I_\alpha \ddot{\alpha} + 2\sum_{i=1}^{n}(\varepsilon_4 + r_i) r_i m_i \ddot{\alpha}_w \cos\gamma_0 \qquad \frac{\partial T}{\partial \alpha} = 0 \qquad \frac{\partial V}{\partial \alpha} = 0 \qquad \frac{\partial D}{\partial \dot{\alpha}} = 0$$

$$\frac{d}{dt}\frac{\partial T}{\partial \dot{\alpha}_w} = 2\sum_{i=1}^{n}(\varepsilon_4 + r_i) r_i m_i \cos\gamma_0 \ddot{\alpha} + 2\sum_{i=1}^{n} r_i^2 \cos^2\gamma_0 m_i \ddot{\alpha}_w \qquad \frac{\partial V}{\partial \alpha_w} = 2 K_{\alpha w} \alpha_w$$

$$\frac{\partial D}{\partial \dot{\alpha}_w} = 2\bar{C}_{\alpha w}\dot{\alpha}_w + 2 C_{\alpha w}\dot{\alpha}_w$$

EQUATIONS OF MOTION

y: $\quad M\ddot{y} = 0$

α: $\quad I_\alpha \ddot{\alpha} + 2\sum_{i=1}^{n}(\varepsilon_4 + r_i) r_i m_i \cos\gamma_0 \ddot{\alpha}_w = 0$

α_w: $\quad \sum_{i=1}^{n}(\varepsilon_4 + r_i) r_i m_i \cos\gamma_0 \ddot{\alpha} + \sum_{i=1}^{n} r_i^2 \cos^2\gamma_0 m_i \ddot{\alpha}_w + K_{\alpha w}$

REV

AERODYNAMIC WING SPRING

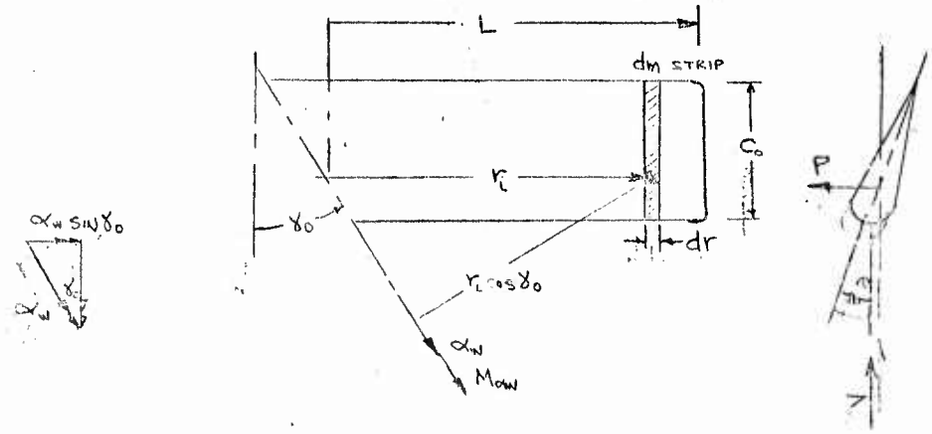

ELEMENTAL LIFT OF STRIP

$$dP = \frac{1}{2}\rho a_\infty C_o V^2 \theta \, dr$$

HINGE MOMENT

$$dM_{\alpha w} = (r\cos\gamma_o)\,dP = \frac{1}{2}\rho a_\infty C_o V^2 \theta \, r\cos\gamma_o \, dr$$

$$M_{\alpha w} = \frac{1}{4}\rho a_\infty C_o V^2 L^2 \cos\gamma_o \, \theta$$

BLADE ELEMENT ANGLE OF ATTACK IS A FUNCTION OF α_w

$$\theta = -\alpha_w \sin\gamma_o$$

$$M_{\alpha w} = -\frac{1}{4}\rho a_\infty C_o V^2 L^2 \sin\gamma_o \cos\gamma_o \, \alpha_w$$

THIS IS A NEGATIVE MOMENT ON THE RIGHT SIDE OF THE WING FLAPPING EQUATION. IT CAN BE MOVED TO THE LEFT SIDE OF THE EQUATION AND BE CONSIDERED A SPRING TERM IN α_w. THUS WHEN THE WING FLAPS UP THE LIFT REDUCES AND TENDS TO RETURN IT TO ITS INITIAL POSITION.

$$K_{\alpha w} = \frac{1}{4}\rho a_\infty C_o V^2 L^2 \sin\gamma_o \cos\gamma_o$$

FOR γ_o AS IN THE PRESENT WING,

$$K_{\alpha w} = \frac{1}{8}\rho a_\infty C_o V^2 L^2$$

REV

AERODYNAMIC WING DAMPER

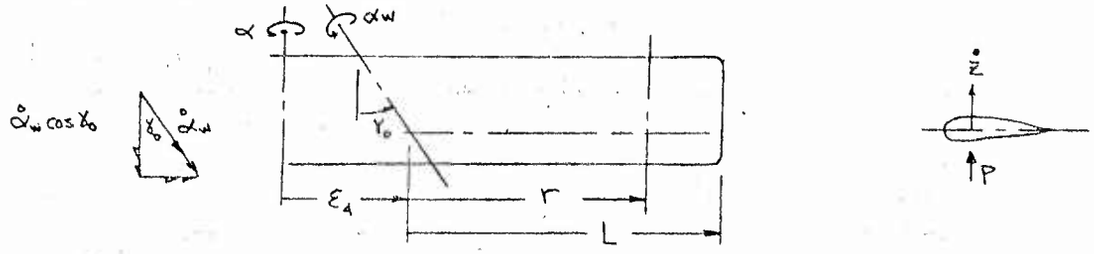

THE AERODYNAMIC DAMPING FORCE P IS EXPRESSED BY

$$P = -2\pi\rho v b C \dot{h} \quad \text{PER UNIT SPAN}$$

THIS IS A PORTION OF THE AERODYNAMIC LIFT FORCE GIVEN BY THEODORSEN IN NACA REPORT 496. IT IS THE PORTION WHICH IS A FUNCTION OF VERTICAL VELOCITY $\dot{h}$. CONVERTING TO THE PRESENT TERMINOLOGY,

$a_\infty = 2\pi$ SLOPE OF THE LIFT CURVE
$C_0 = 2b$ WING CHORD LENGTH
$V = v$ WING AIRSPEED
$\rho = \rho$ AIR DENSITY
$\dot{z} = \dot{h}$ VERTICAL VELOCITY
$C = F + iG = 1$ FOR QUASI-STATIC AERODYNAMICS

$$\therefore P = -\tfrac{1}{2} a_\infty \rho V C_0 \dot{z} \quad \text{PER UNIT SPAN}$$

$$\text{OR,} \quad dP = -\tfrac{1}{2} a_\infty \rho V C_0 \dot{z}\, dr \quad \text{PER SPAN LENGTH } dr$$

VERTICAL VELOCITY $\dot{z} = (\varepsilon_4 + r)\dot{\alpha} + r\dot{\alpha}_w \cos\gamma_0$

DAMPING MOMENT ABOUT HINGE $\dfrac{M_{\alpha w}}{\cos\gamma_0} = \int_0^L r\, dP$

$$\frac{M_{\alpha w}}{\cos\gamma_0} = \int_0^L r\left[-\tfrac{1}{2}\rho a_\infty V C_0\right]\left[(\varepsilon_4 + r)\dot{\alpha} + r\dot{\alpha}_w \cos\gamma_0\right] dr$$

$$\frac{M_{\alpha w}}{\cos\gamma_0} = \left[-\tfrac{1}{2}\rho a_\infty V C_0 \int_0^L r(\varepsilon_4 + r)\, dr\right]\dot{\alpha} - \left[\tfrac{1}{2}\rho a_\infty V C_0 \cos\gamma_0 \int_0^L r^2 dr\right]\dot{\alpha}_w$$

$$\frac{M_{\alpha w}}{\cos\gamma_0} = -\tfrac{1}{2}\rho a_\infty V C_0 L^2\left[\tfrac{1}{2}\varepsilon_4 + \tfrac{1}{3}L\right]\dot{\alpha} - \tfrac{1}{2}\rho a_\infty V C_0 \cos\gamma_0 \tfrac{1}{3} L^3 \dot{\alpha}_w$$

$$M_{\alpha w} = \left[-a_8\dot{\alpha} - a_6\dot{\alpha}_w\right]\cos\gamma_0$$

REV

DAMPING MOMENT ABOUT HELICOPTER C.G.

$$M_\alpha = \int_0^L (\varepsilon_4 + r)\, dP$$

$$M_\alpha = \int_0^L (\varepsilon_4 + r)\left[-\tfrac{1}{2}\rho a_\infty V C_0\right]\left[(\varepsilon_4 + r)\dot{\alpha} + r\dot{\alpha}_w \cos\gamma_0\right] dr$$

$$M_\alpha = \left[-\tfrac{1}{2}\rho a_\infty V C_0 \int_0^L (\varepsilon_4 + r)^2 dr\right]\dot{\alpha} + \left[-\tfrac{1}{2}\rho a_\infty V C_0 \int_0^L r(\varepsilon_4 + r)\, dr \cos\gamma_0\right]\dot{\alpha}_w$$

$$M_\alpha = -\tfrac{1}{2}\rho a_\infty V C_0\left[\tfrac{1}{3}(\varepsilon_4 + L)^3 - \tfrac{1}{3}\varepsilon_4^3\right]\dot{\alpha} - \tfrac{1}{2}\rho a_\infty V C_0 \cos\gamma_0\, L^2\left[\tfrac{1}{2}\varepsilon_4 + \tfrac{1}{3}L\right]\dot{\alpha}_w$$

$$M_\alpha = -a_5\dot{\alpha} - a_8\dot{\alpha}_w$$

SUMMARIZING,

$$M_{\alpha w} = \left[-a_8\dot{\alpha} - a_6\dot{\alpha}_w\right]\cos\gamma_0 = -a_8\cos\gamma_0\,\dot{\alpha} - (a_6\cos\gamma_0 + C_{\alpha w})\dot{\alpha}_w$$

(MECHANICAL DAMPER ADDED)

$$M_\alpha = -a_5\dot{\alpha} - a_8\dot{\alpha}_w$$

WHERE

$$a_5 = \tfrac{1}{2}\rho a_\infty V C_0\, \tfrac{1}{3}\left[(\varepsilon_4 + L)^3 - \varepsilon_4^3\right]$$

$$a_6 = \tfrac{1}{2}\rho a_\infty V C_0\, \tfrac{1}{3}\left[L^3 \cos\gamma_0\right]$$

$$a_8 = \tfrac{1}{2}\rho a_\infty V C_0\, L^2\left[\tfrac{1}{2}\varepsilon_4 + \tfrac{1}{3}L\right]\cos\gamma_0$$

OR $\quad M_{\alpha w} = -a_8\cos\gamma_0\,\dot{\alpha} - (C_{\alpha w} + \bar{C}_{\alpha w})\dot{\alpha}_w$

WHERE $\quad \bar{C}_{\alpha w} = a_6\cos\gamma_0 = \tfrac{1}{2}\rho a_\infty V C_0\, \tfrac{1}{3} L^3 \cos^2\gamma_0$

REV

AERODYNAMIC WING SPRING AND DAMPER

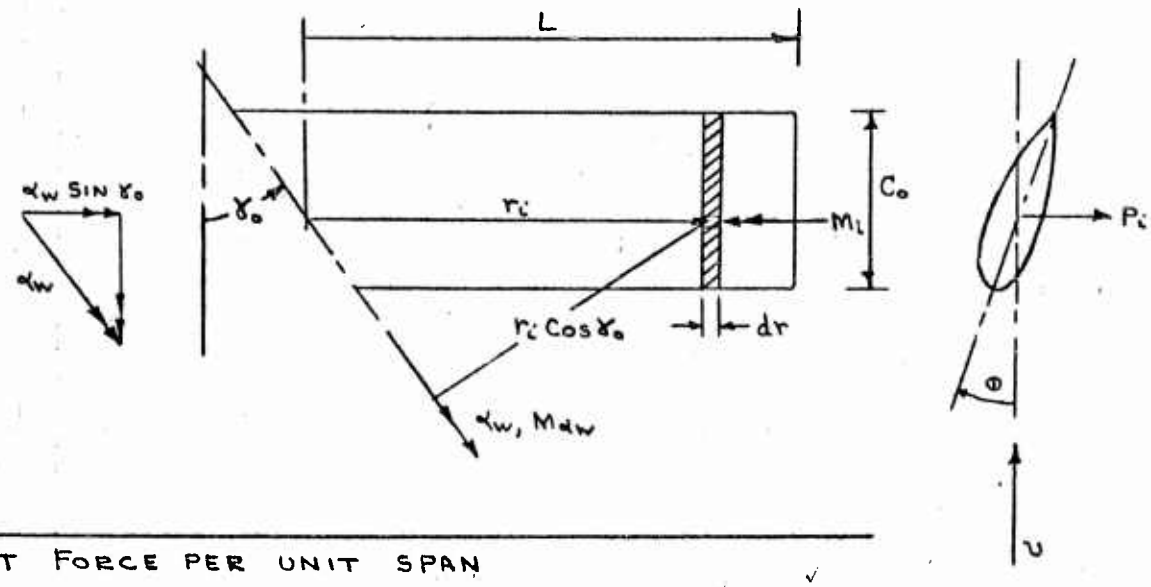

LIFT FORCE PER UNIT SPAN

$$P_i = -\rho b^2\left[U\pi\dot{\alpha} + \pi\ddot{h} - \pi b a\ddot{\alpha}\right] - 2\pi\rho U b C\left[U\alpha + \dot{h} + b\left(\tfrac{1}{2}+a\right)\dot{\alpha}\right]$$

MOMENT PER UNIT SPAN

$$M_i = -\rho b^2\left[\pi\left(\tfrac{1}{2}-a\right)U b\dot{\alpha} + \pi b^2\left(\tfrac{1}{8}+a^2\right)\ddot{\alpha} - a\pi b\ddot{h}\right]$$
$$+ 2\rho U b^2\pi\left(a+\tfrac{1}{2}\right)C\left[U\alpha + \dot{h} + b\left(\tfrac{1}{2}-a\right)\dot{\alpha}\right]$$

WHERE,

ρ = AIR MASS DENSITY
b = AIRFOIL SEMICHORD LENGTH
U = WIND VELOCITY
α = PITCH DISPLACEMENT + NOSE-UP
a = DIST. FROM MIDCHORD TO PITCH AXIS
h = VERTICAL DISPLACEMENT + DOWN
$C = F + iG$, AERODYNAMIC FUNCTIONS

REF. (12)

CONSIDERING THE PITCH AXIS AT THE SEMI-CHORD AND USING ONLY QUASI-STATIC AERODYNAMICS.

$\therefore$ $a = 0$
$C = F + iG = 1$

AND $2b = C_o$

$\alpha_{\text{FROM REF.}} = \theta_{\text{ANALYSIS}}$

SLOPE OF THE LIFT CURVE
$2\pi = a_\infty$
(THEORETICAL)

REV

SUBSTITUTING,

$$P_i = -\frac{1}{8}\rho a_\infty C_o^2\left[v\dot{\theta} + \ddot{h}\right] - \frac{1}{2}\rho a_\infty C_o v\left[v\theta + \dot{h} + \frac{C_o}{4}\dot{\theta}\right]$$

$$M_i = -\frac{1}{8}\rho a_\infty C_o^2\left[\cancel{\frac{1}{2}v C_o\dot{\theta}} + \frac{1}{32}C_o^2\ddot{\theta}\right] + \frac{1}{8}\rho a_\infty C_o^2 v\left[v\theta + \dot{h} + \cancel{\frac{C_o}{4}\dot{\theta}}\right]$$

VERTICAL MOTION OF BLADE SECTION –

+ DOWN

$$h = -(\epsilon_4 + r_i)\alpha - r_i(\cos\gamma_o)\alpha_w - z_i H_r$$

$$\dot{h} = -(\epsilon_4 + r_i)\dot{\alpha} - r_i(\cos\gamma_o)\dot{\alpha}_w - z_i\dot{H}_r$$

$$\ddot{h} = -(\epsilon_4 + r_i)\ddot{\alpha} - r_i(\cos\gamma_o)\ddot{\alpha}_w - z_i\ddot{H}_r$$

BLADE ELEMENT ANGLE OF ATTACK AS A FUNCTION OF α_w

$$\theta = -(\sin\gamma_o)\alpha_w$$

SUBSTITUTING,

$$P_i = -\frac{1}{8}\rho a_\infty C_o^2\left[-v(\sin\gamma_o)\dot{\alpha}_w - (\epsilon_4 + r_i)\ddot{\alpha} - r_i(\cos\gamma_o)\ddot{\alpha}_w - z_i\ddot{H}_r\right]$$
$$-\frac{1}{2}\rho a_\infty C_o v\left[-v(\sin\gamma_o)\alpha_w - (\epsilon_4 + r_i)\dot{\alpha} - r_i(\cos\gamma_o)\dot{\alpha}_w - z_i\dot{H}_r - \frac{C_o}{4}(\sin\gamma_o)\dot{\alpha}_w\right]$$

$$M_i = -\frac{1}{8}\rho a_\infty C_o^2\left[-\frac{1}{32}C_o^2(\sin\gamma_o)\ddot{\alpha}_w\right] + \frac{1}{8}\rho a_\infty C_o^2 v\left[\begin{array}{l}-v(\sin\gamma_o)\alpha_w - (\epsilon_4 + r_i)\dot{\alpha} \\ -r_i(\cos\gamma_o)\dot{\alpha}_w - z_i\dot{H}_r\end{array}\right]$$

<u>MOMENT AT HINGE</u> (+ SIGN FOR LEFT SIDE OF EQUATION)

$$M_W = \int_0^L M_i(\sin\gamma_o)\,dr + \int_0^L P_i\, r_i(\cos\gamma_o)\,dr$$

$$M_W = -\frac{1}{8}\rho a_\infty(\sin\gamma_o)C_o^2\int_0^L\left\{\left[-\frac{1}{32}C_o^2(\sin\gamma_o)\ddot{\alpha}_w\right] + v\left[\begin{array}{l}v(\sin\gamma_o)\alpha_w + (\epsilon_4 + r_i)\dot{\alpha} \\ + r_i(\cos\gamma_o)\dot{\alpha}_w + z_i\dot{H}_r\end{array}\right]\right\}dr$$

$$-\frac{1}{8}\rho a_\infty C_o^2(\cos\gamma_o)\int_0^L\left\{-v r_i(\sin\gamma_o)\dot{\alpha}_w - (\epsilon_4 + r_i)r_i\ddot{\alpha} - r_i^2(\cos\gamma_o)\ddot{\alpha}_w - r_i z_i\ddot{H}_r\right\}dr$$

REV

$$-\frac{1}{2}\rho a_\infty C_o(\cos\gamma_o)v\int_0^L\left\{-v r_i(\sin\gamma_o)\alpha_w - r_i(\epsilon_4 + r_i)\dot{\alpha} - r_i^2(\cos\gamma_o)\dot{\alpha}_w - r_i z_i\dot{H}_r - \frac{C_o r_i}{4}(\sin\gamma_o)\dot{\alpha}_w\right\}dr$$

MOMENT AT HINGE (CONT.)

$$M_W = -\frac{1}{8}\rho a_\infty (\sin\gamma_0) C_0^2 \left[-\frac{L}{32} C_0^2 (\sin\gamma_0)\ddot{\alpha}_W + v^2 L (\sin\gamma_0)\alpha_W + vL\epsilon_4\dot{\alpha} + v\frac{L^2}{2}\dot{\alpha} + v\frac{L^2}{2}(\cos\gamma_0)\dot{\alpha}_W + vLz_i\dot{H}_r \right]$$

$$-\frac{1}{8}\rho a_\infty C_0^2 (\cos\gamma_0) \left[-\frac{vL^2}{2}(\sin\gamma_0)\dot{\alpha}_W - \frac{\epsilon_4 L^2}{2}\ddot{\alpha} - \frac{L^3}{3}\ddot{\alpha} - \frac{L^3}{3}(\cos\gamma_0)\ddot{\alpha}_W - \frac{L^2}{2} z_i \ddot{H}_r \right]$$

$$-\frac{1}{2}\rho a_\infty C_0 (\cos\gamma_0) v \left[-\frac{vL^2}{2}(\sin\gamma_0)\alpha_W - \frac{\epsilon_4 L^2}{2}\dot{\alpha} - \frac{L^3}{3}\dot{\alpha} - \frac{L^3}{3}(\cos\gamma_0)\dot{\alpha}_W - \frac{L^2}{2} z_i \dot{H}_r - \frac{C_0 L^2}{8}(\sin\gamma_0)\dot{\alpha}_W \right]$$

AERODYNAMIC WING DAMPER, $C_{\alpha W}$

$$C_{\alpha W} = \frac{\partial M_W}{\partial \dot{\alpha}_W}$$

$$C_{\alpha W} = -\frac{1}{8}\rho a_\infty (\sin\gamma_0) C_0^2 \left[\frac{vL^2}{2}\cos\gamma_0 \right] - \frac{1}{8}\rho a_\infty C_0^2 (\cos\gamma_0) \left[-\frac{vL^2}{2}\sin\gamma_0 \right]$$

$$-\frac{1}{2}\rho a_\infty C_0 (\cos\gamma_0) v \left[-\frac{C_0 L^2}{8}(\sin \qquad \frac{L^3}{3}(\cos\gamma_0) \right]$$

$$C_{\alpha W} = \frac{1}{16}\rho a_\infty C_0^2 L^2 v \left[\cos\gamma_0 \sin\gamma_0 + \frac{L}{3 C_0}\cos^2\gamma_0 \right]$$

AERODYNAMIC WING SPRING, $K_{\alpha W}$

$$K_{\alpha W} = \frac{\partial M_W}{\partial \alpha_W}$$

$$K_{\alpha W} = -\frac{1}{8}\rho a_\infty (\sin\gamma_0) C_0^2 \left[v^2 L (\sin\gamma_0) \right] - \frac{1}{2}\rho a_\infty C_0 (\cos\gamma_0) v \left[-\frac{vL^2}{2}\sin\gamma_0 \right]$$

REV

$$K_{\alpha W} = \frac{1}{8}\rho a_\infty C_0^2 \left[-(\sin^2\gamma_0) v^2 L + \frac{2 v^2 L^2}{C_0}\cos\gamma_0 \sin\gamma_0 \right]$$

$$K_{\alpha W} = \frac{1}{8}\rho a_\infty C_0^2 v^2 L^2 \left[-\frac{1}{L}\sin^2\gamma_0 + \frac{2}{C_0}\cos\gamma_0 \sin\gamma_0 \right]$$

7. COMPLETE EQUATIONS OF MOTION

FROM THE PRECEDING SECTIONS THE COMPLETE EQUATIONS OF MOTION CAN BE ASSEMBLED.

a. LATERAL

LATERAL HELICOPTER MOTION y

$$M\ddot{y} = 0$$

LATERAL AERODYNAMIC ROTOR FORCE

$$F_y = (T_F + T_A)\left\{\alpha - \frac{1}{3}\sum_{k=1}^{3}\left[\beta_k \sin\psi_k + \frac{\dot{\beta}_k}{\Omega}\cos\psi_k\right]\right\}$$

LATERAL HUB FORCE FROM BLADE LAG AT EACH HUB

$$H_y = -\sigma_3 \frac{d^2}{dt^2}\sum_{k=1}^{3} \xi_k \cos\psi_k$$

COMBINING THESE,

$$M\ddot{y} = -2\sigma_3 \frac{d^2}{dt^2}\sum_{k=1}^{3}\xi_k \cos\psi_k + (T_F + T_A)\left\{\alpha - \frac{1}{3}\sum_{k=1}^{3}\left[\beta_k \sin\psi_k + \frac{\dot{\beta}_k}{\Omega}\cos\psi_k\right]\right.$$

b. ROLL

HELICOPTER ROLL MOTION α

$$I_\alpha \ddot{\alpha} + 2\sum(\varepsilon_4 + r_i) r_i m_i \cos\gamma_0 \ddot{\alpha} = 0$$

AERODYNAMIC ROLL MOMENT

$$M_y = -\frac{1}{3}(T_F h_F + T_A h_A)\sum_{k=1}^{3}\left[\beta_k \sin\psi_k + \frac{\dot{\beta}_k}{\Omega}\cos\psi_k\right]$$

LATERAL HUB FORCE FROM BLADE LAG AT EACH HUB

$$H_y = -\sigma_3 \frac{d^2}{dt^2}\sum_{k=1}^{3}\xi_k \cos\psi_k$$

CONVERT TO MOMENT

$$M_{\alpha y} = -(h_F + h_A)\sigma_3 \frac{d^2}{dt^2}\sum_{k=1}^{3}\xi_k \cos\psi_k$$

DAMPING MOMENT ABOUT HELICOPTER C.G.

$$M_\alpha = -a_5\dot{\alpha} - a_8\dot{\alpha}_w$$

COMBINING THESE

$$I_\alpha \ddot{\alpha} + 2\sum(\varepsilon_4 + r_i) r_i m_i \cos\gamma_0 \ddot{\alpha}_w + a_5\dot{\alpha} + a_8\dot{\alpha}_w = -(h_F + h_A)\sigma_3 \frac{d^2}{dt^2}\sum_{k=1}^{3}\xi_k \cos\psi_k$$
$$-\frac{1}{3}(T_F h_F + T_A h_A)\sum_{k=1}^{3}\left[\beta_k \sin\psi_k + \frac{\dot{\beta}_k}{\Omega}\cos\psi_k\right]$$

c. WING FLAP

WING EQUATION OF MOTION ABOUT HINGE

$$\sum_{i=1}^{n}(\varepsilon_4 + r_i) r_i m_i \cos\gamma_0 \ddot{\alpha} + \sum_{i=1}^{n} r_i^2 \cos^2\gamma_0 m_i \ddot{\alpha}_w + K_{\alpha w}\alpha_w + \bar{C}_{\alpha w}\dot{\alpha}_w + C_{\alpha w}\dot{\alpha}_w + a_8 \cos\gamma_0 \dot{\alpha} = 0$$

d. BLADE FLAP

$$I_\beta \ddot{\beta}_k + (e_\beta \sigma_\beta + I_\beta)\Omega^2 \beta_k = C_1 \dot{y}\cos\psi_k + C_2 \dot{y}\sin\psi_k + C_3\dot{\alpha}\cos\psi_k + C_4\dot{\alpha}\sin\psi_k + C_5\dot{\beta}_k + C_6\dot{\xi}_k$$

REV

e. BLADE LAG

$$I_\xi \ddot{\xi}_k + C_{\xi k}\dot{\xi}_k + e_\xi \sigma_\xi \Omega^2 \xi_k - 2\Omega\beta_0\dot{\beta}_k[I_\xi + \Delta e \sigma_\xi] = -\sigma_\xi \ddot{y}\cos\psi_k$$

y WAS USED HERE AS LATERAL MOTION AT THE HUB, SO IT MUST BE MODIFIED TO INCLUDE THE LATERAL MOTION AT THE HUB RESULTING FROM ROLL ABOUT THE CG. AS AN APPROXIMATION, h_F THE VERTICAL DISTANCE FROM C.G. UP TO THE FORWARD ROTOR HUB IS USED FOR BOTH ROTORS

$$I_\xi \ddot{\xi}_k + C_{\xi k}\dot{\xi}_k + e_\xi \sigma_\xi \Omega^2 \xi_k - 2\Omega\beta_0\dot{\beta}_k[I_\xi + \Delta e \sigma_\xi] = -\sigma_\xi(\ddot{y} + h_F\ddot{\alpha})\cos\psi_k$$

E. SUMMARY

$$y: \quad M\ddot{y} = -2\sigma_\zeta \frac{d^2}{dt^2}\sum_{k=1}^{3}\zeta_k \cos\psi_k + (T_F + T_A)\left\{\alpha - \frac{1}{3}\sum_{k=1}^{3}\left[\beta_k \sin\psi_k + \frac{\dot{\beta}_k}{\Omega}\cos\psi_k\right]\right\}$$

$$\alpha: \quad I_\alpha\ddot{\alpha} + 2\sum_{i=1}^{n}(\varepsilon_4 + r_i) r_i m_i \cos\gamma_0 \ddot{\alpha}_w + a_5\dot{\alpha} + a_8\dot{\alpha}_w = -(h_F + h_A)\sigma_\zeta \frac{d^2}{dt^2}\sum_{k=1}^{3}\zeta_k \cos\psi_k$$
$$- \frac{1}{3}(T_F h_F + T_A h_A)\sum_{k=1}^{3}\left[\beta_k \sin\psi_k + \frac{\dot{\beta}_k}{\Omega}\cos\psi_k\right]$$

$$\alpha_w: \quad \sum_{i=1}^{n} r_i^2 \cos^2\gamma_0\, m_i \ddot{\alpha}_w + \sum_{i=1}^{n}(\varepsilon_4 + r_i) r_i m_i \cos\gamma_0 \ddot{\alpha} + K_{\alpha w}\alpha_w + \bar{C}_{\alpha w}\dot{\alpha}_w + C_{\alpha w}\dot{\alpha}_w = 0$$

$$\beta_k: \quad I_\beta\ddot{\beta}_k + (e_\beta\sigma_\beta + I_\beta)\Omega^2\beta_k = C_1\ddot{y}\cos\psi_k + C_2\ddot{y}\sin\psi_k + C_3\dot{\alpha}\cos\psi_k + C_4\dot{\alpha}\sin\psi_k + C_5\dot{\beta}_k + C_6\dot{\zeta}_k$$

$$\zeta_k: \quad I_\zeta\ddot{\zeta}_k + C_{\zeta k}\dot{\zeta}_k + e_\zeta\sigma_\zeta\Omega^2\zeta_k - 2\Omega\beta_0\dot{\beta}_k\left[I_\zeta + \Delta e\,\sigma_\zeta\right] = -\sigma_\zeta(\ddot{y} + h_F\ddot{\alpha})\cos\psi_k$$

WHERE

M = TOTAL MASS OF HELICOPTER, WINGS, AND BLADES

I_α = TOTAL ROLL INERTIA OF HELICOPTER BLADES AND WINGS ABOUT HELICOPTER C.G.

σ_ζ = BLADE LAG STATIC MOMENT $\qquad I_\zeta$ = BLADE LAG INERTIA

T_F = FORWARD ROTOR THRUST $\qquad T_A$ = AFT ROTOR THRUST

ε_4 = LATERAL DISTANCE, HELICOPTER CENTERPLANE TO WING HINGE AT QUARTER-CHORD

r_i = LATERAL DISTANCE WING HINGE AT QUARTER CHORD TO WING STATION i

m_i = MASS OF WING AT STATION i

$a_5 = \frac{1}{2}\rho a_\infty V C_0 \frac{1}{3}\left[(\varepsilon_4 + L)^3 - \varepsilon_4^3\right] \qquad a_8 = \frac{1}{2}\rho a_\infty V C_0 L^2\left[\frac{1}{2}\varepsilon_4 + \frac{1}{3}L\right]\cos\gamma_0$

ρ = AIR DENSITY $\qquad a_\infty$ = SLOPE OF AIRFOIL LIFT CURVE

V = WING FORWARD SPEED $\qquad C_0$ = WING CHORD LENGTH

L = WING SPAN LENGTH, HINGE AT QUARTER CHORD TO TIP

γ_0 = WING HINGE LINE ANGLE FROM LONGITUDINAL

$K_{\alpha w}$ = WING AERODYNAMIC HINGE SPRING $= \frac{1}{8}\rho a_\infty C_0 V^2 L^2$

$\bar{C}_{\alpha w}$ = WING HINGE MECHANICAL DAMPER RATE

$C_{\alpha w}$ = WING HINGE AERODYNAMIC DAMPER RATE $= \frac{1}{2}\rho a_\infty V C_0 \frac{1}{3}L^3\cos^2\gamma_0$

σ_β = BLADE FLAP STATIC MOMENT $\qquad I_\beta$ = BLADE FLAP INERTIA

e_β = BLADE FLAP HINGE OFFSET $\qquad \Omega$ = ROTOR SPEED

$C_{\zeta k}$ = BLADE LAG DAMPER EQUIVALENT VISCOUS DAMPING RATE

$= \left(\frac{4P_0}{\pi r_0 \zeta_0 \omega_\zeta} + C\right) r_0^2 \qquad \omega_\zeta$ = BLADE LAG NATURAL FREQUENCY

r_0 = RADIAL ARM OF DAMPER ; C = VISCOUS PORTION OF DAMPER

ζ_0 = LAG AMPLITUDE ; P = PRELOAD OF DAMPER

P_0 = DAMPER PRELOAD

$C_1 = \left[\frac{1}{2}\rho a_\infty C_0\right] 2\Omega\theta_0 \int r_\beta(\varepsilon_\beta + r_\beta)\,dr_\beta - \left[\frac{1}{2}\rho a_\infty C_0\right] v \int r_\beta\,dr_\beta \qquad C_3 = h_F C_1$

$C_2 = \left[\frac{1}{2}\rho a_\infty C_0\right] 2\Omega\beta_0 \int r_\beta(\varepsilon_\beta + r_\beta)\,dr_\beta \qquad C_4 = h_F C_2$

$C_5 = -\left[\frac{1}{2}\rho a_\infty C_0\right]\Omega \int r_\beta^2(\varepsilon_\beta + r_\beta)\,dr_\beta$

$C_6 = \left[\frac{1}{2}\rho a_\infty C_0\right] 2\Omega\theta_0 \int r_\beta(\varepsilon_\beta + r_\beta)\,dr_\beta(r_\beta - \Delta e) - \left[\frac{1}{2}\rho a_\infty C_0\right] v \int r_\beta(r_\beta - \Delta e)\,dr_\beta$

θ_0 = BLADE COLL. PITCH ANGLE $\qquad \beta_0$ = FLAP CONING ANGLE

$\Delta e = e_\zeta - e_\beta \qquad e_\zeta$ = LAG HINGE OFFSET

v = ROTOR DOWNWASH VELOCITY

REV

8. Quasi-Normal Form of the Complete Equations of Motion

The azimuth coordinates ψ_k can be eliminated from the blade equations and they can be simplified by application of the transformation coordinates γ and δ known as quasi-normal coordinates. Both the lag and flap equations can be modified similarly.

$$\gamma = \sum_{k=1}^{n} \xi_k \sin\psi_k \qquad \delta = \sum_{k=1}^{n} \xi_k \cos\psi_k$$

Differentiating,

$$\dot{\gamma} = \sum_{k=1}^{n}\left[\Omega \xi_k \cos\psi_k + \dot{\xi}_k \sin\psi_k\right] \qquad \dot{\delta} = \sum_{k=1}^{n}\left[-\Omega \xi_k \sin\psi_k + \dot{\xi}_k \cos\psi_k\right]$$

$$\ddot{\gamma} = \sum_{k=1}^{n}\begin{bmatrix} -\Omega^2 \xi_k \sin\psi_k + \Omega \dot{\xi}_k \cos\psi_k \\ +\Omega \dot{\xi}_k \cos\psi_k + \ddot{\xi}_k \sin\psi_k \end{bmatrix} \qquad \ddot{\delta} = \sum_{k=1}^{n}\begin{bmatrix} -\Omega^2 \xi_k \cos\psi_k - \Omega \dot{\xi}_k \sin\psi_k \\ -\Omega \dot{\xi}_k \sin\psi_k + \ddot{\xi}_k \cos\psi_k \end{bmatrix}$$

Substitute γ and δ in $\dot{\gamma}$ and $\dot{\delta}$

$$\dot{\gamma} = \Omega\delta + \sum_{k=1}^{n} \dot{\xi}_k \sin\psi_k \qquad \dot{\delta} = -\Omega\gamma + \sum_{k=1}^{n} \dot{\xi}_k \cos\psi_k$$

or

$$\sum_{k=1}^{n} \dot{\xi}_k \sin\psi_k = \dot{\gamma} - \Omega\delta \qquad \sum_{k=1}^{n} \dot{\xi}_k \cos\psi_k = \dot{\delta} + \Omega\gamma$$

Substitute these in $\ddot{\gamma}$ and $\ddot{\delta}$,

$$\ddot{\gamma} = -\Omega^2\gamma + 2\Omega(\dot{\delta} + \Omega\gamma) + \sum_{k=1}^{n} \ddot{\xi}_k \sin\psi_k \qquad \ddot{\delta} = -\Omega^2\delta - 2\Omega(\dot{\gamma} - \Omega\delta) + \sum_{k=1}^{n} \ddot{\xi}_k \cos\psi_k$$

or

$$\sum_{k=1}^{n} \ddot{\xi}_k \sin\psi_k = \ddot{\gamma} - \Omega^2\gamma - 2\Omega\dot{\delta} \qquad \sum_{k=1}^{n} \ddot{\xi}_k \cos\psi_k = \ddot{\delta} - \Omega^2\delta + 2\Omega\dot{\gamma}$$

Summarizing,

$$\sum_{k=1}^{n} \xi_k \sin\psi_k = \gamma \qquad \sum_{k=1}^{n} \xi_k \cos\psi_k = \delta$$

$$\sum_{k=1}^{n} \dot{\xi}_k \sin\psi_k = \dot{\gamma} - \Omega\delta \qquad \sum_{k=1}^{n} \dot{\xi}_k \cos\psi_k = \dot{\delta} + \Omega\gamma$$

$$\sum_{k=1}^{n} \ddot{\xi}_k \sin\psi_k = \ddot{\gamma} - \Omega^2\gamma - 2\Omega\dot{\delta} \qquad \sum_{k=1}^{n} \ddot{\xi}_k \cos\psi_k = \ddot{\delta} - \Omega^2\delta + 2\Omega\dot{\gamma}$$

REV

IN THE LAG PLANE THE QUASI-NORMAL COORDINATES REPRESENT THE C.G. WHIRL OF THE LAGGING BLADE PATTERN. EXPERIENCE HAS SHOWN THAT WHEN INSTABILITIES EXIST THE BLADE LAG OSCILLATIONS ARE IN AN ANTI-SYMMETRIC PATTERN WHICH CAUSES THE CENTER OF GRAVITY TO MOVE OFF THE SHAFT CENTER AND WHIRL ABOUT THE SHAFT IN THE DIRECTION OPPOSITE TO THE SHAFT ROTATION. THE γ_5 AND δ_5 COORDINATES REPRESENT THE LONGITUDINAL AND LATERAL DISPLACEMENTS OF THE C.G VIEWED IN THE FIXED SYSTEM. SIMILARLY IN THE FLAPPING DIRECTION THE QUASI-NORMAL COORDINATES γ AND δ REPRESENT THE LONGITUDINAL AND LATERAL FORCE COMPONENTS IN THE FIXED SYSTEM.

a. LATERAL

$$\frac{d^2}{dt^2}\sum_{k=1}^{n}\xi_k\cos\psi_k = \frac{d}{dt}\left[-\Omega\xi_k\sin\psi_k + \dot{\xi}_k\cos\psi_k\right] =$$

$$= -\Omega\left[\Omega\xi_k\cos\psi_k + \dot{\xi}_k\sin\psi_k\right] - \Omega\dot{\xi}_k\sin\psi_k + \ddot{\xi}_k\cos\psi_k$$

$$= -\Omega^2\xi_k\cos\psi_k - 2\Omega\dot{\xi}_k\sin\psi_k + \ddot{\xi}_k\cos\psi_k$$

IN QUASI-NORMAL COORDINATES

$$\frac{d^2}{dt^2}\sum_{k=1}^{n}\xi_k\cos\psi_k = -\Omega^2\delta_5 - 2\Omega(\dot{\gamma}_5 - \Omega\delta_5) + \ddot{\delta}_5 - \Omega^2\delta_5 + 2\Omega\dot{\gamma}_5 = \ddot{\delta}_5$$

TRANSFORM THE FLAP TERMS IN THE AIRLOAD TO QUASI-NORMAL COORDINATES,

$$\sum_{k=1}^{3}\beta_k\sin\psi_k = \gamma_\beta \qquad \sum_{k=1}^{3}\dot{\beta}_k\cos\psi_k = \dot{\delta}_\beta + \Omega\gamma_\beta$$

$$M\ddot{y} = -2\sigma_5\ddot{\delta}_5 + (T_F + T_A)\left\{\alpha - \frac{1}{3}\gamma_\beta - \frac{1}{3\Omega}(\dot{\delta}_\beta + \Omega\gamma_\beta)\right\}$$

$$M\ddot{y} = -2\sigma_5\ddot{\delta}_5 + (T_F + T_A)\left\{\alpha - \frac{2}{3}\gamma_\beta - \frac{1}{3\Omega}\dot{\delta}_\beta\right\}$$

$$\ddot{y} = -\frac{2\sigma_5}{M}\ddot{\delta}_5 + \frac{T_F + T_A}{M}\alpha - \frac{2}{3}\frac{T_F + T_A}{M}\gamma_\beta - \frac{1}{3\Omega}\frac{T_F + T_A}{M}\dot{\delta}_\beta$$

ORDINARILY, IN HELICOPTER STABILITY EQUATIONS, THE TERM $\frac{T_F + T_A}{M} = \frac{W}{W/g} = g$ WHEN THE TOTAL THRUST SUPPORTS THE GROSS WEIGHT. IN THE PRESENT INSTANCE M INCLUDES THE WING MASS BUT $T_F + T_A$ SUPPORTS ONLY THE HELICOPTER WEIGHT.

IN SIMPLIFIED FORM,

$$\ddot{y} = B_1\alpha + B_2\ddot{\delta}_5 + B_3\gamma_\beta + B_{43}\dot{\delta}_\beta$$

b ROLL

THE TRANSFORMATIONS SHOWN IN THE y EQUATION ABOVE APPLY HERE.

$$I_\alpha\ddot{\alpha} + 2\Sigma(\varepsilon_4 + r_i)r_i m_i\cos\psi_0\ddot{\alpha}_w + a_5\dot{\alpha} + a_8\dot{\alpha}_w = -(h_F + h_A)\sigma_5\ddot{\delta}_5 - \frac{1}{3}(T_F h_F + T_A h_A)\left[\gamma_\beta + \frac{1}{\Omega}(\dot{\delta}_\beta + \Omega\gamma_\beta)\right]$$

$$I_\alpha\ddot{\alpha} = -a_5\dot{\alpha} - 2\Sigma(\varepsilon_4 + r_i)r_i m_i\cos\psi_0\ddot{\alpha}_w - a_8\dot{\alpha}_w - (h_F + h_A)\sigma_5\ddot{\delta}_5 - \frac{2}{3}(T_F h_F + T_A h_A)\gamma_\beta - \frac{1}{3\Omega}(T_F h_F + T_A h_A)\dot{\delta}_\beta$$

$$\ddot{\alpha} = \frac{2\Sigma(\varepsilon_4 + r_i)r_i m_i\cos\psi_0}{I_\alpha}\ddot{\alpha}_w - \frac{a_5}{I_\alpha}\dot{\alpha} - \frac{a_8}{I_\alpha}\dot{\alpha}_w - \frac{h_F + h_A}{I_\alpha}\sigma_5\ddot{\delta}_5 - \frac{2}{3}\frac{T_F h_F + T_A h_A}{I_\alpha}\gamma_\beta - \frac{1}{3\Omega}\frac{T_F h_F + T_A h_A}{I_\alpha}\dot{\delta}_\beta$$

$$\ddot{\alpha} = B_4\dot{\alpha} + B_5\ddot{\alpha}_w + B_6\dot{\alpha}_w + B_7\ddot{\delta}_5 + B_8\gamma_\beta + B_{44}\dot{\delta}_\beta$$

REV

c. WING FLAP

$$\Sigma r_i^2 \cos^2\gamma_0 m_i \ddot{\alpha}_w = -\Sigma(\varepsilon_4 + r_i) r_i m_i \ddot{\alpha} - K_{\alpha w}\alpha_w - \bar{C}_{\alpha w}\dot{\alpha}_w - C_{\alpha w}\dot{\alpha}_w - a_8 \cos\gamma_0 \dot{\alpha}$$

$$\ddot{\alpha}_w = -\frac{\Sigma(\varepsilon_4 + r_i) r_i m_i \cos\gamma_0}{\Sigma r_i^2 \cos^2\gamma_0 m_i}\ddot{\alpha} - \frac{\bar{C}_{\alpha w} + C_{\alpha w}}{\Sigma r_i^2 \cos^2\gamma_0 m_i}\dot{\alpha}_w - \frac{K_{\alpha w}}{\Sigma r_i^2 \cos^2\gamma_0 m_i}\alpha_w - \frac{a_8 \cos\gamma_0}{\Sigma r_i^2 \cos^2\gamma_0 m_i}\dot{\alpha}$$

$$\ddot{\alpha}_w = B_9 \dot{\alpha}_w + B_{10}\alpha_w + B_{11}\ddot{\alpha} + B_{12}\dot{\alpha}$$

d. BLADE FLAP

MULTIPLY THE β_K EQUATION THROUGH WITH $\sin\psi_K$ AND THEN $\cos\psi_K$ AND SUM OVER THE THREE BLADES OF THE ROTOR

$$I_\beta \sum_{K=1}^{3} \ddot{\beta}_K \sin\psi_K + (e_\beta\sigma_\beta + I_\beta)\Omega^2 \sum_{K=1}^{3} \beta_K \sin\psi_K = C_1 \dot{y} \sum_{K=1}^{3} \sin\psi_K \cos\psi_K + C_2 \dot{y} \sum_{K=1}^{3} \sin^2\psi_K + C_3 \dot{\alpha} \sum_{K=1}^{3} \sin\psi_K \cos\psi_K$$
$$+ C_4 \dot{\alpha} \sum_{K=1}^{3} \sin^2\psi_K + C_5 \sum_{K=1}^{3} \dot{\beta}_K \sin\psi_K + C_6 \sum_{K=1}^{3} \dot{\delta}_K \sin\psi_K$$

$$I_\beta \sum_{K=1}^{3} \ddot{\beta}_K \cos\psi_K + (e_\beta\sigma_\beta + I_\beta)\Omega^2 \sum_{K=1}^{3} \beta_K \cos\psi_K = C_1 \dot{y} \sum_{K=1}^{3} \cos^2\psi_K + C_2 \dot{y} \sum_{K=1}^{3} \sin\psi_K \cos\psi_K + C_3 \dot{\alpha} \sum_{K=1}^{3} \cos^2\psi_K$$
$$+ C_4 \dot{\alpha} \sum_{K=1}^{3} \sin\psi_K \cos\psi_K + C_5 \sum_{K=1}^{3} \dot{\beta}_K \cos\psi_K + C_6 \sum_{K=1}^{3} \dot{\delta}_K \cos\psi_K$$

$$\sum_{K=1}^{3} \sin^2\psi_K = \sin^2 0^\circ + \sin^2 120^\circ + \sin^2 240^\circ = 0 + \left(\frac{\sqrt{3}}{2}\right)^2 + \left(-\frac{\sqrt{3}}{2}\right)^2 = \frac{3}{2}$$

$$\sum_{K=1}^{3} \cos^2\psi_K = \cos^2 0^\circ + \cos^2 120^\circ + \cos^2 240^\circ = 1 + \left(-\frac{1}{2}\right)^2 + \left(-\frac{1}{2}\right)^2 = \frac{3}{2}$$

$$\sum_{K=1}^{3} \sin\psi_K \cos\psi_K = \sin 0^\circ \cos 0^\circ + \sin 120^\circ \cos 120^\circ + \sin 240^\circ \cos 240^\circ = (0)(1) + \left(\frac{\sqrt{3}}{2}\right)\left(-\frac{1}{2}\right) + \left(-\frac{\sqrt{3}}{2}\right)\left(-\frac{1}{2}\right) = 0$$

THE QUASI-NORMAL COORDINATES ONE,

$$I_\beta(\ddot{\gamma}_\beta - \Omega^2\gamma_\beta - 2\Omega\dot{\delta}_\beta) + (e_\beta\sigma_\beta + I_\beta)\Omega^2\gamma_\beta = \tfrac{3}{2}C_2\dot{y} + \tfrac{3}{2}C_4\dot{\alpha} + C_5(\dot{\gamma}_\beta - \Omega\delta_\beta) + C_6(\dot{\gamma}_5 - \Omega\delta_5)$$

$$I_\beta(\ddot{\delta}_\beta - \Omega^2\delta_\beta + 2\Omega\dot{\gamma}_\beta) + (e_\beta\sigma_\beta + I_\beta)\Omega^2\delta_\beta = \tfrac{3}{2}C_1\dot{y} + \tfrac{3}{2}C_3\dot{\alpha} + C_5(\dot{\delta}_\beta + \Omega\gamma_\beta) + C_6(\dot{\delta}_5 + \Omega\gamma_5)$$

AND

$$\ddot{\gamma}_\beta = \frac{C_5}{I_\beta}\dot{\gamma}_\beta - \frac{e_\beta\sigma_\beta}{I_\beta}\Omega^2\gamma_\beta + 2\Omega\dot{\delta}_\beta - \frac{\Omega C_5}{I_\beta}\delta_\beta + \frac{C_6}{I_\beta}\dot{\gamma}_5 - \frac{\Omega C_6}{I_\beta}\delta_5 + \frac{3}{2}\frac{C_2}{I_\beta}\dot{y} + \frac{3}{2}\frac{C_4}{I_\beta}\dot{\alpha}$$

$$\ddot{\delta}_\beta = \frac{C_5}{I_\beta}\dot{\delta}_\beta - \frac{e_\beta\sigma_\beta}{I_\beta}\Omega^2\delta_\beta - 2\Omega\dot{\gamma}_\beta + \frac{\Omega C_5}{I_\beta}\gamma_\beta + \frac{\Omega C_6}{I_\beta}\gamma_5 + \frac{C_6}{I_\beta}\dot{\delta}_5 + \frac{3}{2}\frac{C_1}{I_\beta}\dot{y} + \frac{3}{2}\frac{C_3}{I_\beta}\dot{\alpha}$$

OR

$$\ddot{\gamma}_\beta = B_{27}\dot{\gamma}_\beta + B_{28}\gamma_\beta + B_{29}\dot{\delta}_\beta + B_{30}\delta_\beta + B_{31}\dot{\gamma}_5 + B_{32}\delta_5 + B_{33}\dot{y} + B_{34}\dot{\alpha}$$

$$\ddot{\delta}_\beta = B_{35}\dot{\delta}_\beta + B_{36}\delta_\beta + B_{37}\dot{\gamma}_\beta + B_{38}\gamma_\beta + B_{39}\gamma_5 + B_{40}\dot{\delta}_5 + B_{41}\dot{y} + B_{42}\dot{\alpha}$$

REV

e. BLADE LAG

AS ABOVE MULTIPLY THE ξ_K EQUATION THROUGH WITH $\sin\psi_K$ AND $\cos\psi_K$ AND SUM,

$$I_3\sum_1^3\ddot{\xi}_K\sin\psi_K+C_{3K}\sum_1^3\dot{\xi}_K\sin\psi_K+e_3\sigma_3\Omega^2\sum_1^3\xi_K\sin\psi_K-2\Omega\beta_0\left[I_3+\Delta e\sigma_3\right]\sum_1^3\dot{\beta}_K\sin\psi_K=-\sigma_3(\ddot{y}+h_F\ddot{\alpha})\sum_1^3\sin\psi_K\cos\psi_K$$

$$I_3\sum_1^3\ddot{\xi}_K\cos\psi_K+C_{3K}\sum\dot{\xi}_K\cos\psi_K+e_3\sigma_3\Omega^2\sum\xi_K\cos\psi_K-2\Omega\beta_0\left[I_3+\Delta e\sigma_3\right]\sum_1^3\dot{\beta}_K\cos\psi_K=-\sigma_3(\ddot{y}+h_F\ddot{\alpha})\sum_1^3\cos^2\psi_K$$

$$I_3(\ddot{\gamma}_3-\Omega^2\gamma_3-2\Omega\dot{\delta}_3)+C_{3K}(\dot{\gamma}_3-\Omega\delta_3)+e_3\sigma_3\Omega^2\gamma_3-2\Omega\beta_0\left[I_3+\Delta e\sigma_3\right](\dot{\delta}_\beta-\Omega\delta_\beta)=0$$

$$I_3(\ddot{\delta}_3-\Omega^2\delta_3+2\Omega\dot{\gamma}_3)+C_{3K}(\dot{\delta}_3+\Omega\gamma_3)+e_3\sigma_3\Omega^2\delta_3-2\Omega\beta_0\left[I_3+\Delta e\sigma_3\right](\dot{\gamma}_\beta+\Omega\gamma_\beta)=-\frac{3}{2}\sigma_3(\ddot{y}+h_F\ddot{\alpha})$$

$$\ddot{\gamma}_3=-\frac{C_3}{I_3}\dot{\gamma}_3+\left(1-\frac{e_3\sigma_3}{I_3}\right)\Omega^2\gamma_3+2\Omega\dot{\delta}_3+\frac{2C_{3K}}{I_3}\delta_3+\frac{2\Omega\beta_0}{I_3}\left[I_3+\Delta e\sigma_3\right]\dot{\gamma}_\beta-\frac{2\Omega^2\beta_0}{I_3}\left[I_3+\Delta e\sigma_3\right]\delta_\beta$$

$$\ddot{\delta}_3=-\frac{C_3}{I_3}\dot{\delta}_3+\left(1-\frac{e_3\sigma_3}{I_3}\right)\Omega^2\delta_3-2\Omega\dot{\gamma}_3-\frac{\Omega C_{3K}}{I_3}\gamma_3+\frac{2\Omega^2\beta_0}{I_3}\left[I_3+\Delta e\sigma_3\right]\gamma_\beta+\frac{2\Omega\beta_0}{I_3}\left[I_3+\Delta e\sigma_3\right]\dot{\delta}_\beta$$
$$-\frac{3}{2}\frac{\sigma_3}{I_3}\ddot{y}-\frac{3}{2}\frac{\sigma_3}{I_3}h_F\ddot{\alpha}$$

OR

$$\ddot{\gamma}_3=B_{13}\dot{\gamma}_3+B_{14}\gamma_3+B_{15}\dot{\delta}_3+B_{16}\delta_3+B_{17}\dot{\gamma}_\beta+B_{18}\delta_\beta$$

$$\ddot{\delta}_3=B_{19}\dot{\delta}_3+B_{20}\delta_3+B_{21}\dot{\gamma}_3+B_{22}\gamma_3+B_{23}\gamma_\beta+B_{24}\dot{\delta}_\beta+B_{25}\ddot{y}+B_{26}\ddot{\alpha}$$

REV

f. SUMMARY

$$\ddot{y} = B_1\alpha + B_2\ddot{\delta}_\xi + B_3\gamma_\beta + B_{43}\dot{\delta}_\beta$$

$$\ddot{\alpha} = B_4\dot{\alpha} + B_5\ddot{\alpha}_w + B_6\dot{\alpha}_w + B_7\ddot{\delta}_\xi + B_8\gamma_\beta + B_{44}\dot{\delta}_\beta$$

$$\ddot{\alpha}_w = B_9\dot{\alpha}_w + B_{10}\alpha_w + B_{11}\ddot{\alpha} + B_{12}\dot{\alpha}$$

$$\ddot{\gamma}_\xi = B_{13}\dot{\gamma}_\xi + B_{14}\gamma_\xi + B_{15}\dot{\delta}_\xi + B_{16}\delta_\xi + B_{17}\dot{\gamma}_\beta + B_{18}\delta_\beta$$

$$\ddot{\delta}_\xi = B_{19}\dot{\delta}_\xi + B_{20}\delta_\xi + B_{21}\dot{\gamma}_\xi + B_{22}\gamma_\xi + B_{23}\gamma_\beta + B_{24}\dot{\delta}_\beta + B_{25}\ddot{y} + B_{26}\ddot{\alpha}$$

$$\ddot{\gamma}_\beta = B_{27}\dot{\gamma}_\beta + B_{28}\gamma_\beta + B_{29}\dot{\delta}_\beta + B_{30}\delta_\beta + B_{31}\dot{\gamma}_\xi + B_{32}\delta_\xi + B_{33}\dot{y} + B_{34}\dot{\alpha}$$

$$\ddot{\delta}_\beta = B_{35}\dot{\delta}_\beta + B_{36}\delta_\beta + B_{37}\dot{\gamma}_\beta + B_{38}\gamma_\beta + B_{39}\gamma_\xi + B_{40}\dot{\delta}_\xi + B_{41}\dot{y} + B_{42}\dot{\alpha}$$

WHERE,

$$B_2 = -\frac{2\sigma_\xi}{M_{11}} \qquad B_1 = \frac{T_F + T_A}{M_{11}} \qquad B_3 = -\frac{2}{3}\frac{T_F + T_A}{M_{11}} \qquad B_{43} = -\frac{1}{3\Omega}\frac{T_F + T_A}{M_{11}}$$

$$B_4 = -\frac{C_{22}}{M_{22}} \qquad B_5 = -\frac{2\sum(\varepsilon_4 + r_i)r_i m_i \omega\gamma_0}{M_{22}} \qquad B_6 = -\frac{C_{23}}{M_{22}} \qquad B_7 = -\frac{h_F + h_A}{M_{22}}\sigma_\xi$$

$$B_8 = -\frac{2}{3}\frac{T_F h_F + T_A h_A}{M_{22}} \qquad B_{44} = -\frac{1}{3\Omega}\frac{T_F h_F + T_A h_A}{M_{22}} \qquad B_9 = -\frac{C_{33}}{M_{33}}$$

$$B_{10} = -\frac{K_{33}}{M_{33}} \qquad B_{11} = -\frac{M_{23}}{M_{33}} \qquad B_{12} = -\frac{C_{23}}{M_{33}}$$

$$B_{13} = -\frac{r_0^2}{I_\xi}\left[\frac{4P}{\pi r_0 \xi \Omega}\sqrt{\frac{I_\xi}{e_\xi \sigma_\xi}} + C\right] \qquad B_{14} = \Omega^2\left(1 - \frac{e_\xi \sigma_\xi}{I_\xi}\right)$$

$$B_{15} = 2\Omega \qquad B_{16} = \frac{r_0^2}{I_\xi}\left[\frac{4P}{\pi r_0 \xi}\sqrt{\frac{I_\xi}{e_\xi \sigma_\xi}} + C\Omega\right] = -B_{13}\Omega$$

$$B_{17} = 2\left(\frac{\Delta e\,\sigma_\xi + I_\xi}{I_\xi}\right)\beta_0\Omega \qquad B_{18} = -B_{17}\Omega \qquad B_{19} = B_{13}$$

$$B_{20} = B_{14} \qquad B_{21} = -B_{15} \qquad B_{22} = B_{13}\Omega \qquad B_{23} = B_{17}\Omega$$

$$B_{24} = B_{17} \qquad B_{25} = -\frac{3}{2}\frac{\sigma_\xi}{I_\xi} \qquad B_{26} = B_{25}h_F \qquad B_{27} = \frac{C_5}{I_\beta}$$

$$B_{28} = -\frac{e_\beta \sigma_\beta \Omega^2}{I_\beta} \qquad B_{29} = B_{15} \qquad B_{30} = -B_{27}\Omega$$

REV

$B_{31} = \frac{C_6}{I_\beta}$ $\quad B_{32} = -B_{31}\Omega$ $\quad B_{33} = \frac{3}{2}\frac{C_2}{I_\beta}$

$B_{34} = \frac{3}{2}\frac{C_4}{I_\beta}$ $\quad B_{35} = B_{27}$ $\quad B_{36} = B_{28}$

$B_{37} = -B_{15}$ $\quad B_{38} = B_{27}\Omega$ $\quad B_{39} = B_{31}\Omega$

$B_{40} = B_{31}$ $\quad B_{41} = \frac{3}{2}\frac{C_1}{I_\beta}$ $\quad B_{42} = \frac{3}{2}\frac{C_3}{I_\beta}$

REV

APPENDIX B

2. Air Instability Analog Program

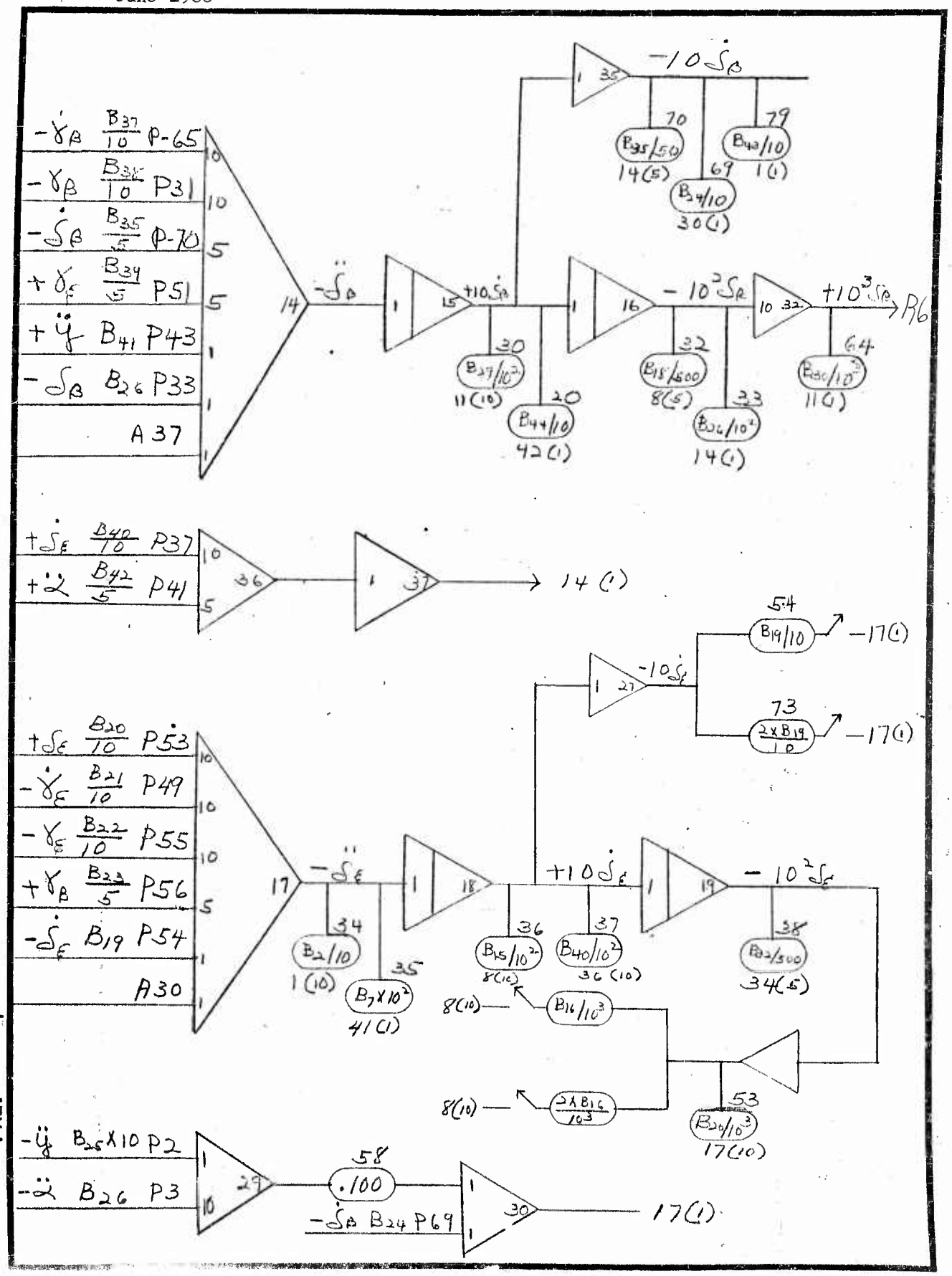
$-\dot{\gamma}_\beta$ $\frac{B_{37}}{10}$ P-65
$-\gamma_\beta$ $\frac{B_{38}}{10}$ P31
$-\dot{\delta}_\beta$ $\frac{B_{35}}{5}$ P-70
$+\gamma_\varepsilon$ $\frac{B_{39}}{5}$ P51
$+\ddot{y}$ B_{41} P43
$-\delta_\beta$ B_{26} P33
A 37
$-\ddot{\delta}_\beta$
$+10\dot{\delta}_\beta$
$-10^2\delta_\beta$
$+10^3\delta_\beta$
R6
$-10\dot{\delta}_\beta$
$B_{35}/50$ 14(5)
$B_{24}/10$ 30(1)
$B_{43}/10$ 1(1)
$B_{27}/10^2$ 11(10)
$B_{44}/10$ 42(1)
$B_{18}/500$ 8(5)
$B_{26}/10^2$ 14(1)
$B_{30}/10^3$ 11(1)
$+\dot{\delta}_\varepsilon$ $\frac{B_{40}}{10}$ P37
$+\ddot{\alpha}$ $\frac{B_{42}}{5}$ P41
14 (1)
$+\delta_\varepsilon$ $\frac{B_{20}}{10}$ P53
$-\dot{\gamma}_\varepsilon$ $\frac{B_{21}}{10}$ P49
$-\gamma_\varepsilon$ $\frac{B_{22}}{10}$ P55
$+\gamma_\beta$ $\frac{B_{23}}{5}$ P56
$-\dot{\delta}_\varepsilon$ B_{19} P54
A30
$-\ddot{\delta}_\varepsilon$
$+10\dot{\delta}_\varepsilon$
$-10^2\delta_\varepsilon$
$-10\dot{\delta}_\varepsilon$
$B_{19}/10$ −17(1)
$\frac{2 \times B_{19}}{10}$ −17(1)
$B_2/10$ 1(10)
$B_7 \times 10^2$ 41(1)
$B_{15}/10^2$ 8(10)
$B_{40}/10^2$ 36(10)
$B_{32}/500$ 34(5)
8(10) $B_{16}/10^3$
8(10) $\frac{2 \times B_{16}}{10^3}$
$B_{20}/10^3$ 17(10)
$-\ddot{y}$ $B_{25} \times 10$ P2
$-\ddot{\alpha}$ B_{26} P3
.100
$-\dot{\delta}_\beta$ B_{24} P69
17(1)

REV

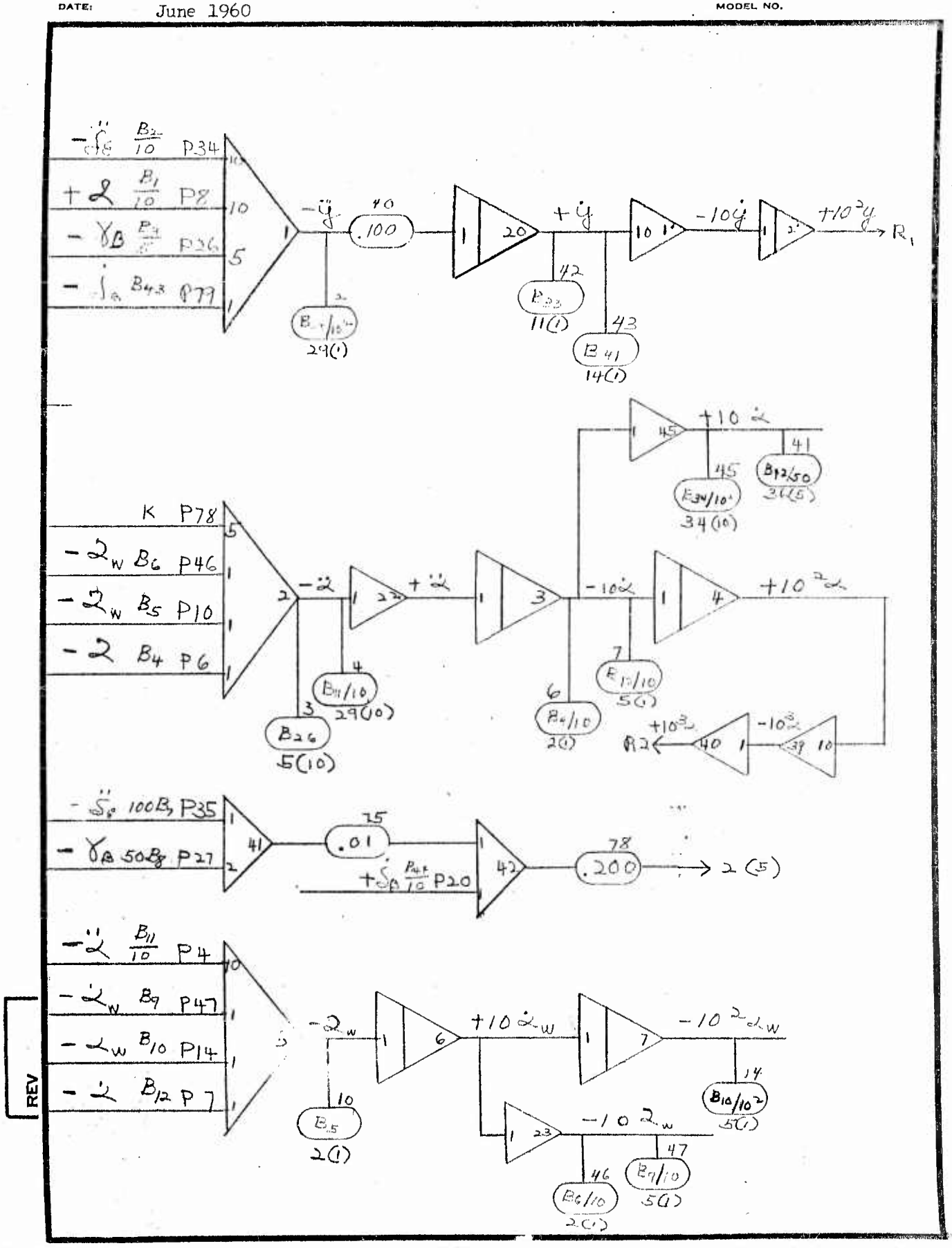
P34
P8
P36
P79
P78
P46
P10
P6
P35
P27
P20
P4
P47
P14
P7
REV
R1
R2

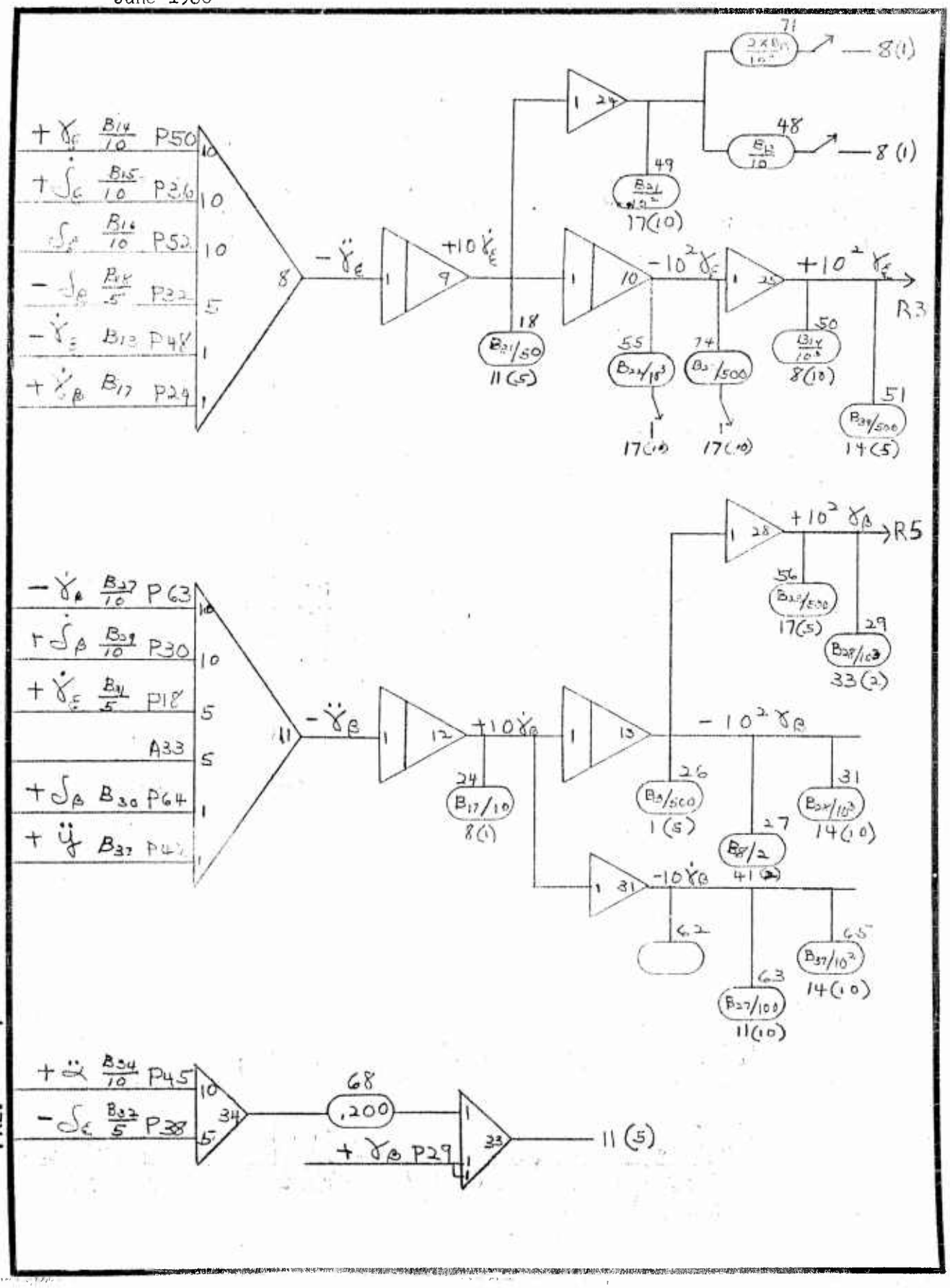
+γε B14/10 P50
+δε B15/10 P36
δβ B16/10 P52
−δβ B18/5 P32
−γ̇ε B13 P48
+γ̇β B17 P24
−γ̈ε
+10γ̇ε
−10²γε
+10²γε
R3
8(1)
8(1)
17(10)
11(5)
8(10)
14(5)
17(10)
17(10)
−γ̇β B27/10 P63
+δβ B29/10 P30
+γ̇ε B31/5 P18
A33
+δβ B30 P64
+ÿ B37 P42
−γ̈β
+10γ̇β
−10²γβ
+10²γβ
R5
17(5)
33(2)
8(1)
1(5)
14(10)
41(2)
14(10)
11(10)
+α̈ B34/10 P45
−δε B32/5 P38
68
.200
+γβ P29
11(5)

REV

APPENDIX B

3. Air Instability Calculations

VERTOL H-21 Calculations

REV

REV

NUMERICAL DATA FOR H-21 HELICOPTER

SYMBOL	DIMENSION	DESCRIPTION	WITHOUT WINGS	0% FUEL	100% FUEL
ρ	LBS·SEC²/IN⁴	AIR MASS DENSITY	$.1147 \times 10^{-6}$	→	→
a_∞	–	SLOPE OF AIRFOIL LIFT CURVE	5.75	→	→
C_0	IN	CHORD OF ROTOR BLADE	18.	→	→
Ω	RAD/SEC	ROTOR SPEED			
θ_0	RAD	COLLECTIVE PITCH ANGLE	.2443	→	→
r_β	IN	SPANWISE COORDINATE ALONG THE BLADE			
e_β	IN	FLAP HINGE OFFSET	4.6	→	→
I_β	LBS-SEC²-IN	BLADE FLAP INERTIA	5812.	→	→
β_0	RAD	CONSTANT FLAP ANGLE	.09226	→	→
r_0	IN	RADIAL ARM OF BLADE DAMPER	5.1	→	→
ζ_0	RAD	SINGLE AMPLITUDE OF BLADE LAG MOTION (5°)	.08727	→	→
e_ζ	IN	LAG HINGE OFFSET	13.9	→	→
σ_ζ	LBS·SEC²	BLADE LAG MOMENT	32.39	→	→
I_ζ	LBS-SEC²-IN	BLADE LAG INERTIA	5144.	→	→
P	LBS	PRELOAD OF ROTOR BLADE LAG DAMPER	600.	→	→
C	LBS / IN/SEC	VISCOUS PORTION OF BLADE LAG DAMPER	170.	→	→
$T_F = T_A$	LBS	THRUST AFT. OR FWD. ROTOR	6750.	→	→
$h_F = h_A$	IN	FWD. OR AFT. ROTOR VERTICAL DISTANCE FROM CG TO HUB	84.	89.	95.
Δe	IN	$e_\zeta - e_\beta$	9.3	→	→
v	IN/SEC	INDUCED VELOCITY = $T_F / 2\rho A_0 V \cos\alpha_R$	108.1	→	→
		($A_0 = \pi R^2 = 201528$ IN²; V = FWD SPEED = 1621 IN/SEC; α_R = SHAFT TILT = −9°)			
M_{11}		MASS OF AIRCRAFT INCLUDING WINGS AND BLADES = M	34.94	45.29	76.35
M_{22}		= I_x = ROLL INERTIA OF AIRCRAFT ABOUT CG (TOTAL)	60000.	699400.	2612000
M_{33}		$= 2\sum_i m_i r_i^2 \cos^2\gamma_0$	0	181800.	727000.
M_{23}		$= 2\sum_i m_i (\varepsilon_4 + r_i) r_i \cos\gamma_0$	0	336600.	1346000.
$C_{22} = 2a_\zeta$		$= 2\sum_i C_{r_i}(r_i+\varepsilon_4)^2 = 2\int_0^L \left(\frac{1}{2}\rho a_\infty C_0 V\right)(r_i+\varepsilon_4)^2 dr_i = \frac{2C_{r_i}}{3}\left[(L+\varepsilon_4)^3 - \varepsilon_4^3\right]$	0	2876000.	2876000.
$C_{23} = 2a_\beta$		$= 2\sum_i C_{r_i}(r_i+\varepsilon_4) r_i \cos\gamma_0 = 2\int_0^L C_{r_i}(r_i+\varepsilon_4) r_i \cos\gamma_0\, dr_i = 2C_{r_i} L^2\left[\frac{L}{3}+\frac{\varepsilon_4}{2}\right]\cos\gamma_0$	0	1525000.	1525000.
K_{33}		$= 2 h_3^2 K_{t_{yw}} \cos^2\gamma_0 + 2\varepsilon_3^2 K_{t_{zw}} + 2K_{\alpha w}$	0	6148000.	6148000.
$C_{33} = 2C_{\alpha w} + 2a_\beta$		$= 2C_{\alpha w} + 2\sum_i C_{r_i} r_i^2 \cos^2\gamma_0 = 2C_{\alpha w} + 2\int_0^L C_{r_i} r_i^2 \cos^2\gamma_0\, dr_i = 2C_{\alpha w} + 2\frac{2C_{r_i} L}{3}\cos^2\gamma_0$	0	822400.	822400.

$$c_1 = \left(\tfrac{1}{2}\rho a_\infty c_0\right)\cdot 2\Omega\theta_0 \int r_\beta (e_\beta + r_\beta)\, dr_\beta - \left(\tfrac{1}{2}\rho a_\infty c_0\right)\nu \int r_\beta\, dr_\beta$$

$$c_2 = \left(\tfrac{1}{2}\rho a_\infty c_0\right)\Omega\beta_0 \int r_\beta (e_\beta + r_\beta)\, dr_\beta$$

$$c_3 = \left(\tfrac{1}{2}\rho a_\infty c_0\right)\cdot 2\Omega\theta_0 h_F \int r_\beta (e_\beta + r_\beta)\, dr_\beta - \left(\tfrac{1}{2}\rho a_\infty c_0\right)\nu h_F \int r_\beta\, dr_\beta = c_1 h_F$$

$$c_4 = \left(\tfrac{1}{2}\rho a_\infty c_0\right)\Omega\beta_0 h_F \int r_\beta (e_\beta + r_\beta)\, dr_\beta + \left(\tfrac{1}{2}\rho a_\infty c_0\right)\Omega \int r_\beta (e_\beta + r_\beta)^2\, dr_\beta = c_2 h_F - c_5$$

$$c_5 = -\left(\tfrac{1}{2}\rho a_\infty c_0\right)\Omega \int r_\beta^2 (e_\beta + r_\beta)\, dr_\beta$$

$$c_6 = \left(\tfrac{1}{2}\rho a_\infty c_0\right)\cdot 2\Omega\theta_0 \int r_\beta (e_\beta + r_\beta)(r_\beta - \Delta e)\, dr_\beta - \left(\tfrac{1}{2}\rho a_\infty c_0\right)\nu \int r_\beta (r_\beta - \Delta e)\, dr_\beta$$

NUMERICAL VALUES

$$\left(\tfrac{1}{2}\rho a_\infty c_0\right) = \tfrac{1}{2}\left(.1147\times 10^{-6}\right)(5.75)(18.) = 5.936\times 10^{-6}$$

$$c_1 = (5.936\times 10^{-6})(2)(\Omega)(.2443)(6.133\times 10^{6}) - (5.936\times 10^{-6})(108.1)(.03485\times 10^{6})$$

$$c_2 = (5.936\times 10^{-6})(\Omega)(.09226)(6.133\times 10^{6})$$

$$c_3 = c_1 h_F$$

$$c_4 = c_2 h_F - c_5$$

$$c_5 = -(5.936\times 10^{-6})(\Omega)(1214.\times 10^{6})$$

$$c_6 = (5.936\times 10^{-6})(2)(\Omega)(.2443)(1214 \qquad .133\times 10^{6})$$

C	WITHOUT WINGS $h_F = 84$	$h_F = 89$	100% FUEL $h_F = 95$
$c_1 = 17.79\Omega - 22.36$	→	→	→
$c_2 = 3.359\,\Omega$	→	→	→
$c_3 = (17.79\Omega - 22.36)\,h_F$	$1494\Omega - 1878$	$1583\Omega - 1990$	$1690\Omega - 2124$
$c_4 = (3.359\,h_F + 7206.)\Omega$	7488Ω	7505Ω	7525Ω
$c_5 = -7206.\,\Omega$	→	→	→
$c_6 = 3520\Omega - 3935.$	→	→	→

REV

B	EXPRESSION	WITHOUT WINGS $h_A = h_F = 84.$	0% FUEL $h_A = h_F = 89.$	100% FUEL $h_A = h_F = 95.$
B_1	$\frac{T_F + T_A}{M_{11}}$	$386.4 = g$	298.1	176.8
B_2	$-2\sigma_\xi / M_{11}$	-1.854	-1.430	$-.8485$
B_3	$-\frac{2}{3} B_1$	-257.6	-198.7	-117.9
B_4	$-C_{22}/M_{22}$	0	-4.112	-1.101
B_5	$-\frac{2\sum(\varepsilon_4 + r_i) r_i m_i \omega \beta_0}{M_{22}}$	0	$-.4813$	$-.5153$
B_6	$-C_{23}/M_{22}$	0	-2.180	$-.5838$
B_7	$-\frac{h_F + h_A}{M_{22}} \sigma_\xi$	$-.09069$	$-.008243$	$-.002356$
B_8	$-\frac{2}{3} \frac{T_F h_F + T_A h_A}{M_{22}}$	-12.60	-1.145	$-.3274$
B_9	$-C_{33}/M_{33}$	0	-4.524	-1.131
B_{10}	$-K_{33}/M_{33}$	0	-33.82	-8.457
B_{11}	$-M_{23}/M_{33}$	0	-2.501	-1.851
B_{12}	$-C_{23}/M_{33}$	0	-8.388	-2.098
B_{13}	$-\frac{r_0^2}{I_\xi}\left[\frac{4P}{\pi r_0 \xi \Omega}\sqrt{\frac{I_\xi}{\xi \sigma_\xi}} + C\right]$	$-\frac{29.11}{\Omega} - .8595$	→	→
B_{14}	$\Omega^2\left(1 - \frac{e_\xi \sigma_\xi}{I_\xi}\right)$	$.9125\,\Omega^2$	→	→
B_{15}	2Ω	2Ω	→	→
B_{16}	$-B_{13}\Omega$	$.8595\Omega + 29.11$	→	→
B_{17}	$2\left(\frac{\Delta e \sigma_\xi + I_\xi}{I_\xi}\right)\beta_0 \Omega$	$.1953\Omega$	→	→
B_{18}	$-B_{17}\Omega$	$-.1953\,\Omega^2$	→	→
B_{19}	B_{13}	$-\frac{29.11}{\Omega} - .8595$	→	→
B_{20}	B_{14}	$.9125\,\Omega^2$	→	→
B_{21}	$-B_{15}$	-2Ω	→	→

REV

CONT'D

B_{22}	$B_{13}\,\Omega$	$-.8595\,\Omega - 29.11$	→	→
B_{23}	$B_{17}\,\Omega$	$.1953\,\Omega^2$	→	→
B_{24}	B_{17}	$.1953\,\Omega$	→	→
B_{25}	$-\frac{3}{2}\frac{\sigma_\xi}{I_\xi}$	$-.009446$	→	→
B_{26}	$B_{25}\,h_F$	$-.7935$	$-.8406$	$-.8973$
B_{27}	c_5/I_β	$-1.240\,\Omega$	→	→
B_{28}	$-\frac{e_\beta \sigma_\beta \Omega^2}{I_\beta}$	$-.02894\,\Omega^2$	→	→
B_{29}	B_{15}	$2\,\Omega$	→	→
B_{30}	$-B_{27}\,\Omega$	$1.240\,\Omega^2$	→	→
B_{31}	$66/I_\beta$	$.0566\,\Omega - .6786$	→	→
B_{32}	$-B_{34}\,\Omega$	$.056\,\Omega^2 + .6786\,\Omega$	→	→
B_{33}	$\frac{3}{2}\frac{c_2}{I_\beta}$	$.0008669\,\Omega$	→	→
B_{34}	$\frac{3}{2}\frac{c_4}{I_\beta}$	$1.933\,\Omega$	$1.937\,\Omega$	$1.942\,\Omega$
B_{35}	B_{27}	$-1.240\,\Omega$	→	→
B_{36}	B_{28}	$-.02894\,\Omega^2$	→	→
B_{37}	$-B_{15}$	$-2\,\Omega$	→	→
B_{38}	$B_{27}\,\Omega$	$-1.240\,\Omega^2$	→	→
B_{39}	$B_{31}\,\Omega$	$.6056\,\Omega^2 - .6786\,\Omega$	→	→
B_{40}	B_{31}	$.6056\,\Omega - .6786$	→	→
B_{41}	$\frac{3}{2}\frac{c_1}{I_\beta}$	$.004589\,\Omega - .005771$	→	→
B_{42}	$\frac{3}{2}\frac{c_3}{I_\beta}$	$.3856\,\Omega - .4847$	$.4085\,\Omega - .5136$	$.4362\,\Omega - .5482$
B_{43}	$-\frac{1}{3\Omega}\,B_1$	$-128.8/\Omega$	$-99.36/\Omega$	$-58.93/\Omega$
B_{44}	$\frac{1}{2\Omega}\,B_8$	$-6.3/\Omega$	$-.5726/\Omega$	$-.1637/\Omega$

REV

THE ORIGINAL DOCUMENT [illegible] QUALITY. [illegible] FROM COPY FURNISHED [illegible]

THE ORIGINAL DOCUMENT WAS OF POOR QUALITY. BEST REPRODUCIBLE COPY FROM COPY FURNISHED ASTIA

MECHANICAL INSTABILITY ANALYSIS
H-21 HELICOPTER RANGE EXTENSION

BASIC DATA — WITHOUT WINGS

Ω, RPM	50	100	150	200	240	258	280	320
Ω, RAD/SEC	5.236	10.47	15.79	20.94	25.13	27.02	29.32	33.51
B_1	386.4	→	→	→	→	→	→	→
B_2	-1.854	→	→	→	→	→	→	→
B_3	-257.6	→	→	→	→	→	→	→
B_4	0	→	→	→	→	→	→	→
B_5	0	→	→	→	→	→	→	→
B_6	0	→	→	→	→	→	→	→
B_7	-.09069	→	→	→	→	→	→	→
B_8	-12.60	→	→	→	→	→	→	→
B_9	0	→	→	→	→	→	→	→
B_{10}	0	→	→	→	→	→	→	→
B_{11}	0	→	→	→	→	→	→	→
B_{12}	0	→	→	→	→	→	→	→
B_{13}	-6.419	-3.640	-2.703	-2.250	-2.018	-1.946	-1.852	-1.728
B_{14}	25.02	100.0	227.5	400.1	576.2	666.2	784.4	1024.
B_{15}	10.47	20.94	31.58	41.88	50.26	54.04	58.64	67.02
B_{16}	33.61	38.11	42.68	47.11	50.71	52.58	54.31	57.91
B_{17}	1.023	2.045	3.084	4.090	4.908	5.276	5.726	6.545
B_{18}	-5.356	-21.41	-48.70	-85.64	-123.3	-142.6	-167.9	-219.3
B_{19}	-6.419	-3.640	-2.703	-2.250	-2.018	-1.946	-1.852	-1.728
B_{20}	25.02	100.0	227.5	400.1	576.2	666.2	784.4	1024.
B_{21}	-10.47	-20.94	-31.58	-41.88	-50.26	-54.04	-58.64	-67.02
B_{22}	-33.61	-38.11	-42.68	-47.11	-50.71	-52.58	-54.31	-57.91
B_{23}	5.356	21.41	48.70	85.74	123.3	142.6	167.9	219.3
B_{24}	1.023	2.045	3.084	4.090	4.908	5.276	5.726	6.545
B_{25}	-.009446	→	→	→	→	→	→	→
B_{26}	-.7935	→	→	→	→	→	→	→
B_{27}	-6.493	-12.98	-19.58	-25.97	-31.16	-33.50	-36.36	-41.55
B_{28}	-.7934	-3.172	-7.215	-12.69	-18.28	-21.12	-24.28	-32.50
B_{29}	10.47	20.94	31.58	41.88	50.26	54.04	58.64	67.02
B_{30}	34.0	135.9	309.2	543.4	783.1	905.2	1066.	1392.
B_{31}	2.492	5.662	8.884	12.0	14.54	15.69	17.08	19.62
B_{32}	-13.05	-59.28	-140.3	-251.3	-365.4	-423.9	-500.8	-657.5
B_{33}	.004539	.009076	.01369	.01815	.02179	.02342	.02542	.0290
B_{34}	10.12	20.24	30.52	40.48	48.58	52.22	56.68	64.77
B_{35}	-6.493	-12.98	-19.58	-25.97	-31.16	-33.50	-36.36	-41.55
B_{36}	-.7934	-3.172	-7.215	-12.69	-18.28	-21.12	-24.28	-32.50
B_{37}	-10.47	-20.94	-31.58	-41.88	-50.26	-54.04	-58.64	-67.02
B_{38}	-34.0	-135.9	-309.2	-543.4	-783.1	-905.2	-1066.	-1392.
B_{39}	13.05	59.28	140.3	251.3	365.4	423.9	500.8	657.5
B_{40}	2.492	5.662	8.884	12.00	14.54	15.69	17.08	19.62
B_{41}	.01826	.04228	.06669	.09032	.1096	.1182	.1288	.1480
B_{42}	1.534	3.553	5.604	7.590	9.205	9.935	10.82	12.44
B_{43}	-24.60	-12.30	-8.167	-6.150	-5.125	-4.767	-4.393	-3.844
B_{44}	-1.203	-.6017	-.3990	-.3006	-.2507	-.2332	-.2149	-.1880

REV

MECHANICAL INSTABILITY ANALYSIS
H-21 HELICOPTER RANGE EXTENSION

0% FUEL IN WINGS

BASIC DATA

Ω, RPM	50	100	150	200	240	258	280	320
Ω, RAD/SEC	5.236	10.47	15.79	20.94	25.13	27.02	29.32	33.51
B_1	298.1	→						
B_2	-1.430	→						
B_3	-198.7	→						
B_4	-4.112	→						
B_5	-0.4813	→						
B_6	-2.180	→						
B_7	-.008243	→						
B_8	-1.145	→						
B_9	-4.524	→						
B_{10}	-33.82	→						
B_{11}	-2.501	→						
B_{12}	-8.388	→						
B_{13}	-6.419	-3.640	-2.703	-2.250	-2.018	-1.946	-1.852	-1.728
B_{14}	25.02	100.0	227.5	400.1	576.2	666.2	784.4	1024.0
B_{15}	10.47	20.94	31.58	41.88	50.26	54.04	58.64	167.02
B_{16}	33.61	38.11	42.68	47.11	50.71	52.58	54.31	57.91
B_{17}	1.023	2.045	3.084	4.090	4.908	5.276	5.726	6.545
B_{18}	-5.356	-21.41	-48.70	-85.64	-123.3	-142.6	-167.9	-219.3
B_{19}	-6.419	-3.640	-2.703	-2.250	-2.018	-1.946	-1.852	-1.728
B_{20}	25.02	100.0	227.5	400.1	576.2	666.2	784.4	1024.
B_{21}	-10.47	-20.94	-31.58	-41.88	-50.26	-54.04	-58.64	-67.02
B_{22}	-33.61	-38.11	-42.68	-47.11	-50.71	-52.58	-54.31	-57.91
B_{23}	5.356	21.41	48.70	85.64	123.3	142.6	167.9	219.3
B_{24}	1.023	2.045	3.084	4.090	4.908	5.276	5.726	6.545
B_{25}	-.009446	→						
B_{26}	-.8406	→						
B_{27}	-6.493	-12.98	-19.58	-25.97	-31.16	-33.50	-36.36	-41.55
B_{28}	-.7934	-3.172	-7.215	-12.69	-18.28	-21.12	-24.28	-32.50
B_{29}	10.49	20.94	31.58	41.88	50.26	54.04	58.64	67.02
B_{30}	34.0	135.9	309.2	543.8	783.1	5.2	1066.	1392.
B_{31}	2.492	5.662	8.884	12.0	14.54	15.69	17.08	19.62
B_{32}	-13.05	-59.28	-140.3	-251.3	-365.4	-423.9	-500.8	-657.5
B_{33}	.004539	.009076	.01369	.01815	.02179	.02342	.02542	.029
B_{34}	10.14	20.28	30.59	40.56	48.68	52.34	56.79	64.91
B_{35}	-6.493	-12.98	-19.58	-25.97	-31.16	-33.50	-36.36	-41.55
B_{36}	-.7934	-3.172	-7.215	-12.69	-18.28	-21.12	-24.28	-32.50
B_{37}	-10.47	-20.94	-31.58	-41.88	-50.26	-54.04	-58.64	-67.02
B_{38}	-34.0	-135.9	-309.2	-543.8	-783.1	-905.2	-1066.	-1392.
B_{39}	13.05	59.28	140.3	251.3	365.4	423.9	500.8	657.5
B_{40}	2.492	5.662	8.884	12.0	14.54	15.69	17.08	19.62
B_{41}	.01826	.04228	.06669	.09032	.1096	.1182	.1288	.1480
B_{42}	1.626	3.763	5.937	8.041	9.756	10.53	11.47	13.18
B_{43}	-18.98	-9.491	-6.293	-4.745	-3.954	-3.677	-3.384	-2.965
B_{44}	-.1094	-.05469	-.03626	-.02734	-.02279	-.02119	-.01953	-.01709

REV

MECHANICAL INSTABILITY ANALYSIS

H-21 HELICOPTER RANGE EXTENSION

100% FUEL IN WINGS

BASIC DATA

Ω, RPM	50	100	150	200	240	258	280	320
Ω, RAD/SEC	5.236	10.47	15.79	20.94	25.13	27.02	29.32	33.51
B_1	176.8	→	→	→	→	→	→	→
B_2	-.8485	→	→	→	→	→	→	→
B_3	-117.9	→	→	→	→	→	→	→
B_4	-1.101	→	→	→	→	→	→	→
B_5	-.5153	→	→	→	→	→	→	→
B_6	-.5838	→	→	→	→	→	→	→
B_7	-.002356	→	→	→	→	→	→	→
B_8	-.3274	→	→	→	→	→	→	→
B_9	-1.131	→	→	→	→	→	→	→
B_{10}	-8.457	→	→	→	→	→	→	→
B_{11}	-1.851	→	→	→	→	→	→	→
B_{12}	-2.098	→	→	→	→	→	→	→
B_{13}	-6.419	-3.640	-2.703	-2.250	-2.018	-1.946	-1.852	-1.728
B_{14}	25.02	100.0	227.5	400.1	576.2	666.2	784.4	1024.
B_{15}	10.47	20.94	31.58	41.88	50.26	54.04	58.64	67.02
B_{16}	33.61	38.11	42.68	47.11	50.71	52.58	54.31	57.91
B_{17}	1.023	2.045	3.084	4.090	4.908	5.276	5.726	6.545
B_{18}	-5.356	-21.41	-48.70	-85.64	-123.3	-142.6	-167.9	-219.3
B_{19}	-6.419	-3.640	-2.703	-2.250	-2.018	-1.946	-1.852	-1.728
B_{20}	25.02	100.0	227.5	400.1	576.2	666.2	784.4	1024.
B_{21}	-10.47	-20.94	-31.58	-41.88	-50.26	-54.04	-58.64	-67.02
B_{22}	-33.61	-38.11	-42.68	-47.11	-50.71	-52.58	-54.31	-57.91
B_{23}	5.356	21.41	48.70	85.64	123.3	142.6	167.9	219.3
B_{24}	1.023	2.045	3.084	4.090	4.908	5.276	5.726	6.545
B_{25}	-.009446	→	→	→	→	→	→	→
B_{26}	-.8973	→	→	→	→	→	→	→
B_{27}	-6.493	-12.98	-19.58	-25.97	-31.16	-33.50	-36.36	-41.55
B_{28}	-.7934	-3.172	-7.215	-12.69	-18.28	-21.12	-24.28	-32.50
B_{29}	10.47	20.94	31.58	41.88	50.26	54.04	58.64	67.02
B_{30}	34.00	135.9	309.2	543.4	783.1	905.2	1066.	1392.
B_{31}	2.492	5.662	8.884	12.00	14.54	15.69	17.08	19.62
B_{32}	-13.05	-59.28	-140.3	-251.3	-365.4	-423.9	-500.8	-657.5
B_{33}	.004539	.009076	.01369	.01815	.02179	.02342	.02542	.0290
B_{34}	10.13	20.25	30.54	40.50.	48.60	52.47	56.70	64.81
B_{35}	-6.493	-12.98	-19.58	-25.97	-31.16	-33.50	-36.36	-41.55
B_{36}	-.7934	-3.172	-7.215	-12.69	-18.28	-21.12	-24.28	-32.50
B_{37}	-10.47	-20.94	-31.58	-41.88	-50.26	-54.04	-58.64	-67.02
B_{38}	-34.00	-135.9	-309.2	-543.4	-783.1	-905.2	-1066.	-1392.
B_{39}	13.05	59.28	140.3	251.3	365.4	423.9	500.8	657.5
B_{40}	2.492	5.6662	8.884	12.00	14.54	15.69	17.08	19.62
B_{41}	.01826	.04228	.06669	.09032	.1096	.1182	.12.88	.1480
B_{42}	1.736	4.018	6.339	8.585	10.41	11.24	12.24	14.07
B_{43}	-11.26	-5.629	-3.733	-2.815	-2.345	-2.181	-2.010	-1.759
B_{44}	-.03126	-.01564	-.01036	-.007818	-.006514	-.006058	-.005583	-.004885

REV

APPENDIX B

4. AIR INSTABILITY CALCULATIONS

VERTOL H-25

REV

REV

NUMERICAL DATA H-25 HELICOPTER

SYMBOL	DIMENSION	DESCRIPTION	WITHOUT WINGS	0% FUEL	100% FUEL
ρ	LBS-SEC^2/IN^4	AIR MASS DENSITY	$.1147 \times 10^{-6}$	→	→
a_∞	–	SLOPE OF AIRFOIL LIFT CURVE	5.75	→	→
C_0	IN	CHORD OF ROTOR BLADE	13	→	→
Ω	RAD/SEC	ROTOR SPEED	–	–	–
r_B	IN	SPANWISE COORDINATE ALONG THE BLADE	–	–	–
θ_0	RAD	COLLECTIVE PITCH ANGLE	.2743	→	→
e_β	IN	FLAP HINGE OFFSET	2	→	→
I_β	LBS-SEC^2-IN	BLADE FLAP INERTIA	2017.	→	→
β_0	RAD	CONSTANT FLAP ANGLE	.09226	→	→
r_0	IN	RADIAL ARM OF BLADE DAMPER	4.5	→	→
ζ_0	RAD	SINGLE AMPLITUDE OF BLADE LAG MOTION	.08727	→	→
e_ζ	IN	LAG HINGE OFFSET	15	→	→
σ_ζ	LBS-SEC^2	BLADE LAG MOMENT	9.909	→	→
I_ζ	LBS-SEC^2-IN	BLADE LAG INERTIA	1219.	→	→
P	LBS	PRELOAD OF ROTOR BLADE LAG DAMPER	300.	→	→
C	LBS/$\frac{IN}{SEC}$	VISCOUS PORTION OF BLADE LAG DAMPER	0	→	→
$T_A = T_R$	LBS	THRUST	2695	→	→
$h_A = h_R$	IN	ROTOR VERTICAL DISTANCE CG TO HUB	74	77	82.85
Δe	IN	$e_\zeta - e_\beta$	13	→	→
v	IN/SEC	INDUCED VELOCITY $= T/2\rho A_0 V \cos\alpha_R$ $\begin{cases} R = 210'' \\ \alpha_r = -9° \end{cases}$	52.99	→	→
σ_β	LBS-SEC^2	BLADE FLAP MOMENT	15.13	→	→
M_{22}	LBS-SEC^2-IN	$= I_x$ = ROLL INERTIA OF AIRCRAFT ABOUT CG - TOTAL	10950.	65860.	231200
M_{11}	LBS-SEC^2/IN	MASS OF AIRCRAFT INCLUDING WINGS AND BLADES = M	13.95	15.89	21.71
M_{33}		$= 2\sum m_i r_i^2 \cos^2\beta_0$	0	8500	34000
M_{23}		$= 2\sum m_i (\varepsilon_4 + r_i) r_i \cos\beta_0$	0	21069	84274
C_{22}		$= 2\sum C_{r_i}(r_i+\varepsilon_4)^2 = 2\int_0^L (\frac{1}{2}\rho a_{\infty} C_0 v)(r_i+\varepsilon_4)^2 dr_i = \frac{2}{3}C_{r_i}\left[(L+\varepsilon_4)^3 - \varepsilon_4^3\right]$	0	141820	→
C_{23}		$= 2\sum C_{r_i}(r_i+\varepsilon_4) r_i \cos\beta_0 = 2\int_0^L C_{r_i}(r_i+\varepsilon_4) r_i \cos\beta_0 \, dr_i = 2C_{r_i} L^2\left[\frac{L}{3} + \frac{\varepsilon_4}{2}\right]\cos\beta_0$	0	107860	→
K_{33}		$= 2h_3^2 K_{\beta y w} \cos^2\beta_0 + 2\varepsilon_3^2 K_{\alpha z w} + 2K_{\alpha w}$	0	246700	→
C_{33}		$= 2C_{\alpha w} + 2\sum C_{r_i} r_i^2 \cos^2\beta_0 = 2C_{\alpha w} + 2\int_0^L C_{r_i} r_i^2 \cos^2\beta_0 \, dr_i = 2C_{\alpha w} + \overbrace{2C_{r_i}\frac{L^3}{3}\cos^2\beta_0}^{2C_{\alpha w}}$	0	43520	→

PREPARED BY:
CHECKED BY:
DATE: June 1960

VERTOL AIRCRAFT CORPORATION

PAGE NO. B-43
REPORT NO. R-197
MODEL NO. HUP-2 (H-25)

BLADE PARAMETERS

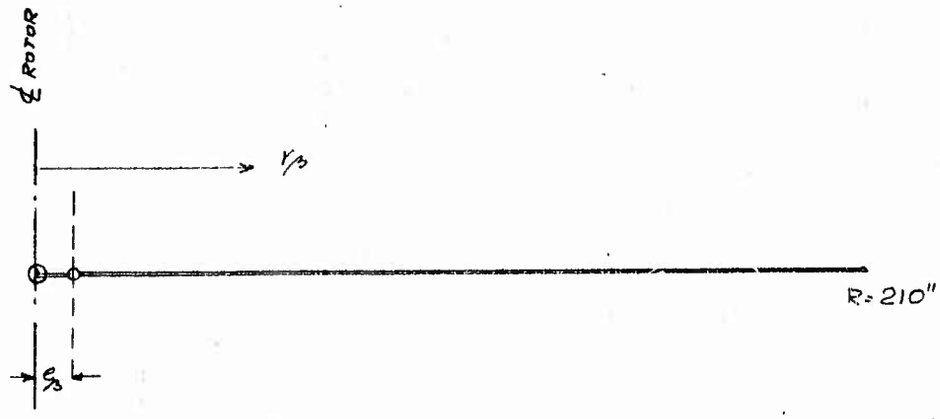

1- $$\int_2^{210} r_s(e_s + r_s)\,dr_s = \left[\frac{e_s r_s^2}{2} + \frac{r_s^3}{3}\right]_2^{210} \simeq 3.131 \times 10^6$$

2- $$\int_2^{210} r_s(e_s + r_s)^2\,dr_s = \left[\frac{e_s^2 r_s^2}{2} + 2\,e_s\frac{r_s^3}{3} + \frac{r_s^4}{4}\right]_2^{210} \simeq 498.6 \times 10^6$$

3- $$\int_2^{210} r_s\,dr_s = \left.\frac{r_s^2}{2}\right|_2^{210} \simeq .02205 \times 10^6$$

4- $$\int_2^{210} r_s^2\,(e_s + r_s)\,dr_s = \left[e_s\frac{r_s^3}{3} + \frac{r_s^4}{4}\right]_2^{210} \simeq 492.4 \times 10^6$$

5- $$\int_2^{210} r_s^2\,dr_s = \left.\frac{r_s^3}{3}\right]_2^{210} \simeq 3.087 \times 10^6$$

6- $$\int_2^{210} r_s(e_s + r_s)(r_s - \Delta e_s)\,dr_s = \left[\frac{r_s^3}{3}(e_s - \Delta e) - \Delta e\,e_s\frac{r_s^2}{2} + \frac{r_s^4}{4}\right]_2^{210} = +51.7 \times 10^6$$

7- $$\int_2^{210} r_s(r_s - \Delta e)\,dr_s = \left[\frac{r_s^3}{3} - \Delta e\,\frac{r_s^2}{2}\right]_2^{210} = 2.800 \times 10^6$$

REV

$$c_1 = \left(\tfrac{1}{2}\rho a_\infty C_0\right) 2\Omega\,\theta_0 \int r_s (e_s + r_s)\,dr_s - \left(\tfrac{1}{2}\rho a_\infty C_0\right) v \int r_s\,dr_s$$

$$c_2 = \left(\tfrac{1}{2}\rho a_\infty C_0\right) \Omega\,\beta_0 \int r_s (e_s + r_s)\,dr_s$$

$$c_3 = c_1 h_F$$

$$c_4 = c_2 h_F - c_5$$

$$c_5 = -\left(\tfrac{1}{2}\rho a_\infty C_0\right) \Omega \int r_s^2 (e_s + r_s)\,dr_s$$

$$c_6 = \left(\tfrac{1}{2}\rho a_\infty C_0\right) 2\Omega\,\theta_0 \int r_s (e_s + r_s)(r_s - \Delta e)\,dr_s - \left(\tfrac{1}{2}\rho a_\infty C_0\right) v \int r_s (r_s - \Delta e)\,dr_s$$

NUMERICAL VALUES

$$\left(\tfrac{1}{2}\rho a_\infty C_0\right) = \tfrac{1}{2}\left(.1147\times10^{-6}\right)(5.75)(13) = 4.287\times10^{-6}$$

$$c_1 = \left(4.287\times10^{-6}\right) 2\Omega\,(.2443)\left(3.131\times10^{6}\right) - \left(4.287\times10^{-6}\right)(52.99)\left(.02205\times10^{6}\right)$$

$$c_2 = \left(4.287\times10^{-6}\right)\Omega\,(.09226)\left(3.131\times10^{6}\right)$$

$$c_3 = c_1 h_F$$

$$c_4 = c_2 h_F - c_5$$

$$c_5 = -\left(4.287\times10^{-6}\right)\Omega\,\left(492.4\times10^{6}\right)$$

$$c_6 = \left(4.287\times10^{-6}\right) 2\Omega\,(.2443)\left(451.7\times10^{6}\right) - \left(4.287\times10^{-6}\right)(52.99)\left(2.8\times10^{6}\right)$$

C	WITHOUT WINGS $h_F = 74.$	0% FUEL $h_F = 77.$	100% FUEL $h_F = 82.85''$
$c_1 = 6.558\Omega - 5.009$	→	→	→
$c_2 = 1.238\,\Omega$	→	→	→
$c_3 = (6.558\Omega - 5.009)h_F$	$485.3\Omega - 370.7$	$505.\Omega - 385.7$	$543.3\Omega - 415.0$
$c_4 = (1.238 h_F + 2111)\Omega$	$2203.\Omega$	$2206.\Omega$	$2214\,\Omega$
$c_5 = -2111\,\Omega$	→	→	→
$c_6 = 946.1\,\Omega - 636.1$	→	→	→

REV

B	EXPRESSION	WITHOUT WINGS	0% FUEL	100% FUEL
B_1	$\frac{T_F + T_A}{M_{11}}$	386.4	339.2	248.3
B_2	$-2\sigma_S / M_{11}$	-1.421	-1.247	-.9129
B_3	$-\frac{2}{3} B_1$	-257.6	-226.1	-165.5
B_4	$-C_{22} / M_{22}$	0	-2.153	-.6134
B_5	$-M_{23} / M_{22}$	0	-.3199	-.3645
B_6	$-C_{23} / M_{22}$	0	-1.638	-.4665
B_7	$-\frac{h_F + h_A}{M_{22}} \sigma_S$	-.1339	-.02317	-.007102
B_8	$-\frac{2}{3} \frac{T_F h_F + T_A h_A}{M_{22}}$	-24.28	-4.201	-1.288
B_9	$-C_{33} / M_{33}$	0	-5.120	-1.280
B_{10}	$-K_{33} / M_{33}$	0	-29.02	-7.256
B_{11}	$-M_{23} / M_{33}$	0	-2.479	-2.479
B_{12}	$-C_{23} / M_{33}$	0	-12.69	-3.172
B_{13}	$-\frac{r_0^2}{I_S}\left[\frac{4P}{\pi r_0 S_0 \Omega}\sqrt{\frac{I_S}{e_S \sigma_S}} + C\right]$	$-\frac{46.30}{\Omega}$	→	→
B_{14}	$\Omega^2 (1 - e_S \sigma_S / I_S)$	$.8781\,\Omega^2$	→	→
B_{15}	2Ω	2Ω	→	→
B_{16}	$-B_{13}\Omega$	46.30	→	→
B_{17}	$2\frac{(\Delta e \sigma_S + I_S)}{I_S} \beta_0 \Omega$	$.2040\,\Omega$	→	→
B_{18}	$-B_{17}\Omega$	$-.2040\,\Omega^2$	→	→
B_{19}	B_{13}	$-\frac{46.30}{\Omega}$	→	→
B_{20}	B_{14}	$.8781\,\Omega^2$	→	→
B_{21}	$-B_{15}$	-2Ω	→	→

REV

CONT'D.

B_{22}	$B_{13}\Omega$	-46.30	→	→
B_{23}	$B_{17}\Omega$	$.2040\Omega^2$	→	→
B_{24}	B_{17}	$.2040\Omega$	→	→
B_{25}	$-\frac{3}{2}\frac{\sigma_5}{I_5}$	$-.01219$	→	→
B_{26}	$B_{25}\,h_F$	$-.9021$	$-.9386$	-1.010
B_{27}	c_5/I_3	-1.047Ω	→	→
B_{28}	$-\frac{e_3\sigma_3}{I_3}\Omega^2$	$-.01500\Omega^2$	→	→
B_{29}	B_{15}	2Ω	→	→
B_{30}	$-B_{27}\Omega$	$1.047\Omega^2$	→	→
B_{31}	c_6/I_3	$.4691\Omega-.3154$	→	→
B_{32}	$-B_{31}\Omega$	$-.4691\Omega^2+.3154\Omega$	→	→
B_{33}	$\frac{3}{2}\frac{c_2}{I_3}$	$.0009207\Omega$	→	→
B_{34}	$\frac{3}{2}\frac{c_4}{I_3}$	1.638Ω	1.640Ω	1.647Ω
B_{35}	B_{27}	-1.047Ω	→	→
B_{36}	B_{28}	$-.01500\Omega^2$	→	→
B_{37}	$-B_{15}$	-2Ω	→	→
B_{38}	$B_{27}\Omega$	$-1.047\Omega^2$	→	→
B_{39}	$B_{31}\Omega$	$.4691\Omega^2-.3154\Omega$	→	→
B_{40}	B_{31}	$.4691\Omega-.3154$	→	→
B_{41}	$\frac{3}{2}\frac{c_1}{I_3}$	$.0048775\Omega-.003725$	→	→
B_{42}	$\frac{3}{2}\frac{c_3}{I_3}$	$.3609\Omega-.2757$	$.3756\Omega-.2868$	$.4040\Omega-.3086$
B_{43}	$-\frac{1}{3\Omega}B_1$	$-128.8/\Omega$	$-113.1/\Omega$	$-82.77/\Omega$
B_{44}	$\frac{1}{2\Omega}B_8$	$-12.14/\Omega$	$-2.101/\Omega$	$-.6440/\Omega$

REV

MECHANICAL INSTABILITY ANALYSIS

HELICOPTER RANGE EXTENSION

BASIC DATA

RPM	240	290	340
RAD/SEC	25.12	30.35	35.59
B_1	386.4	→	→
B_2	-1.421	→	→
B_3	-257.6	→	→
B_4	0	→	→
B_5	0	→	→
B_6	0	→	→
B_7	-.1339	→	→
B_8	-24.28	→	→
B_9	0	→	→
B_{10}	0	→	→
B_{11}	0	→	→
B_{12}	0	→	→
B_{13}	-1.843	-1.526	-1.301
B_{14}	554.1	808.8	1112.
B_{15}	50.24	60.70	71.18
B_{16}	46.30	→	→
B_{17}	5.124	6.191	7.260
B_{18}	-128.7	-187.9	-258.4
B_{19}	-1.843	-1.526	-1.301
B_{20}	554.1	808.8	1112.
B_{21}	-50.24	-60.70	-71.18
B_{22}	-46.30	→	→

WITHOUT WINGS

RPM	240	290	340
RAD/SEC	25.12	30.35	35.59
B_{23}	128.7	187.9	258.4
B_{24}	5.124	6.191	7.260
B_{25}	-.01219	→	→
B_{26}	-.9021	→	→
B_{27}	-26.30	-31.78	-37.26
B_{28}	-9.465	-13.82	-19.00
B_{29}	50.24	60.70	71.18
B_{30}	660.7	964.5	1326.
B_{31}	11.47	13.92	16.38
B_{32}	-288.1	-422.5	-583.0
B_{33}	.02313	.02794	.03277
B_{34}	41.15	49.71	58.30
B_{35}	-26.30	-31.78	-37.26
B_{36}	-9.465	-13.82	-19.00
B_{37}	-50.24	-60.70	-71.18
B_{38}	-660.7	-964.5	-1326.
B_{39}	288.1	422.5	583.0
B_{40}	11.47	13.92	16.38
B_{41}	.1188	.1443	.1698
B_{42}	8.790	10.68	12.57
B_{43}	-5.127	-4.244	-3.619
B_{44}	-.4833	-.4000	-.3411

REV

MECHANICAL INSTABILITY ANALYSIS

HELICOPTER RANGE EXTENSION

BASIC DATA

RPM	240	290	340
RAD/SEC	25.12	30.35	35.59
B_1	339.2	→	→
B_2	-1.247	→	→
B_3	-226.1	→	→
B_4	-2.153	→	→
B_5	-.3199	→	→
B_6	-1.638	→	→
B_7	-.02317	→	→
B_8	-4.201	→	→
B_9	-5.120	→	→
B_{10}	-29.02	→	→
B_{11}	-2.479	→	→
B_{12}	-12.69	→	→
B_{13}	-1.843	-1.526	-1.301
B_{14}	554.1	808.8	1112.
B_{15}	50.24	60.70	71.18
B_{16}	46.30	→	→
B_{17}	5.124	6.191	7.260
B_{18}	-128.7	-187.9	-258.4
B_{19}	-1.843	-1.526	-1.301
B_{20}	554.1	808.8	1112.
B_{21}	-50.24	-60.70	-71.18
B_{22}	-46.30	→	→

REV

0% FUEL

RPM	240	290	340
RAD/SEC	25.12	30.35	35.59
B_{23}	128.7	187.9	258.4
B_{24}	5.124	6.191	7.260
B_{25}	-.01219	→	→
B_{26}	-.9386	→	→
B_{27}	-26.30	-31.78	-37.26
B_{28}	-9.465	-13.82	-19.00
B_{29}	50.24	60.70	71.18
B_{30}	660.7	964.5	1326
B_{31}	11.47	13.92	16.38
B_{32}	-288.1	-422.5	-583.0
B_{33}	.02313	.02794	.03277
B_{34}	41.20	49.77	58.37
B_{35}	-26.30	-31.78	-37.26
B_{36}	-9.465	-13.82	-19.00
B_{37}	-50.24	-60.70	-71.18
B_{38}	-660.7	-964.5	-1326
B_{39}	288.1	422.5	583.0
B_{40}	11.47	13.92	16.38
B_{41}	.1188	.1443	.1698
B_{42}	9.148	11.11	13.08
B_{43}	-4.502	-3.727	-3.178
B_{44}	-.08363	-.06922	-.05903

MECHANICAL INSTABILITY ANALYSIS

HELICOPTER RANGE EXTENSION

BASIC DATA

RPM	240	290	340
RAD/SEC	25.12	30.35	35.59
B_1	248.3	→	→
B_2	-.9129	→	→
B_3	-165.5	→	→
B_4	-.6134	→	→
B_5	-.3645	→	→
B_6	-.4665	→	→
B_7	-.007102	→	→
B_8	-1.288	→	→
B_9	-1.280	→	→
B_{10}	-7.256	→	→
B_{11}	-2.479	→	→
B_{12}	-3.172	→	→
B_{13}	-1.843	-1.526	-1.301
B_{14}	554.1	808.8	1112.
B_{15}	50.24	60.70	71.18
B_{16}	46.30	→	→
B_{17}	5.124	6.191	7.260
B_{18}	-128.7	-187.9	-258.4
B_{19}	-1.843	-1.526	-1.301
B_{20}	554.1	808.8	1112.
B_{21}	-50.24	-60.70	-71.18
B_{22}	-46.30	→	→

100% FUEL

RPM	240	290	340
RAD/SEC	25.12	30.35	35.59
B_{23}	128.7	187.9	258.4
B_{24}	5.124	6.191	7.260
B_{25}	-.01219	→	→
B_{26}	-1.010	→	→
B_{27}	-26.30	-31.78	-37.26
B_{28}	-9.465	-13.82	-19.00
B_{29}	50.24	60.70	71.18
B_{30}	660.7	964.5	1326.
B_{31}	11.47	13.92	16.38
B_{32}	-288.1	-422.5	-583.0
B_{33}	.02313	.02794	.03277
B_{34}	41.37	49.99	58.62
B_{35}	-26.30	-31.78	-37.26
B_{36}	-9.465	-13.82	-19.00
B_{37}	-50.24	-60.70	-71.18
B_{38}	-660.7	-964.5	-1326.
B_{39}	288.1	422.5	583.0
B_{40}	11.47	13.92	16.38
B_{41}	.1188	.1443	.1698
B_{42}	9.840	11.95	14.07
B_{43}	-3.295	-2.727	-2.326
B_{44}	-.02563	-.02121	-.01809

REV

COMPARISON OF MEASURED MODEL
TO CALCULATED WING DYNAMIC
CHARACTERISTICS

A scale model of the proposed wing for the H-25 subjected to a relative wind velocity of 85.0 knots in a wind tunnel, Reference 14, exhibited a resonant frequency of 8.65 cps and a damping ratio of 0.08. The model was scaled as follows

$$L_{Model} = \frac{1}{9} L_{Actual}$$

$$M_{Model} = \left(\frac{1}{9}\right)^2 M_{Actual}$$

where;

L is a representative length dimension

and

M is total mass of wing

The single degree of freedom system representing the wing, without external forces, is defined by the second order equation of motion

where;

α_w = rigid body flap motion of wing about skew hinge line

ω_n = natural frequency $= \left(\frac{K}{I}\right)^{\frac{1}{2}}$

ξ = damping ratio $= \frac{C}{2I\omega_n}$

K = wing aerodynamic spring

I = wing inertia about hinge

C = wing aerodynamic damping

A dimensional analysis is performed on the above parameters as follows:

1) Wing aerodynamic spring

$$K = \frac{1}{8}\rho a_\infty C_o^2 v^2 L^2 \left[-\frac{1}{L}\sin^2\gamma_o + \frac{2}{C_o}\cos\gamma_o \sin\gamma_o \right]$$

Ref: Page B-21

REV

therefore

$$K_{Actual} = \frac{1}{8} \rho a_\infty (9C_o)^2 V^2 (9L)^2 \left[- \frac{1}{(9L)} \sin^2\gamma_o + \frac{2}{(9C_o)} \cos\gamma_o \sin\gamma_o \right]$$

or

$$K_{Actual} = (9)^3 K_{Model}$$

2) Wing inertia about hinge

$$I = Mr^2 \qquad r = \text{radius of gyration}$$

thus

$$I_{Actual} = (9)^2 M(9r)^2 = (9)^4 I_{Model}$$

3) Natural frequency

$$\text{Actual} = \left[\frac{K_{Actual}}{I_{Actual}}\right]^{\frac{1}{2}} = \left[\frac{(9)^3 K_{Model}}{(9)^4 I_{Model}}\right]^{\frac{1}{2}}$$

or

$$\omega_n \text{ Actual} = \frac{1}{3} \omega_n \text{ Model}$$

4) Wing aerodynamic damping

$$C = \frac{1}{16} \rho a_\infty C_o^2 L^2 V \left[\cos\gamma_o \sin\gamma_o + \frac{8}{3}\left(\frac{L}{C_o}\right)\cos^2\gamma_o\right]$$

Ref: Page B-21

thus

$$C_{Actual} = \frac{1}{16} \rho a_\infty (9C_o)^2 (9L)^2 V \left[\cos\gamma_o \sin\gamma_o \; \frac{8}{3} \; \frac{(9L)}{(9C_o)} \cos^2\gamma_o\right]$$

or

$$C_{Actual} = (9)^4 C_{Model}$$

5) Damping ratio

$$\xi \text{ Actual} = \frac{C_{Actual}}{2 I_{Actual} \omega_n \text{ Actual}} = \frac{(9)^4 C_{Model}}{2(9)^4 I_{Model} \times \frac{1}{3}\omega_n \text{Model}}$$

or

$$\xi \text{ Actual} = 3 \; \xi \text{ Model}$$

REV

Thus, converting the Model characteristics,

Actual = 1/3 (8.65) = 2.9 cps

Actual = 3 (0.08) = 0.24

The above parameters calculated from data found in the appendices are,

$$I = \tfrac{1}{2}a_1, \qquad C = \tfrac{1}{2}a_6$$

From Page A-65; airspeed 80 knots, wings full:

$$a_1 = 37{,}992 \ \#\text{-sec}^2\text{-in}^2$$

$$a_6 = 54{,}412 \ \text{in-}\#/\frac{\text{rad}}{\text{sec}}$$

$$K = 384{,}400 \ \text{in-}\#/\text{rad}$$

$$W_n = \frac{(K)^{\frac{1}{2}}}{(\frac{1}{2}a_1)} = 0.72 \text{ cps}$$

$$\zeta = \frac{\frac{1}{2}a_6}{2(\frac{1}{2}a_1)} = 0.16$$

REV

APPENDIX B

5. AIR INSTABILITY CALCULATIONS

SIKORSKY H-34

REV

4 BLADE ROTOR

(a) BLADE FLAP

MULTIPLY THE β_K EQUATION THROUGH WITH $\sin\psi_K$ AND THEN $\cos\psi_K$ AND SUM OVER THE FOUR BLADES OF THE ROTOR:

$$I_\beta \sum_{K=1}^{4} \ddot{\beta}_K \sin\psi_K + (e_\beta \sigma_\beta + I_\beta)\Omega^2 \sum_{K=1}^{4} \beta_K \sin\psi_K = C_1 \dot{y} \sum_{K=1}^{4} \sin\psi_K \cos\psi_K + C_2 \dot{y} \sum_{K=1}^{4} \sin^2\psi_K +$$
$$+ C_3 \dot{\alpha} \sum_{K=1}^{4} \sin\psi_K \cos\psi_K + C_4 \dot{\alpha} \sum_{K=1}^{4} \sin^2\psi_K + C_5 \sum_{K=1}^{4} \dot{\beta}_K \sin\psi_K + C_6 \sum_{K=1}^{4} \dot{\xi}_K \sin\psi_K$$

$$I_\beta \sum_{K=1}^{4} \ddot{\beta}_K \cos\psi_K + (e_\beta \sigma_\beta + I_\beta)\Omega^2 \sum_{K=1}^{4} \beta_K \cos\psi_K = C_1 \dot{y} \sum_{K=1}^{4} \cos^2\psi_K + C_2 \dot{y} \sum_{K=1}^{4} \sin\psi_K \cos\psi_K +$$
$$+ C_3 \dot{\alpha} \sum_{K=1}^{4} \cos^2\psi_K + C_4 \dot{\alpha} \sum_{K=1}^{4} \sin\psi_K \cos\psi_K + C_5 \sum_{K=1}^{4} \dot{\beta}_K \cos\psi_K + C_6 \sum_{K=1}^{4} \dot{\xi}_K \cos\psi_K$$

$$\sum_{K=1}^{4} \sin^2\psi_K = \sin^2 0^\circ + \sin^2\tfrac{\pi}{2} + \sin^2\pi + \sin^2\tfrac{3}{2}\pi = 0 + 1^2 + 0 + (-1)^2 = 2$$
$$\sum_{K} \cos^2\psi_K = \cos^2 0^\circ + \cos^2\tfrac{\pi}{2} + \cos^2\pi + \cos^2\tfrac{3}{2}\pi = 1^2 + 0 + (-1)^2 + 0 = 2$$
$$\sum_{K} \sin\psi_K \cos\psi_K = \sin 0^\circ \cos 0^\circ + \sin\tfrac{\pi}{2}\cos\tfrac{\pi}{2} + \sin\pi\cos\pi + \sin\tfrac{3}{2}\pi\cos\tfrac{3}{2}\pi = 0$$

THE QUASI-NORMAL COORDINATES GIVE:

$$I_\beta(\ddot{\gamma}_\beta - \Omega^2\gamma_\beta - 2\Omega\dot{\delta}_\beta) + (e_\beta\sigma_\beta + I_\beta)\Omega^2\gamma_\beta = 2C_2\dot{y} + 2C_4\dot{\alpha} + C_5(\dot{\gamma}_\beta - \Omega\delta_\beta) + C_6(\dot{\gamma}_\xi - \Omega\delta_\xi)$$
$$I_\beta(\ddot{\delta}_\beta - \Omega^2\delta_\beta + 2\Omega\ddot{\gamma}_\beta) + (e_\beta\sigma_\beta + I_\beta)\Omega^2\delta_\beta = 2C_1\dot{y} + 2C_3\dot{\alpha} + C_5(\dot{\delta}_\beta + \Omega\gamma_\beta) + C_6(\dot{\delta}_\xi + \Omega\gamma_\xi)$$

AND:

$$\ddot{\gamma}_\beta = \frac{C_5}{I_\beta}\dot{\gamma}_\beta - \frac{e_\beta\sigma_\beta}{I_\beta}\Omega^2\gamma_\beta + 2\Omega\dot{\delta}_\beta - \frac{\Omega C_5}{I_\beta}\delta_\beta + \frac{C_6}{I_\beta}\dot{\gamma}_\xi - \frac{\Omega C_6}{I_\beta}\delta_\xi + 2\frac{C_2}{I_\beta}\dot{y} + 2\frac{C_4}{I_\beta}\dot{\alpha}$$
$$\ddot{\delta}_\beta = \frac{C_5}{I_\beta}\dot{\delta}_\beta - \frac{e_\beta\sigma_\beta}{I_\beta}\Omega^2\delta_\beta - 2\Omega\dot{\gamma}_\beta + \frac{\Omega C_5}{I_\beta}\gamma_\beta + \frac{\Omega C_6}{I_\beta}\gamma_\xi + \frac{C_6}{I_\beta}\dot{\delta}_\xi + 2\frac{C_1}{I_\beta}\dot{y} + 2\frac{C_3}{I_\beta}\dot{\alpha}$$

OR:

$$\ddot{\gamma}_\beta = B_{27}\dot{\gamma}_\beta + B_{28}\gamma_\beta + B_{29}\dot{\delta}_\beta + B_{30}\delta_\beta + B_{31}\dot{\gamma}_\xi + B_{32}\delta_\xi + B_{33}\dot{y} + B_{34}\dot{\alpha}$$

REV

$$\ddot{\delta}_\beta = B_{35}\dot{\delta}_\beta + B_{36}\delta_\beta + B_{37}\dot{\gamma}_\beta + B_{38}\gamma_\beta + B_{39}\gamma_\xi + B_{40}\dot{\delta}_\xi + B_{41}\dot{y} + B_{42}\dot{\alpha}$$

(b) BLADE LAG

AS ABOVE MULTIPLY THE ξ_K EQUATION THROUGH WITH $\sin\psi_K$ AND $\cos\psi_K$ AND SUM:

$$I_\xi \sum_1^4 \ddot{\xi}_K \sin\psi_K + C_{\xi K} \sum_1^4 \dot{\xi}_K \sin\psi_K + e_\xi \sigma_\xi \Omega^2 \sum_1^4 \xi_K \sin\psi_K - 2\Omega\beta_0 \left[I_\xi + \Delta e \sigma_\xi\right] \sum_1^4 \dot{\beta}_K \sin\psi_K =$$
$$= -\sigma_\xi \left(\ddot{y} + h_F \ddot{\alpha}\right) \sum_1^4 \sin\psi_K \cos\psi_K$$

$$I_\xi \sum_1^4 \ddot{\xi}_K \cos\psi_K + C_{\xi K} \sum_1^4 \dot{\xi}_K \cos\psi_K + e_\xi \sigma_\xi \Omega^2 \sum_1^4 \xi_K \cos\psi_K - 2\Omega\beta_0 \left[I_\xi + \Delta e \sigma_\xi\right] \sum_1^4 \dot{\beta}_K \cos\psi_K =$$
$$= -\sigma_\xi \left(\ddot{y} + h_F \ddot{\alpha}\right) \sum_1^4 \cos^2\psi_K$$

$$I_\xi \left(\ddot{\gamma}_\xi - \Omega^2 \gamma_\xi - 2\Omega \dot{\delta}_\xi\right) + C_{\xi K} \left(\dot{\gamma}_\xi - \Omega \delta_\xi\right) + e_\xi \sigma_\xi \Omega^2 \gamma_\xi - 2\Omega\beta_0 \left[I_\xi + \Delta e \sigma_\xi\right] \left(\dot{\gamma}_\beta - \Omega \delta_\beta\right) = 0$$

$$I_\xi \left(\ddot{\delta}_\xi - \Omega^2 \delta_\xi + 2\Omega \dot{\gamma}_\xi\right) + C_{\xi K} \left(\dot{\delta}_\xi + \Omega \delta_\xi\right) + e_\xi \sigma_\xi \Omega^2 \delta_\xi - 2\Omega\beta_0 \left[I_\xi + \Delta e \sigma_\xi\right] \left(\dot{\delta}_\beta + \Omega \gamma_\beta\right) = -2\sigma_\xi \left(\ddot{y} + h_F \ddot{\alpha}\right)$$

AND:

$$\ddot{\gamma}_\xi = -\frac{C_\xi}{I_\xi} \dot{\gamma}_\xi + \left(1 - \frac{e_\xi \sigma_\xi}{I_\xi}\right) \Omega^2 \gamma_\xi + 2\Omega \dot{\delta}_\xi + \frac{\Omega C_{\xi K}}{I_\xi} \delta_\xi + \frac{2\Omega\beta_0}{I_\xi} \left[I_\xi + \Delta e \sigma_\xi\right] \dot{\gamma}_\beta - \frac{2\Omega^2\beta_0}{I_\xi} \left[I_\xi + \Delta e \sigma_\xi\right] \delta_\beta$$

$$\ddot{\delta}_\xi = -\frac{C_\xi}{I_\xi} \dot{\delta}_\xi + \left(1 - \frac{e_\xi \sigma_\xi}{I_\xi}\right) \Omega^2 \delta_\xi - 2\Omega \dot{\gamma}_\xi - \frac{\Omega C_{\xi K}}{I_\xi} \gamma_\xi + \frac{2\Omega^2\beta_0}{I_\xi} \left[I_\xi + \Delta e \sigma_\xi\right] \gamma_\beta + \frac{2\Omega\beta_0}{I_\xi} \left[I_\xi + \Delta e \sigma_\xi\right] \dot{\gamma}_\beta$$
$$- 2\frac{\sigma_\xi}{I_\xi} \ddot{y} - 2\frac{\sigma_\xi}{I_\xi} h_F \ddot{\alpha}$$

OR

$$\ddot{\gamma}_\xi = B_{13} \dot{\gamma}_\xi + B_{14} \gamma_\xi + B_{15} \dot{\delta}_\xi + B_{16} \delta_\xi + B_{17} \dot{\gamma}_\beta + B_{18} \delta_\beta$$

$$\ddot{\delta}_\xi = B_{19} \dot{\delta}_\xi + B_{20} \delta_\xi + B_{21} \dot{\gamma}_\xi + B_{22} \gamma_\xi + B_{23} \gamma_\beta + B_{24} \dot{\delta}_\beta + B_{25} \ddot{y} + B_{26} \ddot{\alpha}$$

REV

REV

NUMERICAL DATA H-34 HELICOPTER

SYMBOL	DIMENSION	DESCRIPTION	WITHOUT WINGS	0% FUEL	100% FUEL
ρ	LBS-SEC^2/IN^4	AIR MASS DENSITY	$.1147 \times 10^{-5}$	→	→
a_∞	–	SLOPE OF AIRFOIL LIFT CURVE	5.75	→	→
c_0	IN	CHORD OF ROTOR BLADE	16.4	→	→
Ω	RAD/SEC	ROTOR SPEED	–	–	–
r_β	IN	SPANWISE COORDINATE ALONG THE BLADE	–	–	–
θ_0	RAD	COLLECTIVE PITCH ANGLE	.2487	→	→
e_β	IN	FLAP HINGE OFFSET	12	→	→
I_β	LBS-SEC^2-IN	BLADE FLAP INERTIA	13553.	→	→
β_0	RAD	CONSTANT FLAP ANGLE	.08412	→	→
r_0	IN	RADIAL ARM OF BLADE DAMPER	6	→	→
ζ_0	RAD	SINGLE AMPLITUDE OF BLADE LAG MOTION	.08727	→	→
e_ζ	IN	LAG HINGE OFFSET ($= e_\beta$)	12	→	→
$\overline{\sigma_\zeta}$	LBS-SEC^2	BLADE LAG MOMENT ($= \overline{\sigma_\beta}$)	63.473	→	→
I_ζ	LBS-SEC^2-IN	BLADE LAG INERTIA	13553.	→	→
P	LBS	PRELOAD OF ROTOR BLADE LAG DAMPER	1650.	→	→
C	LBS / $\frac{IN}{SEC}$	VISCOUS PORTION OF BLADE LAG DAMPER	0	→	→
T	LBS	THRUST	9300	11300	13300
h_a	IN	ROTOR VERTICAL DISTANCE CG TO HUB	80	89	111.6
Δe	IN	$e_\zeta - e_\beta$	0	→	→
v	IN/SEC	INDUCED VELOCITY* $= T/2\rho A_e V \cos\alpha_R$	476.5	→	→
M_{22}	LBS-SEC^2-IN	$= I_a$ = ROLL INERTIA OF AIRCRAFT ABOUT CG - TOTAL	48950	420400	2887150
M_{11}	LBS-SEC^2/IN	MASS OF AIRCRAFT INCLUDING WINGS AND BLADES = M	24.10	29.3	65.5
M_{33}		$= 2\sum m_i r_i^2 \cos^2\psi_0$	0	90855	726850
M_{23}		$= 2\sum m_i (\varepsilon_4 + r_i) r_i \cos\psi_0$	0	$.1760 \times 10^6$	1.407×10^6
C_{22}		$= 2\sum C_{r_i}(r_i+\varepsilon_4)^2 = 2\int_0^L \left(\frac{1}{2}\rho a_{\infty} c_0 v\right)(r_i+\varepsilon_4)^2 dr_i = \frac{2}{3}C_{r_i}\left[(L+\varepsilon_4)^3 - \varepsilon_4^3\right]$	0	3.16×10^6	3.16×10^6
C_{23}		$= 2\sum C_{r_i}(r_i+\varepsilon_4) r_i \cos\psi_0 = 2\int_0^L C_{r_i}(r_i+\varepsilon_4) r_i \cos\psi_0 \, dr_i = 2C_{r_i}L^2\left[\frac{L}{3} + \frac{\varepsilon_4}{2}\right]\cos\psi_0$	0	1.591×10^6	1.591×10^6
K_{33}		$= 2 h_3^2 K_{\beta y w} \cos^2\psi_0 + 2\varepsilon_1^2 K_{\zeta z w} + 2 K_{\alpha w}$	0	$.618 \times 10^6$	6.18×10^6
C_{33}		$= 2C_{\alpha w} + 2\sum C_{r_i} r_i^2 \cos^2\psi_0 = 2C_{\alpha w} + 2\int_0^L C_{r_i} r_i^2 \cos^2\psi_0 \, dr_i = 2C_{\alpha w} + 2C_{r_i}\frac{L^3}{3}\cos^2\psi_0$	0	$.821 \times 10^6$	$.821 \times 10^6$

THE ORIGINAL PAGE IS OF POOR QUALITY. REPRODUCED FROM COPY FURNISHED ASTIA

PREPARED BY:
CHECKED BY:
DATE: June 1960

VERTOL AIRCRAFT CORPORATION

PAGE NO. B-57
REPORT NO. R-197
MODEL NO. H-34

BLADE PARAMETERS

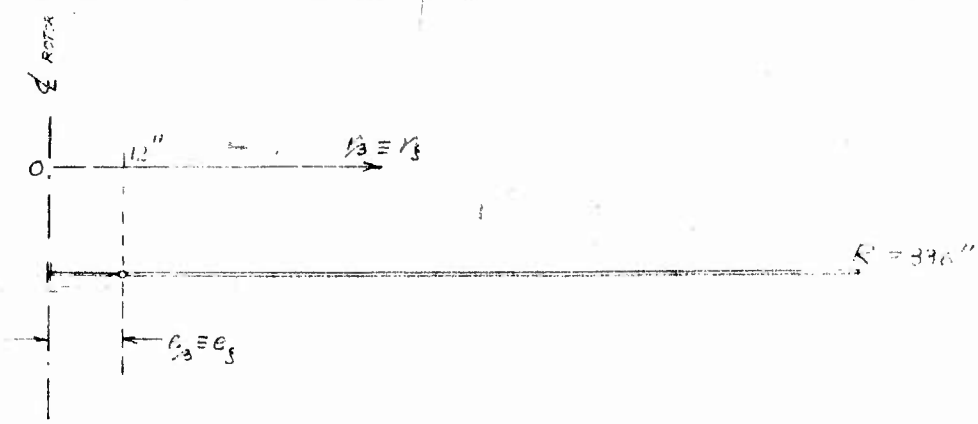

1) $$\int_{12}^{336} r_3 (e_3 + r_3)\, dr_3 = \left[\frac{e_3 r_3^2}{2} + \frac{r_3^3}{3} \right]_{12}^{336} = 13.32 \times 10^6$$

2) $$\int_{12}^{336} r_3\, dr_3 = \left. \frac{r_3^2}{2} \right|_{12}^{336} = .05645 \times 10^6$$

3) $$\int_{12}^{336} r_3 (e_3 + r_3)^2 dr_3 = \left[\frac{e_3^2 r_3^2}{2} + 2 e_3 \frac{r_3^3}{3} + \frac{r_3^4}{4} \right]_{12}^{336} = 34.98 \times 10^6$$

4) $$\int_{12}^{336} r_3^2 (e_3 + r_3)\, dr_3 = \left[e_3 \frac{r_3^3}{3} + \frac{r_3^4}{4} \right]_{12}^{336} = 3338. \times 10^6$$

5) $$\int_{12}^{336} r_3^2\, dr_3 = \left. \frac{r_3^3}{3} \right|_{12}^{336} = 12.64 \times 10^6$$

REV

$$C_1 = \left[\tfrac{1}{2}\rho a_\infty c_0\right] 2\Omega\,\theta_0 \int r_\beta (e_\beta + r_\beta)\, dr_\beta - \left[\tfrac{1}{2}\rho a_\infty c_0\right] v \int r_\beta\, dr_\beta$$

$$C_2 = \left[\tfrac{1}{2}\rho a_\infty c_0\right] \Omega\,\beta_0 \int r_\beta (e_\beta + r_\beta)\, dr_\beta$$

$$C_3 = C_1 h_e$$

$$C_4 = C_2 h_e + \left[\tfrac{1}{2}\rho a_\infty c_0\right] \Omega \int r_\beta (e_\beta + r_\beta)^2\, dr_\beta$$

$$C_5 = -\left[\tfrac{1}{2}\rho a_\infty c_0\right] \Omega \int r_\beta^2 (e_\beta + r_\beta)\, dr_\beta$$

$$C_6 = \left[\tfrac{1}{2}\rho a_\infty c_0\right] 2\Omega\,\theta_0 \int r_\beta (e_\beta + r_\beta)(r_\beta - \Delta e)\, dr_\beta - \left[\tfrac{1}{2}\rho a_\infty c_0\right] v \int r_\beta (r_\beta - \Delta e)\, dr_\beta$$

NUMERICAL VALUES

$$\left[\tfrac{1}{2}\rho a_\infty c_0\right] = \tfrac{1}{2}\left(.1147\times10^{-6}\right)(5.75)(16.4) = 5.408\times10^{-6}$$

$$C_1 = \left(5.408\times10^{-6}\right)(2\Omega)(.2487)\left(13.32\times10^{6}\right) - \left(5.408\times10^{-6}\right)(476.5)\left(.05645\times10^{6}\right)$$

$$C_2 = \left(5.408\times10^{-6}\right)(\Omega)(.08412)\left(13.32\times10^{6}\right)$$

$$C_3 = C_1 h_e$$

$$C_4 = C_2 h_e + \left(5.408\times10^{-6}\right)(\Omega)\left(3498.\times10^{6}\right)$$

$$C_5 = -\left(5.408\times10^{-6}\right)(\Omega)\left(3338.\times10^{6}\right)$$

$$C_6 = \left(5.408\times10^{-6}\right)(2\Omega)(.2487)\left(3338.\times10^{6}\right) - \left(5.408\times10^{-6}\right)(476.5)\left(12.64\times10^{6}\right)$$

C	WITHOUT WINGS $h_e = 80.$	0% FUEL INTO WINGS $h_e = 89.$	100% FUEL INTO WINGS $h_e = 111.6$
$C_1 = 35.83\Omega - 145.5$	→	→	→
$C_2 = 6.060\,\Omega$	→	→	→
$C_3 = (35.83\Omega - 145.5)\,h_e$	$2866\Omega - 11640$	$31.89\Omega - 12950$	$3999\Omega - 16240$
$C_4 = (6.060\,h_e + 18920)\Omega$	$19400\,\Omega$	$19460\,\Omega$	$19600\,\Omega$
$C_5 = -18050.\,\Omega$	→	→	→
$C_6 = 9010\Omega - 32570$	→	→	→

REV

4 BLADES, 1 ROTOR

B	EXPRESSION	WITHOUT WINGS	0% FUEL	100% FUEL
B_1	T/M_{11}	$386 = g$	386	203.1
B_2	$-\sigma_s/M_{11}$	-2.634	-2.167	-.9690
B_3	$-\frac{1}{2} B_1$	-193.0	-193.0	-101.6
B_4	$-C_{22}/M_{22}$	0	-7.517	-1.095
B_5	$-M_{23}/M_{22}$	0	-.4186	-.4873
B_6	$-C_{23}/M_{22}$	0	-3.784	-.5511
B_7	$-\frac{h_e}{M_{22}}\sigma_s$	-.1037	-.01344	-.002453
B_8	$-\frac{1}{2}\frac{T h_e}{M_{22}}$	-7.635	-1.196	.2570
B_9	$-C_{33}/M_{33}$	0	-9.036	-1.130
B_{10}	$-K_{33}/M_{33}$	0	-68.02	-8.502
B_{11}	$-M_{23}/M_{33}$	0	-1.937	-1.936
B_{12}	$-C_{23}/M_{33}$	0	-17.51	-2.189
B_{13}	$-\frac{r_o^2}{I_s}\left[\frac{4P}{\pi r_o f_o \Omega}\sqrt{\frac{I_s}{e_s \sigma_s}} + c\right]$	$-\frac{44.95}{\Omega}$	→	
B_{14}	$\Omega^2\left[1 - \frac{e_s \sigma_s}{I_s}\right]$	$.9438\,\Omega^2$	→	
B_{15}	2Ω	2Ω	→	
B_{16}	$-B_{13}\Omega$	44.95	→	
B_{17}	$2\left(\frac{\Delta_e \sigma_s + I_s}{I_s}\right)/\beta_o \Omega$	$.1682\,\Omega$	→	
B_{18}	$-B_{17}\Omega$	$-.1682\,\Omega^2$	→	
B_{19}	B_{13}	$-\frac{44.95}{\Omega}$	→	
B_{20}	B_{14}	$.9438\,\Omega^2$	→	
B_{21}	$-B_{15}$	-2Ω	→	

REV

4 BLADES, 1 ROTOR

B	EXPRESSION	WITHOUT WINGS	0% FUEL	100% FUEL
B_1	T/M_{11}	$386 = g$	386	203.1
B_2	$-\sigma_s/M_{11}$	-2.634	-2.167	$-.9690$
B_3	$-\frac{1}{2} B_1$	-193.0	-193.0	-101.6
B_4	$-C_{22}/M_{22}$	0	-7.517	-1.095
B_5	$-M_{23}/M_{22}$	0	$-.4186$	$-.4873$
B_6	$-C_{23}/M_{22}$	0	-3.784	$-.5511$
B_7	$-\frac{h_e}{M_{22}}\sigma_s$	$-.1037$	$-.01344$	$-.002453$
B_8	$-\frac{1}{2}\frac{T h_e}{M_{22}}$	-7.635	-1.196	.2570
B_9	$-C_{33}/M_{33}$	0	-9.036	-1.139
B_{10}	$-K_{33}/M_{33}$	0	-68.02	-8.502
B_{11}	$-M_{23}/M_{33}$	0	-1.937	-1.936
B_{12}	$-C_{23}/M_{33}$	0	-17.51	-2.189
B_{13}	$-\frac{\sigma_s^2}{I_s}\left[\frac{4P}{\pi\sigma_s\beta_0\Omega}\sqrt{\frac{I_s}{e_s\sigma_s}}+c\right]$	$-\frac{44.95}{\Omega}$	→	
B_{14}	$\Omega^2\left[1-\frac{e_s\sigma_s}{I_s}\right]$	$.9438\,\Omega^2$	→	
B_{15}	2Ω	2Ω	→	
B_{16}	$-B_{13}\Omega$	44.95	→	
B_{17}	$2\left(\frac{\Delta e\,\sigma_s + I_s}{I_s}\right)/\beta_0\Omega$	$.1682\,\Omega$	→	
B_{18}	$-B_{17}\Omega$	$-.1682\,\Omega^2$	→	
B_{19}	B_{13}	$-\frac{44.95}{\Omega}$	→	
B_{20}	B_{14}	$.9438\,\Omega^2$	→	
B_{21}	$-B_{15}$	-2Ω	→	

REV

CONT'D.

B_{22}	$B_{13}\,\Omega$	-44.95		
B_{23}	$B_{17}\,\Omega$	$.1682\,\Omega^2$		
B_{24}	B_{17}	$.1682\,\Omega$		
B_{25}	$-2\,\frac{\sigma_5}{I_5}$	$-.009367$		
B_{26}	B_{25} [illegible]	$-.7494$	$-.8337$	-1.045
B_{27}	[illegible]$_5 / I_5$	$-1.331\,\Omega$		
B_{28}	$\frac{e_{05}\,\sigma_5}{I_5}\,\Omega^2$	$-.05619\,\Omega^2$		
B_{29}	B_{15}	$2\,\Omega$		
B_{30}	$-B_{27}\,\Omega$	$1.331\,\Omega^2$		
B_{31}	[illegible]	$.6648\,\Omega - 2.403$		
B_{32}	$-B_{31}\,\Omega$	$-.6648\,\Omega^2 + 2.403\,\Omega$		
B_{33}	$2\,\frac{c_4}{I_3}$	$.0008942\,\Omega$		
[illegible]	$\frac{[illegible]}{I_3}$	$2.863\,\Omega$	$2.872\,\Omega$	$2.892\,\Omega$
B_{35}	B_{27}	$-1.331\,\Omega$		
[illegible]	[illegible]	$-.05619\,\Omega$		
B_{37}	$-B_{15}$	$-2\,\Omega$		
B_{38}	$B_{27}\,\Omega$	$-1.331\,\Omega^2$		
B_{39}	[illegible]	[illegible]		
B_{40}	B_{31}	$.6648\,\Omega - 2.403$		
B_{41}	$2\,c_1 / I_3$	$.005287\,\Omega - .02147$		
B_{42}	$2\,c_3 / I_3$	$.4229\,\Omega - 1.718$	$.4706\,\Omega - 1.911$	$.5901\,\Omega - 2.397$
B_{43}	$-\frac{1}{4\Omega}\,B_1$	$-\frac{96.5}{\Omega}$	$-\frac{96.5}{\Omega}$	$-\frac{50.78}{\Omega}$
B_{44}	$\frac{1}{2\Omega}\,B_8$	$\frac{3.818}{\Omega}$	$-\frac{.5980}{\Omega}$	$-\frac{.1285}{\Omega}$

REV

THE ORIGINAL PAGE IS OF POOR QUALITY. BEST AVAILABLE COPY FROM COPY FURNISHED AGENCY

MECHANICAL INSTABILITY ANALYSIS

H-34 HELICOPTER RANGE EXTENSION

WITHOUT WINGS

BASIC DATA

Ω =	170 RPM	220 RPM	270 RPM
Ω =	17.79 RAD/SEC	23.03 RAD/SEC	28.26 RAD/SEC
B_1	386.0	→	→
B_2	-2.634	→	→
B_3	-193.0	→	→
B_4	0	→	→
B_5	0	→	→
B_6	0	→	→
B_7	-.1037	→	→
B_8	-7.635	→	→
B_9	0	→	→
B_{10}	0	→	→
B_{11}	0	→	→
B_{12}	0	→	→
B_{13}	-2.527	-1.952	-1.591
B_{14}	298.7	500.6	753.7
B_{15}	35.58	46.06	56.52
B_{16}	44.95	→	→
B_{17}	2.992	3.874	4.753
B_{18}	-53.22	-89.18	-134.3
B_{19}	-2.527	-1.952	-1.591
B_{20}	298.7	500.6	753.7
B_{21}	-35.58	-46.06	-56.52
B_{22}	44.95	→	→

Ω =	170 RPM	220 RPM	270 RPM
Ω =	17.79 RAD/SEC	23.03 RAD/SEC	28.26 RAD/SEC
B_{23}	53.22	89.18	134.3
B_{24}	2.992	3.874	4.753
B_{25}	-.009367	→	→
B_{26}	-.7494	→	→
B_{27}	-23.67	-30.65	-37.61
B_{28}	-17.78	-29.80	-44.88
B_{29}	35.58	46.06	56.52
B_{30}	421.1	705.9	1063.
B_{31}	9.424	12.91	16.35
B_{32}	-167.7	-297.3	-462.1
B_{33}	.01591	.02059	.02527
B_{34}	50.93	65.93	80.91
B_{35}	-23.67	-30.65	-37.61
B_{36}	-17.78	-29.80	-44.88
B_{37}	-35.58	-46.06	-56.52
B_{38}	-421.1	-705.9	-1063
B_{39}	167.7	297.3	531.0
B_{40}	9.424	12.91	16.35
B_{41}	.07259	.1003	.1279
B_{42}	5.805	8.021	10.23
B_{43}	-5.424	-4.190	-3.415
B_{44}	-.2146	-.16.58	-.1351

REV

MECHANICAL INSTABILITY ANALYSIS

H-34 HELICOPTER RANGE EXTENSION

.0% FUEL IN WINGS

BASIC DATA

Ω =	170 RPM	220 RPM	270 RPM
Ω =	17.79 RAD/SEC	23.03 RAD/SEC	28.26 RAD/SEC
B_1	386.0	→	→
B_2	-2.167	→	→
B_3	-193.0	→	→
B_4	-7.517	→	→
B_5	-.4186	→	→
B_6	-3.784	→	→
B_7	-.01344	→	→
B_8	-1.196	→	→
B_9	-9.036	→	→
B_{10}	-68.02	→	→
B_{11}	-1.937	→	→
B_{12}	-17.51	→	→
B_{13}	-2.527	-1.952	-1.591
B_{14}	298.7	500.6	753.7
B_{15}	35.58	46.06	56.52
B_{16}	44.95	→	→
B_{17}	2.992	3.874	4.753
B_{18}	-53.22	-89.18	-134.3
B_{19}	-2.527	-1.952	-1.591
B_{20}	298.7	500.6	753.7
B_{21}	-35.58	-46.06	-56.52
B_{22}	-44.95	→	→

Ω =	170 RPM	220 RPM	270 RPM
Ω =	17.79 RAD/SEC	23.03 RAD/SEC	28.26 RAD/SEC
B_{23}	53.22	89.18	134.3
B_{24}	2.992	3.874	4.753
B_{25}	-.009367	→	→
B_{26}	-.8337	→	→
B_{27}	-23.67	-30.65	-37.61
B_{28}	-17.78	-29.80	-44.88
B_{29}	35.58	46.06	56.52
B_{30}	421.1	705.9	106[illegible]
B_{31}	9.424	12.91	[illegible]7
B_{32}	-167.7	-297.3	-53[illegible]
B_{33}	.01591	.02059	.0252[illegible]
B_{34}	51.09	66.14	81.1[illegible]
B_{35}	-23.67	-30.65	-37.6[illegible]
B_{36}	-17.78	-29.80	-44.88
B_{37}	-35.58	-46.06	-56.52
B_{38}	-421.1	-705.9	-1063.
B_{39}	167.7	297.3	531.0
B_{40}	9.424	12.91	18.79
B_{41}	.07259	.1003	.1279
B_{42}	6.461	8.927	11.39
B_{43}	-5.424	-4.190	-3.415
B_{44}	-.03361	-.02596	-.02116

THE OFFICIAL QUALITY PRODUCTION FROM COPY FOR

REV

MECHANICAL INSTABILITY ANALYSIS

H-34 HELICOPTER RANGE EXTENSION

100% FUEL IN WINGS

BASIC DATA

Ω =	170 RPM	220 RPM	270 RPM
Ω =	17.79 RAD/SEC	23.03 RAD/SEC	28.26 RAD/SEC
B_1	203.1	→	→
B_2	-.9690	→	→
B_3	-101.6	→	→
B_4	-1.095	→	→
B_5	-.4873	→	→
B_6	-.5511	→	→
B_7	-.002453	→	→
B_8	-.5141	→	→
B_9	-1.130	→	→
B_{10}	-8.502	→	→
B_{11}	-1.936	→	→
B_{12}	-2.189	→	→
B_{13}	-2.527	-1.952	-1.591
B_{14}	298.7	500.6	753.7
B_{15}	35.58	46.06	56.52
B_{16}	44.95	→	→
B_{17}	2.992	3.874	4.753
B_{18}	-53.22	-89.18	-134.3
B_{19}	-2.547	-1.952	-1.591
B_{20}	298.7	500.6	753.7
B_{21}	-35.58	-46.06	-56.52
B_{22}	-44.95	→	→

Ω =	170 RPM	220 RPM	270 RPM
Ω =	17.79 RAD/SEC	23.03 RAD/SEC	28.26 RAD/SEC
B_{23}	53.22	89.18	134.3
B_{24}	2.992	3.874	4.753
B_{25}	-.009367	→	→
B_{26}	-1.045	→	→
B_{27}	-23.67	-30.65	-37.61
B_{28}	-17.78	-29.80	-44.88
B_{29}	35.58	46.06	56.52
B_{30}	421.1	705.9	1063.
B_{31}	9.424	12.91	18.79
B_{32}	-167.7	-297.3	-531.0
B_{33}	.01591	.02059	.02527
B_{34}	51.45	66.60	81.72
B_{35}	-23.67	-30.65	-37.61
B_{36}	-17.78	-29.80	-44.88
B_{37}	-35.58	-46.06	-56.52
B_{38}	-421.1	-705.9	-1063.
B_{39}	167.7	297.3	531.0
B_{40}	9.424	12.91	18.79
B_{41}	.07259	.1003	.1279
B_{42}	8.100	11.19	14.28
B_{43}	-2.854	-2.205	-1.797
B_{44}	-.007225	-.005585	-.004549

REV

VERTOL DIVISION
BOEING

BOEING-VERTOL Letter No. 61 2631

Date: May 25, 1961

To: Research Contracting Officer
U. S. Army Transportation Research Command
Transportation Corps
Fort Eustis, Virginia

Subject: Contract DA-44-177-TC-550 - Distribution of Abstract Pages for Volume I, TREC 60-64 and Volume II, TREC 60-65

Enclosure: (1) Thirty (30) Copies of Abstract Page for Volume I, TREC 60-64
(2) Thirty (30) Copies of Abstract Page for Volume II, TREC 60-65
(3) Distribution List to Which Subject Reports Were Forwarded

Vertol Division, The Boeing Company, submitted to TRECOM and designated addressees, Reports, Volume I - TREC 60-64 and Volume II - TREC 60-65 entitled "Wind Tunnel Test and Further Analysis of Floating Wing Fuel Tanks for Helicopter Range Extension".

Submitted are the abstract pages for TREC 60-64, Enclosure (1), and TREC 60-65, Enclosure (2), in accordance with U. S. Army Transportation Research Circular 715-10, "Guide for the Preparation of Contractual Reports".

In addition, copies of the abstract pages for TREC 60-64 and TREC 60-65 are hereby distributed to the addressees listed in Enclosure (3).

VERTOL DIVISION
THE BOEING COMPANY

Robert E. Tingley
Robert E. Tingley
Chief, Aircraft Contracts

/mab

MAY 29 196
TIPDR

MORTON, PENNSYLVANIA · PHONE-KINGSWOOD 3-4000 · CABLE-VERTOL

AD 248517

VERTOL DIVISION, BOEING AIRPLANE COMPANY, Morton, Pennsylvania.

WIND TUNNEL TESTS AND FURTHER ANALYSIS OF THE FLOATING WING FUEL TANKS FOR HELICOPTER RANGE EXTENSION.

Volume 2-Ground and Air Mechanical Instability Analysis, by V. Capurso, R. Ricks, R. Gabel. October 1960, 206 p. incl. figs. and app. (TREC 60-65) (Contract No. DA 44-177-TC-550)

Unclassified Report

Mechanical instability of a helicopter range extension system utilizing hinged wing fuel tanks has been investigated for acceptable characteristics on ground and in the air. Ground instability is studied for the H-21, H-25, and H-34 helicopters with wing tanks through a simulated takeoff with full tanks to a landing with empty tanks. Instability ranges appear due to antisymmetric blade lag motions coupling with aircraft roll and lateral motions and wing flap and bending modes. Critical conditions are in the roll mode in takeoff with full tanks and in landing with empty tanks, (Over)

UNCLASSIFIED

1. Range Extension - Dynamics
2. Helicopter Mechanical Instability

I. Capurso, V.
II. Ricks, R.
III. Gabel, R.

UNCLASSIFIED

but damping from the helicopter and wing oleo struts is always sufficient to control the instability.

In-flight mechanical instability is also shown to be possible. It results from antisymmetric blade lag motion coupling with aircraft roll and lateral oscillations at a reference natural frequency provided by rotor thrust and wing aerodynamic spring effects. Blade flap-lag Coriolis coupling is also included and tends to accentuate the unstable conditions. The winged configurations of the H-21, H-25, and H-34 helicopters are marginally stable at normal rotor speed based on calculated wing aerodynamic damping estimates. Wing damping obtained from wind tunnel model tests is larger than the calculated damping, however, so that the winged configurations should be satisfactory under all conditions. A build-up ground and flight test program, similar to that performed on new model helicopters is recommended, however, to insure that no dangerous instability exists.

UNCLASSIFIED

VERTOL DIVISION, BOEING AIRPLANE COMPANY, Morton, Pennsylvania.

WIND TUNNEL TESTS AND FURTHER ANALYSIS OF THE FLOATING WING FUEL TANKS FOR HELICOPTER RANGE EXTENSION.

Volume 2-Ground and Air Mechanical Instability Analysis, by V. Capurso, R. Ricks, R. Gabel. October 1960, 206 p. incl. figs. and app. (TREC 60-65) (Contract No. DA 44-177-TC-550)

Unclassified Report

Mechanical instability of a helicopter range extension system utilizing hinged wing fuel tanks has been investigated for acceptable characteristics on ground and in the air. Ground instability is studied for the H-21, H-25, and H-34 helicopters with wing tanks through a simulated takeoff with full tanks to a landing with empty tanks. Instability ranges appear due to antisymmetric blade lag motions coupling with aircraft roll and lateral motions and wing flap and bending modes. Critical conditions are in the roll mode in takeoff with full tanks and in landing with empty tanks, (Over)

UNCLASSIFIED

1. Range Extension - Dynamics
2. Helicopter Mechanical Instability

I. Capurso, V.
II. Ricks, R.
III. Gabel, R.

UNCLASSIFIED

but damping from the helicopter and wing oleo struts is always sufficient to control the instability.

In-flight mechanical instability is also shown to be possible. It results from antisymmetric blade lag motion coupling with aircraft roll and lateral oscillations at a reference natural frequency provided by rotor thrust and wing aerodynamic spring effects. Blade flap-lag Coriolis coupling is also included and tends to accentuate the unstable conditions. The winged configurations of the H-21, H-25, and H-34 helicopters are marginally stable at normal rotor speed based on calculated wing aerodynamic damping estimates. Wing damping obtained from wind tunnel model tests is larger than the calculated damping, however, so that the winged configurations should be satisfactory under all conditions. A build-up ground and flight test program, similar to that performed on new model helicopters is recommended, however, to insure that no dangerous instability exists.

UNCLASSIFIED

VERTOL DIVISION, BOEING AIRPLANE COMPANY, Morton, Pennsylvania.

WIND TUNNEL TESTS AND FURTHER ANALYSIS OF THE FLOATING WING FUEL TANKS FOR HELICOPTER RANGE EXTENSION.

Volume 2-Ground and Air Mechanical Instability Analysis, by V. Capurso, R. Ricks, R. Gabel. October 1960, 206 p. incl. figs. and app. (TREC 60-65) (Contract No. DA 44-177-TC-550)

Unclassified Report

Mechanical instability of a helicopter range extension system utilizing hinged wing fuel tanks has been investigated for acceptable characteristics on ground and in the air. Ground instability is studied for the H-21, H-25, and H-34 helicopters with wing tanks through a simulated takeoff with full tanks to a landing with empty tanks. Instability ranges appear due to antisymmetric blade lag motions coupling with aircraft roll and lateral motions, and wing flap and bending modes. Critical conditions are in the roll mode in takeoff with full tanks and in landing with empty tanks. (Over)

UNCLASSIFIED

1. Range Extension - Dynamics
2. Helicopter Mechanical Instability

I. Capurso, V.
II. Ricks, R.
III. Gabel, R.

UNCLASSIFIED

but damping from the helicopter and wing oleo struts is always sufficient to control the instability.

In-flight mechanical instability is also shown to be possible. It results from antisymmetric blade lag motion coupling with aircraft roll and lateral oscillations at a reference natural frequency provided by rotor thrust and wing aerodynamic spring effects. Blade flap-lag Coriolis coupling is also included and tends to accentuate the unstable conditions. The winged configurations of the H-21, H-25, and H-34 helicopters are marginally stable at normal rotor speed based on calculated wing aerodynamic damping estimates. Wing damping obtained from wind tunnel model tests is larger than the calculated damping, however, so that the winged configurations should be satisfactory under all conditions. A build-up ground and flight test program, similar to that performed on new model helicopters is recommended, however, to insure that no dangerous instability exists.

UNCLASSIFIED

VERTOL DIVISION, BOEING AIRPLANE COMPANY, Morton, Pennsylvania.

WIND TUNNEL TESTS AND FURTHER ANALYSIS OF THE FLOATING WING FUEL TANKS FOR HELICOPTER RANGE EXTENSION.

Volume 2-Ground and Air Mechanical Instability Analysis, by V. Capurso, R. Ricks, R. Gabel. October 1960, 206 p. incl. figs. and app. (TREC 60-65) (Contract No. DA 44-177-TC-550)

Unclassified Report

Mechanical instability of a helicopter range extension system utilizing hinged wing fuel tanks has been investigated for acceptable characteristics on ground and in the air. Ground instability is studied for the H-21, H-25, and H-34 helicopters with wing tanks through a simulated takeoff with full tanks to a landing with empty tanks. Instability ranges appear due to antisymmetric blade lag motions coupling with aircraft roll and lateral motions and wing flap and bending modes. Critical conditions are in the roll mode in takeoff with full tanks and in landing with empty tanks. (Over)

UNCLASSIFIED

1. Range Extension - Dynamics
2. Helicopter Mechanical Instability

I. Capurso, V.
II. Ricks, R.
III. Gabel, R.

UNCLASSIFIED

but damping from the helicopter and wing oleo struts is always sufficient to control the instability.

In-flight mechanical instability is also shown to be possible. It results from antisymmetric blade lag motion coupling with aircraft roll and lateral oscillations at a reference natural frequency provided by rotor thrust and wing aerodynamic spring effects. Blade flap-lag Coriolis coupling is also included and tends to accentuate the unstable conditions. The winged configurations of the H-21, H-25, and H-34 helicopters are marginally stable at normal rotor speed based on calculated wing aerodynamic damping estimates. Wing damping obtained from wind tunnel model tests is larger than the calculated damping, however, so that the winged configurations should be satisfactory under all conditions. A build-up ground and flight test program, similar to that performed on new model helicopters is recommended, however, to insure that no dangerous instability exists.

UNCLASSIFIED

UNCLASSIFIED

UNCLASSIFIED