UNCLASSIFIED

AD NUMBER
AD230007
NEW LIMITATION CHANGE
TO Approved for public release, distribution unlimited
FROM Distribution authorized to U.S. Gov't. agencies and their contractors; Administrative/Operational Use; 12 NOV 1959. Other requests shall be referred to U.S. Naval Research Lab., Washington, DC.
AUTHORITY
NRL ltr, 27 Feb 2006

THIS PAGE IS UNCLASSIFIED

This information is furnished upon the condition that it will not be released to another nation without specific authority of the Department of Defense of the United States, that it will be used for governmental purposes only, that individual or corporate rights originating in the information, whether patented or not, will be respected, and that the information be provided substantially the same degree of protection afforded it by the Department of Defense of the United States.

UNCLASSIFIED

ASTIA

FOR
MICRO-CARD
CONTROL ONLY

Reproduced by

Armed Services Technical Information Agency

ARLINGTON HALL STATION; ARLINGTON 12 VIRGINIA

UNCLASSIFIED

NOTICE: When government or other drawings, specifications or other data are used for any purpose other than in connection with a definitely related government procurement operation, the U. S. Government thereby incurs no responsibility, nor any obligation whatsoever; and the fact that the Government may have formulated, furnished, or in any way supplied the said drawings, specifications, or other data is not to be regarded by implication or otherwise as in any manner licensing the holder or any other person or corporation, or conveying any rights or permission to manufacture, use or sell any patented invention that may in any way be related thereto.

Best
Available
Copy

AD No. 230 007
ASTIA FILE COPY

(14)

NRL Report 5386

SHOCK SPECTRA AND DESIGN SHOCK SPECTRA

G. J. O'Hara

Structures Branch
Mechanics Division

November 12, 1959

FILE COPY

Return to
ASTIA
ARLINGTON HALL STATION
ARLINGTON 12, VIRGINIA
Attn: TISSS

ASTIA
DEC 21 1959
TIPDR

U. S. NAVAL RESEARCH LABORATORY
Washington, D.C.

CONTENTS

Abstract	ii
Problem Status	ii
Authorization	ii
INTRODUCTION	1
Historical Background	1
Shock Spectrum Definition	1
Combination of Shock Spectra	1
Purpose of the Examples	2
EXAMPLE I	2
EXAMPLE II	6
EXAMPLE III	13
CONCLUDING REMARKS	14
REFERENCES	15

ABSTRACT

For some time workers in the field of mechanical shock have been plagued with difficulties when combining sets of shock spectra to obtain curves which might be used for design purposes. The reason for this trouble is the present practice of using all points on all the available shock spectra when making a combinatorial analysis. A few simple examples have been worked out which show that such an approach cannot yield the proper design spectrum curve. These examples demonstrate that, because of interactions with nonrigid foundations, the values of interest in a shock spectrum tend to lie in the valleys of the plot rather than upon the peaks, even when the natural frequency of the foundation coincides with a natural frequency of the system as a whole. Thus an analysis based on the envelope of a set of spectra is not valid, since the high values determine the envelope.

PROBLEM STATUS

This is an interim report on one phase of the problem; work is continuing.

AUTHORIZATION

NRL Problem F02-05
Project S-F009-006-57R, Subtask 2

Manuscript submitted August 5, 1959.

SHOCK SPECTRA AND DESIGN SHOCK SPECTRA

INTRODUCTION

Historical Background

For many years engineers have used "shock spectra" as an aid in understanding the damaging potential of shock, and as a tool for stress-checking a structure whose foundation was subjected to the transient for which the spectrum was found. That is to say, the shock spectrum gives in convenient graphical form the maximum response of single-degree-of-freedom systems to the applied foundation motion.

In 1943, Biot (1) attempted to clarify the then-present thinking among engineers interested in the effects of earthquake upon large structures by defining a quantity called "effective acceleration of the earthquake for the period T." This helped the present-day concept of earthquake spectra to evolve. Sometime later, in 1948, Walsh and Blake (2) considered mechanical shock using the concept of earthquake spectra, and the result has been generally called shock spectra. Since this time the use of shock spectra has spread, and many definitions and theories for the use of these spectra have arisen.

Shock Spectrum Definition

Since shock spectrum is a term which various authors have used in different ways it is perhaps necessary to state explicitly its meaning as used in this report. A shock spectrum is the plot of the maximum absolute values of the relative displacements multiplied by scaling factors if desired, of a set of either damped or undamped single-degree-of-freedom oscillators with negligible mass which have been subjected to a shock motion, the values being plotted as a function of the natural frequencies of the simple oscillators. These graphs can be constructed with units of displacement, velocity, or equivalent static acceleration by the choice of the scaling factors; unity, ω, or ω^2/g respectively, where ω is the angular frequency of the oscillator.

The reason shock spectra are based upon relative displacement response is connected with their ultimate use, the determination of the stresses or strains in the flexible members of the system. In this report, undamped shock spectra in velocity units (relative displacement times frequency in radians per unit time) are used.

In contrast, a design shock spectrum is a plot of the values which would enable an analyst to predict the stresses, etc., in a contemplated structure for a specific type of excitation such as depth charge attack. This special kind of spectrum is then a mathematical concept rather than an easily measurable quantity.

Combination of Shock Spectra

In his 1943 paper, Biot wrote, "The envelope of the spectrum, or better still, the envelope of a collection of spectrum curves, obtained at the same location constitutes the basic information for design purposes." Unfortunately Mr. Biot was taken too literally when his ideas were incorporated into mechanical shock spectra.

Inherent in the assumption that the worst possible shock that a class of structure will ever have to undergo is the envelope of all possible shock spectra for that type of location is the following: The impedance of the foundation is very large over the entire frequency range, and the structure has very little impedance at its foundation over the frequency range. This means that the dynamic reaction of the structure upon its foundation is unable to affect the motion of the foundation, and that slightly dissimilar structures will have to respond to the same foundation motion. Of course this assumption is obviously not true, but only recently has it been explicitly shown (3) that the effect of such an analysis was very greatly in error.

In a set of field trials data was collected for a number of shocks at a large number of different points in submarines. It was hoped that by classifying the type of location, type of shock, and the equipment responding to those shocks, correlated groups could be formed which would enable the analyst to produce a series of shock spectra which would be useful in design (4). It was decided to take a 10-percent chance on failure of elastic action, so that all the available shock spectra for a particular class of location and shock were plotted on a single graph, fly-speck style, and a 90-percent fiducial limit drawn. In the computation of stresses which would be caused by this 90-percent fiducial limit curve it became immediately apparent that few mild steel structures would survive the severe shock described by the spectrum. However, the structures which were in place during the field trials did survive, so something must have been wrong with the theory of combining these shock spectra.

Purpose of the Examples

The problem of the overconservation of the fiducial limit curves was investigated (5) and it was noticed that normal-mode theory only requires the shock spectrum values at fixed-base natural frequencies* of the structure in place during the shock motion, to compute stresses. An examination of individual shock spectra in this regard showed large valleys in the region of these fixed-base frequencies. The further study of this phenomenon led to experimental and theoretical studies to examine this problem. This report discusses a few simple theoretical examples to acquaint the reader with the problem.

Consider the problem of trying to formulate a design shock spectrum. Theoretically the only values of a measured shock spectrum which are valid for dynamic response calculations are those which correspond to the fixed-base natural frequencies of the structure which was in place during the shock motion. In contrast a design shock spectra should allow an analyst to design-check a contemplated structure which has never been subjected to a shock and for which no measured shock spectrum exists. It would seem that the first step might be to compare the shock spectrum values at the fixed-base natural frequencies of structures in place during the shock motion with the general spectrum levels. This comparison might then allow the designer to formulate a general spectrum which could be useful in future designs. An attempt to do this on an imaginary class of structures subjected to the same type of shock is the subject of these examples.

EXAMPLE I

To illustrate the difference between ordinary shock spectra and design shock spectra the simple undamped free-free structure of Fig. 1 was chosen as the first example because it is a system which can be readily calculated. Let M_0 be subjected to an impulse I_0. If M_0 is considered to be the foundation, and M_1 is the mass of the equipment structure, the problem is, "What is the design shock spectrum for the equipment consisting of M_1 and K?"

*A fixed-base natural frequency is the frequency which would exist if the foundation were infinitely stiff and heavy.

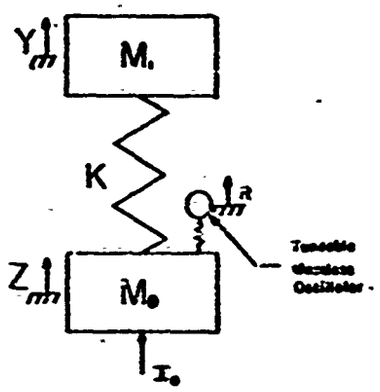

Fig. 1 - Undamped free-free system

The differential equations of motion for the equipment and the foundation are

$$M_1 \ddot{Y} + KY - KZ = 0 \tag{1}$$

$$-KY + M_0 \ddot{Z} + KZ = 0 \tag{2}$$

for which the initial condition at t = 0 is

$$\dot{Z} = V_0 = \frac{I_0}{M_0} .$$

With the notation

$$X = Y - Z$$

$$\frac{K}{M_0} = \beta^2$$

$$\frac{K}{M_1} = \alpha^2$$

$$\alpha^2 + \beta^2 = p^2$$

the solution of Eqs. (1) and (2) become

$$X = -\frac{V_0}{p} \sin pt . \tag{3}$$

Since the shock spectra under discussion are the velocity spectra mentioned before, a nondimensional form of the design shock spectrum becomes

$$\frac{X_s}{V_o} = \frac{1}{\sqrt{1 + \frac{M_1}{M_o}}} \tag{4}$$

This spectrum is seen to be independent of frequency, and Fig. 2 is a plot which shows how the design shock spectrum varies with the mass ratio. Figure 2 is in general not plotted in the usual form of a spectrum; that is to say, it is not a plot of a quantity as a function of frequency. However, once the mass distribution is known, Fig. 2 may be used to determine the value of X_s/V_o, which then becomes the design value. Since each of these values is independent of frequency the design shock spectra would be a family of horizontal straight lines in the X_s/V versus frequency plane, one line for each mass ratio.

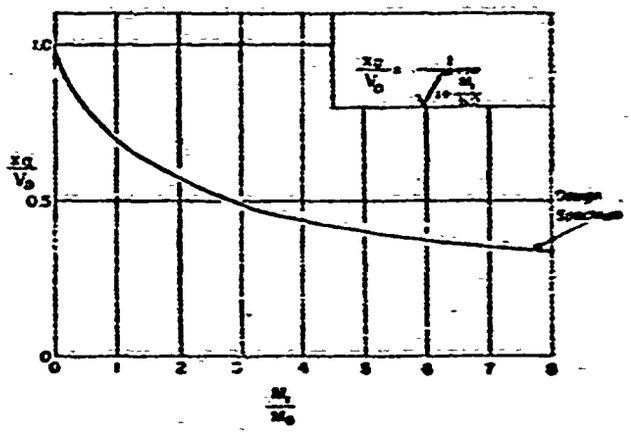

Fig. 2 – Variation of the design shock spectrum with mass ratio for the undamped free-free system of Fig. 1

Now suppose by means of the theoretical massless tuneable oscillator, an ordinary shock spectrum was obtained for the motion of M_o. The relative displacement of this oscillator times the angular frequency divided by the initial velocity of M_o becomes

$$\frac{r\omega}{V_o} = \frac{\omega p^2}{p(\omega^2 - p^2)} \sin pt + \frac{(\omega^2 - \omega^2)}{(\omega^2 - p^2)} \sin \omega t \tag{5}$$

where ω is the frequency of the tuneable oscillator and r is the relative displacement. This equation was derived by noting that the massless oscillator will not affect the foundation motion, and by solving the following Duhamel integral:

$$r = -\int_0^t \ddot{Z}(\tau) \cos \omega (t-\tau)\, d\tau. \tag{6}$$

It is of immediate interest to examine Eq. (5) closely. The oscillation is composed of two components, one of frequency p (the natural frequency of the system as a whole), and one of the frequency ω (the frequency of the massless oscillator). When ω equals a the oscillation at frequency ω (that is, the second term in Eq. 5) vanishes. That means that the massless oscillator undergoes the same motion as the mass M_1, and in this case even though the massless oscillator has frequency a, it has no component of frequency a in its motion. It is also seen that this is the only frequency at which this occurs.

Since the shock spectrum is the envelope of Eq. (5), it may be written as

$$\left|\frac{r_\omega}{V_0}\right|_{max} = \left|\frac{\omega^2}{p(\omega^2-p^2)}\right| \cdot \left|\frac{a^2-\omega^2}{\omega^2-p^2}\right| \tag{7}$$

For the region $0 \leq \omega \leq a$, Eq. (7) may be written as

$$\frac{r_\omega}{V_0} = \frac{\omega^2}{p(p^2-\omega^2)} \cdot \frac{a^2-\omega^2}{(p^2-\omega^2)} \tag{7'}$$

The points of interest are

$$\lim_{\omega \to 0} = \frac{a^2}{p^2} = \frac{1}{1+\frac{M_1}{M_0}}$$

and

$$\lim_{\omega \to a} = \frac{a}{p} = \frac{1}{\sqrt{1+\frac{M_1}{M_0}}}.$$

Now this is a function monotonically increasing with ω

$$\frac{d}{d\omega}\left(\frac{r_\omega}{V_0}\right) = \frac{\beta^2}{p(p^2-\omega^2)^2}.$$

For the region $a \leq \omega \leq p$, Eq. (7) may be written as

$$\frac{r_\omega}{V_0} = \frac{\omega^2}{p(p^2-\omega^2)} \cdot \frac{\omega^2-a^2}{p^2-\omega^2} \tag{7''}$$

The points of interest here are

$$\lim_{\omega \to p} = +\infty$$

and

$$\frac{d}{d\omega}\left(\frac{r_\omega}{V_0}\right) = \frac{\beta^2}{p(p^2-\omega^2)^2}$$

which is always positive and approaches $+\infty$ as $\omega \to p$. For the region $\omega \geq p$, Eq. (7) may be written as

$$\frac{r\omega}{V_o} = \frac{\omega\delta^2}{p(\omega^2-p^2)} + \frac{\omega^2 - \alpha^2}{\omega^2 - p^2}. \tag{7''}$$

The points of interest here are

$$\lim_{\omega \to p} = +\infty$$

$$\lim_{\omega \to \infty} = 1.$$

Note that although the limit goes to 1 the value is always greater then $(1 + M_1/M_o)^{-1/2}$. To show that this is a monotonically decreasing function:

$$\frac{d}{d\omega}\left(\frac{r\omega}{V_o}\right) = -\frac{\delta^2}{p(\omega-p)^2}.$$

Figure 3 is a superposed plot of the design shock spectra for a specific mass ratio, and of the theoretical shock spectra of Eq. (7), obtained for the same system. The curve labeled F.S. is the plot of the maximum value of the $\sin \omega t$ component of Eq. (5). The design shock spectrum is a horizontal line of height $(1+M_1/M_o)^{-1/2}$, while the theoretical shock spectrum for the system obtained on the foundation M_o is below the design shock spectrum to frequency α, and then is always above it. It should be noted that the design shock spectrum and the theoretical shock spectrum meet only at one point, the fixed-base natural frequency α of the upper equipment system. This point occurs where the coefficient of the frequency term of the massless oscillator vanishes (curve labeled F.S.). In any system with damping the large peak would have a limit, but it could be several times higher than the design value.

Figure 4 is a plot of two theoretical shock spectra for two systems having the same mass ratio. The spring in the higher frequency system was chosen in such a fashion that the fixed-base natural frequency of the simulated structure α', coincided with the natural frequency of the lower frequency system, p. The envelope line for the two spectra is marked.

It should be noted that such a combinatorial analysis would say that it would be necessary to use a very large shock spectrum value for the stiffer system α'. However, it is clearly evident that the design spectrum is not this very large value.

If many shocks were superposed in this fashion and an envelope or high fiducial limit curve drawn, then it is apparent that this would represent a totally unreasonable approximation to the proper design shock spectra.

EXAMPLE II

As a second illustration of the difference between design shock spectra and ordinary shock spectra the system of Fig. 5 will be discussed. It is assumed that M_1 and K_1 is the foundation of the "equipment" K_2 and M_2, and that the base of the combined structure undergoes a step change in velocity.

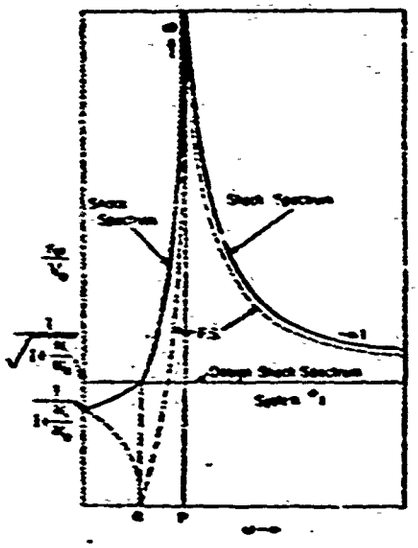

Fig. 3 – Theoretical shock spectra and design shock spectra of the free-free system of Fig. 1 for a specific mass ratio

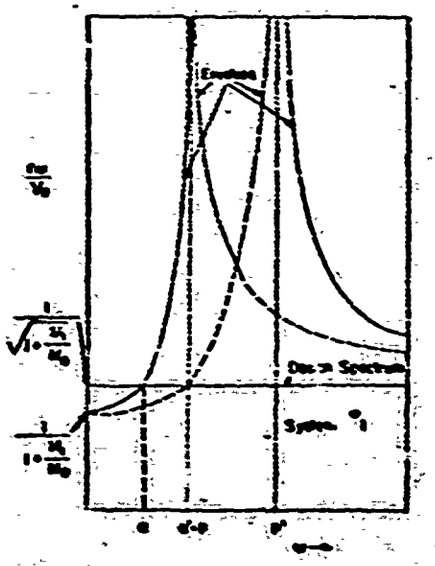

Fig. 4 – Envelope of the two theoretical shock spectra for two free-free systems having the same mass ratio compared with the design shock spectrum

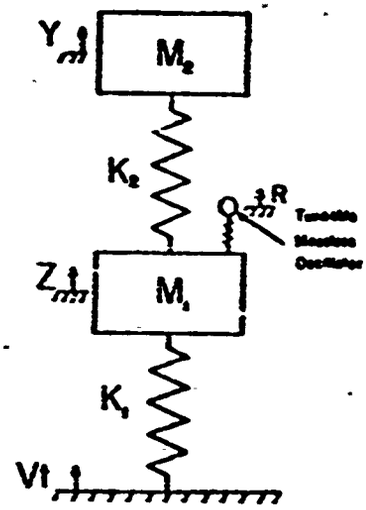

Fig. 5 - Two-degree-of-freedom system

The differential equations of motion are

$$\ddot{Z} + (\alpha^2 + \beta^2)Z - \beta^2 Y = \alpha^2 Vt \tag{8}$$

$$-\beta^2 Z + \ddot{Y} + \beta^2 Y = 0 \tag{9}$$

where

$$\alpha^2 = \frac{K_1}{M_1}$$

$$\beta^2 = \frac{K_2}{M_2}$$

$$\mu = \frac{M_2}{M_1}.$$

By the usual processes the angular natural frequencies can be shown to be

$$\omega_{1,2}^2 = \frac{1}{2}\left[\beta^2(1+\mu)+\alpha^2\right] \pm \frac{1}{2}\sqrt{\left[\beta^2(1+\mu)+\alpha^2\right]^2 - 4\alpha^2\beta^2}.$$

It is of interest to note:

$$\alpha^2\beta^2 = \omega_1^2\omega_2^2$$

$$\omega_1 \leq \alpha \leq \omega_2$$

$$\omega_1 \leq \beta \leq \omega_2$$

$$\omega_1^2 + \omega_2^2 = \beta^2(1+\mu) + a^2$$

$$\omega_2 - \omega_1 = \sqrt{(a-\beta)^2 + \mu\beta^2}.$$

The solutions of this pair of differential equations are

$$Y = \frac{Va^2\beta^2}{(\omega_2^2-\omega_1^2)}\left(\frac{1}{\omega_1^3}\sin\omega_1 t + \frac{1}{\omega_2^3}\sin\omega_2 t\right) + Vt \tag{10}$$

$$Z = Y + \frac{Va^2}{(\omega_2^2-\omega_1^2)}\left(\frac{1}{\omega_1}\sin\omega_1 t - \frac{1}{\omega_2}\sin\omega_2 t\right) \tag{11}$$

$$X = Y - Z = -\frac{Va^2}{(\omega_2^2-\omega_1^2)}\left(\frac{1}{\omega_1}\sin\omega_1 t - \frac{1}{\omega_2}\sin\omega_2 t\right). \tag{12}$$

To find the design shock spectrum, phase is ignored and this results in

$$\frac{X\beta}{V} = \frac{a^2\beta\,(\omega_2+\omega_1)}{(\omega_2^2-\omega_1^2)\,\omega_1\omega_2}.$$

This reduces to

$$\frac{X\beta}{V} = \frac{a}{\omega_2-\omega_1}$$

which leads to the final form

$$\frac{X\beta}{V} = \frac{1}{\sqrt{\left(1-\frac{\beta}{a}\right)^2 + \mu\frac{\beta^2}{a^2}}} \tag{13}$$

which is a nondimensional design shock spectrum for the equipment system, and depends upon two parameters, the frequency ratio and the mass ratio.

This function is plotted in Fig. 8 for several values of the mass ratio $\mu = M_2/M_1$. Again this is not in the usual form of a design shock spectrum, but if a frequency ratio and a mass ratio for the system were selected this would define only one design value. This again is independent of frequency and would plot as a horizontal line in a design shock spectrum.

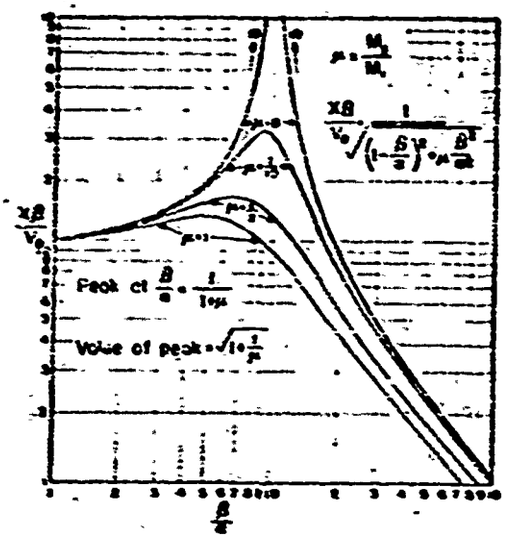

Fig. 6 – Variation of the design shock spectra with mass ratio and frequency ratio for the two-degree-of-freedom system of Fig. 5

The peak of the shock spectrum occurs at $\beta/a = 1/(1+\mu)$ and has a value of $(1+1/\mu)^{1/2}$. This equation is plotted in Fig. 7, and it is clearly demonstrated that even in this "tuned" case that the large peak falls off rapidly in magnitude with increasing mass ratio. Returning to Eq. (13), if β/a is chosen greater than $2/(1+\mu)$ the upper system tends to be isolated from the shock, since $X\beta/Y < 1$ in this case.

The next step in the analysis is to compute the theoretical shock spectrum which would be obtained if it were measured by the massless tuneable oscillator shown in Fig. 5. The equation of relative displacement for this oscillator becomes

$$r = -\frac{V_0^2\,(\omega_1^2-\beta^2)\,\sin\omega_1 t}{\omega_1\,(\omega_2^2-\omega_1^2)\,(\omega_1^2-\omega^2)} + \frac{V_0^2\,(\omega_2^2-\beta^2)\,\sin\omega_2 t}{\omega_2\,(\omega_2^2-\omega_1^2)\,(\omega_2^2-\omega^2)}$$

$$+ \frac{V_0^2\omega}{(\omega_2^2-\omega_1^2)}\left\{\frac{\omega_1^2-\beta^2}{\omega_1^2\,(\omega_1^2-\omega^2)} - \frac{\omega_2^2-\beta^2}{\omega_2^2\,(\omega_2^2-\omega^2)} - \frac{\omega_2^2-\omega_1^2}{\beta^2-\omega^2}\right\}\sin\omega t \qquad (14)$$

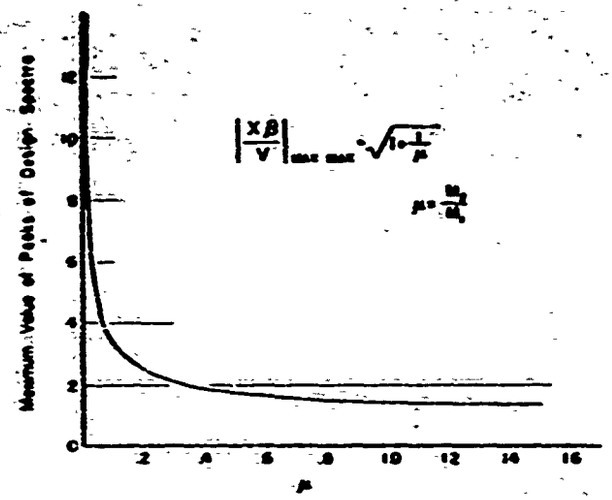

Fig. 7 - Largest value of the design shock spectra for the two-degree-of-freedom system

where ω is the massless oscillator frequency. The nondimensional form of the shock spectrum becomes

$$\frac{r_\omega}{V} = \left|\frac{\omega^2\omega(\omega_1^2-\omega^2)}{\omega_1(\omega_2^2-\omega_1^2)(\omega_1^2-\omega^2)}\right| + \left|\frac{\omega^2\omega(\omega_2^2-\omega^2)}{\omega_2(\omega_2^2-\omega_1^2)(\omega_2^2-\omega^2)}\right|$$

$$+ \left|\frac{\omega^2\omega(\omega_1^2-\omega^2)}{\omega_1^2(\omega_2^2-\omega_1^2)(\omega_1^2-\omega^2)} - \frac{\omega^2\omega^2(\omega_2^2-\omega^2)}{\omega_2^2(\omega_2^2-\omega_1^2)(\omega_2^2-\omega^2)} - 1\right|. \tag{15}$$

To sketch this shock spectrum, note that

$$\lim_{\omega\to 0} = 1$$

$$\lim_{\omega\to\omega_1} = \infty$$

$$\lim_{\omega\to\omega} = \frac{\omega}{\omega_2-\omega_1} = \text{design shock spectrum value}$$

$$\lim_{\omega\to\omega_2} = \infty$$

$$\lim_{\omega\to\infty} = 0.$$

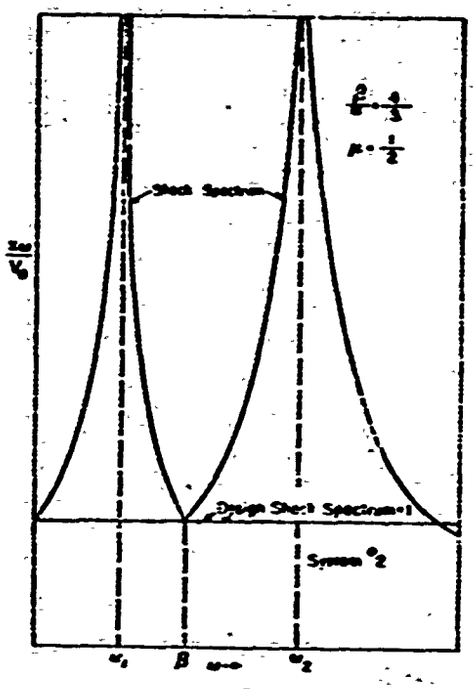

Fig. 8 – Comparison of theoretical and design shock spectra for the two-degree-of-freedom system

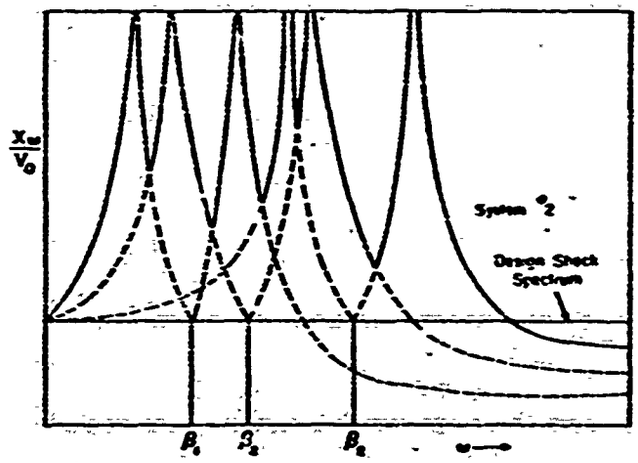

Fig. 9 – Envelope of three shock spectra compared with the design shock spectrum for the two-degree-of-freedom system

It is also important to note that the coefficient of the sin ωt term in Eq. (14) vanishes when $\omega = \omega_0$. Figure 8 is a plot of a comparison, for a system, between the theoretical shock spectrum and the design shock spectrum.

Figure 9 is a sketch of the superposition of three shock spectra for the same mass and frequency ratio; a comparison with the design shock spectrum for this condition is included. The solid line is the approximation to the design shock spectrum which would be found by an envelope type of analysis. It is evident that the over conservative assumptions inherent in such an analysis yield a spectrum which is in no way representative of a design shock spectrum, and is extremely severe.

EXAMPLE III

There is an important elementary question left to be answered in this simple treatment of the problem. What would happen to the shock spectrum peak of a system in which the fixed-base natural frequency of the structure coincided with a natural frequency of the system as a whole? Consider Fig. 10, and assume that a record of the motion of Y_2 is made when the point Y_0 undergoes a disturbance. In terms of the parameters

$$\omega^2 = \frac{K_3}{M_3}$$

$$\lambda^2 = \frac{K_2}{M_2}$$

$$\phi^2 = \frac{K_1}{M_1}$$

$$\frac{K_3}{M_2} = \frac{M_3}{K_2}\omega^2$$

$$\frac{K_2}{M_1} = \frac{M_2}{K_1}\lambda^2$$

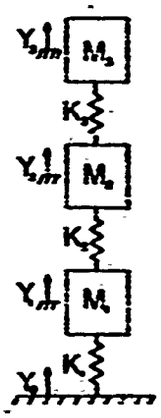

Fig. 10 – Three degree-of-freedom system

the differential equations can be set up for application of normal-mode theory (6) and the mode shapes can be written as

$$\frac{\bar{X}_2}{\bar{X}_3} = 1 - \frac{p^2}{\omega^2} \tag{16}$$

and

$$\frac{\bar{X}_2}{\bar{X}_1} = \frac{M_1}{M_2\lambda^2}\left(p^2 - \frac{M_2}{M_1}\lambda^2\right) \tag{17}$$

where p is a system natural frequency. The frequency equation is

$$(\omega^2-p^2)\left[\left(\frac{M_3}{K_2}\omega^2+\lambda^2-\omega^2\right)\left(\frac{K_2}{M_3}\lambda^2+\omega^2-p^2\right)-\frac{K_2}{K_1}\lambda^4\right]$$

$$-\frac{M_3}{K_2}\omega^4\left(\frac{M_2}{M_1}\lambda^2+\omega^2-p^2\right)=0. \tag{18}$$

By the hypothesis that one of the p's coincides with an ω, then from Eq. (18)

$$\frac{M_2}{M_1}\lambda^2+\omega^2-p^2=0$$

when

$$p=\omega$$

Applying this to Eq. (16) and (17),

$$\frac{X_2}{X_3}=0. \text{ and } \frac{X_2}{X_1}=0$$

indicating a node exists at Y_2 for this frequency. The response recorded at Y_2 becomes

$$Y_2=-\frac{\bar{X}_{21}\sum_j M_j\,\bar{X}_{j1}}{\sum_j M_j\,\bar{X}_{j1}^2}\frac{1}{p_1}\int_0^t \bar{Y}_0(\tau)\sin p_1(t-\tau)\,d\tau$$

$$-\frac{\bar{X}_{23}\sum_j M_j\,\bar{X}_{j3}}{\sum_j M_j\,\bar{X}_{j3}^2}\frac{1}{p_3}\int_0^t \bar{Y}_0(\tau)\sin p_3(t-\tau)\,d\tau+Y_0(t)$$

and the frequency $p_2=\omega$ does not appear. This means that no large transient buildup would occur and there would therefore be no large peak at this frequency if Y_0 is not very frequency selective.

CONCLUDING REMARKS

By means of these few elementary examples it is hoped that some insight has been gained by the reader concerning the problem of using shock spectra for design purposes. It has been shown that design shock spectra and theoretical shock spectra can be quite different, and the error involved in using one for the other can be appreciable.

The use of an envelope (or high fiducial limit) type of analysis leads to results as shown in Figs. 4 and 9, giving a false impression as to the severity of the shock for which the system must be designed. This happens because the use of the large peaks tends to control the final position of the curve in the fiducial limit type of combinatorial analysis, and it was demonstrated that these peaks at the combined system's natural frequencies do not enter into design shock spectrum considerations. This was shown to be true even when the "equipment" fixed-base natural frequency coincided with a natural frequency of the system as a whole in Example III.

The other major point of interest is that the component of response of the massless oscillators at their natural frequency disappeared when it coincided with the fixed-base natural frequency of the equipment structure. In a fashion the plot of this component is akin to the Fourier spectrum of the foundation motion, and in the case where the motion ends in finite time, the "after shock spectrum" is truly the Fourier spectrum of the foundation velocity forcing function.

Perhaps this report has raised more questions than it has answered. However, the proper evaluation of design shock spectra is of extreme importance and is worthy of serious consideration.

REFERENCES

1. Biot, M.A., "Analytical and Experimental Methods in Engineering Seismology," Trans. ASCE 108:365 (1943)

2. Walsh, J.P., and Blake, R.E., "The Equivalent Static Accelerations of Shock Motions," Proceedings of the Society for Experimental Stress Analysis 6 (No. 2):150 (1949)

3. O'Hara, G.J., "Effect Upon Shock Spectra of the Dynamic Reaction of Structures," NRL Report 5236, Dec. 1958

4. Blake, R.E., and Gossett, J.D., "Design Criteria for a Shock Testing Machine for Heavy-Weight Submarine Equipment," NRL Memorandum Report 254 (Confidential Report, Unclassified Title), Jan. 1954

5. Belsheim, R.O., and Blake, R.E., "Effect of Equipment Dynamic Reaction on Shock Motions of Foundations," NRL Report 5009 (Confidential Report, Unclassified Title), Oct. 1957

6. Blake, R.E., and Swick, E.S., "Dynamics of Linear Elastic Structures," NRL Report 4420, Oct. 1954

• • •

Naval Research Laboratory

Technical Library

Research Reports & Bibliography Unit

To: Larry Downing, DTIC

From: Darlene DeMarr, Code 5596.3

Date: February 27, 2006

Subject: Change in Distribution Statement and/or Classification

---

Please change the distribution statement on the following document to

"Approved for Public Release – Distribution Unlimited":

AD0230007, NRL-5386.

Please change the classification of the following documents to Unclassified:

ADC065152	NRL-3774
ADC067525	NRL-3582
ADC066573	NRL-3574
ADC061828	NRL-3964
ADC068099	NRL-3756
ADC068845	NRL-3758
ADC068231	NRL-3782
ADC068176	NRL-3788
ADC062613	NRL-3812
ADC067772	NRL-3816
ADC062696	NRL-3846

Thank you,

Darlene DeMarr

Darlene DeMarr
(202) 767-7381
demarr@nrl.navy.mil

Naval Research Laboratory

Technical Library

Research Reports & Bibliography Unit

To: Larry Downing, DTIC

From: Darlene DeMarr, Code 5596.3

Date: 5/17/07

Subject: Change in Distribution Statement

Re: AD0230007

Please change the distribution statement on the above-referenced document to:

"Public Release – Distribution Unlimited"

Thank you,

Darlene DeMarr

Darlene DeMarr
(202) 767-7381
demarr@nrl.navy.mil