UNCLASSIFIED

AD NUMBER

AD162502

NEW LIMITATION CHANGE

TO

Approved for public release, distribution unlimited

FROM

Distribution authorized to U.S. Gov't. agencies and their contractors; Administrative/Operational Use; 30 DEC 1957. Other requests shall be referred to Air Force Wright Air Development Center, DET 1 AFRL/WSCL [STINFO], 2261 Monahan Way, Wright-Patterson AFB, OH 45433-7035.

AUTHORITY

88 CS/SCOKIF [FOIA] ltr dtd 2 Sep 2009

THIS PAGE IS UNCLASSIFIED

UNCLASSIFIED

| AD NUMBER |
| --- |
| AD162502 |
| CLASSIFICATION CHANGES |
| TO<br><br>unclassified |
| FROM<br><br>confidential |
| AUTHORITY |
| 31 Dec 1969, DoDD 5200.10 |

THIS PAGE IS UNCLASSIFIED

UNCLASSIFIED

| AD NUMBER |
| --- |
| AD162502 |
| CLASSIFICATION CHANGES |
| TO<br>confidential |
| FROM<br>secret |
| AUTHORITY |
| 31 Dec 1960, DoDD 5200.10 |

THIS PAGE IS UNCLASSIFIED

[redacted]

# AD 625 02

# Armed Services Technical Information Agency

## ARLINGTON HALL STATION
## ARLINGTON 12 VIRGINIA

FOR
MICRO-CARD
CONTROL ONLY

1 OF 4

NOTICE: WHEN GOVERNMENT OR OTHER DRAWINGS, SPECIFICATIONS OR OTHER DATA ARE USED FOR ANY PURPOSE OTHER THAN IN CONNECTION WITH A DEFINITELY RELATED GOVERNMENT PROCUREMENT OPERATION, THE U. S. GOVERNMENT THEREBY INCURS NO RESPONSIBILITY, NOR ANY OBLIGATION WHATSOEVER; AND THE FACT THAT THE GOVERNMENT MAY HAVE FORMULATED, FURNISHED, OR IN ANY WAY SUPPLIED THE SAID DRAWINGS, SPECIFICATIONS, OR OTHER DATA IS NOT TO BE REGARDED BY IMPLICATION OR OTHERWISE AS IN ANY MANNER LICENSING THE HOLDER OR ANY OTHER PERSON OR CORPORATION, OR CONVEYING ANY RIGHTS OR PERMISSION TO MANUFACTURE, USE OR SELL ANY PATENTED INVENTION THAT MAY IN ANY WAY BE RELATED THERETO.

[redacted]

This document is the property of the United States Government. It is furnished for the duration of the contract and shall be returned when no longer required, or upon recall by ASTIA to the following address:
Armed Services Technical Information Agency, Arlington Hall Station, Arlington 12, Virginia

**NOTICE: THIS DOCUMENT CONTAINS INFORMATION AFFECTING THE NATIONAL DEFENSE OF THE UNITED STATES WITHIN THE MEANING OF THE ESPIONAGE LAWS, TITLE 18, U.S.C., SECTIONS 793 and 794. THE TRANSMISSION OR THE REVELATION OF ITS CONTENTS IN ANY MANNER TO AN UNAUTHORIZED PERSON IS PROHIBITED BY LAW.**

SECRET

32 cys

FZM-36-688
30 December 1957

AD No. 162502
ASTIA FILE COPY

FC

AD No. 162502
ASTIA FILE COPY

THIS DOCUMENT CONSISTS OF 155 PAGES
COPY NO. 10 OF 50 SERIES A

CONVAIR
FORT WORTH

# SUMMARY REPORT, PROJECT TOM-TOM

(Title Unclassified)

FILE COPY

Return to
ASTIA
ARLINGTON HALL STATION
ARLINGTON 12, VIRGINIA
Attn: TISSS

58AA 7937

JUL 16 1958

SECRET

58 WCLS 2547

S E C R E T

FZM-36-688
30 December 1957

# SUMMARY REPORT,

# PROJECT TOM-TOM

Submitted Under

CONTRACT NO.
AF33(600)-23415

PREPARED BY Wm Sifer APPROVED D A Redwine
Assistant Project Engr.

CONVAIR
A Division of General Dynamics Corporation
(Fort Worth)

581A 7937

S E C R E T

581 1.47

## FOREWORD

This report presents a summarization of the work that was accomplished on the Wing-Tip Coupling Program known as Project Tom-Tom. This project was authorized under Contract AF33(600)-23415 in July, 1953, with Convair-Fort Worth, a Division of General Dynamics Corporation, Fort Worth, Texas, acting as prime contractor. Thieblot Aircraft Company of Bethesda, Maryland, as subcontractor to Convair-Fort Worth, was awarded a contract for the engineering study, design, and development of the wing-tip coupling system by Letter Contract Convair Purchase Order No. 198168D.

Air Force technical direction and guidance was under the auspices of the Wright Air Development Center of Wright-Patterson Air Force Base. The following personnel contributed to this portion of the program:

| | |
|---|---|
| Mr. B. A. Hohmann, | WCLSR-4, Chief, Flight Development Section, Aircraft Laboratory |
| Lt. Ronald Tyre, | WCLSR-4, Project Engineer, Tom-Tom Flight Development Section, Aircraft Laboratory |
| Mr. Robert J. Woodcock, | WCLCM, Stability and Control Project Engineer, Flight Control Laboratory |
| Mr. C. B. Westbrook, | WCLCM, Chief, Aeromechanics Branch, Flight Control Laboratory |

The work under this project was accomplished in two parts during the period from July, 1953, to September, 1956.

Part I consisted of the study and design of the wing-tip coupling system. The study included wind tunnel tests. Part I work was accomplished by Thieblot Aircraft Company with Convair-Fort Worth monitoring and assisting as necessary.

Part II consisted of the fabrication and installation of the wing-tip coupling system, ground testing, and flight testing. This

portion of the work was accomplished by Convair-Fort Worth with Thieblot Aircraft Company providing liaison during fabrication and installation of the coupling mechanism.

This document is classified SECRET, since the information relative to this program may be of use in the development of future weapon systems.

## INTRODUCTION

The principle of wing-tip coupling, whereby a small aircraft is towed from the wing tips of a larger aircraft, is not new. First recorded experiments were in Germany in 1944-45. In 1949 and 1950, the Wright Air Development Center at Wright-Patterson Air Force Base developed and tested a system in which a Q-14 aircraft was towed on one wing tip of a C-47 aircraft. During the period 1949-1953, a second Air Force project was carried out by the Republic Aviation Corporation to develop and test a system for towing two straight-wing F-84F aircraft on the wing tips of a B-29 aircraft. Results of these two programs indicated that three basic problems existed:

1. Automatic control of the towed aircraft
2. Coupling in turbulent air
3. A quick, positive release triggered by a predetermined angle of towed aircraft roll.

These two programs demonstrated that the solution of these problems would make the wing-tip concept feasible and safe.

The advantages of such a system are obvious. The range of the towed aircraft, for strike purposes or reconnaissance purposes, is increased enormously. Moreover, this range increase is obtained at but slight expense to the carrier range because the increase in wing aspect ratio of the composite configuration reduces induced drag below that for the carrier alone.

Project Tom-Tom was initiated to provide a weapon system for existing requirements of the Strategic Air Command. The need existed for a maneuverable fighter aircraft capable of long-range operations for either bombing or reconnaissance purposes. The Tom-Tom project, consisting of a B-36 carrier and two RF-84F parasite fighters was felt to be one answer to this need. The mission radius of the composite weapon system would be considerably greater than that of the B-36 alone. Furthermore, it would permit simultaneous attack on two targets, and provide maximum safety for the B-36 carrier by allowing it to remain outside the combat zone. An additional potential advantage of Tom-Tom was the possibility of combining it with the Ficon System.* This would have allowed

*The Ficon system was an RB-36/RF-84 composite wherein one RF-84 made in-flight attachments and detachments to the RB-36 by means of an extended trapeze. For towing, the trapeze was retracted permitting partial enclosure of the fighter in the bomber fuselage. (See Convair reports FZS-36-308 and FZA-36-308).

the B-36 to tow three airplanes and would also have permitted fatigue relief for the wing-tip airplane pilots by allowing them access to the B-36 through aircraft rotation.

In November, 1954, the Strategic Air Command's requirement for this type of a system was cancelled because of the production status of newer type aircraft. The Tom-Tom project was, however, carried on from this point as a research and development type program to further explore and develop the wing-tip coupling concept. It was considered that the information obtained from such a program would be helpful in future programs involving a floating wing-tip design.

In the interest of starting flight testing as early as possible, it was planned that the flight test program be accomplished in two phases. Phase I was to cover the flight testing of a single RF-84F on one wing tip of a B-36 with the minimum hardware required to accomplish retrieving, towing, and launching. Phase II was to cover the flight testing of the complete system with two RF-84Fs and all hardware complete, including all utilities such as fuel transfer, heating and pressurization, electrical power supply, night lighting provisions, etc. Arrangements were made to modify and use RB-36F airplane serial No. 49-2707, although the original production program was based on modification of RB-36D model airplanes.

The program proceeded according to plan through flight No. 18 of Phase I flight testing. An incident which occurred on flight No. 18 led to a re-evaluation of the remaining portion of the program with the result that the program was terminated. It was decided that the additional data that could be obtained would not justify the continuation of the program considering the cost, time, and risk involved.

The complete analysis of the flight data obtained from all flights, including flight No. 18, was not finished until some months after the decision to discontinue flight testing had been made. This analysis indicated that the decision had been wise inasmuch as the single-fighter configuration exhibited neutral stability at the highest test flight speed (219 mph, IAS). Since wind tunnel tests had demonstrated that the two-fighter configuration reached instability speed much sooner than the single-fighter configuration (possibly 35 mph sooner), it seems obvious that the Tom-Tom system as it existed could not have been made operational. It seems highly likely in view of the data and conclusions presented in the stability analysis (FZA-272, 13 September 1957), that the decision to terminate the flight test

program would have been made before flight test speeds had advanced another 10 to 20 mph. Such speeds would not be acceptable, operationally. It would seem, therefore, that the only real loss suffered by the termination of the project was the disappointment experienced at the time of the decision by those who had labored so long and diligently on the project.

~~It is felt that~~ the skewed-axis concept has been demonstrated as a satisfactory solution to the wing-tip coupling stability problem. Many factors contributed to the marginal design in the Tom-Tom program. However, it is believed that the analytical approach to the stability problem on this program has been verified. This verification plus the many practical problems overcome on the program should permit, by intelligent application of the knowledge gained, many improvements in future wing-tip coupling projects with a much greater likelihood of success. It would seem that the greatest gain from the program has been the verification of the skewed-axis concept and the development of a satisfactory analytical approach to the stability of such a system.

This page was intentionally left blank.

TABLE OF CONTENTS

| | Page |
|---|---|
| Foreword | iii |
| Introduction | v |
| List of Figures | xii |
| Background | 1 |
| General History and Summary | 5 |
| Design | 19 |
| Design Objectives | 19 |
| Pre-Design Studies of a Coupling Mechanism | 19 |
| Detail Design of the Coupling Mechanism | 34 |
| Structural Modifications | 45 |
| Design Modifications of the Coupling Mechanism | 47 |
| Recommended Coupling Mechanism Design Changes for Future Consideration | 52 |
| Utilities Systems Design | 55 |
| Proof Load and Spring-Rate Testing | 59 |
| Structural Proof Tests and Determination of Spring Rates | 59 |
| Operational Tests of Coupling Mechanisms | 67 |
| Stability and Control | 73 |
| Static Analysis | 73 |
| Stability and Control Studies | 73 |

TABLE OF CONTENTS (Cont'd.)

| | Page |
|---|---|
| Weight and Balance | 81 |
| Performance | 89 |
| Prediction of Aerodynamics and Performance Characteristics | 89 |
| Wind Tunnel Tests | 90 |
| Flight Tests | 90 |
| Conclusions | 91 |
| Wind Tunnel Test Program | 93 |
| Static Force Model Wind Tunnel Tests (Jan., Feb., 1954) | 93 |
| Semi-Span Dynamic Wind Tunnel Tests | 96 |
| Full-Span Dynamic Wind Tunnel Tests | 97 |
| Flutter | 103 |
| Flight Tests | 105 |
| Proximity Flight Tests | 105 |
| Ground Operational Tests | 113 |
| Prototype Flight Tests | 113 |
| Structures | 131 |
| Structural Criteria | 131 |
| Structural Design | 131 |
| Structural Development Tests | 132 |
| Flight Loads | 132 |

TABLE OF CONTENTS (Cont'd.)

Page

Conclusion and Recommendations . . . . . 135

Stability and Control . . . . . 135

Detail Design of the Tom-Tom Configuration. . . . . 143

A Critique of Tom-Tom as an Over-all Effort . . . . . 147

References . . . . . 151

## LIST OF FIGURES


| Figure | | Page |
|---|---|---|
| 1 | Drum Type Coupling - Contact Condition . . . . . | 20 |
| 2 | Drum Type Coupling - Coupled Flight Condition. . . | 21 |
| 3 | Drum Type Coupling - Latch and Release Mechanism . | 22 |
| 4 | Drum Type Coupling - Utilities Connection. . . . . | 23 |
| 5 | Mast Type Coupling - Fighter Jaws. . . . . | 25 |
| 6 | Mast Type Coupling - Coupled Condition . . . . . | 26 |
| 7 | Ball and Socket Joint Coupling - Approach Condition. . . . . | 27 |
| 8 | Ball and Socket Joint Coupling - Coupling and Tow Condition. . . . . | 28 |
| 9 | Universal Joint Coupling - Bomber Mechanism. . . . | 29 |
| 10 | Universal Joint Coupling - Coupled Condition . . . | 30 |
| 11 | Universal Joint Coupling - Fighter Arrangement . . | 31 |
| 12 | RB-36F Aft Attachment Area . . . . . | 32 |
| 13 | RF-84F Forward Lock Mechanism. . . . . | 35 |
| 14 | RB-36F Forward Attach Point. . . . . | 36 |
| 15 | Latching Mechanisms Prior to Making Single-Point Contact. . . . . | 37 |
| 16 | Looking Aft at Latching Mechanism in Single-Point Contact. . . . . | 38 |
| 17 | RF-84F Aft Latch, Showing Pitch Lock and Yaw Lock. | 40 |

LIST OF FIGURES (Cont'd.)


| Figure | | Page |
|---|---|---|
| 18 | Coupling Mechanism Showing Utilities Connection . . | 42 |
| 19 | RF-84F Wing Structural Modification . . . . . | 46 |
| 20 | B-36 Wing Structural Modification . . . . . | 48 |
| 21 | View of Head Showing Horns Added. . . . . | 53 |
| 22 | Schematic - Heating, Ventilation, and Pressurization. . . . . | 56 |
| 23 | Schematic - RF-84F Fuel System. . . . . | 57 |
| 24 | Over-all View of Tower for Coupling and De-Coupling Operations. . . . . | 60 |
| 25 | Close-up View of RF-84F in Tower. . . . . | 61 |
| 26 | Latch Release Test Setup. . . . . | 68 |
| 27 | Latch Release Test Setup - Down Load. . . . . | 69 |
| 28 | Latch Release Test Setup - Up Load. . . . . | 70 |
| 29 | Latch Release Test Setup - Aft Load . . . . . | 71 |
| 30 | Two-Point Attachment (Skewed Axis Arrangement). . . | 75 |
| 31 | Single-Point Attachment . . . . . | 76 |
| 32 | Correlation of Flight Data. . . . . | 79 |
| 33 | Massie Memorial Wind Tunnel Test Setup. . . . . | 94 |
| 34 | Massie Memorial Wind Tunnel Test Setup - Attachment of F-84 to B-36 . . . . . | 95 |
| 35 | Full Span Wing-Tip Coupled Models at Simulated Flight Speed. . . . . | 98 |
| 36 | Full Span Wing-Tip Coupled Models at Zero Speed - Looking Aft . . . . . | 99 |

LIST OF FIGURES (Cont'd.)


| Figure | | Page |
|---|---|---|
| 37 | Full Span Wing-Tip Coupled Models at Zero Speed - Looking Forward | 100 |
| 38 | View of Fighter-Bomber Coupling | 102 |
| 39 | RB-36F Coupling Boom Mock-Up Extended | 106 |
| 40 | RF-84F Probe Mock-Up - 4-Foot Jaws Open | 107 |
| 41 | RF-84F Probe Mock-Up - 2-Foot Jaws Closed | 108 |
| 42 | RF-84F Probe Mock-Up - 2-Foot Jaws Open | 109 |
| 43 | Proximity Flight Test - In-flight View | 111 |
| 44 | RF-84F Approaching RB-36F Coupling Boom Mock-Up | 112 |
| 45 | Composite Ground Test RF-84F Hoisted in Preparation for Coupling to RB-36F | 114 |
| 46 | RF-84F Probe Adjacent to RB-36F Head Prior to Single-Point Coupling | 115 |
| 47 | Plan View of Single-Point Attachment RF-84F to RB-36F | 116 |
| 48 | RF-84F and RB-36F in Single-Point Coupled Position | 117 |
| 49 | Close-Up - Single-Point Coupled Position RF-84F and RB-36F | 118 |
| 50 | RF-84F Aft Latch Adjacent to RB-36F Rack Prior to Two-Point Coupling | 119 |
| 51 | Plan View of Two-Point Attachment RF-84F and RB-36F | 120 |
| 52 | Simulated Release of RF-84F Under Up and Drag Loads | 121 |

LIST OF FIGURES (Cont'd.)


| Figure | | Page |
|---|---|---|
| 53 | Simulated Release of RF-84F Under Down Load . . . . | 122 |
| 54 | RF-84F and RB-36F in Fully-Coupled Attachment . . . | 126 |
| 55 | RF-84F and RB-36F Showing Failure of Bomber Head Attachments During Flight No. 18. . . . . | 127 |
| 56 | RB-36 Head Falling Free Shor ly After Failure of Head Attachments During Flight No. 18 . . . . . | 128 |
| 57 | Summary of Operations, Tom-Tom Flight Test Program. | 129 |

## BACKGROUND

The first record of an attempted wing-tip coupling is that performed in Germany at the DFS-Glider Research Station (Deutsche Forschungs - Anstalt Fuer Sigelflug) in 1944-1945. Two KL35 light airplanes of equal size were coupled in flight, wing-tip to wing-tip. The two aircraft were loosely joined wing-tip to wing-tip with a long rope which permitted routine take-off. After climbing to a safe altitude the rope was pulled in by one of the planes until the two joints at the wing tips met and locked into place. The airplanes were then able to fly in wide circles, change altitude, etc. Both pilots experienced changing load distributions around the longitudinal axis. It was found that these could be equalized and flying the coupled aircraft did not present any special difficulties. However, the project was not further explored by the German Air Ministry, apparently from lack of interest.

In 1949 and 1950, the Wright Air Development Center carried out a project to investigate the feasibility, general handling characteristics, and technique of wing-tip to wing-tip coupled flight of two airplanes. A device for coupling a C-47A and Q-14B wing-tip to wing-tip was designed and flight tested by the Aircraft Laboratory at Wright-Patterson Air Force Base with the assistance of the Experimental Fabrication Laboratory and the Flight Test Division. The coupling mechanism was made as simple as possible by using a single ball joint attachment mechanism, allowing three degrees of rotation. This consisted of a steel coupling ring welded to the "D-ring" of a glider tow release mounted on the C-47A wing-tip and a steel lance attached to the wing-tip of the Q-14B. The coupling technique required the positioning of the Q-14B wing-tip lance just ahead of the C-47A wing-tip ring. The Q-14B pilot then reduced throttle permitting the lance to enter the ring and lock in the single-point attachment. A release cable was routed from the tow release through the wing and into the fuselage where it joined the release cable of the tail glider tow release. The coupling lance was designed so that the Q-14B airplane could rotate 22 degrees in pitch, 22 degrees in yaw, and be unrestricted in bank while coupled to the wing of the C-47A airplane. An "engaging dog" in the ring caused rotation of the lance when the relative bank angle between the two aircraft changed. This actuated limit microswitches which in turn actuated the elevator servo trim motor on the Q-14B providing automatic roll stabilization. A type A-4 remote flight control autopilot was used in the Q-14B which made possible automatic control of the aircraft for lateral, longitudinal, and directional disturbances, maintaining the attitude fixed by remote control or by the human pilot. Wing-tip lights were also installed for night flying.

Initial attempts at in-flight coupling were first attempted 18 August 1949. Between that time and 3 May 1950 thirty-five flights were made, including two night flights.

As the result of these flight tests, it was concluded that wing-tip to wing-tip coupling of two aircraft was feasible and should be further investigated. Reference 30 gives a more detailed account of the Wright Air Development Center project.

A contract was awarded to the Republic Aviation Corporation in June, 1949, for the development and evaluation of in-flight towing of F-84 airplanes on the wing tips of a B-29 bomber. This program was for the purpose of further investigation of the wing-tip coupling concept developed by WADC. Modification of the B-29 and F-84 airplanes was preceded by stability and performance studies (Reference 39). These studies showed the system was feasible but was a highly divergent unstable system and required a means of controlling the airplane in towed flight. The first system designed consisted of a two-point suspension system, wherein the F-84 was locked to the B-29 wing at fore-and-aft locations, permitting the F-84 to rotate about the roll axis only (Reference 40). Between 21 July 1950 and 20 October 1950, thirteen flights were monitored by Republic (Reference 36). Additional flights were made by the USAF to evaluate different coupling methods and night coupling. However, the two-point suspension system had several deficiencies and the coupling technique was difficult. At the request of the USAF, the towing system was redesigned to include an automatic control system. The automatic control system was subcontracted to the Westinghouse Corporation. Redesign of the B-29 towing equipment consisted of the installation of a rear latch that restrained the F-84 in yaw only, permitting freedom in pitch and roll, and a retracting electrical wing-tip interconnector to provide electrical power from the B-29 to the F-84 for the autopilot system and auxiliary equipment. Basic redesign of the F-84 consisted of installation of irreversible boost systems in the elevator and aileron control systems, and installation of the autoflight control system. After considerable checking and ground testing the first towed flight with this configuration was conducted on 18 March 1953 (Reference 35). Five flights were conducted with this system, the last being on 24 April 1953, at which time an accident occurred after the aircraft were coupled and locked into position and the automatic flight control system was engaged (Reference 34 ). The F-84 airplane rolled up violently and continued on over, coming down on the wing of the B-29. Both aircraft and their crews were lost. Malfunction of the automatic flight control system was presumed to be the specific cause of this accident. The wing-tip coupling program was terminated after this accident.

These two programs demonstrated that small aircraft could be towed on the wings of a larger aircraft and that further investigation of this concept was justified. The major difficulty appeared to be in the control and stability of the towed aircraft. Convair-Fort Worth was invited on 27 August 1952 to submit a proposal for a two-phase program in which a B-36 and two F-84 airplanes would be used for the coupled aircraft configuration.

## GENERAL HISTORY AND SUMMARY

Convair was first officially invited to participate in what was later known as the "Tom-Tom" project by Air Force letter dated 27 August 1952. Convair's preliminary proposal submitted 16 January 1953 was withdrawn on 13 February 1953 because in the interim an increased work load in Convair's Technical Design Section on previously committed programs made accomplishment of the engineering task impossible.

After receipt of Convair's withdrawal letter AMC advised Convair that the Thieblot Aircraft Company had the capabilities for accomplishing all engineering work in connection with the project. In view of AMC's recommendation, Convair stated a willingness to participate in the program and a new proposal was submitted on 2 June 1953. This proposal was based on Thieblot's acting as subcontractor to Convair for all engineering and Convair accomplishing the fabrication, modification, ground testing, and flight testing. Convair, as prime contractor, had the responsibility for monitoring and approving the Thieblot design.

Letter Contract AF33(600)-23415 was accepted by Convair on 10 July 1953 officially starting work on the Tom-Tom project. Thieblot Aircraft Company signed their subcontract with Convair on 28 July 1953.

Prior to the actual signing of the contracts, WADC held a meeting at Wright-Patterson Air Force Base on 6-7 July 1953 to brief both Convair and Thieblot on the history of wing-tip-towing projects in preparation for the start of work on the Tom-Tom project. The need for safety considerations was stressed by WADC personnel in view of the accident which occurred on the Republic B-29/F-84E wing-tip coupling project.

On the basis of the 28 July 1953 go-ahead to Thieblot, the initial drawing releases were scheduled for 1 February 1954, with final releases on 1 September 1954. Based on this schedule, Convair was to start flight testing on 1 February 1955.

Preliminary design studies accomplished by Thieblot during the period from go-ahead to 1 November 1953, revealed no new concepts or approaches to the problem of towing fighter-type airplanes on the wing-tips of a bomber airplane. This somewhat unsatisfactory situation, plus Thieblot's apparent slow progress on the stability and control analyses to support the preliminary

design effort, caused Convair to initiate some studies independent of Thieblot's. The result of Convair's work showed a skewed-axis* arrangement to be very promising. A preliminary stability investigation report (MR-A-329) was prepared by Convair and submitted to Thieblot on 27 October 1953, with the request that the skewed-axis arrangement be studied as a possible answer to a new and better approach to the wing-tip coupling problem. It appeared, from the limited study made by Convair, that an arrangement with only freedom of rotation about an axis skewed front end outboard of the direction of flight would provide an inherently dynamically stable system. The basic coupling arrangement that was being studied by Thieblot provided the attached fighter with freedom in pitch and roll. This arrangement was known from previous programs to provide a dynamically unstable system for fully coupled flight and required constant corrections, either by the pilot or an automatic flight control system. The arrangement proposed by Convair permitted only fighter freedom in roll about the skewed axis at the wing tip.

A review of Thieblot's stability work was held at Fort Worth on 18-19 November 1953, at which time an evaluation was made of the over-all analytical program in order to insure that the objectives to be attained were compatible with the design schedules for the project. Flutter aspects of the coupled configuration were also discussed. It was agreed that classical flutter was not a problem on this installation because the frequencies involved were not high enough to require the use of non-stationary aerodynamic terms in the stability analysis. It was agreed that the problem was one of dynamic stability.

On 23 November 1953, at the request of WADC, Convair and Thieblot representatives made a joint presentation to WADC to acquaint concerned personnel with the program.

In an effort to expedite the stability and control investigations leading up to the point where a selection of the coupling configuration could be made, Convair assumed the task of studying the skewed-axis arrangement to determine the merits of this system while Thieblot was asked to continue its work on the free-in-pitch-and-roll system to obtain comparable information. Plans were made to compare the results of these studies and select the most desirable system for further detailed study by Thieblot. Preliminary design study was to continue on both arrangements by Thieblot so that design problems, as well as the stability problems, could be evaluated for both systems.

*See page 75 for a sketch defining "skewed-axis".

A conference was held at WADC on 14 January 1954 to present the flutter picture of the coupled aircraft to concerned WADC personnel. At this meeting Convair pointed out that classical flutter was not a problem. The low frequencies involved made the problem one of dynamic stability. It was agreed that no further flutter work would be done but WADC requested that model tests be conducted to evaluate the stability of the configuration. This conference assumed that the final coupling arrangement should provide an inherently stable system and was slanted toward the selection of the skewed-axis arrangement. It was agreed that if inherent stability were not obtained, the proposed model tests would be very complicated and, probably, not practical.

On 10, 11, and 12 February 1954, Thieblot and Convair personnel held a series of meetings to review the stability and control work accomplished by Thieblot and Convair. The purpose of the conferences was to evaluate and select a basic coupling arrangement. More specifically, a comparison of Thieblot's work on the fighter free-in-pitch-and-roll system and Convair's work on the skewed-axis system was made. In connection with the stability and control work review, the design, structural, and dynamic model testing aspects of the project were also discussed. As a result of the review, Convair and Thieblot mutually agreed that work should proceed on design and study of the skewed-axis system since the comparison studies showed it to have definite advantages over the system which is free in pitch and roll. The primary reason for selecting the skewed-axis over the free-in-pitch-and-roll system was to obtain a system which, it appeared, could be made inherently stable in the cruise-coupled configuration. Among other corollary advantages the skewed-axis promised probable elimination of a complex automatic flight control system.

The decision to go to the skewed-axis arrangement was reviewed with WADC personnel at Wright-Patterson Air Force Base on 18 February 1954. WADC concurred with the decision to go to the skewed-axis system.

As the coupling mechanism layouts developed, it became apparent that proximity flight testing of the fighter to the wing of the B-36 with mock-up type mechanism installed was desirable to explore the problems of fighter approach, effects of wing-tip vortices, flying in position for initial contact, and effects of turbulence. WADC, in February 1954, requested Convair to include these proximity flights in the Tom-Tom program.

Since the success of the project was to a large part dependent on a thorough stability and control analysis, WADC awarded Contract AF33(600)-2476 to the J. B. Rea Company to make an independent theoretical study of the stability of wing-tip-coupled aircraft early in 1954. The objective of the study was to investigate the general case of stability for wing-tip coupled aircraft and then to make a specific analysis for the RF-84F coupled to the wing of the B-36. Results of this study were published in J. B. Rea report, "Theoretical Study of the Stability of Wing-Tip Coupled Aircraft," dated 28 December 1954 (Reference 41).

Static force model wind tunnel tests were conducted in the Massie Memorial Wind Tunnel at Wright-Patterson Air Force Base during January and early February, 1954. The Thieblot Aircraft Company designed and constructed two 1/26-scale F-84F models and modified a Convair 1/26-scale B-36 for the tests. The purpose of these tests was to determine the position of the F-84F in relation to the B-36, giving the best aerodynamic characteristics for the composite configuration. In addition, the tests were to provide data on loads at the attachment points of the F-84F to the B-36 mechanism.

On 13 and 14 May 1954, representatives of Thieblot and Convair presented to WADC personnel a review of the engineering work accomplished and discussed the various phases of the work with concerned WADC Laboratory personnel.

By the middle of May, 1954, Thieblot's rate of progress on the stability and control work pointed to a need for bolstering this phase of the engineering effort. The complex nature of the stability analysis and Thieblot's lack of experience with this type of problem made necessary Convair's direct participation in this work. Agreement was reached on 9 July 1954 in a conference at Thieblot that Thieblot's stability and control personnel would move to Convair-Fort Worth for a period of two or three months to accomplish critical stability and control work under the direction of Convair's Aerophysics Section.

Since it had been decided by the Air Force that Convair pilots would fly the fighters and the B-36 during flight testing of the prototype, Convair pilots were to be checked out in the C-47/Q-14 prior to flying the proximity flights. Convair pilots could thus become familiar with wing-tip coupling techniques and procedures. It would also permit them to compare the RB-36/RF-84F system with the C-47/Q-14 system during the proximity flight tests. These check-out flights were made in June, 1954. Two Convair pilots were checked out in the Q-14 and were able to make successful couplings without difficulty.

Convair submitted a cost proposal for the dynamic model testing program on 11 August 1954. The test program was proposed in two parts. The first part consisted of semi-span tests to be accomplished at David Taylor Model Basin. The second part consisted of a test on the complete model configuration for final proof that the selected arrangement was stable. This full-span testing was to be accomplished at the NACA Langley Air Force Base 19-foot pressure tunnel.

As a result of the problems encountered in accomplishing the engineering work, it became obvious that a delay in the start of flight testing would result. Rescheduling was not attempted at this time, however, since Convair wanted time to evaluate the stability and control work in order to better set a schedule.

The design, fabrication, and installation of the mock-up coupling mechanism on the left-hand wing tip of RB-36F No. 49-2707 and on the right-hand wing tip of RF-84F airplane No. 51-1848 was completed in August, 1954. The first proximity flight was held on 26 August 1954, the second on 27 August 1954, and the third and last on 29 August 1954. The purpose of the proximity flights was to qualitatively evaluate effects of drag due to the coupling mechanism, approach paths to the coupling boom, effects of B-36 wing-tip vortex, effects of turbulence created by the coupling mock-up, effects of the B-36 propellers, and the feasibility of establishing contact. Results of the proximity flight tests showed RF-84F approach and flight in proximity to the RB-36 mechanism to be such that contacts and couplings to the RB-36 mechanism were considered feasible.

The dynamic model wind tunnel tests of the 1/25-scale B-36J* semi-span cantilevered wing with a 1/25-scale RF-84F fighter attached at the wing tip were run at the David Taylor Model Basin during the period of 6-27 October 1954. The purpose of semi-span dynamic model wind tunnel tests was to determine the effects of various design and physical parameters on the dynamic stability of the coupled composite configuration. The results showed the skewed-axis to be stable over a range of skew-angles. The data was used in the design, until such time as the full-span model test results could be obtained.

During October, 1954, Convair issued a new schedule for the first flight. This schedule was based on completion of all engineering by Thieblot on 1 February 1955. This schedule called for flight testing to begin on 21 September 1955.

*The B-36J model was used because of availability.

During October, 1954, Thieblot completed the operating mock-up which was used for demonstration purposes at the Air Force Development Engineering Inspection (DEI) held 16 and 17 November 1954. Representatives of Hdq USAF, Hdq ARDC, WADC, Thieblot, and Convair participated in the inspection. Some 34 "Requests for Alterations" (RFAs) were written, 21 of which required action by the Air Force Board. At the DEI it was announced by the Air Force that the Tom-Tom project was now strictly research and development, since the Strategic Air Command's requirement for such a system had been cancelled.

Following the DEI, Thieblot advised Convair they were in an overrun condition and would need additional funds to complete their work. Convair immediately started plans for an investigation of all phases of Thieblot's work on Project Tom-Tom. Arrangements were made to make an on-the-spot review at Thieblot on 4-7 January 1955.

By the end of November, 1954, all the Thieblot stability and control engineers who had been at Convair since August returned to Thieblot with definite agreements on what work was to be completed, based on the work that had been accomplished at Convair.

On 4-7 January 1955, a seven-man Convair team visited Thieblot for the purpose of reviewing the overrun condition and evaluating the engineering work yet to be completed. As a result of the review, Convair decided to assist Thieblot by supplying engineers to supervise the accomplishment of the remaining work. All work on the automatic flight control system was stopped since it was felt that enough inherent dynamic stability of the coupled aircraft would be obtained by the skewed-axis arrangement. Thieblot drafting methods were revised to get the maximum output with the minimum engineering manhours. The remaining electrical design was transferred to Convair to better expedite the completion of this work. A new engineering schedule was prepared which showed completion of all engineering needed for the first phase of flying by 1 April 1955. No new schedule was prepared for the first flight of the airplanes, since it was agreed certain hardware would not be required for the first phase of flying. All utility provisions such as fuel transfer, hot air and pressurization provisions, and RF-84F engine closure doors were not to be tested during the first flights. To get the flight test program started, and in the interest of safety, it was agreed that the flight program would be divided into two phases. The first phase would be flight tests with one RF-84F only and with only the basic coupling mechanism installed. The second phase would include the second RF-84F and all utilities. With this rearrangement of the flight test program,

it was felt that the first flights might be possible as scheduled for 21 September 1955 or close enough so no reschedule was in order. Subsequent difficulties did defer first flight date considerably, however.

Dynamic wind tunnel tests of a 1/25-scale model B-36 with 1/25-scale model RF-84F fighters coupled at each wing tip were run at the NACA 19-foot wind tunnel, Langley Air Force Base, Virginia, during February and March, 1955. The purpose of these tests was to determine the effects of various design and physical parameters on the dynamic stability of the coupled system with the bomber model approximating free flight as nearly as possible. They also provided a means of substantiating and extending the semi-span test results and investigating effects of bomber rigid body and antisymmetric degrees of freedom. Results of these tests demonstrated that a skew-angle could be set for which the composite configuration was stable through an acceptable speed range.

Aside from the problem of stability when in the fully-coupled configuration, the single-point or "initial latch-on" stability required considerable analysis and tests. On 7 July 1955, Convair demonstrated the single-point flyability to the Air Force, using an analog simulator. The purpose of the tests was to qualitatively evaluate the flyability of the RF-84F when attached at a single-point near the fighter wing tip to the wing tip of the RB-36. This system was simulated on an analog computer, which was interconnected with the Convair cockpit simulator in such a manner that the pilot could "fly" the simulator "on instruments" and evaluate his capability of controlling the airplane.

As a preliminary to the RF-84F/RB-36 evaluation, the characteristics of the Q-14/C-47 were simulated. As the two Convair pilots and numerous others had flown the Q-14 while attached in single-point to the wing of a C-47 airplane, this simulation was made to confirm the RF-84F simulation and to provide a positive means for the pilot's comparison.

The results of this analysis showed that the single-point-of-attachment condition, though statically unstable, could be controlled by the pilot at all flight conditions except perhaps in severe turbulence.

A conference was held at Convair-Fort Worth on 8 July 1955 with representatives of WADC, Thieblot Aircraft Company, and Convair present to review the stability and control work. At this time the work remaining to be accomplished by the Thieblot Aircraft Company prior to the flight test program was definitely established.

A decision was also made as to the reports that Thieblot would be required to prepare and submit to WADC to complete their work.

Modification of the RB-36F right-hand wing tip and installation of the coupling mechanism had progressed to the point where static proof load tests were started in September, 1955. Provisions were made to apply drag loads and vertical loads to simulate gusts on the fighter in both single-point and two-point positions. In the first phase of the proof load tests, a permanent buckling of the secondary structure of the trailing edge of the wing occurred at 100 percent of the simulated ultimate load. Additional reinforcement of the wing structure was accomplished and the static proof load tests were again applied. The tests were completed during November, 1955, with no further difficulty. Spring constants for the RB-36 coupling mechanism and wing measured during these tests showed approximately a 65 percent increase in chordwise bending rigidity and a 45 percent decrease in torsional rigidity from calculated values. The vertical bending rigidity also increased slightly. It was, therefore, necessary to use these new values for stability and control analysis. During this same period, static proof load tests were completed on the RF-84F wing and coupling mechanism without any difficulties.

Evaluation test flights of the RF-84F airplane, serial No. 51-1848, without wing modification or the coupling mechanism installed, were conducted between the latter part of October, 1955, and the middle of November, 1955. A total of eleven flights was conducted for the purpose of determining the optimum operating condition and aircraft control configuration for initial flight tests of the prototype composite configuration. As a result of these flight tests, the optimum operating conditions were established as 185 knots indicated airspeed, 15,000 feet altitude, 10 percent flap extension, and a stick damper setting of 4.0. Stick break-out forces encountered were considered in excess of desired values for both aileron and stabilator, but adequate control could be maintained.

The coupling mechanism on RF-84F airplane, serial No. 51-1849, was completed in December, 1955, and minor adjustments were made on both the RB-36F and RF-84F coupling mechanisms in preparation for operational ground tests.

During December, 1955, it became apparent that completion of stability and load analyses must be expedited because of the rapidly approaching flight date, and Thieblot Aircraft Company was so advised.

Ground operational tests were started in mid-December, 1955. However, numerous deficiencies were found requiring a considerable amount of redesign and rework of various components within the coupling mechanisms. The major problem was failure of the RF-84F aft latch to release under load. Necessary redesigns and modifications of the coupling mechanism were accomplished and the ground operational tests were completed in February, 1956.

A conference was held at Fort Worth between representatives of WADC, Thieblot, and Convair on 17 January 1956 to again review the stability and control work and determine what portion of this work was mandatory prior to flight tests. As the result of the review of this work, it was agreed that the results of the skewed-axis analysis by Matrix equation was the key work requiring completion before flight. At this time, it also was apparent that the slippage due to the stability and control work, as well as the difficulties encountered with the coupling mechanism during the ground operational tests, would further delay first flight tests. A realignment of the Tom-Tom program was necessary at this time to permit accomplishment of as much flight testing as possible with remaining funds. Work was temporarily stopped on everything except the control and stability analyses required prior to flight tests, and the hardware necessary to carry out the first phase of flight testing.

Several conferences were held during the months of February and March to expedite the stability and control work. Spring rates on the RF-84F wing and coupling mechanism were measured during March, 1956, to provide data needed in the stability and control analysis. In the interest of getting flight testing under way, Convair started a minimum work program on stability and control and dynamic load analysis as a check against Thieblot's work. The Convair-Pomona Division computer facilities were made available to the Convair-Fort Worth Division for this work.

An Air Force Development Engineering Safety Inspection was held at Fort Worth 21 and 22 March 1956. There was a total of 34 "Requests for Alterations" (RFAs) written. Twenty-four of these required contractor action prior to first flight, but did not constitute major changes that would delay the flight test program.

The first flight of the Tom-Tom RF-84F airplane, serial No. 51-1849, was made on 13 April 1956. The purpose of this flight was for shakedown of the RF-84F with the coupling mechanism installed. It demonstrated that the handling characteristics of the RF-84F with the coupling mechanism installed were acceptable and very little different than the standard RF-84F.

The first flight with both the RB-36F and RF-84F Tom-Tom airplanes was made on 14 April 1956. The purpose of this flight was for RB-36F shakedown, proximity checks, and single-point contacts. It was found that the prototype configuration performed essentially the same as did the mock-up in the proximity flight tests. Six contacts, all of short duration, were made and it appeared that the fighter would be stable and controllable in single-point. In making contacts, difficulty was encountered with the RB-36F receiver head remaining tilted about the pitch axis under aerodynamic loads. The RF-84F probe upper jaw was slightly damaged on the last contact. The RB-36F receiver head spring loads about the pitch axis were increased and the damaged probe jaw was repaired.

A conference was held at Convair-Fort Worth on 18 April 1956 to discuss flight test plans. Representatives from the USAF, ARDC, WADC, Thieblot and Convair were in attendance. It was agreed that the next two flights would be devoted to further evaluation of single-point stability and controllability. The first of these two flights would be with both forward and aft latches inoperative and, if successful, the forward latch would be made operative for the second flight. The aft latch was to be made operative after satisfactory evaluation of couplings and releases with the forward latch operative.

Between 24 April 1956 and 8 June 1956, there were eleven composite flight tests made. Single-point and two-point couplings, as well as releases, were evaluated during these flights.

The RF-84F was towed in the two-point position for approximately 23 minutes on flight No. 11 and 45 minutes on flight No. 12. The RF-84F appeared to be very stable during all operations. Oscillations resulting from mild upsets induced about the fighter's pitch axis damped out in from one to three cycles.

At the conclusion of flight No. 12 on 8 June 1956, all work on project Tom-Tom was temporarily suspended because of depletion of funds, except for standby maintenance of the RB-36 and the two RF-84F aircraft.

The Air Force was interested in obtaining further stability flight data to use for correlation with the stability calculations that had been made. Convair was, therefore, requested to submit a proposal covering costs and schedules to continue flight testing and complete stability and control analyses. Convair-Fort Worth prepared two proposals for a minimum effort flight test program. One was for continuation of the single-fighter flight testing and the other was for a two-fighter flight test

program. These proposals were submitted to AMC 23 July 1956 and discussed with WADC personnel on 24 and 25 July 1956 at Wright-Patterson Air Force Base.

Authorization to proceed with the two-fighter flight test program was granted on 17 August 1956. This was for a minimum effort program and did not include the incorporation of the utilities coupling into the RB-36F and RF-84F mechanism for in-flight fuel transfer, heating pressurization, electrical power supply, etc. Provisions were included, however, for completion of reports on the stability and control analysis, and correlation of flight test data with wind tunnel tests. Work was started immediately in preparing the RB-36F and RF-84F, Serial No. 51-1849, for further flight testing of the single-fighter configuration. Work to complete the modification required for the two-fighter configuration flight testing was also begun.

Flight testing of the single-fighter configuration was resumed on 31 August 1956. Six flights were made between this time and 26 September 1956 to further investigate the flight characteristics, stability, and structural loads of the single fighter Tom-Tom configuration. Successful two-point couplings were accomplished on only two of these flights. On one of these flights (flight No. 16) the RF-84F was towed in the two-point position, with the yaw and pitch locks engaged, for approximately one hour and twenty minutes. No difficulty was encountered with control of the RF-84F and it was stable at all times. Induced rollwise oscillations of ± 5 degrees maximum amplitude damped out without difficulty.

The last flight, No. 18, was made on 26 September 1956. Single-point coupling was accomplished and immediately the RF-84F became unstable and uncontrollable. Yaw, pitch, and roll oscillations occurred simultaneously and increased rapidly in amplitude so that on the third cycle the RF-84F rolled up to approximately a 20-degree wing-up attitude. The RF-84F pilot initiated a release on the down-swing and release occurred at 30 to 45 degrees wing-down attitude with a considerable shudder noticed in the RB-36 aircraft. As the RF-84F left the RB-36F, the RB-36F receiver head assembly fell free. Whether release was from pilot initiation or from the automatic roll release mechanism was never definitely established. A safe and uneventful landing was made by both aircraft. Post-flight investigation revealed major damage to the coupling mechanism and the wing tip structure of both the RF-84F and RB-36.

A conference was held at Convair-Fort Worth on 27 September 1956 between representatives of WADC and Convair to review the events of flight No. 18 and establish a plan of procedure from this point on. It was agreed that Convair would prepare an engineering report covering the events of flight No. 18. This was to include findings and deductions from a study of failed parts and instrumentation records; data obtained thus far and what might be gained by a continuation of the program; what changes would be necessary to continue; and Convair's recommendations as to continuing the program. It was also agreed that Convair would prepare cost and schedule estimates for repair of the damage incurred, and for continuation of the program. All other work was stopped.

By letter dated 16 October 1956 Convair submitted all data agreed to during the conference of 27 September 1956 to the Air Materiel Command and recommended that the Tom-Tom flight test program be terminated. Convair considered that the cost in repairing the damaged aircraft and coupling mechanism, time involved in carrying out the program, and risk of further incidents that might occur in flight testing were not justified by the additional information which might be obtained.

A conference was held at Convair-Fort Worth between representatives of Hq. USAF, ARDC, Thieblot and Convair on 20 November 1956 to consider Convair's recommendations for termination of the Tom-Tom flight test program. After the matter had been thoroughly discussed, Air Force personnel appeared to be in agreement with Convair and indicated that they would recommend to their respective commands that Convair's proposal submitted 16 October 1956 be acted upon. No commitments were made at this time since a final decision would be made at higher levels. However, it was agreed that technical reports generated by Thieblot would be reviewed to determine what additional work, if any, should be done on these reports.

A conference was held at Thieblot Aircraft Company on 14 December 1956 between WADC, Thieblot, and Convair personnel to review reports that had been generated by Thieblot and to determine the final disposition of such reports. It was agreed that the Thieblot Aircraft Company would submit reproducible copies of their reports directly to the Air Force without further work except for three reports that were to be authorized for completion. These were the stability and control report, static force model wind tunnel test report, and a summary report.

Authorization to proceed with work on outstanding Thieblot and Convair reports was granted by the Air Force on 17 January 1957 since there were sufficient funds available to complete this work. Thieblot Aircraft Company was notified of this authorization and work was started by both Convair and Thieblot to complete all reports.

Official termination of the flight test program was received by Letter Termination Notice dated 28 March 1957. This terminated the balance of the incomplete work except for preparation and submittal of engineering reports and data, removal of instrumentation from the Tom-Tom aircraft, preparation and delivery of RB-36F, serial No. 49-2707, and RF-84F aircraft, serial Nos. 51-1848 and 51-1849.

All instrumentation was removed from the three Tom-Tom aircraft. RB-36F serial No. 49-2707 was prepared for a one-time flight, delivered to the Air Force on 8 May 1957, and was flown to Davis-Monthan Air Force Base, Arizona. The two RF-84F airplanes were shipped to Hill Air Force Base, Arizona, 10 July 1957 without being returned to their original configuration in accordance with Air Force instructions.

## DESIGN

### A. DESIGN OBJECTIVES

The two previous wing-tip coupling programs monitored by Wright Air Development Center served as a basis for establishing the requirements of Project Tom-Tom. The over-all design objective was to develop a fully operational wing-tip coupling system for towing an RF-84F parasite aircraft on each wing of a B-36. This system was to be such that the parasite aircraft could shut down its engine, close its air induction system, and be automatically stabilized when mechanically coupled to the wing tip of the B-36. In coupled flight, the RF-84F parasite was to be supplied with cockpit heating, ventilation, pressurization, oxygen supply, electrical power, and refueling and defueling from the B-36 carrier. An intercommunication system between the RF-84F and B-36 was also to be provided.

The design of a coupling mechanism for pick-up and tow of the fighter was the first major problem to be solved. The two basic objectives for this mechanism were to provide a four-foot square target for initial contact between the two aircraft and to provide a fully automatic release for the parasite when the roll angle reached a preset value.

The design of the utilities couplings and de-coupling also presented major problems. The objectives here were built around the need for reliable and safe operations during coupling and de-coupling in flight.

### B. PRE-DESIGN STUDIES OF A COUPLING MECHANISM

The configurations studied consisted of a forward coupling point about which the parasite aircraft would - at initial coupling - be free in pitch, roll, and yaw. Varying degrees of restraint at an aft coupling point were considered. The first design efforts considered utility couplings located at or near the forward coupling point. Four basic configurations were studied (Reference 29).

The first configuration studied was a drum-type coupling mechanism. This consisted of a drum carried on a parallelogram which was extended from the wing tip of the B-36 to provide the horizontal dimension of the coupling target. The vertical dimension of the coupling mechanism was provided by vertically opening type jaws mounted on the RF-84F wing tip. The principles of this approach are shown by Figures 1 through 4. All utility connections were through the drum-type coupling mechanism. This configuration was not carried past the layout study stage and no detailed design was made.



Preceding Page Blank

SECRET

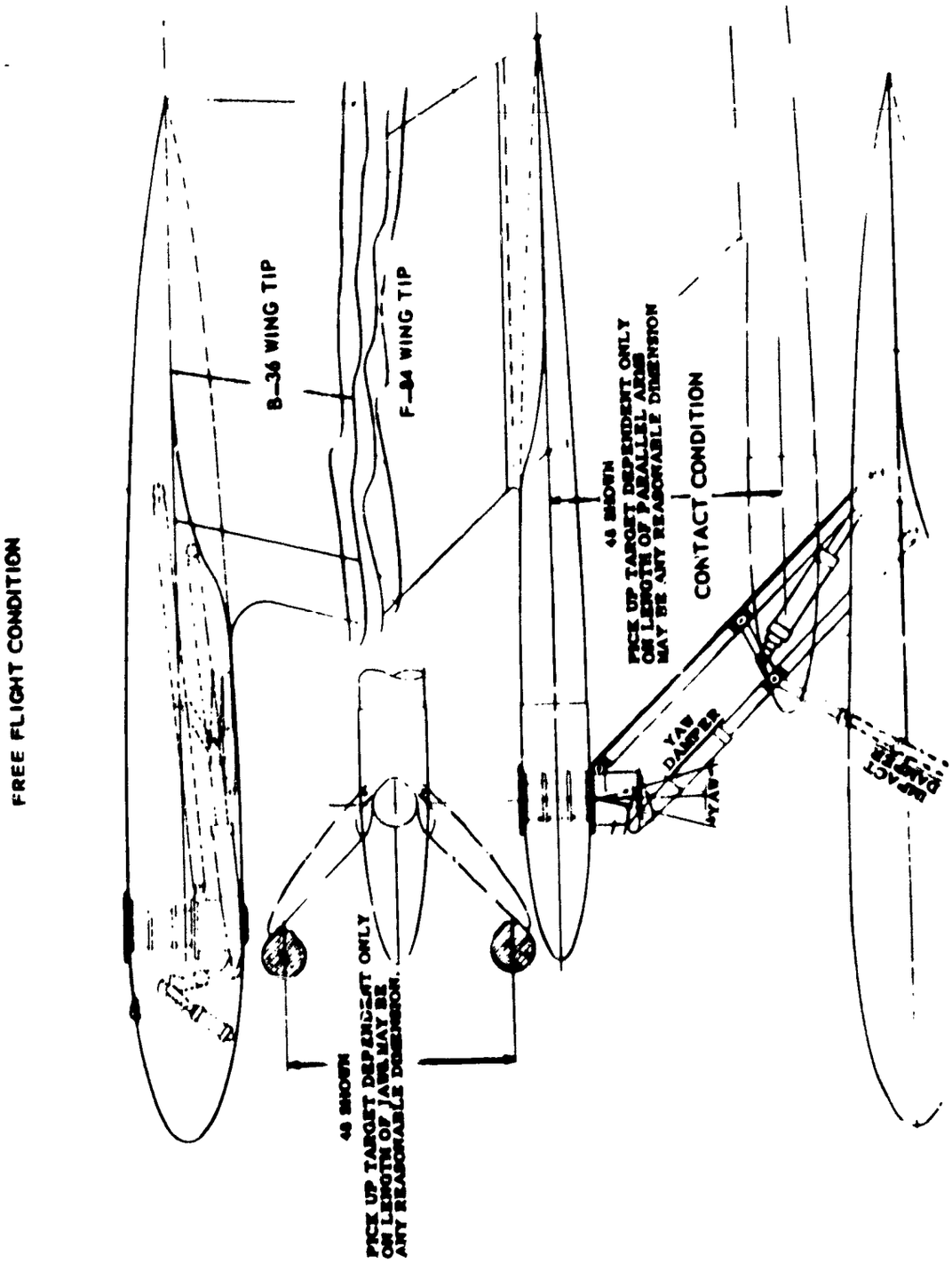


FIGURE 1 - DRUM TYPE COUPLING - CONTACT CONDITION

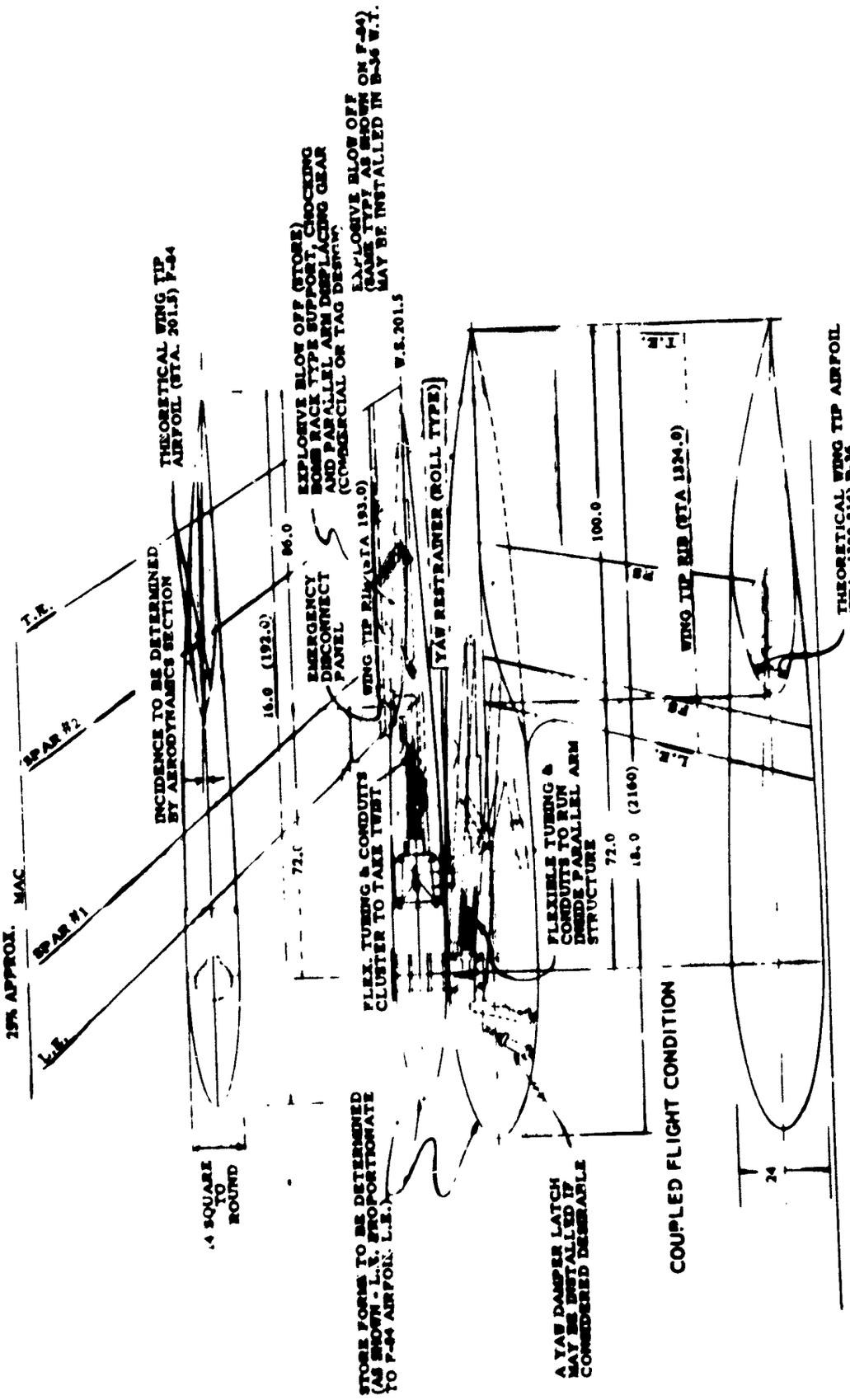


FIGURE 2 – DRUM TYPE COUPLING – COUPLED FLIGHT CONDITION

SECRET

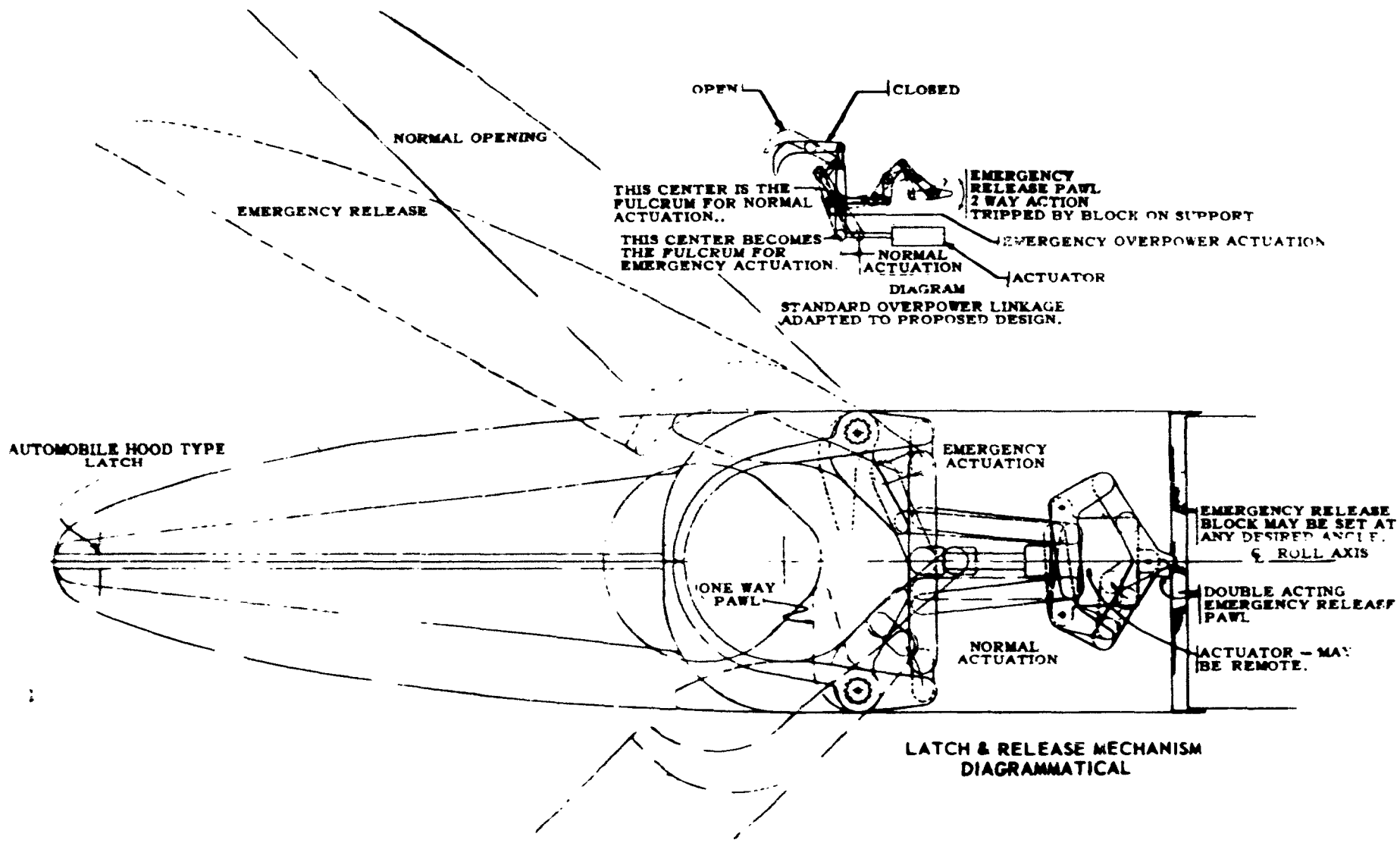


FIGURE 3 - DRUM TYPE COUPLING - LATCH AND RELEASE MECHANISM

SECRET

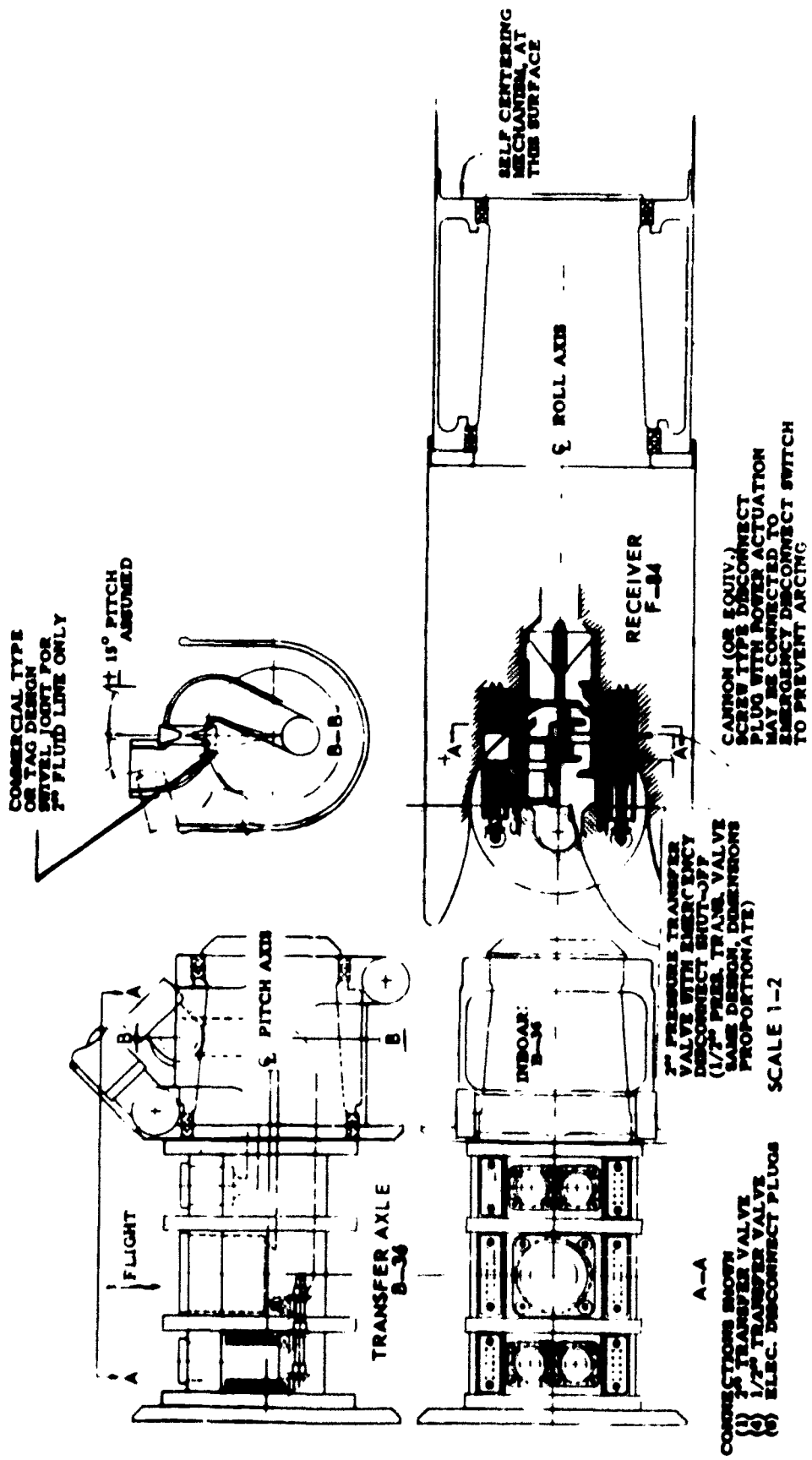


FIGURE 4 - DRUM TYPE COUPLING - UTILITIES CONNECTION

The second configuration studied was a mast-type coupling mechanism. It consisted of a cylindrical mast that extended from the wing tip of the B-36 by means of a hydraulic actuator and provided the horizontal dimension of the target. The vertical dimension for the target was again provided by vertically opening type jaws mounted on the RF-84F wing tip. The pitch, roll, and yaw axes were provided by a ball joint built into the jaws. After coupling, the mast was retracted until the parasite reached the fully coupled position. A flexible coupling at a point close to the forward lock was provided for the utilities connection. Figures 5 through 6 show some of the details of the studies made on this configuration.

A third approach to the forward mechanism was a ball-and-socket arrangement carried on a parallelogram attached to the B-36 wing tip. This extended to form the four-foot horizontal dimension of the target. The vertical dimension for the target was the same vertically opening type jaws mounted on the wing tip of the RF-84F aircraft. Initial studies considered making the utilities connection through the ball-and-socket joint. This did not appear feasible and consideration was given to making a separate connection for the fuel adjacent to the forward coupling point. Figures 7 through 8 show details of this configuration. By this time the requirements for a yaw lock at the aft position of the coupling mechanism had been firmly established. This was to provide complete yaw restraint but no pitch restraint. The first design considered for a rear lock consisted of a V-shaped track on the fighter aft wing tip and an overcenter wedge lock on the B-36 wing tip. (See Figure 8 ). The lock automatically engaged when the forward coupling point was retracted to bring the RF-84F into the fully coupled position. The release mechanism for the rear lock was coupled to the forward lock release. Considerable study was made of this configuration.

The fourth configuration studied was a universal-joint type forward coupling joint carried on a parallelogram attached to the B-36 wing tip with an aft coupling point providing full restraint of the fighter in pitch and yaw. In principle, the forward coupling point was similar to the ball-and-socket configuration. The forward coupling point on the bomber was mounted on axes of pitch and roll. The yaw axis was provided on the fighter. Initially all utilities were taken through one connector located adjacent to the forward lock. The principles of this configuration are shown by Figures 9 through 11. (NOTE: As the design progressed the decision was made to locate all utility couplings aft of the rear coupling point).

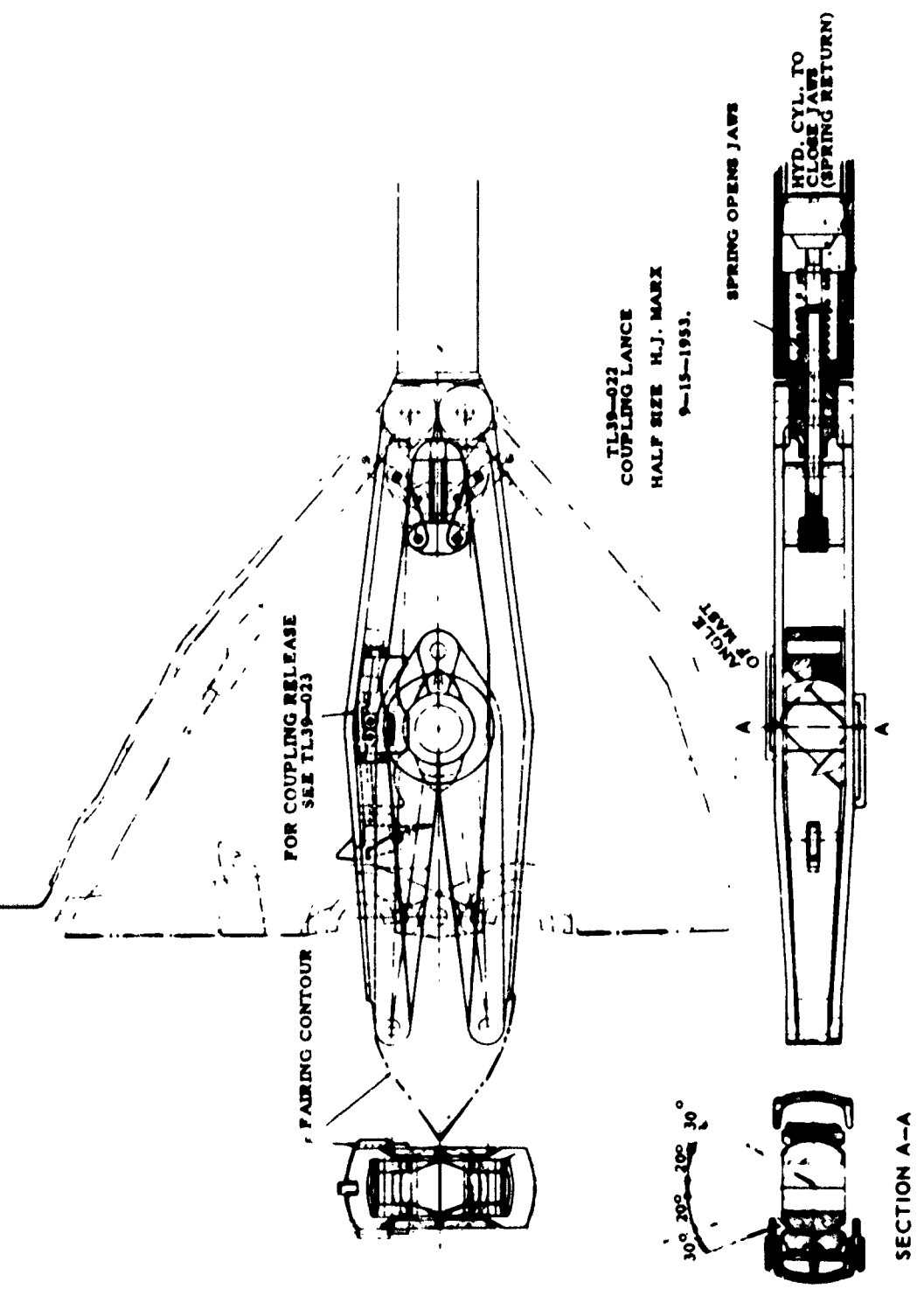


FIGURE 5 – MAST TYPE COUPLING – FIGHTER JAWS

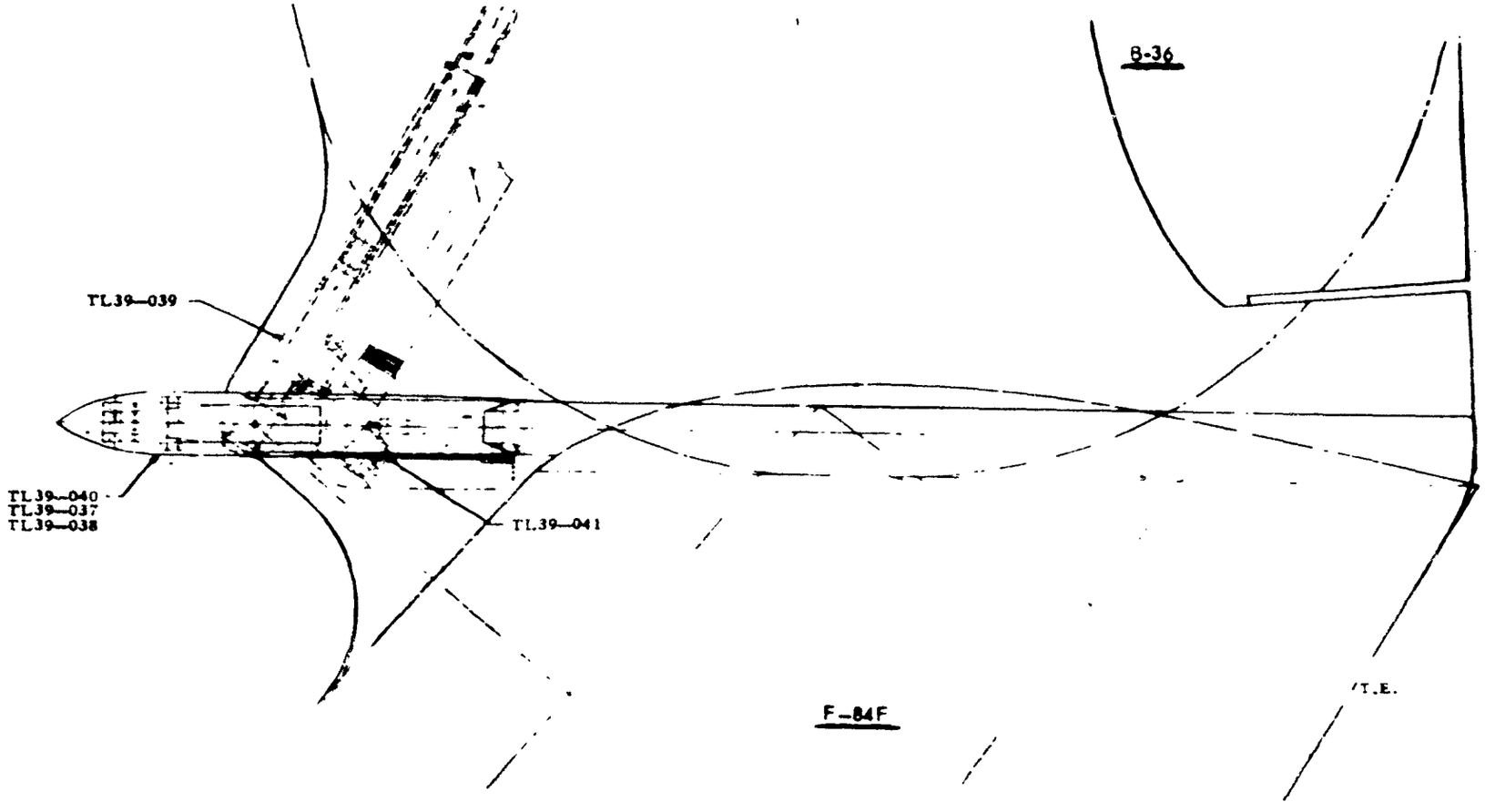


FIGURE 6 - MAST TYPE COUPLING - COUPLED CONDITION

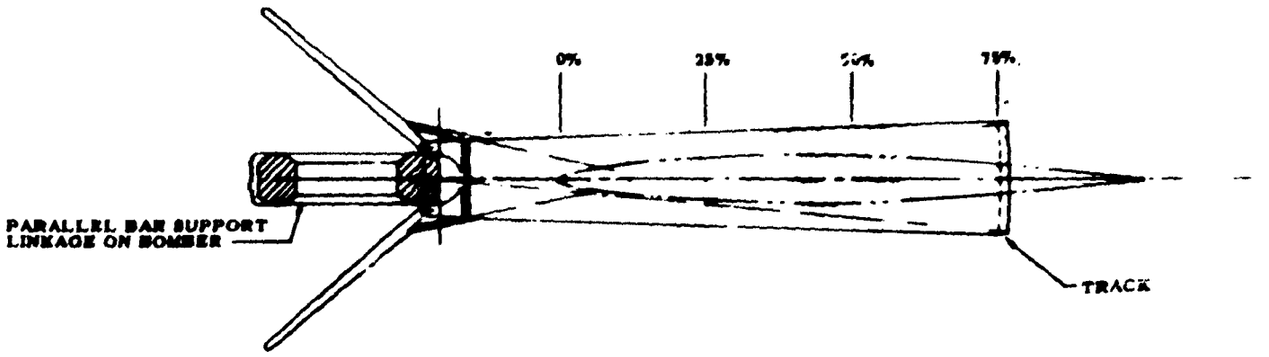


SECTION AA
ROTATED 90°

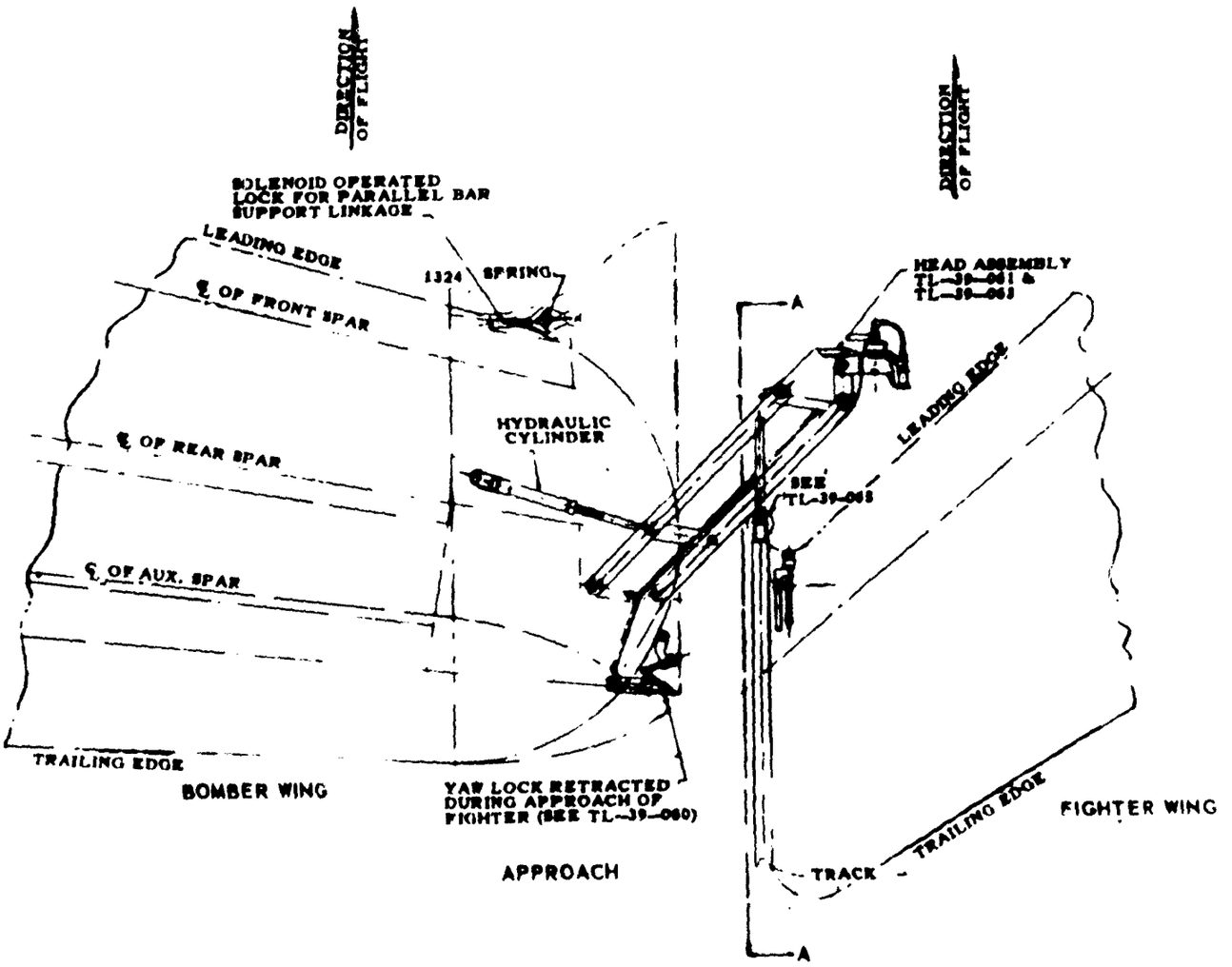


FIGURE 7 - BALL AND SOCKET JOINT COUPLING - APPROACH CONDITION

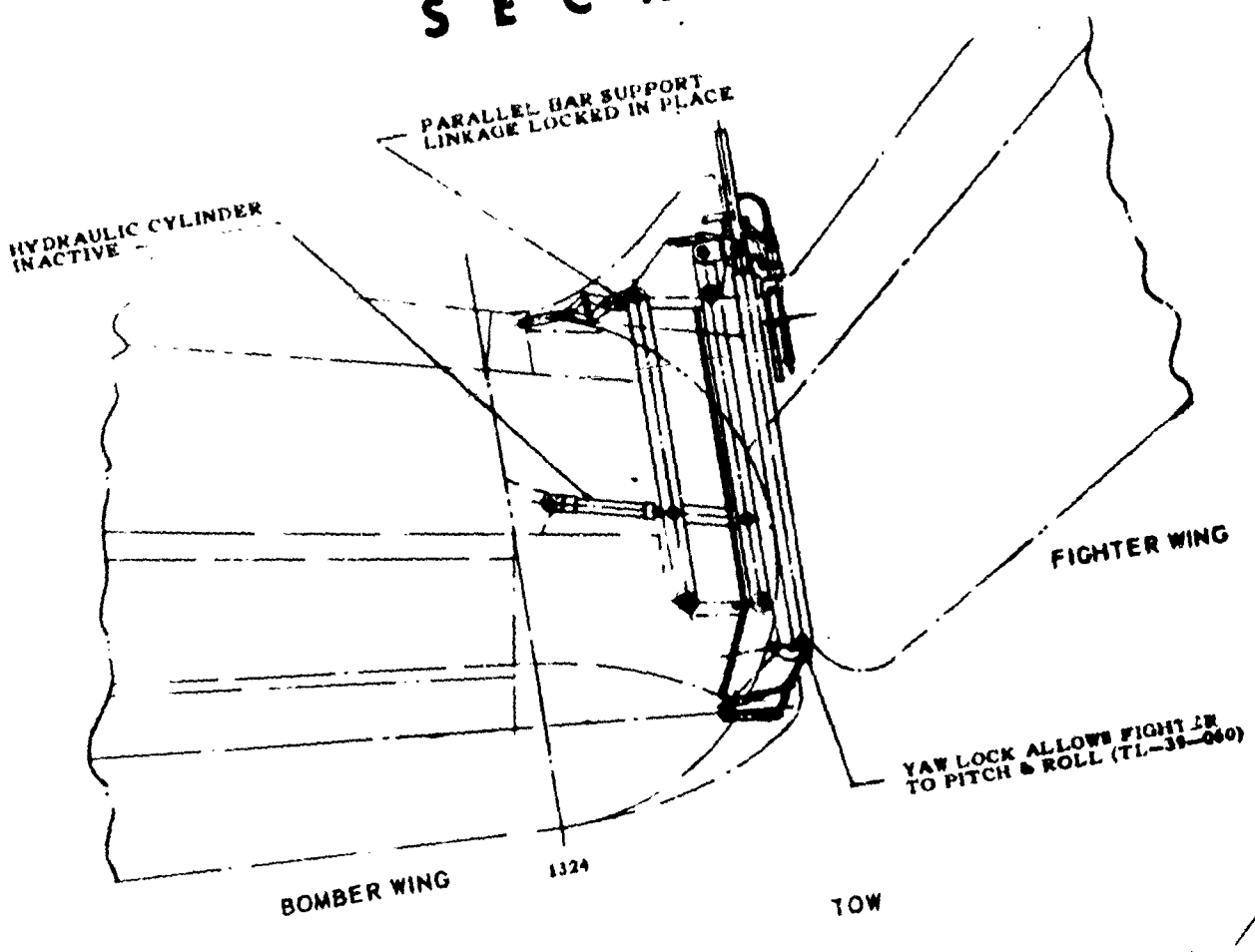


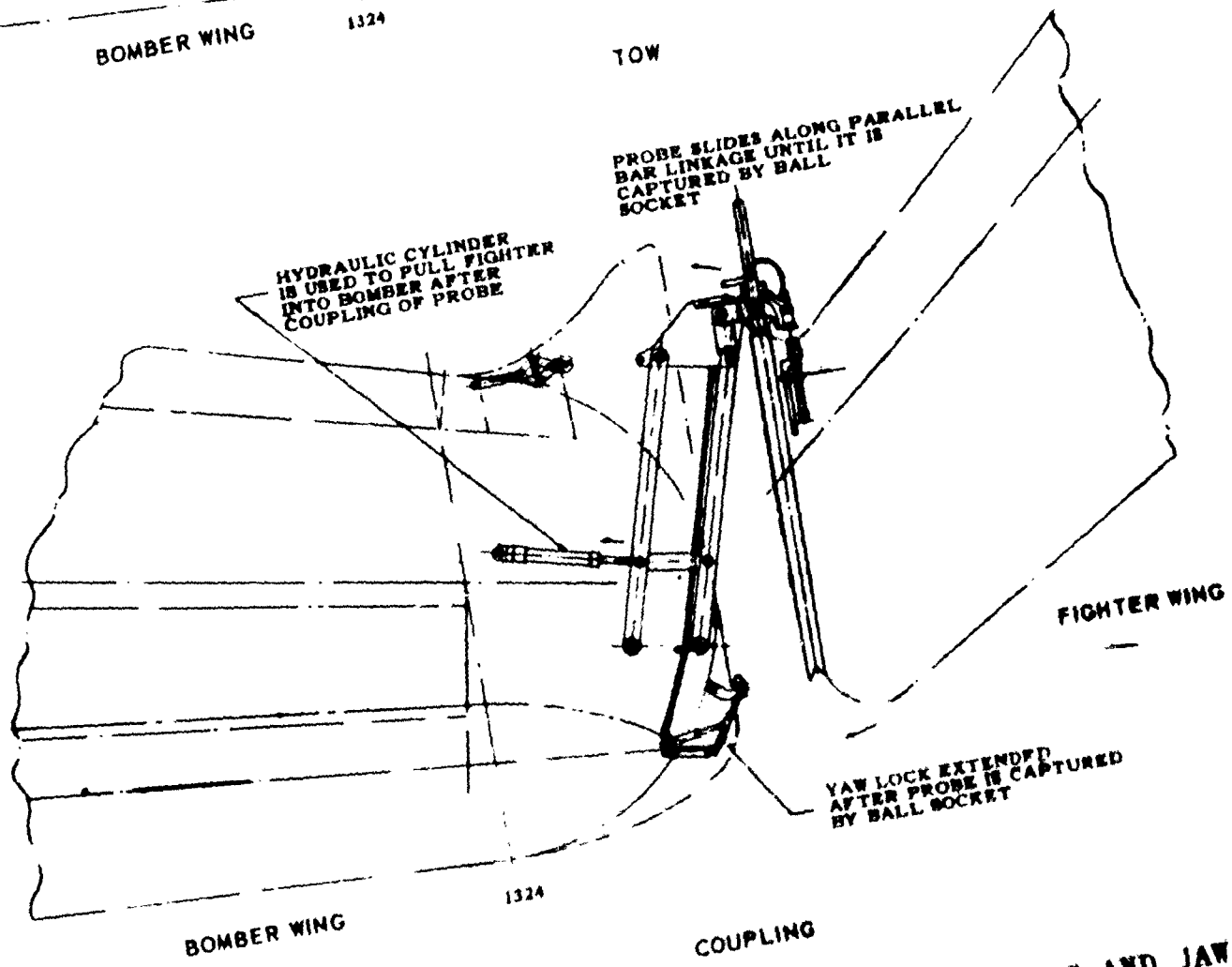


FIGURE 8 - BALL AND SOCKET JOINT COUPLING - COUPLING AND JAW CONDITION

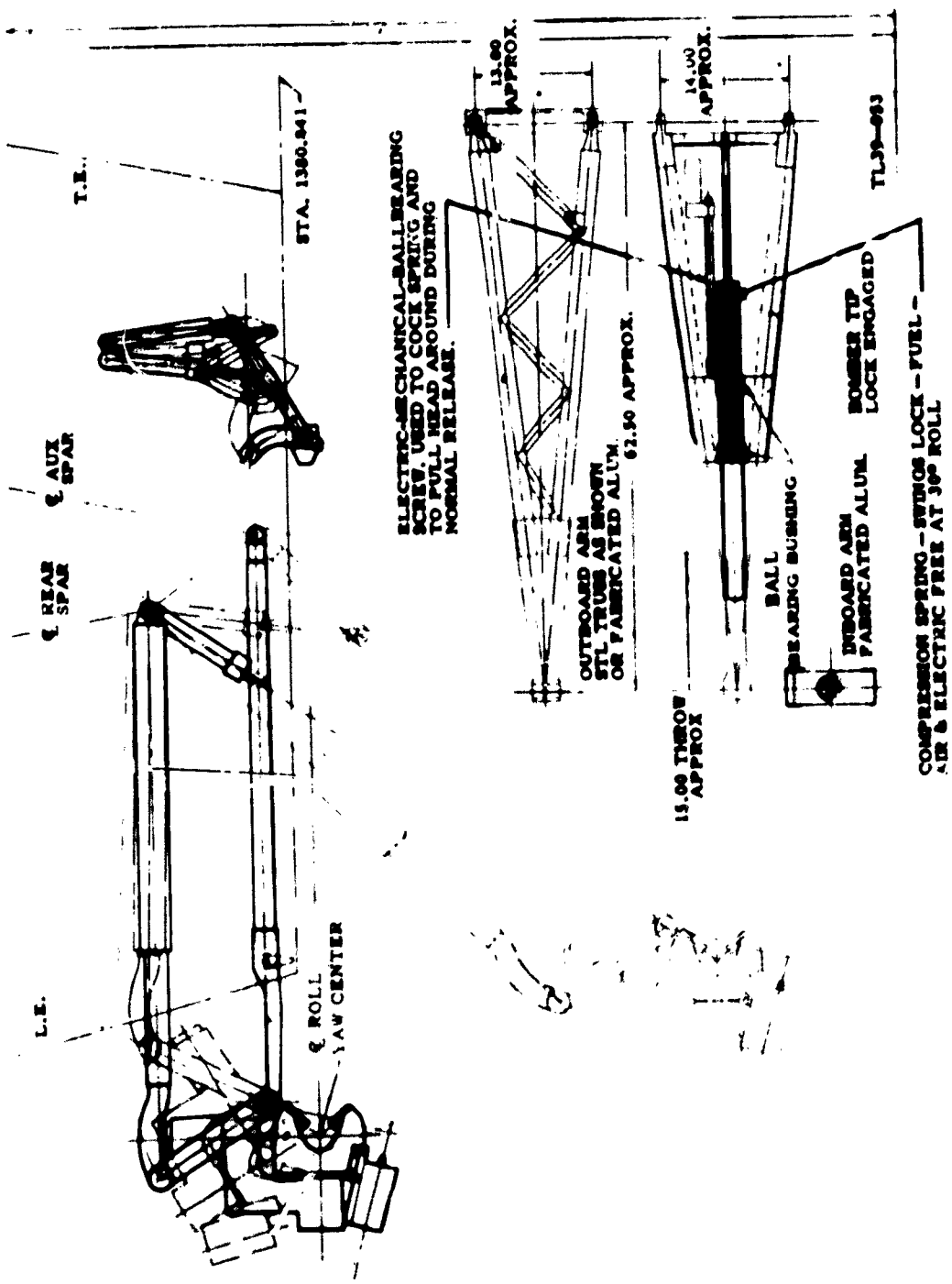


FIGURE 9 - UNIVERSAL JOINT COUPLING - BOMBER MECHANISM

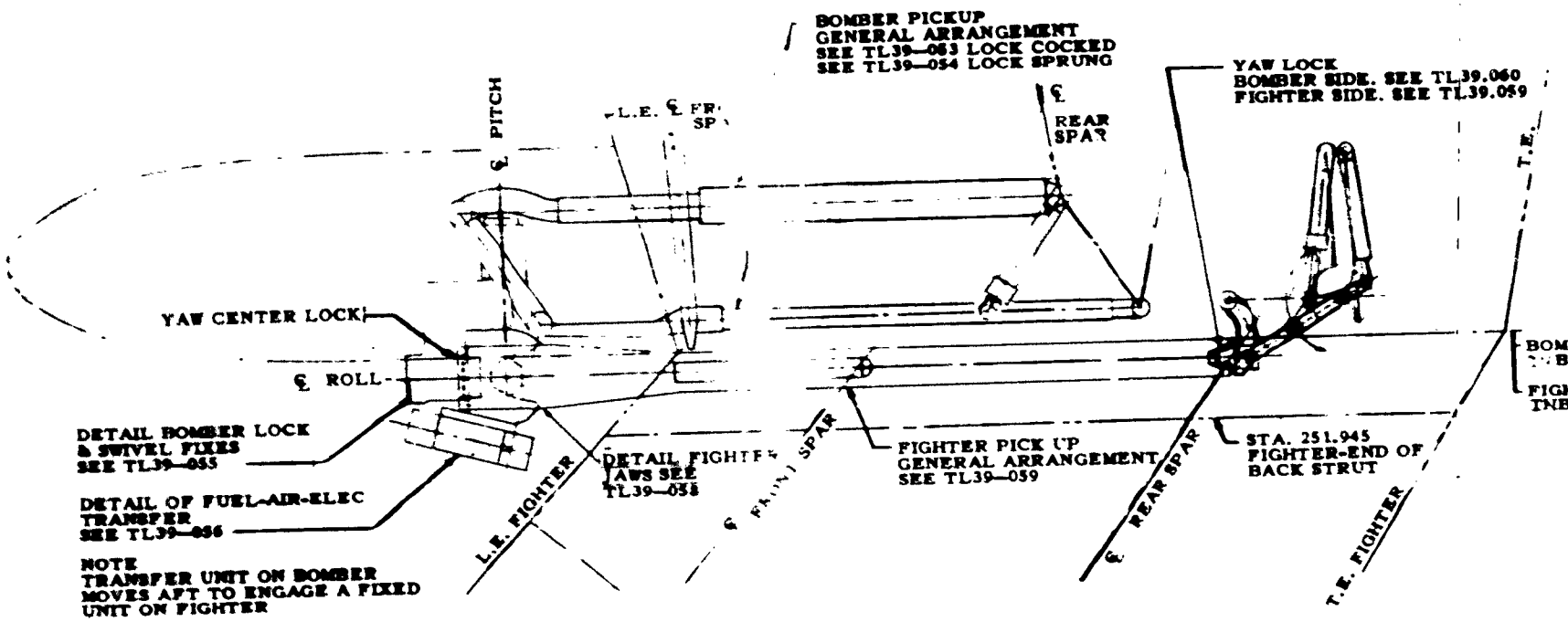


FIGURE 10 UNIVERSAL JOINT COUPLING COUPLED CONDITION

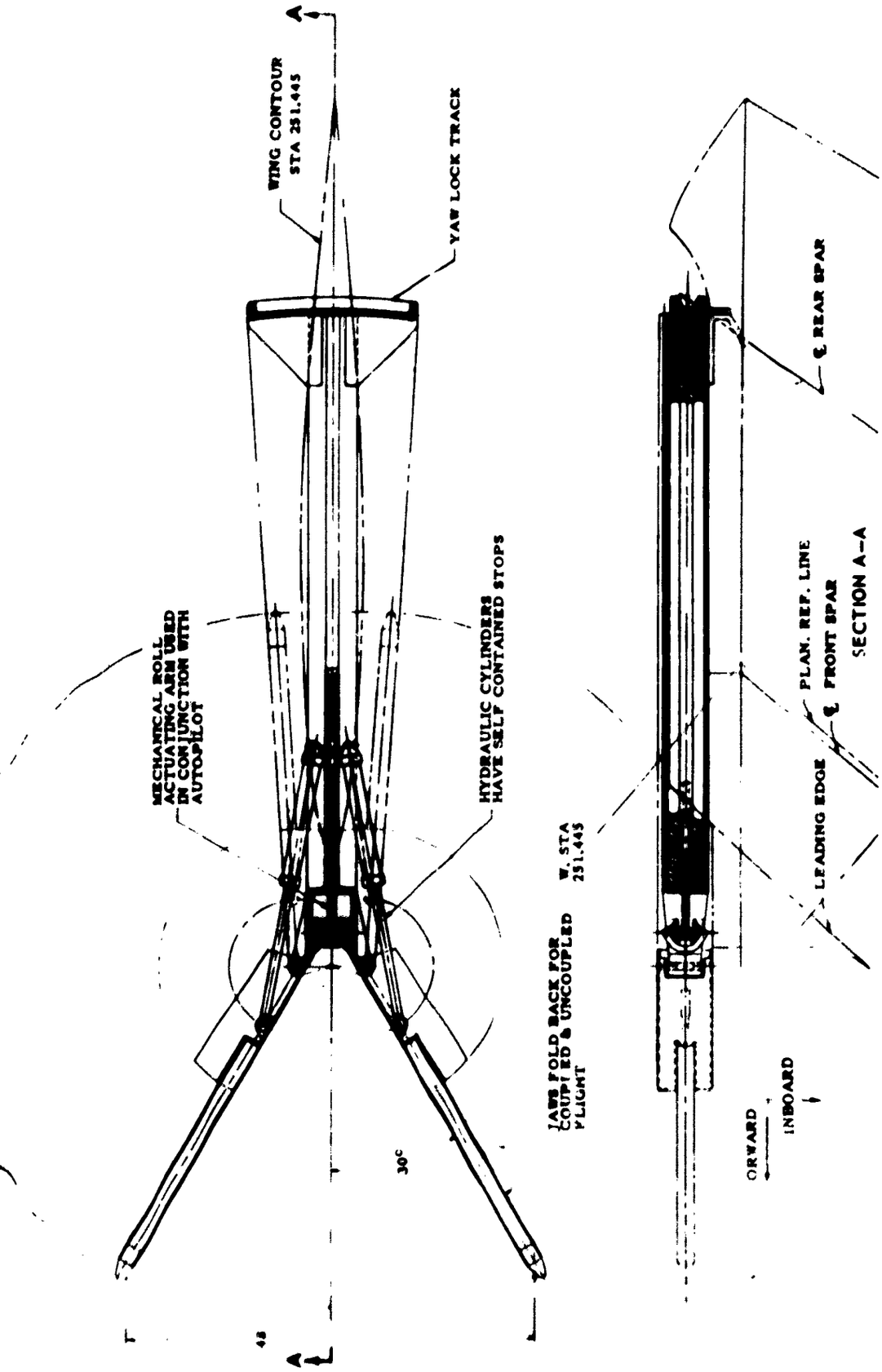


FIGURE 11 - UNIVERSAL JOINT COUPLING - FIGHTER ARRANGEMENT

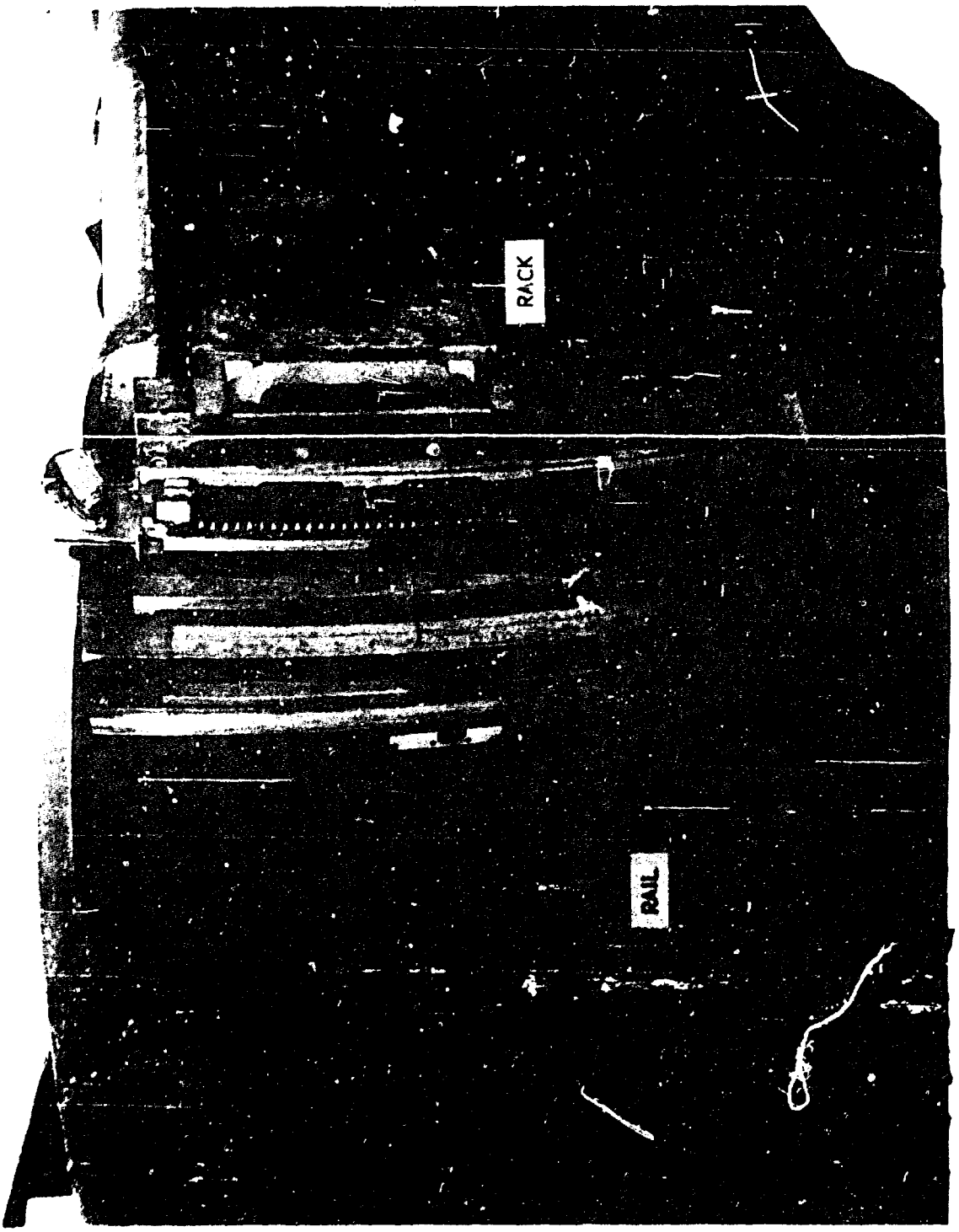


FIGURE 12 RB-36F AFT ATTACHMENT AREA

The design studies had originally been based on a fore-and-aft hinge line. However, fairly early in this portion of the work Convair conducted preliminary investigations based on predicted flexibility characteristics of the B-36, the coupling mechanism, and the RF-84F wing which indicated that a skewed hinge line would provide stability for the fighter without the use of automatic controls. The basic ideas studied by Thieblot Aircraft Company were readily adaptable to the skewed hinge line.

As the result of the design studies by Thieblot on the four configurations of coupling mechanism mentioned above, it was determined that the fourth approach--a universal-joint type design--was the most feasible. The concepts of the parallelogram on the B-36 wing tip to support the universal joint, the vertically opening type jaws attached to the RF-84F wing tip, and a 20-degree skewed hinge line were firmly established as the basic configuration for the coupling mechanism during a conference among WADC, Thiebolt, and Convair in February 1954.

As a result of additional analyses of the skewed hinge line concept, and semi-span wind tunnel tests conducted at the David-Taylor Model Basin, a decision was made in November 1954 to change the skew angle from 20 degrees to 15 degrees.

It was only during the later stages of the design studies that a pitch lock, as well as a yaw lock, was firmly established as being required at the aft attachment. The first design consisted of a "puck" in one face of the wedge of the yaw lock which was forced against the V-track by hydraulic pressure and thereby provided pitch restraint by friction alone. For aerodynamic reasons it was decided to locate the track on the B-36 and the wedge on the RF-84F. However, the wedge-type design proved to be impractical and was abandoned in favor of a T-track design. The final design incorporated gear teeth on the puck and a rack gear on the track to provide a positive pitch lock (rather than depending on friction for locking in the vertical direction). See Figure 12 for a general view of the aft attachment area on the bomber.

In addition, it was determined that a separate utilities connection would be located aft of the rear lock. After further study, bringing the utilities through the forward attach point was considered impractical.

## C. DETAIL DESIGN OF THE COUPLING MECHANISM (REFERENCE 29)

### 1. Forward Lock Mechanism

#### a. RF-84F

The forward lock mechanism on the RF-84F is shown by Figure 13. It consists of a spool vertically oriented at the apex of a pair of vertically opening jaws operated by an electrical screw jack actuator controlled by a switch in the RF-84F cockpit. The spool position relative to the jaws is fixed. The jaws are opened prior to coupling. During coupling the spool forces the B-36 coupling head to roll and pitch into proper alignment for engagement to occur. This spool is the forward lock point and provides the yaw axis for the coupling mechanism.

#### b. B-36

The B-36 forward attach point is shown by Figure 14. Figures 15 and 16 show the fighter coupled to the bomber in single-point attachment in the check-out "tower" .

In Figure 14 the coupling head is shown in a before-coupling position (however, angular relationship between the coupling head and the bomber boom is not correct because certain pieces of the mechanism are missing in this picture). The latching toggles articulate within the head and one can see the space between the latches in which the spool on the fighter probe finally comes to rest. Pressure on the aft faces of the latch toggles causes them to open to receive the spool. Release from the single-point attachment is begun, first, by opening of the latching toggles and, second, by a forward and inboard rotation of the head about the large bolt in the center of Figure 14. The coupling mechanism is retracted into the bomber wing-tip fairing by the boom extend-retract actuator (which can be seen in Figure 16 attaching to the boom at mid-length). The sequence of events prior to coupling is as follows:

(1) The boom is extended from the B-36 wing tip by the boom extend-retract actuator.

(2) The coupling head is rotated forward and outboard about the bolt in the center of Figure 14 to the coupling position.

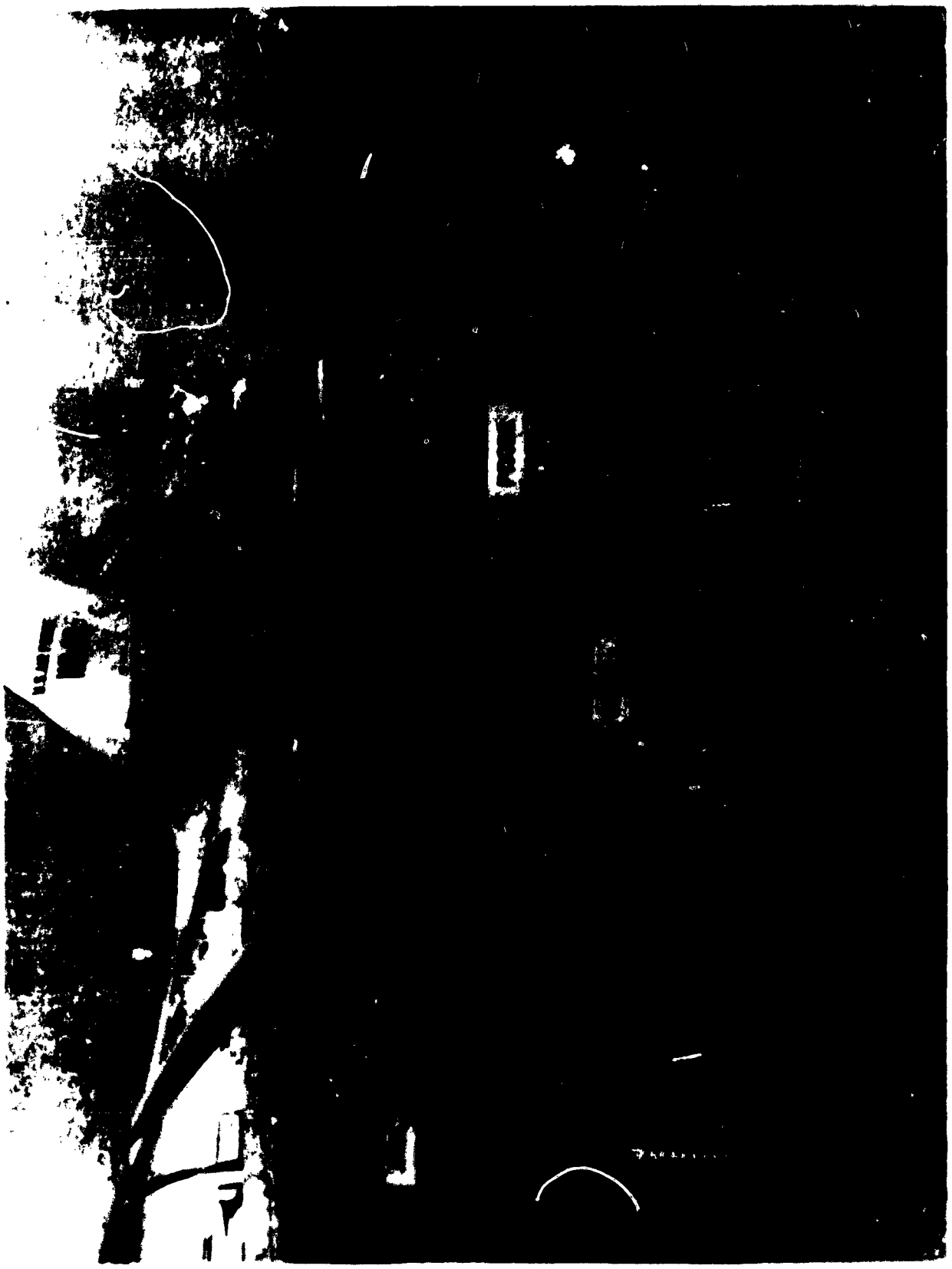

FIGURE 13 RF-84F FORWARD LOCK MECHANISM

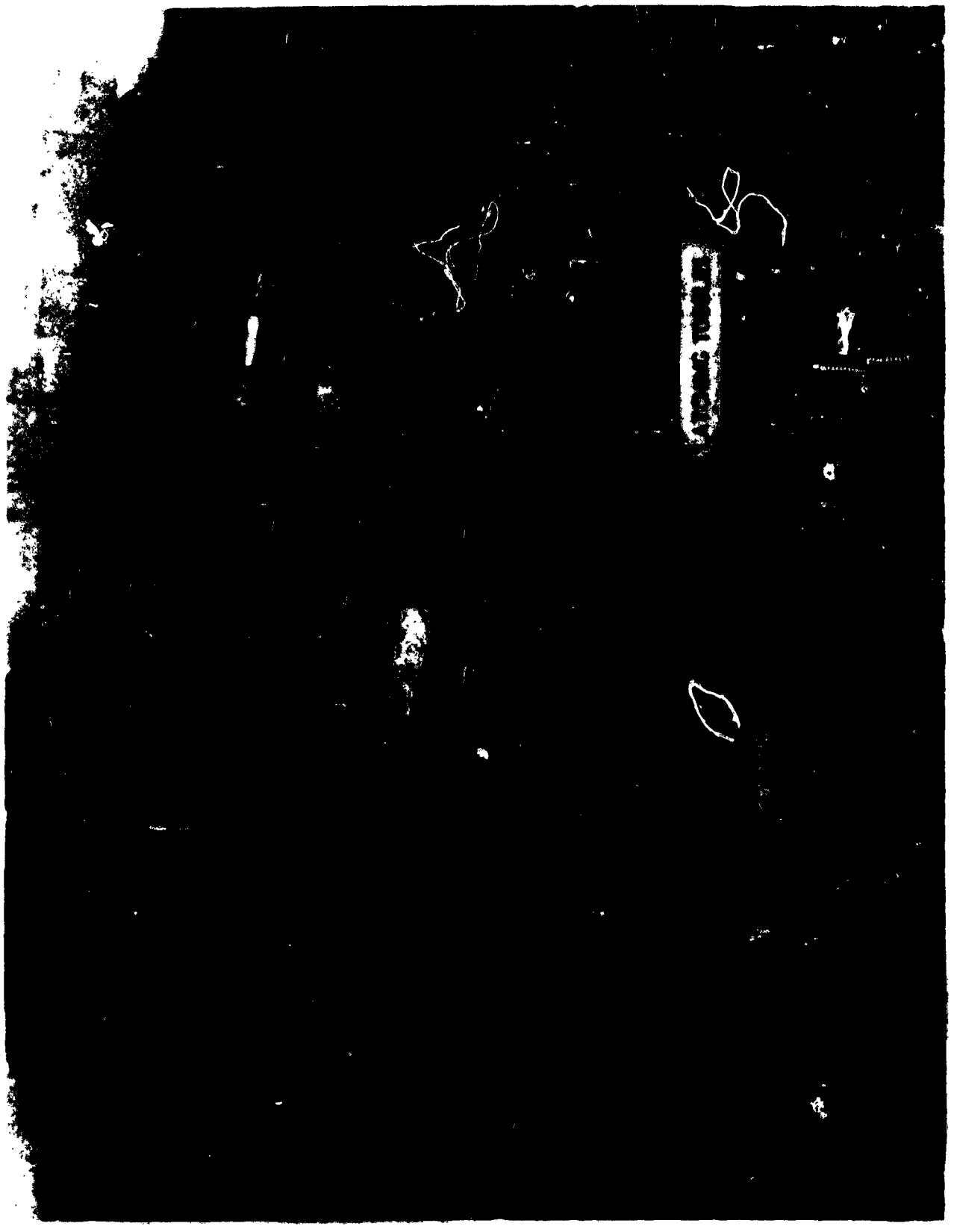

FIGURE 14 RB-36F FORWARD ATTACH POINT

FIGURE 15 LATCHING MECHANISMS PRIOR TO MAKING SINGLE POINT CONTACT

FIGURE 16 LOOKING AFT AT LATCHING MECHANISMS IN SINGLE POINT CONTACT

Both actuators are ball-type screw jack actuators which are controlled from the B-36 aft scanner's position.

The coupling head can rotate about a roll axis (skewed-hinge axis) and about a pitch axis. These two axes intersect at the mid-point of the fighter probe spool forming, in effect, a universal joint at this point.

Retraction of the coupling head is a fast-action motion powered by heavy springs within the large tube at the forward side of the coupling parallelogram (see Figure 14).

The principal structural loads of the coupling mechanism are carried into the B-36 wing through the boom.

2. Aft Lock Mechanism

A. RF-84F

The RF-84F rear lock mechanism is shown by Figure 17. It consists of a yaw lock mechanism and a pitch lock mechanism mounted in a carriage housing. This housing is mounted on two arms and permits rotation about the skewed-hinge axis. Extension and retraction are accomplished by a screw jack actuator, attached between one of the support arms and the wing structure. This actuator is controlled by the same switch in the RF-84F cockpit that controls the probe jaws. Mounted in parallel with the actuator is a powerful spring which supplies the retraction power for the fighter rear lock when it is released either normally or through the automatic roll release. The lock in this mechanism is a single-hook arrangement held in the locked position by a spring-loaded, overcenter, toggle. As the RF-84F swings in to the B-36 at the rear point (during retraction of the forward lock to the coupled flight position) the B-36 track trips the toggle permitting the hook to pass the track. The spring load closes the hook against the inboard base of the T-track and resets the toggle, thus locking the RF-84F in yaw. The surface, bearing against the outboard face of the T-track, contains the hydraulically actuated puck with teeth which mate with the track rack. When hydraulic pressure is applied the puck is extended and engages the track teeth. The RF-84F is then locked in pitch.

FIGURE 17 RF-84F AFT LATCH, SHOWING PITCH LOCK AND YAW LOCK

b. B-36

The rear lock provisions on the B-36 airplane consist of an arc-shaped track, with its center at the forward lock point, which incorporates a rack gear. The rack provides vertical restraint; yaw restraint is provided by the track. Figure 12 shows the installation on the B-36 airplane.

3. Utilities Coupling

The utilities coupling consists of two parts: a block mounted on the RF-84F, and a carriage assembly mounted on the B-36 (see Figure 18 ). The block on the RF-84F contains connections for fuel, air, electrical power, and interphone. It is mounted aft of the rear lock. When the rear lock is engaged the utilities block is held in proper position for mating with the B-36 utilities connection. A limited angular and fore-and-aft freedom is provided.

The carriage assembly mounted on the B-36 has a utilities block that mates with the block on the RF-84F. The carriage assembly block is extended by means of an electrical actuator which is shut off by a limit switch when full engagement with the RF-84F block is reached. A fore-and-aft and vertical alignment wedge, as well as guide pins incorporated in the carriage assembly block, provide for final alignment when a connection is made. A set of springs, which are loaded on making the connection, provides a means for de-coupling at release.

The carriage assembly operates on a track. By means of an electrically-powered actuator and a chain drive, the carriage is raised and lowered through the full vertical travel of the RF-84F rear lock when coupled to the B-36. A coupling on the carriage engages the lock housing on the RF-84F when the carriage comes into alignment with the RF-84F utilities block. A switch on this coupling shuts off the vertical actuator, de-clutches it so that the carriage will be free to follow the travel of the RF-84F when trimmed in pitch, and energizes the actuator that extends the carriage block.

Flexible lines and cables connect the utilities blocks into the airplane systems.

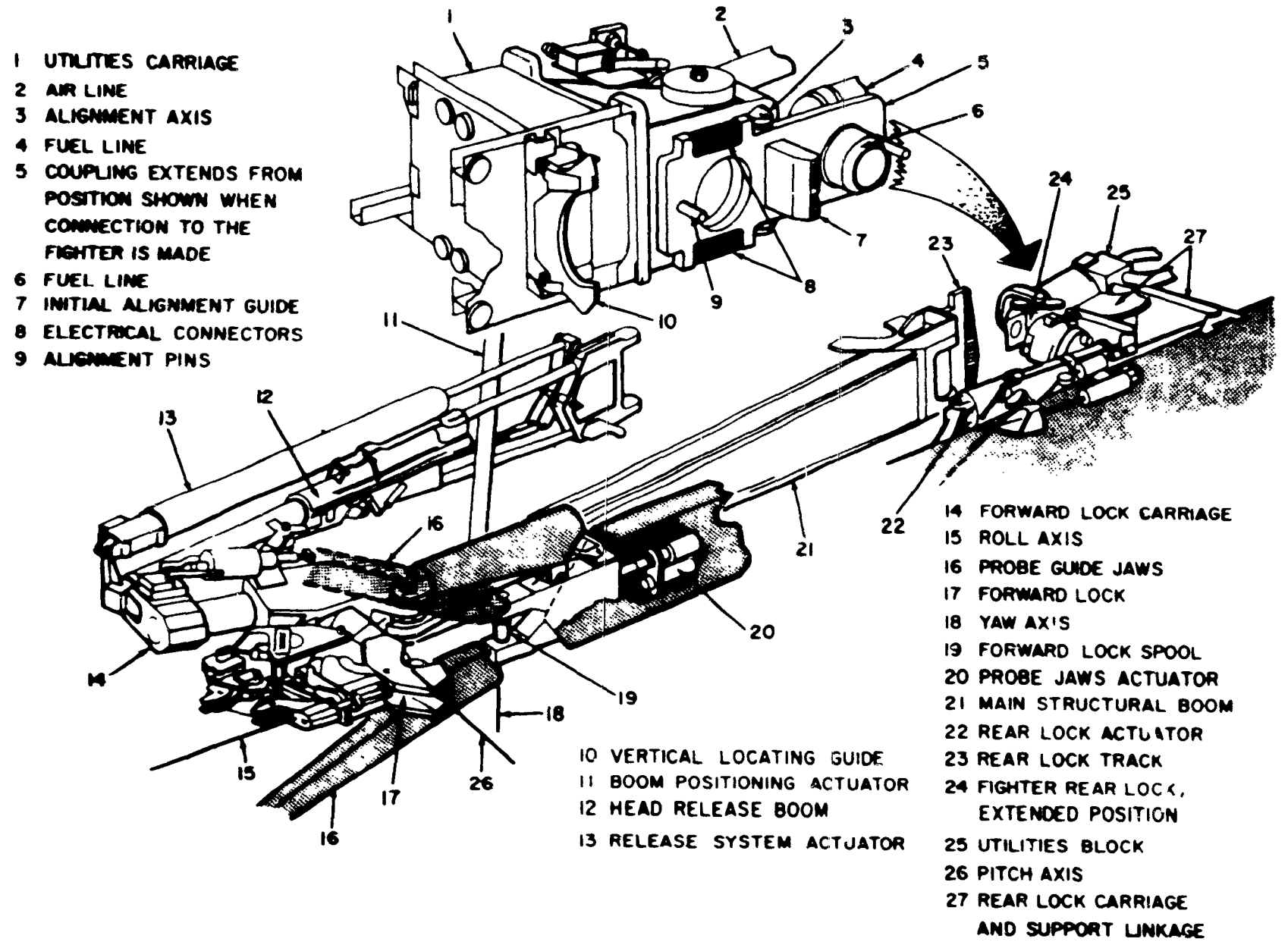


FIGURE . – COUPLING MECHANISM SHOWING UTILITIES CONNECTIONS

Although the utilities couplings were never installed on the Tom-Tom airplanes, ground tests indicated that the design was feasible and needed only refinements to become operational.

4. Release Systems

The release systems received major consideration since safety was of great concern. A total of five methods by which release could be accomplished was incorporated in the design. These were normal release, manual release, and squib release activated from the fighter; electrical release activated from the bomber; and roll release activated automatically. All release systems were designed to be equally operable in either single-point or fully coupled attachment. Release is normally made from the fully coupled position as the single-point position is a transient position only and the RF-84F is dynamically unstable in such a position. The aft lock releases first and is instantaneously followed by release of the forward lock. The total time for complete release is less than 1/2 second. However, Convair made a number of revisions to Thieblot's original design of the mechanism in order to achieve this sequencing and release time.

a. Normal Release (Pneumatic)

Normal release is accomplished by actuating a switch in the fighter cockpit which electrically opens a valve allowing stored pneumatic pressure to extend a piston which, through linkages, causes a plunger in the spool of the RF-84F probe to extend. The extending plunger engages a plunger in the B-36 head and forces it forward to trigger a spring loaded over-center mechanism which provides force to disengage the clutch on the head reset actuator. The head reset actuator, being spring loaded to retract, then starts to retract. The actuator motion drives the aft lock tripper rail out to trigger the aft lock release mechanism on the RF-84F. This disengages a set of dogs which in turn disengages the clutch on the lock-roll housing extend actuator; this allows the spring loaded mechanism to unlock the yaw lock and retract the mechanism to provide a clear path for separation at the aft attach point. The actuator motion which drives the aft lock tripper rail out to trigger the aft lock release mechanism on the RF-84F also applies force to a cable

which opens the forward latches in the bomber head and disengages a set of dogs allowing the head positioning boom to compress. This causes the head to retract and provide a clear path for separation at the forward attach point.

b. Manual Release

Manual release is identical to the normal release system except that the plunger in the fighter probe spool is extended by a cable-conduit control mechanically linked to a control handle in the RF-84F cockpit.

c. Squib Release

An emergency release is provided and consists of three squibs: two located in the forward spool and one in the fighter rear lock system. The two squibs in the forward spool disengage the spool retaining pins. The squib in the rear lock system releases a spring-loaded cartridge which trips the aft release system. The three squibs are fired simultaneously by the RF-84F pilot. A fourth squib would be required if the utilities systems were installed on the airplanes.

d. Electrical Release from the B-36

The intent of the original Thieblot design was to release the RF-84F by retracting the B-36 head reset actuator electrically. Retraction of the head reset actuator starts to open the forward latches and triggers the aft release mechanism on the RF-84F so that the remainder of the release sequence, although somewhat slower, is the same as for a normal release. In practice this did not prove to be entirely satisfactory. The retraction of the head reset actuator opened the forward latches but did not actuate the RF-84F aft release mechanism through its complete release sequence. During flight tests several releases were made with this system. However, this was accomplished by reducing power on the RF-84F after the forward latches opened so that the RF-84F could slide aft off the rear B-36 track.

e. Automatic Roll Release

As stated earlier in this report, a basic design requirement was that release would occur at a preset angle of roll. The automatic roll release was designed to operate from the roll axis of the forward trunnion and, after revisions by Convair during fabrication and installation, was made adjustable between angles of ∠10 degrees and ∠30 degrees. Upon reaching the preset roll angle, the release cycle is set in motion by triggering the overcenter mechanism discussed in the description of the normal release. The release sequence is the same from that point on.

f. Reset Sequence After Release (Except for Squib Release)

The B-36 latch mechanism is reset by operating a switch on the operator's panel at the aft scanner's position. This switch energizes the head reset actuator which extends the actuator and thus extends the head, retracts the aft tripper rail, and re-engages the locking dogs.

The RF-84F aft lock mechanism is reset by operating a switch in the RF-84F cockpit which energizes the clutch reset solenoid on the actuator and energizes the actuator to extend position.

D. STRUCTURAL MODIFICATIONS (REFERENCE 29)

1. RF-84F Wing Structural Modifications

Considerable structural modification of the RF-84F wing was necessary for installation of the wing-tip coupling mechanism. The forward lock point being forward of the leading edge of the wing required a probe structure to support the guide jaws and lock mechanism (see Figure 19). The probe has a vertical tie to the RF-84F front spar and the vertical component of applied loads is reacted there. The couple loads are carried into the wing by the probe top and bottom chords attaching to the upper and under portions of the wing.

The closing rib of the wing and adjacent wing structure were redesigned to take the rear lock point loads. A fairing was provided to cover the rear lock mechanism.

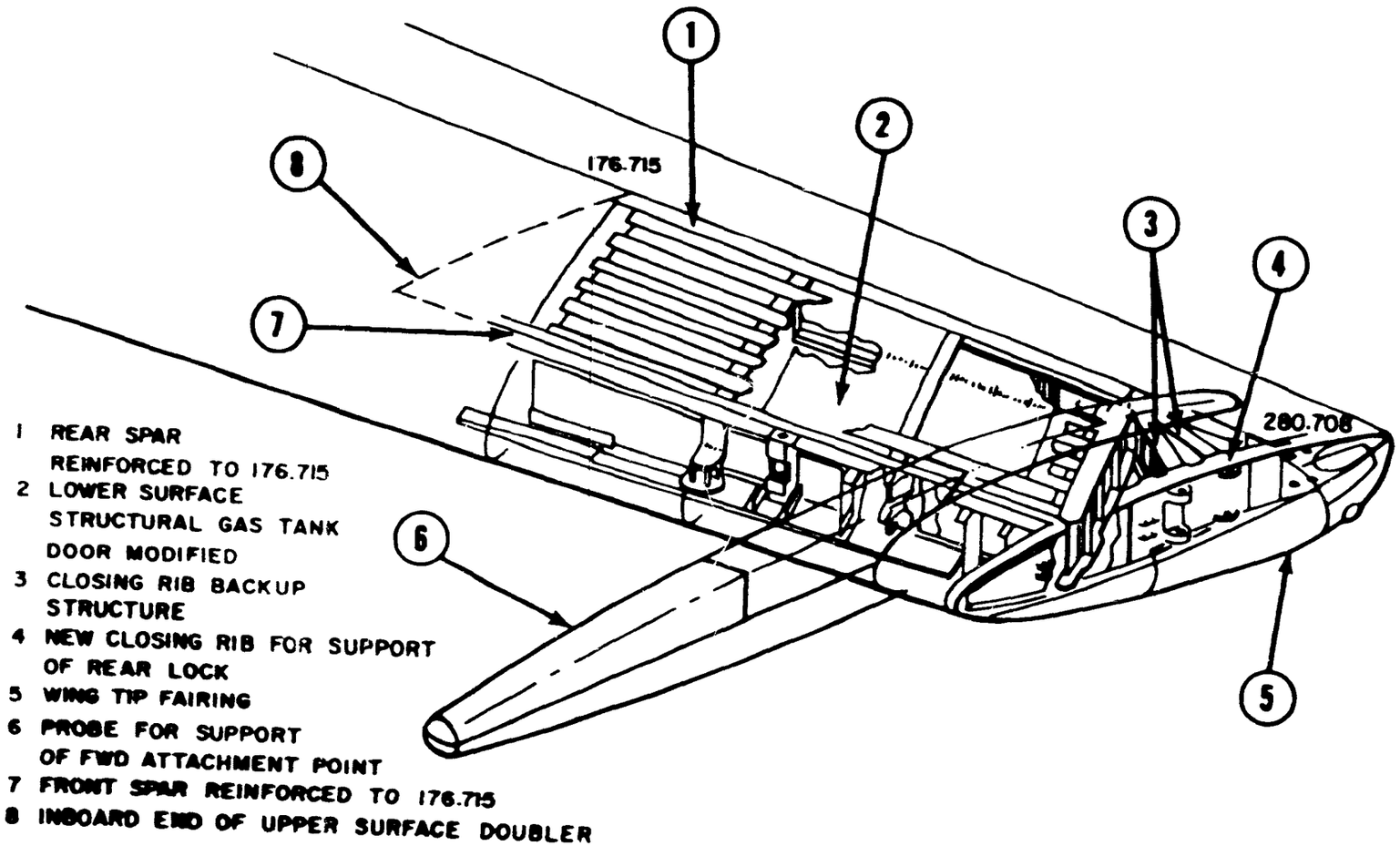


FIGURE 19 – RF-84F WING STRUCTURAL MODIFICATION

2. B-36 Wing Structural Modification

Quite extensive structural modifications were made to the B-36 wing outer panel. (See Figure 20). Studies conducted early in the program showed that the flexibility characteristics of the B-36 wing would be one of the major considerations in the stability of the coupled aircraft configuration. These characteristics largely determined the location of the coupling mechanism in relation to the wing torque box. A new spar was added between the aft attachment fitting of the coupling mechanism inboard through the trailing edge to wing Bulkhead 38 (Station 1278).

This spar and covering plate stringer material furnished additional strength but was added, primarily, to increase torsional rigidity.

The B-36 wing tip was completely rebuilt to provide for attachment of the coupling mechanism. Additional modifications to the front and rear spars, upper and lower skin surfaces and stringers, leading edge, trailing edge, and aileron were made. New bulkhead assemblies replaced the original Bulkheads No. 38, 39, 40, 41, 42, and a closing bulkhead (No. 43) was incorporated. These were major load-carrying members. Inboard of Station 1278, the bulkheads were reinforced with the amount decreasing to a minimum at wing Bulkhead 25 1/2 (Station 855). A wing-tip fairing to cover the coupling mechanism was added.

E. DESIGN MODIFICATIONS OF THE COUPLING MECHANISM

1. Coupling Mechanism Changes Required During Fabrication and Installation

a. Redesign of the RF-84F roll housing so that machining operations could be performed and to eliminate interferences.

b. Redesign of the roll-release mechanism to provide a more positive action and to incorporate means for adjusting roll-release angles.

c. Incorporation of a squib release for the aft latch consisting of a spring-loaded cartridge actuated by firing a squib.

d. Replacement of cadmium-plated steel bushings with high-strength bronze bushing for rotating bearing surfaces.

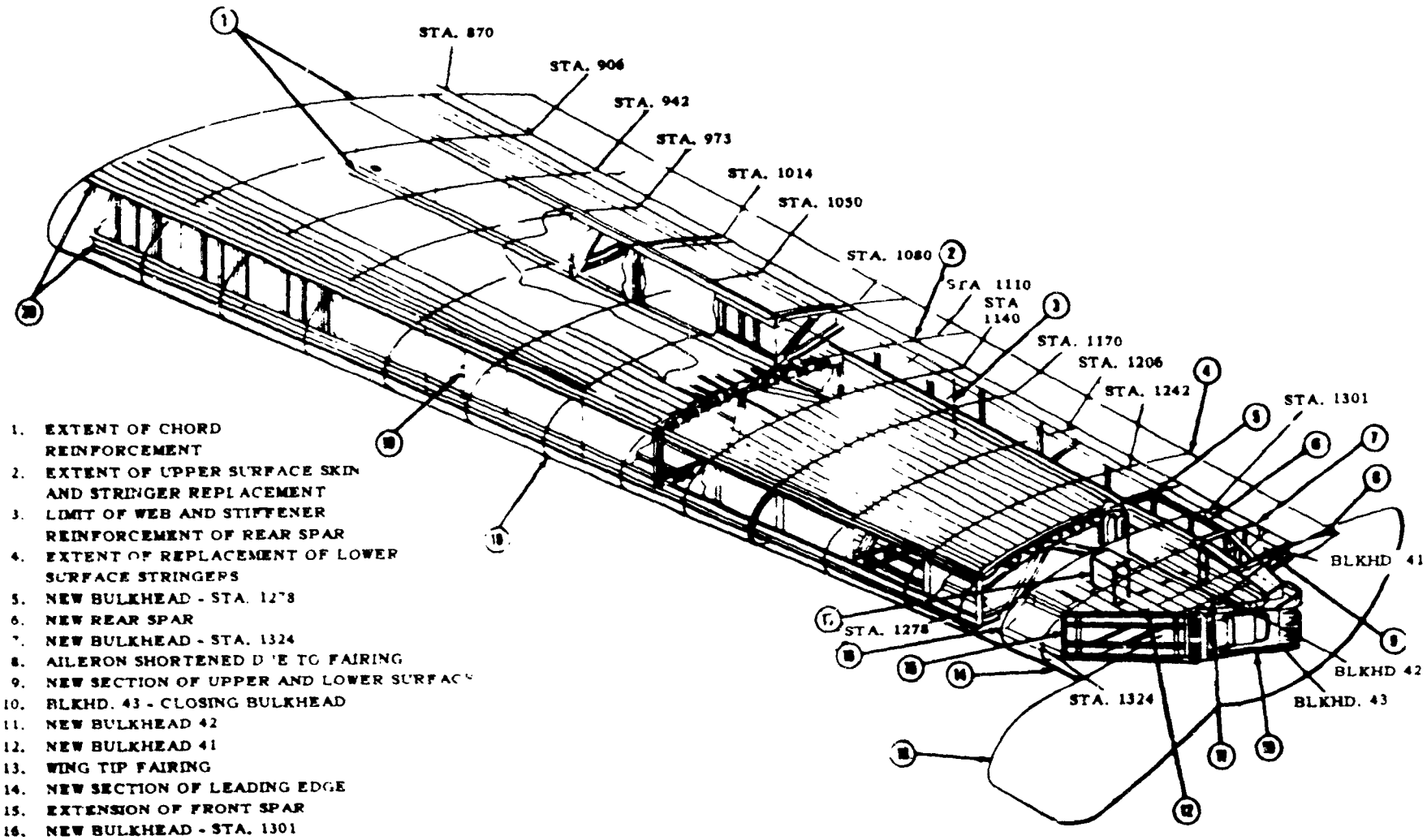


1. EXTENT OF CHORD REINFORCEMENT
2. EXTENT OF UPPER SURFACE SKIN AND STRINGER REPLACEMENT
3. LIMIT OF WEB AND STIFFENER REINFORCEMENT OF REAR SPAR
4. EXTENT OF REPLACEMENT OF LOWER SURFACE STRINGERS
5. NEW BULKHEAD - STA. 1278
6. NEW REAR SPAR
7. NEW BULKHEAD - STA. 1324
8. AILERON SHORTENED DUE TO FAIRING
9. NEW SECTION OF UPPER AND LOWER SURFACE
10. BLKHD. 43 - CLOSING BULKHEAD
11. NEW BULKHEAD 42
12. NEW BULKHEAD 41
13. WING TIP FAIRING
14. NEW SECTION OF LEADING EDGE
15. EXTENSION OF FRONT SPAR
16. NEW BULKHEAD - STA. 1301
17. SUPPORTING STRUCTURE OF BOOM POSITIONING ACTUATOR
18. EXTENT OF LOWER SURFACE SKIN REPLACEMENT
19. LIMIT OF WEB AND STIFFENER REINFORCEMENT OF FRONT SPAR
20. EXTENT OF CHORD REINFORCEMENT

FIGURE 20 – B-36 WING STRUCTURAL MODIFICATION

Many of the cadimum plated bearings had been fabricated and installed before this discrepancy was noted. In these cases the bearings were replaced during the ground test and flight test program as galling occurred.

e. Numerous other discrepancies in fit were found during assembly of the coupling mechanism. These discrepancies consisted of interferences due to motion and inadequate provisions for clearances in rotating joints. It appeared that accumulative tolerances had not been taken into account during design of the mechanism.

2. Coupling Mechanism Changes Required as the Result of Functional Ground Tests

a. Relocation of RF-84F aft latch release lever to overcome interference with the B-36 aft rack and track.

b. Sharp corners of the B-36 aft latch rack were rounded to prevent scoring of the RF-84F latch release levers.

c. The RF-84F aft lock inner housing was reworked to eliminate interference with the B-36 track.

d. Redesign of the RF-84F yaw lock switch linkage to obtain satisfactory operation of the limit switch and to eliminate interference with the B-36 track.

e. Redesign of the B-36 aft lock flag mechanism linkage so that it would actuate the limit switch and go to the "full up" position.

f. The size of the RF-84F fairing was increased and repaired to give adequate space for wiring harnesses, fuel lines, and air lines.

g. The RF-84F aft latch release roll pins failed during operation and were replaced with solid drive pins. This led to a replacement of roll pins with solid drive pins at all other high-load points in the mechanism.

h. The B-36 forward latch flag mechanism was completely redesigned to eliminate interference with the toggle action of the forward latch which had prevented operation of the flag. The redesigned mechanism operated satisfactorily during ground tests, but air loads during flight tests

caused binding in the flag pivot. Termination of flight testing prevented this discrepancy from being completely eliminated.

i. The B-36 fairing lower surface was cut-out and repaired to eliminate interference with the head reset actuator.

j. The force required to operate the RF-84F manual release was too high. This was overcome by increasing the mechanical advantage of the linkage and rerouting of the cable. The release handle was also relocated to a more accessible position.

k. A plate was added to the arm of the pneumatic release arm to insure actuation of the plunger through the spool of the RF-84F forward attach point.

l. A "momentary on" type switch was added in the RF-84F cockpit for retraction of the RF-84F yaw lock without closing the probe.

m. Radii were added to the edges of the B-36 forward latch head to overcome scoring of the RF-84F probe during initial contact.

n. Tapped holes were added to the RF-84F probe spool squib plugs so that a bolt could be used as an extractor to remove the squib plugs after firing the squibs.

o. A larger spring cartridge with stronger springs was installed to increase the spring force so that the RF-84F aft latch mechanism would release and retract when under load.

p. The linkage to the aft latch tripper rail on the B-36 was revised so that it would reduce the time lag between release of the forward latch and the aft latch.

q. An external spring cartridge was added in parallel with the head reset actuator of the B-36 to increase the unlatching cycle spring loads and thereby reduce the release time. The initial spring load was an integral part of the actuator and could not be changed at this facility. Recorded and calculated release times showed that with a roll rate of 25 degrees/second and the roll release set at 16 degrees the fighter could roll to 36 degrees before delay in release would allow the fighter to be freed.

r. The RF-84F aft latch extend and retract actuator clutch reset mechanism was changed from mechanical to electrical operation. Several fixes were tried on the mechanical reset mechanism to obtain desired reliability without any degree of success.

s. Installation of a microswitch in the RF-84F aft latch electrical circuit to indicate engagement of the puck. The RF-84F "chatter" lock trim indicator switch functioned whether the puck was engaged or not and, therefore, was not reliable for the pilot to determine correct trim of the RF-84F.

t. Relocation of the B-36 aft cabin operator's control panel so that the fighter airplane would be visible to the operator while at his station.

u. Several other minor changes were made that did not require design changes.

3. Coupling Mechanism Changes Required as the Result of Flight Testing

a. Beef-up of the RF-84F upper and lower probe jaws was accomplished by the addition of doublers. Failure of these jaws occurred during an attempted contact. Calculations from strain gage data during contact showed that loads were higher than anticipated.

b. Stronger springs were installed in the B-36 receiver pitch positioning cartridge and a cantilever spring was added to prevent the receiver head from failing to reposition from a nose-down position because of aerodynamic loads. The cantilever spring was made effective to counteract the nose-down tendency. The head was positioned in a 5-degree nose-up attitude as a neutral position in order to approximate the relative angle of attack of the two airplanes.

c. Revisions to the B-36 receiver head roll-release were made to prevent roll release from occurring during attempted contacts. Heavier roll-centering springs were installed in the B-36 receiver head so that the head would rotate but not cause release until the spool of the RF-84F probe was engaged in the receiver. However, this proved unsatisifactory because on attempted contact the fighter probe would

cause the head to rotate and the spool would tend to lodge in the space left between the rotated head and the boom. The roll release was, therefore, returned to its original configuration and a head roll lock was added. This allowed the head approximately ± 3 degrees of freedom to align with the fighter spool. The neutral roll position of the head was set so that the fighter spool would be aligned with the receiver head in flight. The fighter could now contact the head and slide into the latches.

d. Revisions were made to the B-36 boom guide rail to overcome the tendency for the RF-84F probe spool to overshoot the receiver opening in the head. The guide rail was recontoured just before entrance into the receiver head. However, this change proved unsatisfactory because this made the angle between the direction of the RF-84F movement and the face of the boom too great and resulted in too much resistance. Therefore, the guide rail was removed, steel rub strips were added to the contact corners of the boom, the gap between the receiver head and the boom was closed with a spacer and "horns" were added to the head to increase the target area (see Figure 21). It was now possible for the fighter probe to enter directly into the receiver head and achieve single-point coupling. However, pilot skill required to achieve coupling was excessive. Very calm air was still a requirement. It was still utterly impossible for the fighter probe to contact the bomber boom and slide into the locked position. The practical target area was approximately eight inches wide and eight inches high.

F. RECOMMENDED COUPLING MECHANISM DESIGN CHANGES FOR FUTURE CONSIDERATION

(NOTE: The first and most obvious recommendation would be to completely re-design the entire coupling mechanisms on both aircraft to achieve greater simplicity, reliability, and positiveness of action. Convair found it necessary to make numerable revisions to make the originally designed mechanisms operable. The mechanisms as originally designed, while not without merit in the over-all scheme, were extremely cumbersome, unreliable, and impractical. This was felt to be largely true because of inadequate design craftsmanship, experience, knowledge, foresight, and attention to details on the part of the designers. The following paragraphs indicate changes believed to be required to achieve maximum improvement in the systems as basically designed but do not necessarily represent Convair's recommendations for a tactical and operational design. For a critique of the over-all project see page 147.

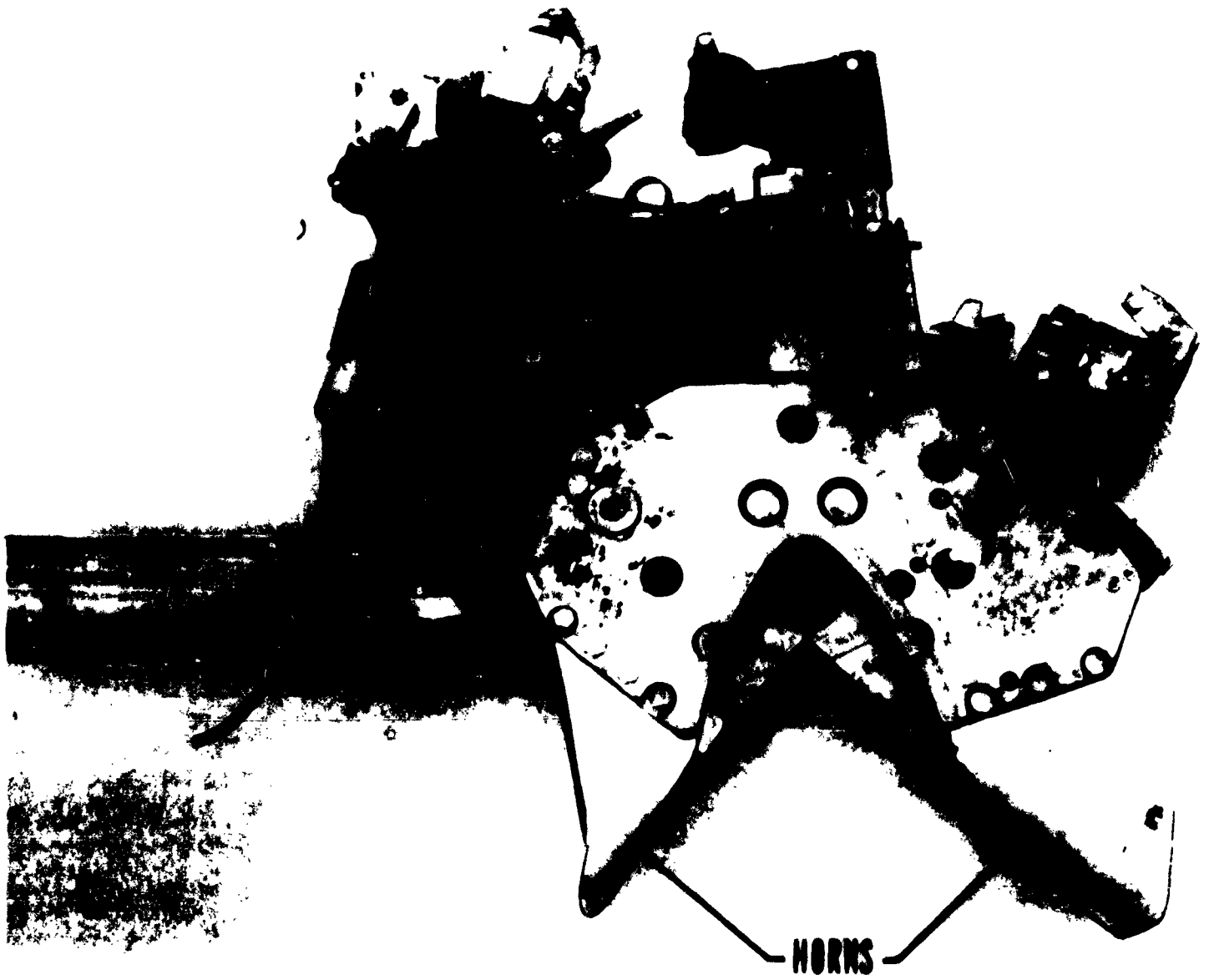


FIGURE 21 VIEW OF HEAD SHOWING HORNS ADDED

1. Refinement and Increased Capacity of the B-36 Receiver-Head Reset Actuator and B-36 Boom Extend-Retract Actuator

These two actuators and the fighter aft latch point extend actuator were sources of continuous trouble during the flight test program due to failures and malfunctions requiring replacements and frequent adjustments. Five of the nine actuators needed for the program were in various stages of repair at one time. The design requirements of the boom extend-retract actuator were fundamentally contradictory since the clutch was required to slip to absorb energy when the fighter contacted in single point and yet not slip when retracting the boom to the two-point position.

2. Increased Target Area for Fighter to Accomplish Approach and Single-Point Attachment

The patience and precision-flying required of the fighter pilot in making an approach and single-point attachment was much, much, too exacting for tactical operation. Although "horns" were added to the B-36 receiver head to increase the horizontal component of the target, it is still inadequate as a target - vertically as well as horizontally.

3. Increased Freedom in Yaw for Single-Point Attachment

The small degree of freedom in yaw which existed in this design was felt to be one of the contributing factors to the incident of the last test flight (No. 18). Yawing resulted in binding of the latches such that release from the yawed position was impossible. If further flight testing were to be done with the present coupling mechanism, a temporary fix to give satisfactory freedom in yaw could be accomplished by cutting back the fighter probe head to give greater yaw clearance. However, this would require that the jaws be fixed in the open position which, while not affecting the coupled configuration, would add considerably to the fighter drag in free flight.

4. Maintainability of the Coupling Mechanism Should be Improved by at Least the Two Following Means:

a. Addition of a means of lubricating bearings and sliding joints.

b. Reduction in the number of adjustments that must be made.

5. Simplicity in Design of the Coupling Mechanism

The coupling mechanism consisted of such a complicated number of parts that it was virtually impossible to prevent malfunctioning of the mechanism. This contributed extensively to the difficulties encountered in making attachments and releases of the fighter in flight.

UTILITIES SYSTEMS DESIGN (REFERENCE 2[illegible])

The basic requirement under this program was for a fully [illegible]rational system for coupled flight. To provide such a system, [illegible] was necessary to modify the existing utilities systems of both [illegible]craft to tie in with the utilities connection previously discussed. [illegible]ever, because of the depletion of funds and the desire to obtain [illegible] much information as possible on the flight characteristics of the [illegible]-Tom system, the requirements for the utilities were cancelled [illegible]ing the flight test program. In the interim the design for the [illegible]lities system had essentially been completed and some of the [illegible]ifications for incorporation of these systems in the B-36 and [illegible]84F had been made. The following is a brief description of the [illegible]lities system design.

1. Heating, Ventilation and Pressurization System

Since the RF-84F engine is shut down during coupled flight, heating, ventilation, and pressurization of the RF-84F must be provided by the B-36. Figure 22 is a schematic diagram of the system developed for this purpose. Bleed air is taken from the B-36 outboard engine turbosupercharger, passed through a heater in the B-36 wing tip, and fed into the RF-84F cabin air conditioning system. Cooling is provided by the RF-84F cooling system. To provide air pressure for the canopy seal, normally supplied from the RF-84F engine, pressure is taken from the RF-84F camera air bottle during the time the engine is shut down.

2. Fuel Transfer System

A fuel transfer system for both refueling and defueling the RF-84F during coupled flight was one of the basic requirements. Figure 23 is a schematic diagram for the RF-84F fuel transfer system. The fuel transfer system in the B-36 is a modified version of the Ficon refueling system which used the Ficon bomb bay fuel tank. Valves and fuel lines were revised to provide fuel flow to the B-36 wing tip utilities connection.

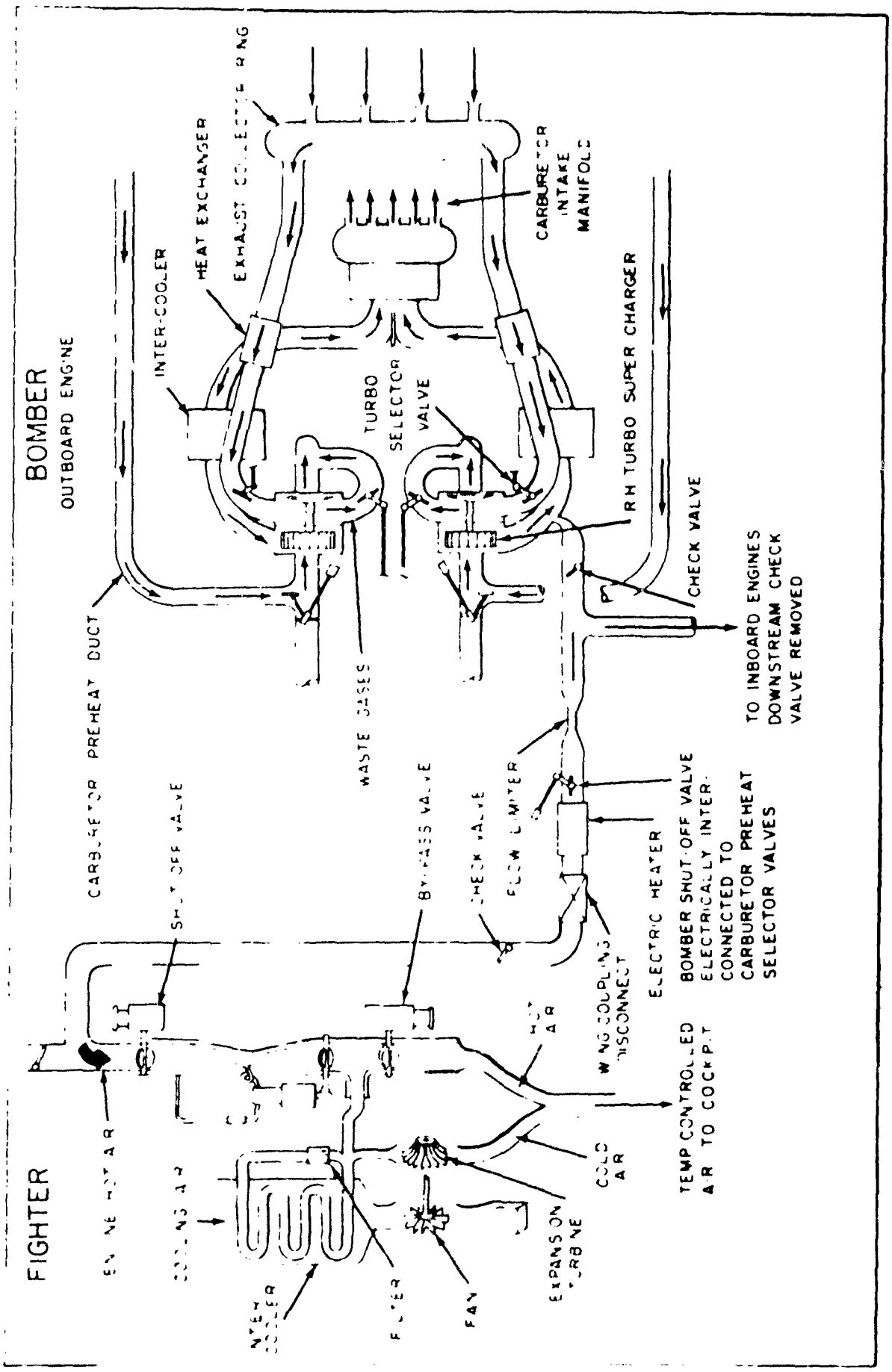


FIGURE 22 SCHEMATIC - HEATING VENTILATION AND PRESSURIZATION

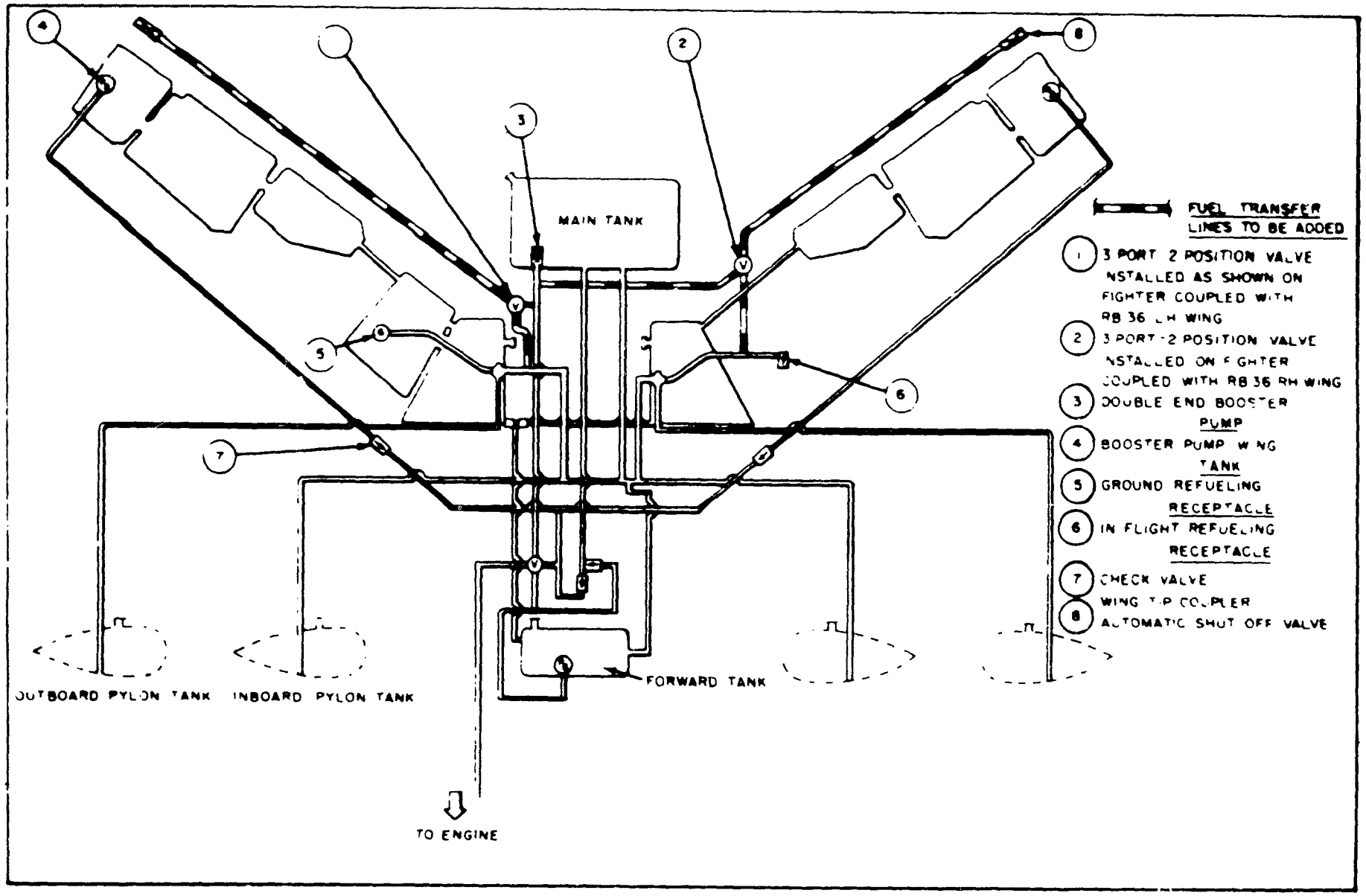


FIGURE 23 - SCHEMATIC - RF-84F FUEL SYSTEM

3. Intercommunications System

An interphone connection between the B-36 and RF-84F was provided to permit communication during coupled flight by either interphone or radio.

4. Electrical Power Supply

Modifications to both the B-36 and RF-84F electrical systems were required to supply the power used in the coupling mechanism system. Power for the RF-84F during coupled flight is supplied from the B-36. The RF-84F power requirements were 400 amperes at 28 volts DC, requiring installation of two 200-ampere transformer rectifiers in the bomber to convert 115/208 volt three-phase 400-cycle to 28 volt DC. During the flight test program, four 50-amp TR units were used rather than the above due to reduced power requirements for the minimum flight test program carried out and, also, because of greater reliability.

5. Lighting System

The B-36 and RF-84F navigation lights and the RF-84F landing lights were relocated because of the installation of the coupling mechanism on the wing tips. Nine reference lights were installed on the upper surface of the B-36 as a navigational aid for approach of the RF-84F to the B-36. Lights were also installed on the outboard side of the main structural boom of the B-36 coupling mechanism and in the leading edge of the RF-84F wing to illuminate the coupling mechanism for night operations.

## PROOF LOAD AND SPRING-RATE TESTING

Ground tests were in two categories:

1. Structural Tests
2. Operational Tests.

In order to accomplish the latter it was necessary to construct a "tower" to lift and maneuver the RF-84F aircraft while simulating coupling and de-coupling operations (see Figures 24 and 25 ). The tower also proved invaluable in conducting structural tests.

The structural tests were of two types:

1. Tests to prove the adequacy of the structural design
2. Tests to determine spring rates of the coupling mechanisms and the wings.

Tests to prove the adequacy of a structural design are called "proof" tests. Proof loads are ordinarily limit design loads, and such is the case for the proof load tests reported here.

The spring rate tests were needed primarily for stability computations, and, secondarily, for determining dynamic loads.

### A. STRUCTURAL PROOF TESTS AND DETERMINATION OF SPRING RATES

#### 1. Proof Tests and Spring Rates of the B-36 Wing and Coupling Mechanism

These tests were conducted between 26 September and 14 November 1955 (Convair Report FZS-119, Reference 7 ).

a. Design Conditions and Corresponding Proof Loads

(1) A 50K ft/sec up gust acting on the RF-84F airplane alone was simulated by applying the following loads in 20 percent increments. A 9,070-pound vertical couple at the forward and aft attach points simultaneous with a 5,430-pound aft-acting load at the forward attach

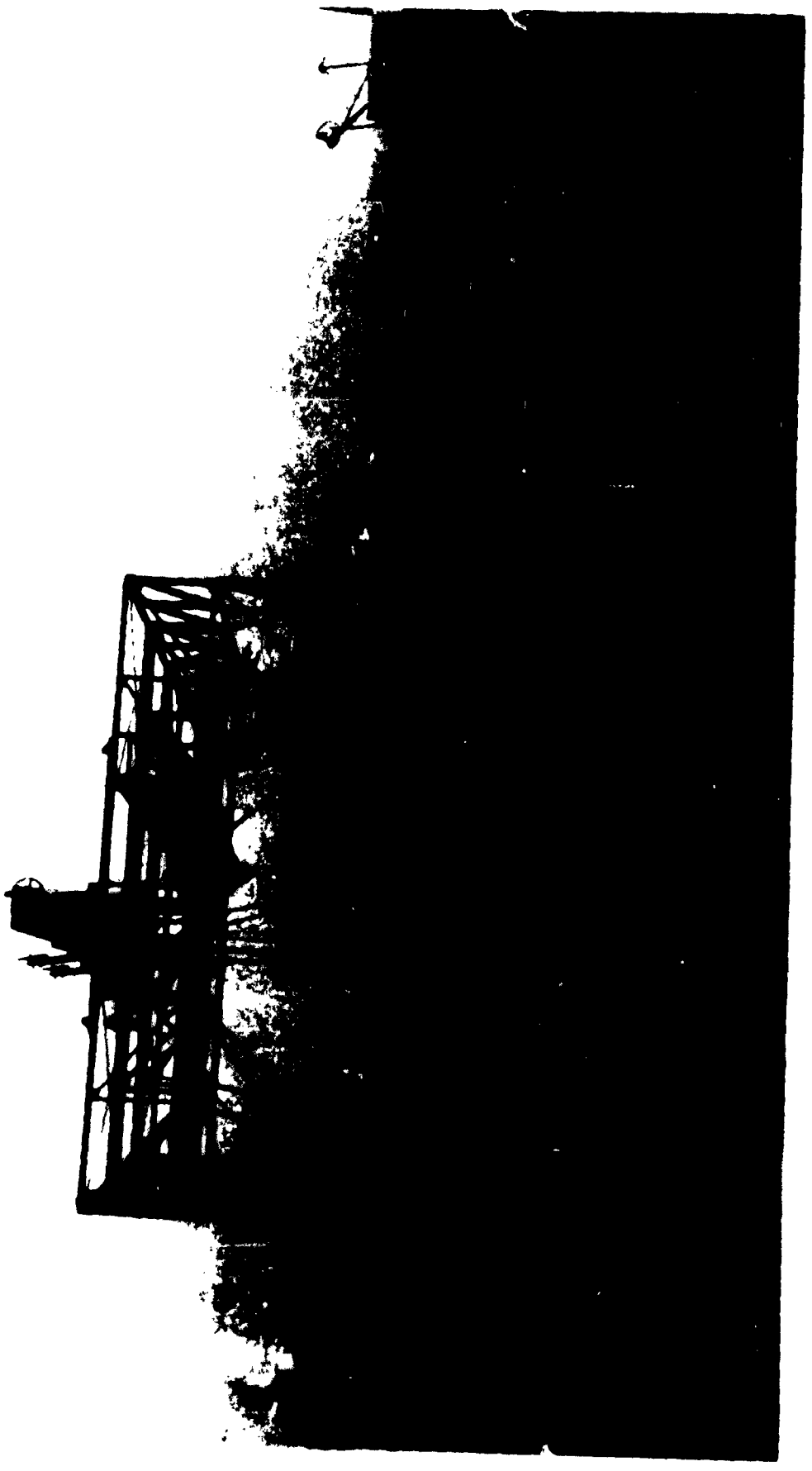

FIGURE 24 OVER-ALL VIEW OF TOWER FOR COUPLING AND DE-COUPLING OPERATIONS

FIGURE 25 CLOSE-UP VIEW OF RF-84F IN TOWER

point; a 10,680-pound chord plane couple at the forward and aft attach points; and a 6,245-pound up load at the point of intersection of the roll and effective elastic axes.

During this test, buckling occurred at 100% percent of simulated ultimate load in two wing upper surface trailing edge panels located on either side of Wing Station 38.0. Repair and replacement of these panels together with design changes to the intermediate spar were accomplished. The above test was re-run and no permanent deformation or buckling of the structure was noted.

(2) The Dynamic response of the RF-84F to the 50K ft/sec up gust was simulated by applying the following loads at 20 percent increments and measuring the resultant deflections: A 9,070-pound vertical couple at the forward and aft attach points simultaneous with a 5,430-pound aft-acting load at the forward attach point. A 10,680-pound couple in the chord plane at the forward and aft attach points, and a 6,245-pound vertical load at the intersection of the roll and effective elastic axes distributed between the forward and aft attach points and combined with the 9,070-pound couple forces.

There was no evidence of permanent deformation in either the wing or coupling mechanism structure as a result of this test.

(3) A 25K ft/sec gust acting on the RF-84F alone when in the single-point coupled position was simulated by applying the following loads in 20 percent increments: A 4,000-pound aft-acting load and an up load of 4,180-pounds simultaneously at the forward attach point.

There was no evident of permanent deformation in either the wing or coupling mechanism structure as a result of this test.

(4) Initial contact at 3 ft/sec relative closing speed was simulated by applying an aft-acting load of 4,000 pounds at the forward attach point in 20 percent increments.

There was no evidence of permanent deformation either in the wing or coupling mechanism as a result of this test.

b. Spring Rate Determination

(1) The elastic axis location was found by applying up loads to the forward and aft coupling points in such a ratio as to produce equal deflections. It was found to be 11.05 inches forward of the aft attach point measured on a line joining the forward and aft attach points.

(2) Spring rate values were calculated from deflections obtained by the application of the following loads in 20 percent increments:

(a) A 5000-pound aft load at the forward attach point

(b) A 5000-pound aft load at the aft attach point

(c) Vertical couple forces of 5000 pounds were applied to the forward and aft attach points

(d) An up load of 5000 pounds at the intersection of the roll and the effective elastic axis together with an aft-acting load of 4000 pounds at the forward attach point.

The spring rates determined from these tests were:

(a) Drag deflection due to a couple in the chord plane = 462,000 foot lbs/ft.

(b) Wing station slope (planview) due to couple in chord plane = 7,400,000 foot lbs/rad.

(c) Torsion due to vertical couple at the coupling points = 1,130,000 foot lbs/rad.

(d) Torsion due to vertical couple at Wing Station 40 (1324 in. from ℄ airplane) = 2,390,000 foot lbs/rad.

(e) Vertical due to vertical up load = 6000 lbs/ft.

(f) Drag due to aft-acting load = 9,600 lbs/ft.

(g) Wing station slope (planview) due to aft-acting load = 550,000 lbs/rad.

2. Proof Test and Spring Rates of the RF-84F Wing and Coupling Mechanism

Proof tests of the RF-84F coupling mechanism were conducted between 3 November 1955 and 18 November 1955. (Convair-Report FZS-119, Add 1, Reference 11).

The purpose of these tests was to determine whether the RF-84F airplane and its attached coupling mechanism would withstand the design limit loads without evidence of permanent deformation.

a. Design Conditions and Corresponding Proof Loads

(1) A 50K ft/sec up gust acting on the RF-84F airplane alone was simulated by applying the following loads in 20 percent increments:

A 10,680-pound chord plane couple to the forward and aft attach points simultaneous with a 5,430-pound forward-acting load at the forward attach point, a 9,070-pound up load at the forward attach point, a 9,070-pound down load at the aft attach point, and a 6,245-pound down load at the intersection of the roll and effective elastic axis.

(2) The Dynamic response of the RF-84F to the 50K ft/sec up gust acting on the RF-84F was simulated by applying the following loads at 20 percent increments: A 10,680-pound chordwise couple to the forward and aft attach points simultaneous with a 5,430-pound forward-acting load applied at the forward attach point, a 9,070-pound down load at the forward attach point, a 9,070-pound up load at the aft attach point, and a 6,245-pound down load at the intersection of the roll and effective elastic axes.

(3) A 25K ft/sec gust acting on the RF-84F alone when in the single-point position was simulated by applying the following loads at 20 percent increments: A 4,180-pound down load at the forward attach point simultaneous with a 4,000-pound forward-acting load at the forward attach point.

(4) Initial contact at 3 ft/sec relative closing speed was simulated by applying an aft-acting load of 4,000 pounds at the forward attach point in 20 percent increments.

The RF-84F wing and coupling mechanism successfully withstood the four proof-load conditions with no evidence of failure or permanent deformation.

b. Spring Rate Determination

(1) The elastic axis location was determined by applying up loads to the center of the forward and aft attach points in a ratio to produce equal deflections. The effective elastic axis was found to be 28.114 aft of the forward attach point.

(2) Spring rates were determined by applying the following loads in 25 percent increments and measuring the resultant deflections:

(a) A 3,500 pound up load at the intersection of the roll and elastic axes

(b) A 5,000-pound forward-acting load at the forward attach point

(c) A 3,000-pound chord plane couple at the forward and aft attach points

(d) A 3,000-pound vertical couple at the forward and aft attach points.

The spring rates as determined from these tests were:

(a) Vertical due to up load = 16,800 lbs/ft

(b) Drag due to forward-acting load = 178,500 lbs/ft

(c) Chord slope (planview) due to forward-acting load = 1,645,000 foot lbs/rad

(d) Drag due to chord plane couple = 1,295,000 foot lbs/ft

(e) Chord slope (planview) due to chord plane couple = 3,100,000 foot lbs/ft

(f) Torsion due to vertical couple = 983,000 foot lbs/rad

## B. OPERATIONAL TESTS OF COUPLING MECHANISMS

### 1. Emergency Release System Tests

Tests of the squib-fired emergency release system were run during the latter part of 1955. (Convair Report FSG-413, Reference 8 ).

The purpose of these tests was to determine if the squib-fired emergency release mechanism would operate properly.

The forward attach components were installed in a test jig. A pneumatic ram was used to apply a load on the RF-84F coupling mechanism spool simulating flight loads. The aft attach point release mechanism which consists of a spring-loaded plunger was also installed in a test jig to simulate the airplane installation. Two squibs are installed at each of these attach points.

Tests were first run by firing one squib at each release point. This was followed by firing both squibs simultaneously. In all cases it was found that the emergency releases operated satisfactorily with no damage to components of the mechanism.

### 2. Latch Release Tests Under Simulated Flight Loads

Tests of the Tom-Tom coupling system latches were conducted during the latter part of February 1956 (Convair Report, FTDM-1518, Reference 9).

The purpose of these tests was to determine, prior to test flight, if the latches would release under simulated flight loads.

The test specimens consisted of the RB-36F and RF-84F airplanes with the Tom-Tom coupling mechanism installed. The B-36 was tied down and the RF-84F was suspended by a support tower so that the airplane could be coupled as in flight. Figures 26, 27, 28 and 29 show the test set up.

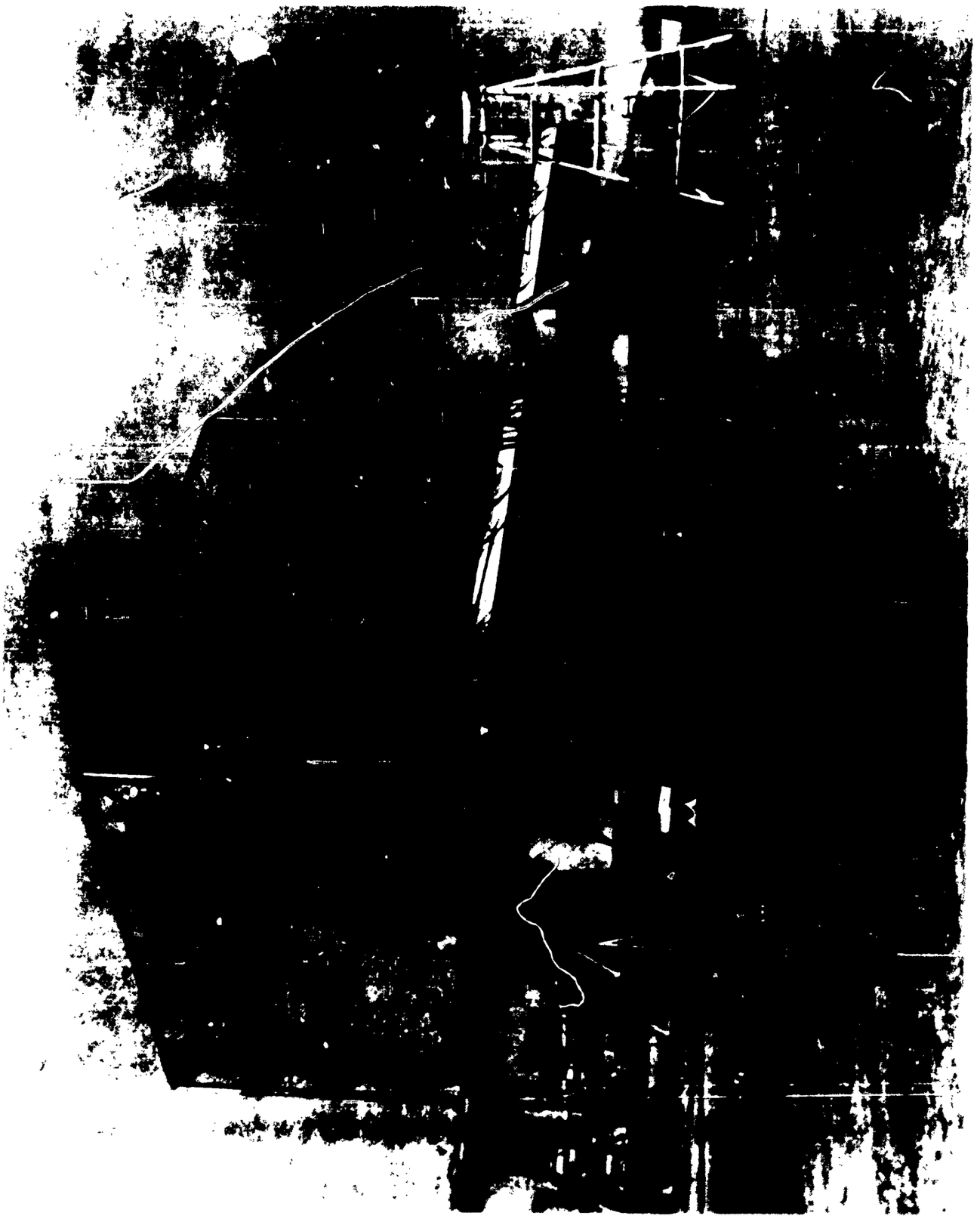

FIGURE 26 LATCH RELEASE TEST SETUP

FIGURE 27 LATCH RELEASE TEST SETUP - DOWN LOAD

FIGURE 28 LATCH RELEASE TEST SETUP - UP LOAD

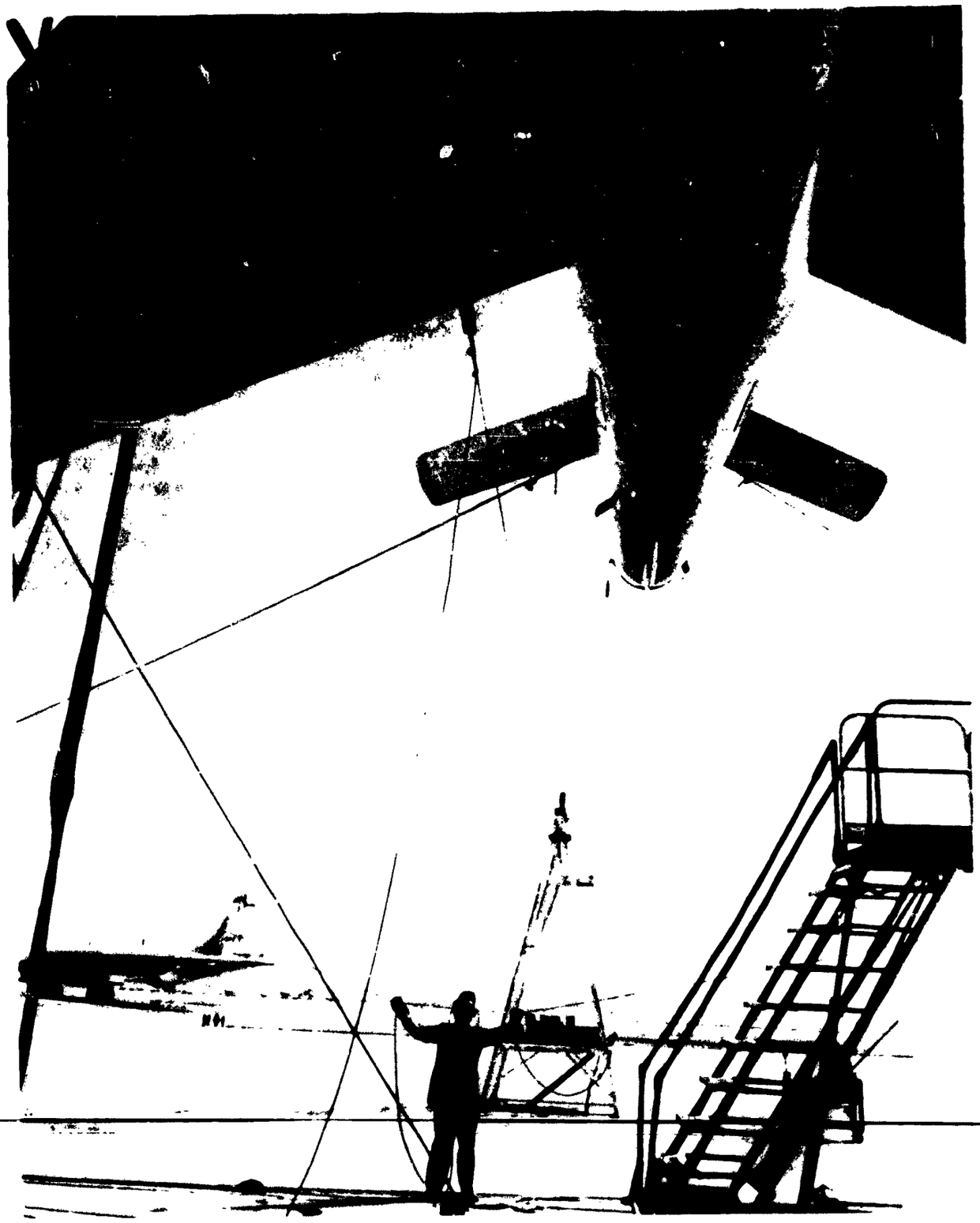

FIGURE 29 LATCH RELEASE TEST SETUP - AFT LOAD

Loading to simulate flight conditions was accomplished by using hydraulic rams to apply a down load of up to 6,000 pounds to the aft attach point, and up load of up to 6,000 pounds to the forward attach point, and a drag load of up to 2,500 pounds. The release mechanism was actuated at 250-pound increments up to the above maximum loads. The RF-84F was then rolled to a position of 11 degrees left and then 10 degrees right, with a 3,000-pound vertical couple and a 2,500-pound drag load. The release mechanism was actuated in each of these positions. The tower was moved so that a 2,500-pound thrust load with a 6,000-pound vertical couple could be applied and the release mechanism was actuated under this loading condition.

Difficulty was encountered in the early parts of these tests until the proper adjustments and alignments were worked out. After these difficulties were overcome the mechanism released satisfactorily under the above simulated flight load conditions.

After flight testing began, many variations of the above simulated flight loading conditions were conducted. These additional tests were necessary because of the various difficulties encountered in flight, such as: (1) too-frequent actuation of the roll release, (2) tilt of the bomber mechanism coupling head about the pitch axis without recovering to a neutral position, (3) partial retraction of the bomber boom occasioned by fighter contact force, (4) failure of parts, (5) inability to hit the target area (one improvement was the addition of horns, see pp 58 and 59 of FZA-36-342 and page 52 of this report), (6) failure of the boom to retract after single-point attachment had been achieved, and (7) miscellaneous other difficulties. All these tests were conducted in the tower.

The tower tests occasioned by flight test difficulties were of two kinds: (1) those conducted to better understand the happenings in flight; and (2) those conducted after a flight-dictated "fix" had been made on the coupling mechanism to prove the fix, or to demonstrate to the flight crew that the mechanism had not been improperly adjusted during the fix.

## STABILITY AND CONTROL

### A STATIC ANALYSIS

The static condition of the fully coupled bomber-fighter composite can be summarized by specifying the fighter roll angle and the load on the rear attachment point. To this end Convair conducted a study to define these values at all proposed flight conditions. The results have been published as Convair Report FZA-273, Project Tom-Tom, Static Analysis of the Skewed-Axis Condition, dated 6 November 1957. (Reference 16)

In controlling roll angle, it was found that aileron deflection has negligible effectiveness, elevator and flap deflections are moderately effective, and rear-point position is highly effective. Rear-point load is most sensitive to elevator deflection, and relatively insensitive to the other controls.

The report cited presents alignment charts by which roll angle and rear-point load may be determined under any proposed condition of flight. Numerical values for the control sensitivities are also presented as functions of airspeed.

### B. STABILITY AND CONTROL STUDIES

As a result of experience with several previous wing-tip coupling programs, it was known that problems of stability and control would be of major importance in the Tom-Tom project. Accordingly, a great deal of effort was directed towards solving these problems. It is believed that as a result of this work a satisfactory coupling scheme has evolved, and methods of predicting its characteristics analytically have been correlated within reasonable limits. A comprehensive report on the results of Convair studies is presented in report FZA-272, Results of Stability Studies on Skewed-Axis and Single-Point Systems, (13 September 1957) (Reference 13 ) and only the high-lights are reviewed here. Other work done by the Thieblot Aircraft Company is presented in separate publications by them.

The earlier programs utilized coupling arrangements which allowed the towed airplane freedom in roll and pitch. This type of system is inherently unstable, though controllable, and required automatic control devices to relieve the pilot of the control task Because of reliability considerations, this approach

was not entirely satisfactory, and the need for a basic improvement in the coupling scheme soon became apparent. Thus, the skewed-axis concept evolved, and it was first evaluated by preliminary, simplified studies which considered flexibility of the bomber wing together with fighter roll. It was concluded that an inherently stable system could be attained if sufficient structural rigidity was provided in the bomber wing. Early calculations and assumptions indicated that the required structural rigidity was present, or could be provided without excessive weight penalty. On this basis, it was decided to incorporate the skewed-axis concept in the Tom-Tom configuration and eliminate the requirement for automatic control aids (see Figure 30 ). This was an important decision, for it represented a major departure from the trends of earlier programs. However, greater confidence in this decision was felt when it was learned that the NACA was thinking along identical lines and had just completed dynamic-model wind-tunnel tests on the skewed-axis concept which had demonstrated its inherent stability.

It was necessary to study the stability characteristics of an intermediate, partially coupled configuration in addition to the skewed-axis configuration. This intermediate case is referred to as the single-point case and represents the condition for attachment at the forward point only (See Figure 31). This condition must be controllable to enable successful completion of the coupling operation. It was found that the system exhibits a non-oscillatory divergence for all feasible locations of the attachment point on the fighter, but the degree of divergence is reduced for the most forward locations. Bomber-wing flexibility and bomber degrees of freedom had no significant effect on the stability of this condition; therefore, simplified studies defined the important characteristics with sufficient accuracy. In order to select a suitable design location of the forward attachment point, simulator studies were conducted to measure the pilot's ability to counteract the instability. It was found that there was a definite limit to the controllable locations, which are those having approximately the same fore-and-aft position as the fighter c.g. This requirement meant that a long boom would be necessary on the fighter because of the effect of its wing sweep. Prior to flight tests additional simulator studies were conducted using a more elaborate setup. In this way the controllability of the final design was evaluated at a number of flight conditions and the pilots were given valuable training. Characteristics of the earlier Q-14 arrangement, which had been flown by the two project pilots, were also simulated to help establish the correspondence between

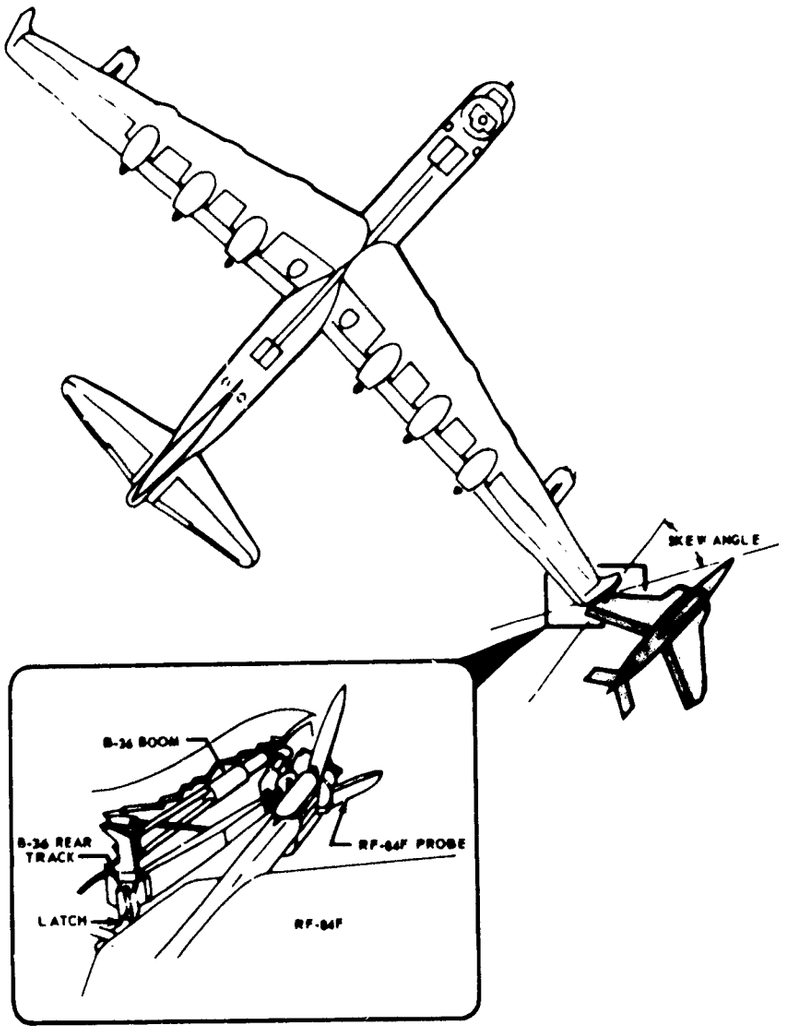


TWO-POINT ATTACHMENT (SKEWED AXIS ARRANGEMENT)

The axis about which the fighter was free to roll was skewed with respect to the plane of symmetry of the bomber. In this condition, the fighter was restrained in yaw and assumed an equilibrium pitch angle at which time it was locked in pitch, thus allowing only freedom in roll about the skewed axis. This resulted in a dynamically stable configuration which did not require control by the fighter pilot.

FIGURE 30 TWO-POINT ATTACHMENT (SKEWED AXIS ARRANGEMENT)

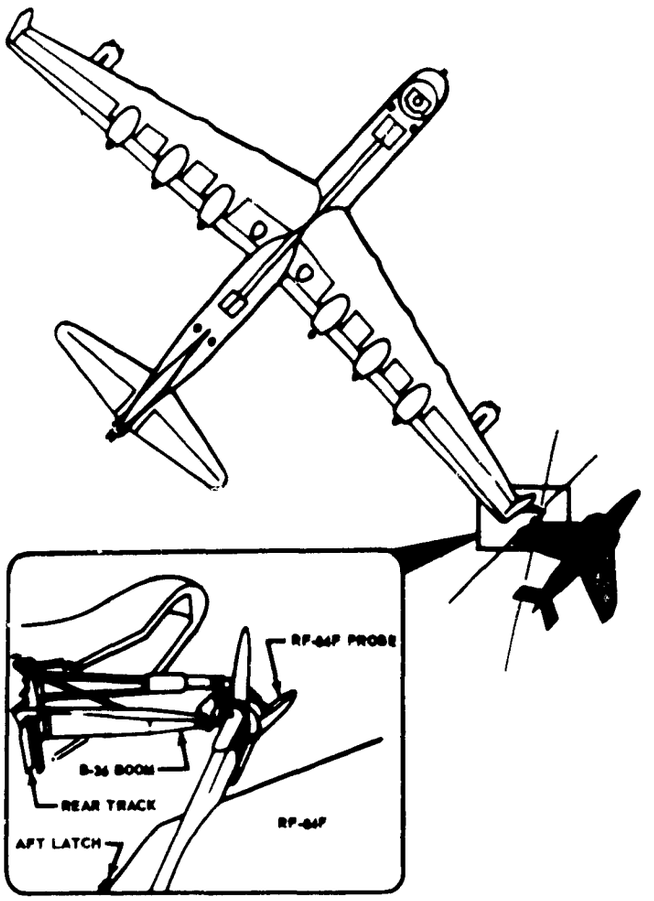


**SINGLE POINT ATTACHMENT**

In the single point attachment, the fighter still required control from the fighter pilot. Upon a predetermined signal, the B-36 operator retracted the boom, drawing the fighter toward the wing tip of the B-36 so that the aft latch on the fighter engaged the rear track on the bomber.

**FIGURE 31 SINGLE-POINT ATTACHMENT**

simulator controllability and that actually experienced in flight. As a result of these studies, it is believed that a reasonable simulation of the Tom-Tom configuration response was obtained. The Tom-Tom single-point configuration was found to be easily controllable at all anticipated flight conditions.

Since the major hopes for the success of the project were based on the inherent stability of the skewed-axis configuration studies of it were, of necessity, considerably more involved than those on the single-point configuration. The complexity of the problem was accentuated by the importance of aeroelastic effects and bomber degrees of freedom. In the first studies, the bomber degrees of freedom were omitted and an effort was made to establish the effect of flexibility. For this purpose, the bomber wing was depicted as a weightless elastic cantilever beam which had torsional and vertical bending flexibility. Extensive parametric studies were performed on this system, and some of the design features thereby crystallized. The effect of adding chordwise-bending flexibility was also studied, and this degree of freedom was subsequently included in all future work. Difficulty was experienced in attempting to improve the simulation of the actual system by adding tip masses to the cantilever beam, but this was later corrected by a more thorough treatment. Also, there were progressive changes in the definition of the spring constants, which had a significant effect upon the predicted instability speeds.

Static-load tests on the actual flight article indicated several of the primary spring constants to be significantly different from those then in use. These differences were due, primarily, to the failure to consider flexibility of the boom mechanisms on the bomber and of the probe on the fighter. Consequently, radical changes took place in the calculated results when these modifications were considered. The net result was that much lower instability speeds were predicted for the flight configuration than was obtained in earlier calculations. Also, the results of the dynamic-model wind tunnel program did not represent the characteristics of the flight configuration, since the flexibility of the booms was not duplicated. Calculations performed with the dynamic-model spring constants, however, indicated reasonable agreement with the test results, so that a valuable correlation was thus obtained.

Throughout these studies it was found that chordwise bending did not have a primary influence on the stability. It was shown that the chordwise degree of freedom introduced an additional marginally damped mode to the system; but, unless the spring constants were adversely mated in a special way, there was little coupling associated with this mode. In the final calculations which predicted the characteristics of the flight configuration, it was shown by dropping the chordwise degree of freedom that it has practically no coupling effects but merely superimposes an additional mode. The primary tendency towards instability is also not related to the chordwise degree of freedom - it is due to torsion and vertical bending. Special effort is made to point out these effects in Convair Report FZA-272.

In considering bomber degrees of freedom, the analysis was considerably simplified for the two-fighter case by assuming no coupling between the longitudinal and lateral degrees of freedom. This procedure was first suggested by the NACA and results in separate symmetrical and anti-symmetrical cases. In general, the symmetrical case produced only small changes in the primary modes obtained in the basic fighter subsystem; while the anti-symmetrical case produced greater changes, which were favorable. When only one fighter is considered, the analysis cannot be correctly simplified in this way and it would be necessary to consider a large number of degrees of freedom. However, under the limitations of a sixth-order system, an approximate representation of this system obtained by modification to the original lateral, or anti-symmetrical case. These result were used to correlate flight data.

Successful flight tests were conducted on both the single-point and skewed-axis configurations, and stability data obtained for the latter. The correlation of these flight results with the analytical predictions is indicated in Figure 32 for the two primary modes of the system which were measurable. Mode "A" is the one identified as the chordwise mode in the calculations; while mode "B" is the primary fighter roll mode. Mode "B" became unstable at 219 mph as compared with a predicted value of 197 mph.

Much time was lost in the early portion of the flight test program because of mechanical difficulties. Exhaustion of funds required that the program be temporarily suspended before sufficient data was obtained.

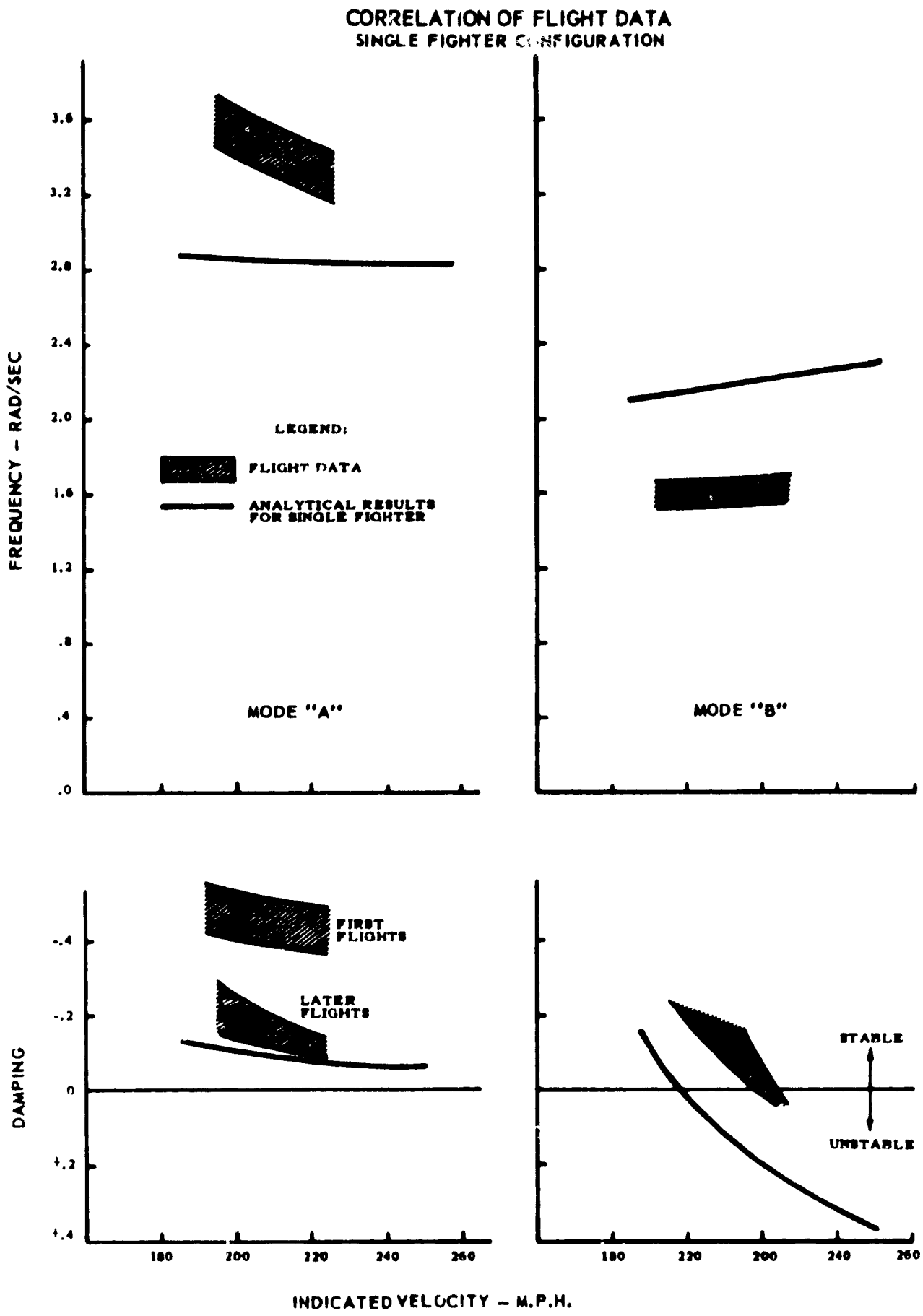


FIGURE 32 – CORRELATION OF FLIGHT DATA

After a delay, the flight program was resumed, with improved instrumentation. Additional data was taken at the same flight conditions considered previously. The flight program was finally terminated by an incident on Flight No. 18 which caused serious damage to the mechanism. However, sufficient data was obtained prior to this incident to enable desired correlation so that termination of the flight tests did not actually prove to be of serious consequence in this regard.

Subsequent analysis of the flight records revealed some very interesting results which were not suspected at the time of the tests. In the first group of flights (before temporary suspension of program because of depleted funds) a pulse type of input of small magnitude was used by the pilot which excited only mode "A" to a measurable degree. Since this mode was well damped, an erroneous impression about the stability of the system was obtained and it was thought that it would continue stable for a considerable increase in velocity. In the second group of flights, a step input of larger magnitude was utilized and an additional mode was excited along with the other. This additional mode was the one which approached an instability and it was actually at the point of neutral stability at the highest velocity flown. There was a significant difference in the amplitude of motion between these two sets of data, and it is believed that resulting nonlinearities are responsible for the differences in damping indicated in mode "A." However, it is also indicated that another mode, probably due to fighter flexibility, may be involved; and the inability to separate it in the records may have introduced inaccuracies in the measurements.

In general, the correlation is reasonable in that the analytical results exhibit the same trends as the flight data. Discrepancies in magnitude can be better understood when it is remembered that the single-fighter calculations are only approximate and that fighter flexibility was accounted for in an inexact way. Also, the fact that the fighter is flying very close to the stall speed may mean that many of the derivatives used in the calculations are unrealistic. This effect could easily be responsible for the frequency discrepancies.

## WEIGHT AND BALANCE

The original intent of the Tom-Tom program was to provide the Strategic Air Command with a tactical weapon system. To carry out this intent, the RB-36D model aircraft was to be modified as the carrier. All weight and balance data presented here, and all performance estimates were based upon the above plan.

RB-36F aircraft, serial No. 49-2707, was used as the experimental vehicle in the Tom-Tom program. Since an RB-36F airplane's basic weight is approximately 5,500 pounds greater than that of an RB-36D, and since performance estimates were based on the latter, the basic weight listed herein should be increased by 5,500 pounds when considering performance studies for the RB-36F/RF-84F wing-tip coupling configuration used in the flight test program.

Weight and balance figures for the RF-84F and RB-36D are based upon Thieblot Aircraft Company's Weight Report No. 8, dated 15 June 1955 (except for those weights which were revised to incorporate actual weight; these exceptions are denoted by an asterisk).

WEIGHT AND BALANCE DATA

PROJECT TOM-TOM

RB-36D AIRPLANE

| Description of Item | Weight | Arm | Moment |
|---|---|---|---|
| Weight Empty of Typical RB-36D Incorporating All Latest E.C.P.'s and Based on Actual Weighing | | | |
| (Wheels and Flaps Extended) | 162,508 | 78.51 | 12,758,954 |
| (Wheels and Flaps Retracted) | ( 162,508) | 78.31 | ( 12,726,043) |
| BASIC TOM-TOM PROVISIONS TO BE INCORPORATED | ( 4,321.9) | 86.81 | ( 375,201) |
| WING GROUP | ( 2,861.4) | 86.88 | ( 248,611) |
| Outer Panel | ( 800.2) | 87.54 | ( 70,046) |
| Rework Spars | ( 385.7) | 87.25 | ( 33,654) |
| Front | 140.0 | 83.7 | 11,718 |
| Rear | * 203.4 | 88.9 | 18,082 |
| Intermediate | 42.3 | 91.1 | 3,854 |
| Rework Bulkheads | ( 115.0) | 87.35 | ( 10,045) |
| Bulkhead 33.0 | 7.9 | 84.7 | 669 |
| Bulkhead 34.0 | 8.2 | 85.3 | 699 |
| Bulkhead 36.0 | 8.4 | 86.4 | 726 |
| Bulkhead 37.0 | 6.8 | 87.1 | 592 |
| Bulkhead 38.0 | 40.0 | 87.7 | 3,508 |
| Bulkhead 39.0 | 11.0 | 88.1 | 969 |
| Bulkhead 40.0 | 24.7 | 88.3 | 2,181 |
| Miscellaneous | 8.0 | 87.6 | 701 |
| Rework Stringers | ( 41.1) | 86.20 | ( 3,543) |
| Upper Surface | 29.0 | 86.2 | 2,500 |
| Lower Surface | 12.1 | 86.2 | 1,043 |
| Rework Skins | ( 127.7) | 86.20 | ( 11,008) |
| Upper Surface | 63.0 | 86.2 | 5,431 |
| Lower Surface | 64.7 | 86.2 | 5,577 |
| Rework Trailing Edge | ( 126.0) | 90.36 | ( 11,385) |
| Spar (Intermediate) T.E. Extension | 18.4 | 92.2 | 1,696 |
| Skin (Upper and Lower) | 16.1 | 90.2 | 1,452 |
| Stringers (Upper and Lower) | 11.6 | 90.2 | 1,046 |
| Bulkhead No. 38. | 33.1 | 89.5 | 2,962 |

*Actual Weight

WEIGHT AND BALANCE DATA

PROJECT TOM-TOM

RB-36D AIRPLANE (Cont'd)

| Description of Item | Weight | Arm | Moment |
|---|---|---|---|
| BASIC TOM-TOM PROVISIONS TO BE INCORPORATED (Continued) | | | |
| WING GROUP (Continued) | | | |
| Outer Panel (Continued) | | | |
| Bulkhead No. 39. | 6.5 | 90.2 | 586 |
| Bulkhead No. 40. | 21.5 | 90.4 | 1,953 |
| Fittings and Miscellaneous Parts | 18.7 | 90.4 | 1,690 |
| Miscellaneous Rework | * 4.7 | 87.5 | 411 |
| Aileron Rework | - 10.0 | 92.4 | - 924 |
| Tips | ( 405.8) | 89.74 | ( 36,418) |
| Remove Old Tips | - 98.0 | 8.9 | - 8,810 |
| Front Spar | ( 43.4 | 88.02 | ( 3,820) |
| Web | 16.5 | 88.0 | 1,452 |
| Upper and Lower Caps | 8.2 | 88.0 | 722 |
| Stiffeners | 8.1 | 88.0 | 713 |
| Fittings and Miscellaneous Parts | 10.6 | 88.0 | 933 |
| Rear Spar | ( 80.3) | 91.20 | ( 7,323) |
| Web | 19.0 | 91.2 | 1,733 |
| Upper and Lower Caps | 36.0 | 91.2 | 3,283 |
| Stiffeners | 4.1 | 91.2 | 374 |
| Fittings and Miscellaneous Parts | 21.2 | 91.2 | 1,933 |
| Ribs | ( 83.8) | 89.24 | ( 7,478) |
| Ribs No. 41 | 31.3 | 89.3 | 2,795 |
| Ribs No. 42 | 15.7 | 89.2 | 1,400 |
| Ribs No. 43 | 36.8 | 89.2 | 3,283 |
| Stringers | ( 23.9) | 89.12 | ( 2,130) |
| Upper Surface | 15.0 | 89.1 | 1,337 |
| Lower Surface | 8.9 | 89.1 | 793 |
| Skin | ( 76.6) | 89.50 | ( 6,856) |
| Upper Surface | 38.3 | 89.5 | 3,428 |
| Lower Surface | 38.3 | 89.5 | 3,428 |

*Actual Weight

WEIGHT AND BALANCE DATA

PROJECT TOM-TOM

RB-36D AIRPLANE (Cont'd)

| Description of Item | Weight | Arm | Moment |
|---|---|---|---|
| BASIC TOM-TOM PROVISIONS TO BE INCORPORATED (Continued) | | | |
| WING GROUP (Continued) | | | |
| Tips (Continued) | | | |
| Fittings | ( 140.5) | 90.19 | ( 12,672) |
| Front Boom Hinge | 31.6 | 89.1 | 2,816 |
| Rear Boom Hinge | 86.8 | 91.1 | 7,907 |
| Actuator Support | 22.1 | 88.2 | 1,949 |
| Standard and Miscellaneous Parts | 55.3 | 89.5 | 4,949 |
| Coupler Fairing | ( 302.4) | 88.44 | ( 26,743) |
| Skin | ( 121.9) | 88.34 | ( 10,769) |
| Top | 55.4 | 88.5 | 4,903 |
| Bottom | 55.4 | 88.5 | 4,903 |
| Leading Edge Extension | 11.1 | 86.8 | 963 |
| Bulkhead | 97.7 | 88.5 | 8,646 |
| Stringers | ( 50.4) | 88.51 | ( 4,461) |
| Top | 26.2 | 88.5 | 2,319 |
| Bottom | 24.2 | 88.5 | 2,142 |
| Frame | 21.8 | 88.5 | 1,929 |
| Fittings and Miscellaneous Parts | * 10.6 | 88.5 | 938 |
| Coupling Mechanism | ( 1,363.0) | 85.35 | ( 116,328) |
| Head Coupling | 65.5 | 81.4 | 5,332 |
| Forward Lock | 16.1 | 83.0 | 1,336 |
| Forward Release Mechanism | 44.7 | 80.5 | 3,598 |
| Head Support | 174.5 | 80.0 | 13,960 |
| Aft Structure Boom | 291.3 | 87.0 | 25,343 |
| Forward Structure Boom | * 251.0 | 84.5 | 21,210 |
| Reset Actuators | 96.0 | 86.9 | 8,342 |
| Carriage - Track | 68.0 | 89.4 | 6,079 |

*Actual Weight

WEIGHT AND BALANCE DATA

PROJECT TOM-TOM

RB-36D AIRPLANE (Cont'd)

| Description of Item | Weight | Arm | Moment |
|---|---|---|---|
| BASIC TOM-TOM PROVISIONS TO BE INCORPORATED (Continued) | | | |
| WING GROUP (Continued) | | | |
| Coupling Mechanism (Continued) | | | |
| Boom Positioning Actuators | 160.0 | 86.5 | 13,840 |
| Aft Lock Track | 60.9 | 89.6 | 5,457 |
| Utility Coupling | 99.1 | 89.9 | 8,909 |
| Fittings and Miscellaneous Parts | * 35.9 | 81.4 | 2,922 |
| ELECTRICAL GROUP | ( 506.8) | 85.55 | ( 43,356) |
| Supplemental DC Power Unit | ( 186.0) | 88.70 | ( 16,499) |
| Breaker, Relays, Fuses, and Block Panel | 10.6 | 88.8 | 941 |
| Transmitter Rectifier | 164.0 | 88.7 | 14,547 |
| Filter | 11.4 | 88.7 | 1,011 |
| Boom Actuator Control | 33.0 | 89.3 | 2,947 |
| Reset Actuator | 8.1 | 115.5 | 936 |
| Utilities Control System | ( 35.4) | 91.27 | ( 3,231) |
| Relays and Switches | 5.8 | 89.2 | 517 |
| Motors | 29.6 | 91.7 | 2,714 |
| Fuselage Lights | 4.3 | 81.6 | 351 |
| Wiring | 210.9 | 80.8 | 17,041 |
| Standard and Miscellaneous Parts | 29.1 | 80.8 | 2,351 |
| FUEL SYSTEM | ( 839.0) | 87.57 | ( 73,475) |
| Ficon Tank and Rework | * 633.1 | 89.7 | 56,789 |
| Tank Vent Installation | 14.5 | 89.7 | 1,301 |
| Booster Tank | 13.7 | 80.1 | 1,097 |
| Valves | 8.2 | 78.5 | 644 |
| Hose | 83.5 | 75.2 | 6,279 |
| Fuel System - Wing Tip | 18.2 | 92.3 | 1,680 |
| Fuel Line | 39.0 | 80.8 | 3,151 |
| Fittings and Miscellaneous Parts | * 28.8 | 88.0 | 2,534 |

*Actual Weight

WEIGHT AND BALANCE DATA

PROJECT TOM-TOM

RB-36D AIRPLANE (Cont'd)

| Description of Item | Weight | Arm | Moment |
|---|---|---|---|
| BASIC TOM-TOM PROVISIONS TO BE INCORPORATED (Continued) | | | |
| COMMUNICATING | ( 7.6) | 110.13 | ( 837) |
| Amplifier | 5.0 | 109.0 | 545 |
| Standard Parts | 2.6 | 112.4 | 292 |
| FURNISHINGS | ( 107.1) | 83.31 | ( 8,922) |
| Hot Air Line | 85.0 | 83.3 | 7,081 |
| Standard and Miscellaneous Parts | 22.1 | 83.3 | 1,841 |
| TOTAL WEIGHT EMPTY TOM-TOM RB-36D (Wheels and Flaps Extended) | 166,829.9 | 78.73 | 13,134,155 |
| Center of Gravity 43.7% | | | |
| TOTAL WEIGHT EMPTY TOM-TOM RB-36D (Wheels and Flaps Retracted) | 166,829.9 | 78.53 | 13,101,244 |
| Center of Gravity 43.9% | | | |

WEIGHT AND BALANCE DATA

PROJECT TOM-TOM

RF-84F AIRPLANE

| Description of Item | Weight | Arm | Moment |
|---|---|---|---|
| WEIGHT EMPTY RF-84F EW-38-204 (Republic Aviation Company Report) | | | |
| (Wheels Up) | 14,069.6 | 324.80 | 4,569,861 |
| (Wheels Down) | 14,069.6 | 324.84 | 4,570,405 |
| BASIC TOM-TOM PROVISIONS TO BE INCORPORATED | ( 675.6) | 371.42 | ( 250,933) |
| WING GROUP | ( 574.6) | 379.64 | ( 218,142) |
| Rework Spars | ( 40.0) | 397.60 | ( 15,904) |
| Front | 24.6 | 387.2 | 9,525 |
| Rear | 15.4 | 414.2 | 6,379 |
| Rework Ribs | 18.1 | 417.8 | 7,562 |
| Rework Stringer | 3.0 | 387.3 | 1,162 |
| Rework Skin | ( 52.1) | 392.90 | ( 20,470) |
| Upper Surface | 26.8 | 392.9 | 10,530 |
| Lower Surface | 25.3 | 392.9 | 9,940 |
| Rework Leading Edge | 32.1 | 382.0 | 12,262 |
| Coupling Fairing | 24.1 | 432.3 | 10,418 |
| Fittings | 22.7 | 429.0 | 9,738 |
| Rework Miscellaneous | 20.2 | 419.0 | 8,464 |
| Coupling | ( 362.3) | 364.79 | ( 132,162) |
| Probe | ( 228.4) | 322.40 | ( 73,637) |
| Mechanism | 86.1 | 322.4 | 27,759 |
| Structure | 142.3 | 322.4 | 45,878 |
| Aft Lock | 115.5 | 439.0 | 50,705 |
| Standard and Miscellaneous Parts | 18.4 | 425.0 | 7,820 |
| ELECTRICAL GROUP | ( 29.7) | 304.75 | ( 9,051) |
| Lock System Aft and Probe | 12.4 | 330.0 | 4,092 |
| Rework Wiring | 7.8 | 323.0 | 2,519 |
| Rework Lighting | 5.0 | 218.0 | 1,090 |
| Standard and Miscellaneous Parts | 4.5 | 300.0 | 1,350 |

WEIGHT AND BALANCE DATA

PROJECT TOM-TOM

RF-84F AIRPLANE (Cont'd)

| Description of Item | Weight | Arm | Moment |
|---|---|---|---|
| **BASIC TOM-TOM PROVISIONS TO BE INCORPORATED** (Continued) | | | |
| **HYDRAULIC SYSTEM** | 31.0 | 315.10 | 9,768 |
| **FUEL SYSTEM** | 22.4 | 314.51 | 7,045 |
| **FURNISHINGS** | 17.9 | 386.98 | 6,927 |
| WEIGHT EMPTY TOM-TOM RF-84F (Wheels Up) | 14,745.2 | 326.94 | 4,820,794 |
| Center of Gravity 32.7% | | | |
| WEIGHT EMPTY TOM-TOM RF-84F (Wheels Down) | 14,745.2 | 362.98 | 4,821,338 |
| Center of Gravity 32.7% | | | |

## PERFORMANCE

### A. Prediction of Aerodynamic and Performance Characteristics

Performance estimates for the parasite aircraft (RF-84F) and the production parasite system (RB-36D-III carrier plus two RF-84F's) were made by Thieblot under subcontract to Convair. The prediction of aerodynamic characteristics and performance estimates were monitored by Convair personnel. Drag predictions for the production model were made by Thieblot and monitored by Convair. On the basis of these predictions, Convair estimated drag and performance for the prototype system (standard RB-36F carrier plus two RF-84F's).

The engine data for the carriers had previously been determined by Convair in its study of the B-36 airplanes. Engine data used for the parasite aircraft had been determined by Republic Aircraft in its study of the RF-84F airplane.

The resulting data have been published in the following reports:

(1) FZA-36-328, Standard Aircraft Characteristics for RB-36D-III/RF-84F Tom-Tom Parasite System, dated 1 November 1955 (Reference 21).

(2) FZA-36-329, Performance Estimate for RB-36D-III/RF-84F Tom-Tom Parasite System, dated 1 November 1955 (Reference 22).

(3) FZA-36-329-1, Performance Estimate for RB-36F/RF-84F Tom-Tom Parasite System, dated 26 March 1956 (Reference 10).

(4) FZA-36-339, RB-36D-III Tom-Tom Parasite System Appendix I Data, dated 1 November 1955 (Reference 22).

(5) FZM-36-521, Spanwise Lift Distribution on Project MX-1713, dated 1 November 1955 (Reference 24).

A utility flight handbook, Convair Report No. FSE-36-1648 was prepared in rough draft form but was not published. However, copies of the rough draft, including a reproducible were submitted to the Air Force by letters FW No. 6-411 dated 5 January 1956 and FW No. 6-690 dated 18 October 1957.

B. Wind Tunnel Tests

Static and dynamic wind tunnel tests were made under the direction of Thieblot. These tests were run for the composite configuration and the carrier alone, using both full-span and semi-span models.

Stability and flutter analysis of dynamic tests, run at David Taylor Model Basin during the period 6 to 22 October 1954, was made by Convair personnel (see Reference 31). The stability and control analysis of dynamic tests, run at Langley Air Force Base during February and March 1955, was made by Thieblot (see Reference 32).

The analysis of static tests at WADC was made by Thieblot. These tests, together with previous flight tests of the B-36 and the RF-84 were used as a basis of predicting the drag level of the MX-1713 parasite system.

The following reports presented wind tunnel data obtained on this project:

(1) SDG-17, Project Tom-Tom Semi-Span Dynamic Model Wind Tunnel Tests, dated 2 November 1954 (Reference 4).

(2) SDG-18, Project Tom-Tom Full Span Dynamic Model Wind Tunnel Tests, dated April 1955 (Reference 5).

(3) FZM-36-665, Dynamic Wind Tunnel Model, Project MX-1713, dated 6 April 1956 (Reference 25).

(4) FZM-36-528 (Thieblot Aircraft Company, Inc.) Wind Tunnel Test of Static Models of the Tom-Tom Parasite System, dated 8 February 1957 (Reference 27).

C. Flight Tests

A flight test program was set up to obtain verification of the predicted aerodynamic and performance characteristics of the system. The tests accomplished were insufficient to obtain the desired results. Speed-power data for the carrier were obtained only at three points. These data gave no definite trend toward the over-all validity of the predictions. No speed-power data for the composite system were obtained.

D. Conclusions

The flight test data obtained were insufficient to provide any correlation with predictions. Therefore, any further work with the system must refer to, and make use of, the predicted data.

## WIND TUNNEL TEST PROGRAM

### A. Static Force Model Wind Tunnel Tests (Jan., Feb., 1954)

Static force model wind tunnel tests were conducted in the Massie Memorial Wind Tunnel at W-PAFB, Ohio during January and early February, 1954. These tests were made under the direction of Thieblot Aircraft Company. Convair was not represented at this test program.

The purposes of these tests were to determine the position of the F-84F in relation to the B-36 giving the best aerodynamic characteristics for the composite configuration, and to provide data on loads at the transfer point.

A 1/26-scale, full-span model of the B-36 airplane and two 1/26-scale models of the F-84F airplane were used in the tests (see Figures 33 and 34). The F-84F models were attached by their wing tips to the wing tips of the B-36 model for composite configuration tests. Wing-tip to wing-tip attachment was made with a sting balance enclosed in the B-36 wing which permitted pre-selected chord, roll, and pitch positions of the F-84F relative to the B-36. Strain gages were installed to measure normal force, chordwise force, rolling moment, yaw moment, and pitching moment of the F-84F models.

The composite configuration was tested with the F-84F models in each of three pitch positions for each of the chordwise and roll positions. Tests at two additional pitch positions, obtained by shimming the stings, were made with the F-84F models in the zero-roll position. Frequent check runs with the F-84F models in the zero-pitch position and different chordwise positions were made during the test program.

Tests of the composite configuration were made with the B-36 control surfaces deflected and for two positions of the horizontal tail of the F-84F models.

The B-36 was tested alone, both with and without the sting installed in the wing tips. Tests were also run with elevator deflections of 0 degrees, -5 degrees, and -10 degrees, and with the horizontal tail removed.



Preceding Page Blank

FIGURE 33 MASSIE MEMORIAL WIND TUNNEL TEST SETUP

FIGURE 34 MASSIE MEMORIAL WIND TUNNEL TEST SETUP - ATTACHMENT OF F-84 TO B-36

Data obtained from these tests were reduced by the Thieblot Aircraft Company. However, it had been found that there were errors existing in the strain gage balance and wind tunnel data. Therefore, the results of the reduced data were qualitative rather than quantitive and did not provide the information anticipated for the study and design analysis.

Thieblot Aircraft Company Report FZM-36-528, Wind Tunnel Test of Static Models of the Tom-Tom Parasite System, (Reference 27 ) gives a detailed account of the test program.

B. Semi-Span Dynamic Wind Tunnel Tests (6-27 October 1954)

Dynamic model wind tunnel tests of a 1/25-scale B-36J semi-span, cantilevered wing with a 1/25-scale RF-84F fighter attached at the wing-tip were run at the David Taylor Model Basin during the period of 6 through 27 October 1954. The B-36J model was used because it was available; structural characteristics of the B-36J, the B-36F and the B-36D are essentially identical for purposes of wind-tunnel tests such as these.

The purpose of these tests was to determine the effects of various design and physical parameters on the dynamic stability of the coupled composite configuration. Fighter roll axis skew-angle, fighter weight, bomber weight, fighter fore-and-aft position relative to the bomber wing-tip, and—to the degree possible—effects of bomber wing stiffness were the parameters investigated.

Results of the data obtained in test runs with various combinations of the above parameters lead to the following conclusions:

(1) The fighter roll axis skew-angle must be kept at or below 8* degrees in order to have a stable system throughout the B-36 speed range.

(2) A lightweight fighter is more critical than a heavy-weight fighter condition.

*It should be noted that a 15-degree skew-angle was finally chosen as the best compromise of the various criteria entering into the choice of the skew-angle. For examples: a zero or negative skew-angle (which might prevail briefly during yaw) is postively dangerous; low skew-angles mean higher stable speeds but greater amplitudes of motion with consequent greater discomfort, physically and psychically for the pilot; high skew-angles mean lesser amplitudes of motion but also lower stable speeds.

(3) The bomber weight does not have an appreciable effect on the stability of the system.

(4) Moving the fighter aft relative to the bomber wing tip is beneficial.

(5) Chordwise bending stiffness is the most important stiffness parameter.

(6) Fighter tail incidence has no effect on the stability.

The above conclusions are for the semi-span configuration and consider dynamic stability only. In the full-span dynamic model tests further consideration was given to complete model and gust effects. It appeared highly possible at this time that the yawing effects on the stability of the composite configuration would make a larger skew-angle desirable, even though the system would tend to become unstable in the higher B-36 speed ranges (see footnote on page 96)

A more detailed account of the semi-span wind tunnel tests can be found in Convair-Fort Worth Report SDG-17 Project Tom-Tom Semi-span Dynamic Model Wind Tunnel Tests, dated April, 1955 (Reference 4 ) and Thieblot Aircraft Company Report FZM-36-665 Dynamic Wind Tunnel Model, Project MX-1713, dated 6 April 1956 (Reference 25 ).

C. Full-Span Dynamic Wind Tunnel Tests (February, March 1955)

Dynamic wind tunnel tests of a 1/25-scale model B-36 with 1/25-scale model RF-84F fighters coupled at each wing-tip were run at the NACA 19-foot wind tunnel, Langley Air Force Base, Virginia during February and March, 1955.

The purpose of these tests was to determine the effects of various design and physical parameters on the dynamic stability of the coupled system with the bomber model approximating free flight as nearly as possible (see Figures 35, 36, and 37 ). They also provided a means to substantiate and extend the semi-span test results and to investigate the effects of bomber rigid body and anti-symmetric degrees of freedom.

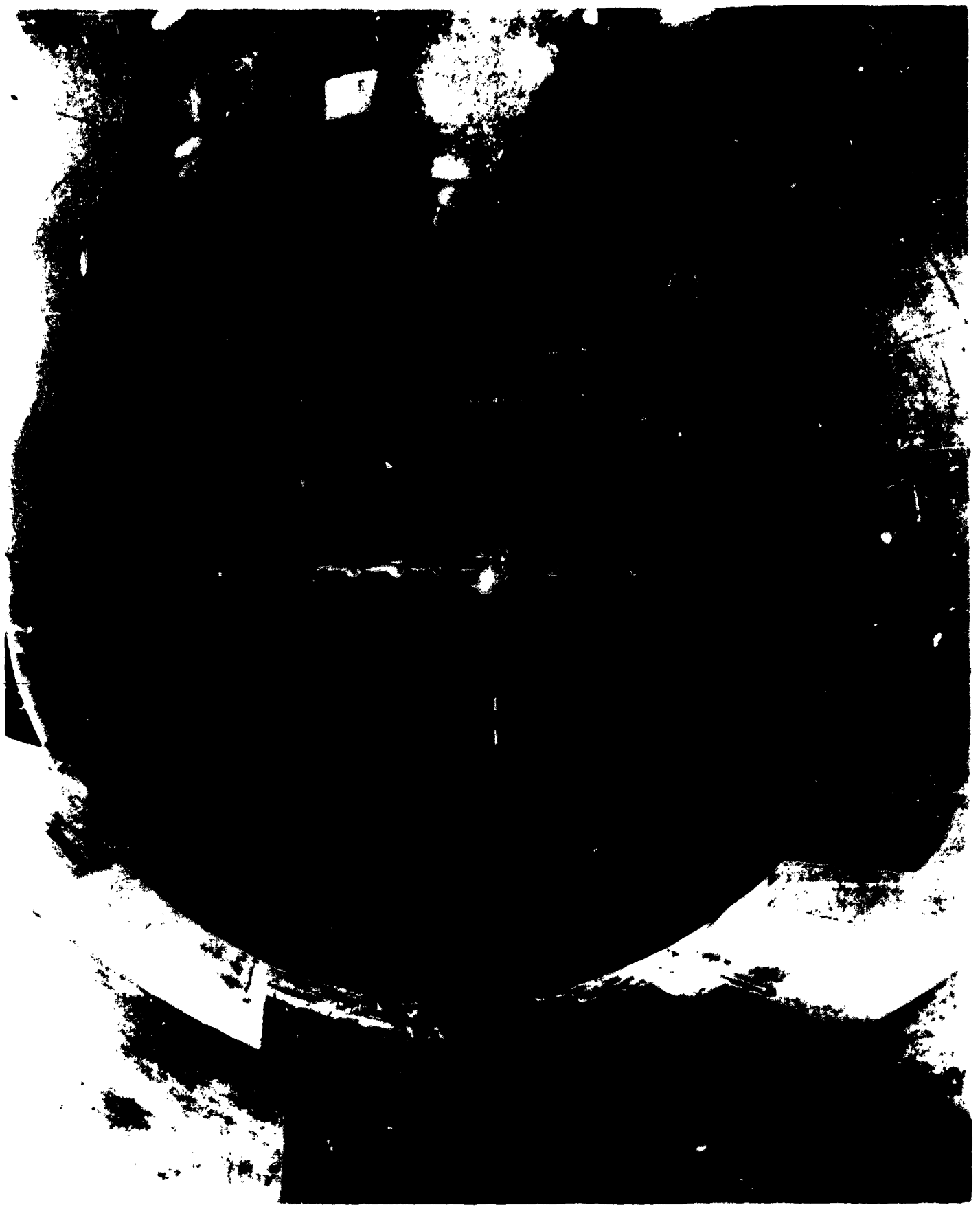

FIGURE 35 FULL SPAN WING-TIP COUPLED MODELS AT SIMULATED FLIGHT SPEED

FIGURE 36 FULL SPAN WING-TIP COUPLED MODELS AT ZERO SPEED - LOOKING AFT

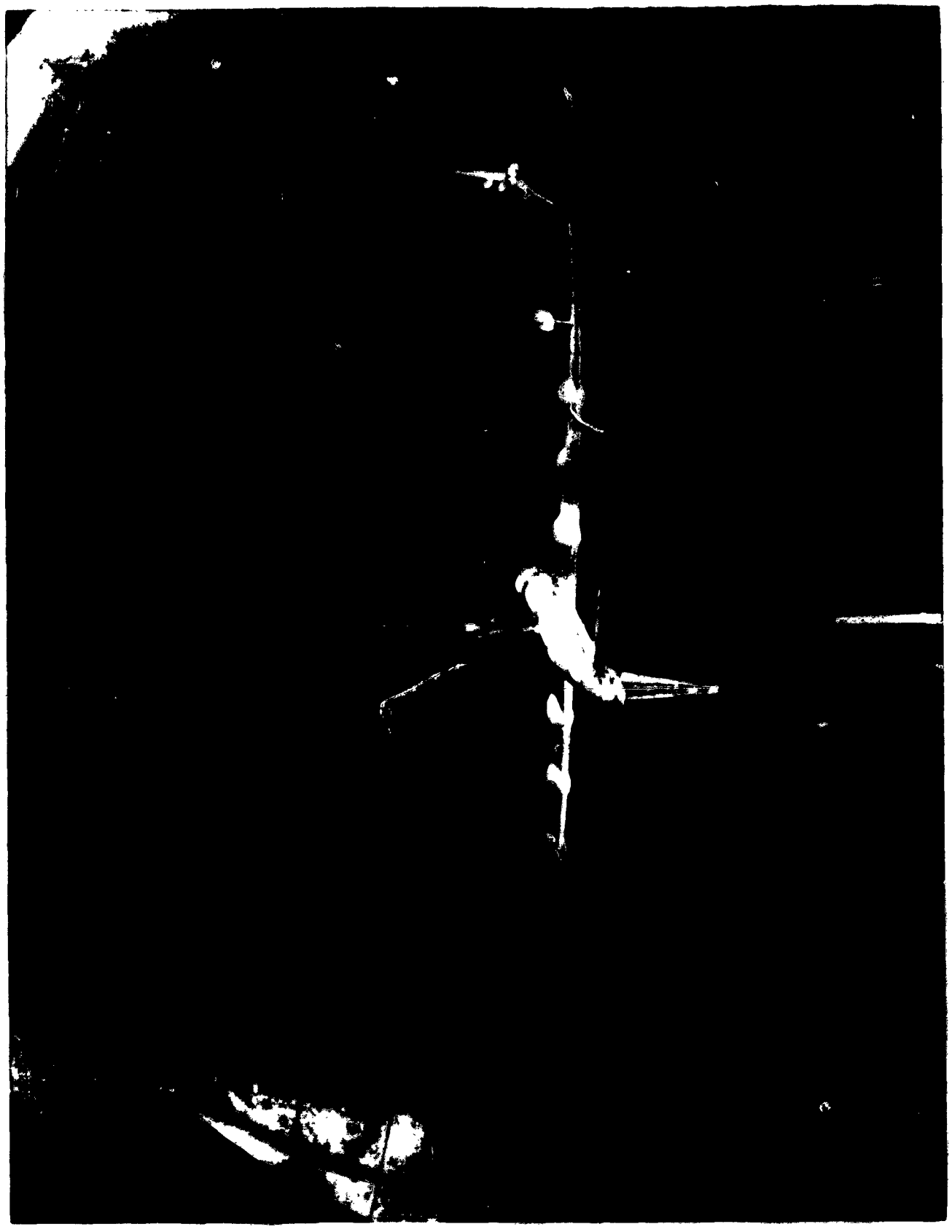

FIGURE 37 FULL SPAN WING-TIP COUPLED MODELS AT ZERO SPEED - LOOKING FWD

The composite configuration was flown in the tunnel with restraint in the drag and lateral directions only, i.e., four rigid body degrees of freedom were permitted the bomber in addition to its flexible structure degrees of freedom. The fighters were free to roll about their skewed hinge axes. No automatic stabilization devices of any kind were used. (see Figure 38). Roll skew axis angles of 8 degrees and 15 degrees, as well as fore-and-aft positions for the fighters, were tested. All combinations of bomber and fighter light and heavy weights were tested for each of these conditions. The basic bomber model stiffness simulated the B-36J model.

The data obtained in these tests resulted in the following conclusions:

(1) The fighter roll axis skew-angle should be 9* degrees or less to insure stable operation throughout the B-36 speed range.

(2) Moving the fighter aft relative to the bomber wing-tip is beneficial.

(3) For the design condition of 15-degree skew-angle, fighter aft, a speed limitation must be imposed for coupled flight. In order to maintain a 15-percent speed margin, the equivalent airspeed must not exceed approximately 230 mph for two-fighter operation.

A more detailed account of the full-span wind tunnel tests can be found in Convair-Fort Worth Report SDG-18 Project Tom-Tom Full Span Dynamic Model Wind Tunnel Tests, dated April, 1955 (Reference 5) and Thieblot Aircraft Company Report FZM-36-665 Dynamic Wind Tunnel Model, Project MX-1713, dated 6 April 1956 (Reference 25).

*See footnote on page 96.

FIGURE 38 VIEW OF FIGHTER-BOMBER COUPLING

## FLUTTER

Evaluation of the over-all analytical work early in the Tom-Tom program led to the decision that classical flutter would not be a problem. It was apparent that the frequencies involved would not be high enough to require the use of nonstationary aerodynamic terms in the stability analysis. Therefore, theoretical flutter work was not done since it was felt that it would be duplicating the basic aerodynamic stability work.

Convair-Fort Worth philosophy regarding flutter was discussed at a conference held at WADC on 14 January 1954. WADC concurred in Convair's decision that flutter investigations would not be necessary. However, it was felt that a great deal of caution should be taken in the arrangement of the wing-tip coupling because of past experiences on similar projects. It was decided that dynamic wind tunnel tests should be conducted that would give final proof of the stability of the coupling configuration being considered. A wind tunnel test program was, therefore, initiated to test both a semi-span and a full-span configuration.

Semi-span configuration tests were conducted at the David Taylor Model Basin from 6 to 27 October 1954. Full-span configuration tests were conducted in the 19-foot wind tunnel, NACA, Langley Air Force Base, Virginia in February and March 1955. In both cases 1/25-scale models of the B-36J were used, after wing-tip modification, since they were already available and were considered entirely suitable for these tests. The 1/25-scale model fighters were made by Thieblot.

Results of the wind tunnel tests confirmed Convair-Fort Worth's original philosophy that the basic problem was one of dynamic stability rather than flutter.

A summary of the dynamic wind tunnel tests is covered on page 96 of this report. Detailed accounts of these tests are covered by Convair-Fort Worth Reports SGD-17, Project Tom-Tom Semi-span Dynamic Model Wind Tunnel Tests, dated April 1955 (Reference 4 ); SGD-18, Project Tom-Tom Full-Span Dynamic Model Wind Tunnel Tests, dated April 1955 (Reference 5 ); and Thieblot Aircraft Company Report FZM-36-665 Dynamic Wind Tunnel Model Project MX-1713, dated 6 April 1956 (Reference 25).

## FLIGHT TESTS

### A. PROXIMITY FLIGHT TESTS

Since Convair pilots were to fly the RF-84F as well as the B-36, during flight testing of the prototype, two Convair pilots were checked out in the C-47/Q-14 at Wright-Patterson Air Force Base in June 1954. Both pilots were able to make successful couplings without difficulty and gained experience which was helpful in evaluating proximity flights of the RB-36/RF-84F and in making a comparison to the C-47/Q-14 system.

A mock-up coupling mechanism, Figure 39 , was completed and installed on the left-hand wing tip of RB-36F airplane Serial No. 49-2707 and on the right-hand wing tip of RF-84F airplane Serial No. 51-1848, Figure 40, in August 1954.

Prior to actual proximity flights, RF-84F airplane Serial No. 51-1848 made three flights to investigate the handling characteristics of the airplane with the coupling probe installed. Three different coupling probe jaw configurations were tested, a two-foot vertically opening jaw closed on the first flight, a two-foot vertically opening jaw open on the second flight, and a four-foot vertically opening jaw open on the third flight. These three configurations are shown by Figures 40 through 42 . Maximum airspeed on these flights was limited to the structural limitations of the mock-up installation and averaged approximately 350 mph. It was found that the coupling probe with these jaw configurations did not affect the handling characteristics of the RF-84F airplane appreciably. Stalls conducted with the mock-up configurations revealed a slight roll-off in the direction of the probe which was easy to control.

Three proximity flights were made with the RB-36F coupling mechanism mock-up boom in the extended position and the RF-84F coupling probe mock-up with the four-foot jaws open.

The first flight was conducted on 26 August 1954. Various airspeeds and approach angles were investigated. An indicated airspeed of 200 mph and an approach angle of 60 degrees from the line of flight of the RB-36F gave the best over-all results. A maximum RB-36F rudder trim setting of 4 degrees was required to

Preceding Page Blank

FIGURE 39 RB-36F COUPLING BOOM MOCK-UP EXTENDED

FIGURE 40 RF-84F PROBE MOCK-UP - 4-FOOT JAWS OPEN

FIGURE 41 RF-84F PROBE MOCK-UP - 2-FOOT JAWS CLOSED

FIGURE 42 RF-84F PROBE MOCK-UP - 2-FOOT JAWS OPEN

correct for coupling mechanism drag and the proximity of the RF-84F had only a slight effect on the RB-36F control characteristics. The RB-36F wing-tip vortex effect was quite noticeable and varied with the angle of approach of the RF-84F. However, the RF-84F pilot was able to bring the probe jaws within less than a foot of the boom receiver on several occasions

Flight No. 2 was made on 27 August 1954. Results were much the same as on the first flight, with proximity runs being made at 10,000 feet PA and 24,000 feet PA. At the higher altitude, higher airspeeds were more effective in approaching the RB-36F boom receiver. Again, no difficulty was encountered in approaching within inches of a coupled position, although no actual contacts could be made with the mock-up installation.

Flight No. 3 was made on 29 September 1954. The RF-84F was flown in proximity to the RB-36F wing tip mock-up at indicated airspeeds from 200 to 252 mph at 17,000 feet PA. The RF-84F pilot estimated that contacts could have been made on 75 percent of the simulated contact approaches. Approaches were made from above, below, and at B-36 wing tip level as well as at horizontal angles varying from 0 to 90 degrees. The optimum RF-84F approach path to the RB-36F coupling mechanism boom was found to be at the same level as the RB-36F wing tip and 30 to 60 degrees to the RB-36F line of flight. Figures 43 and 44 are in-flight photographs of the proximity flights.

In addition to the three proximity flights, proximity approaches were also made with a standard B-36 wing tip for comparison of wing-tip vortex and turbulence effects with and without the mock-up coupling mechanism. Turbulence aft of the wing tip with the coupling mechanism mock-up was more pronounced but vortex effects were less than for the standard clean wing tip

As the result of the proximity tests, it was concluded that contact of an RF-84F with the wing tip of a B-36 was feasible and could be accomplished by the average pilot without difficulty. The wing-tip coupling mock-ups on the RB-36F and RF-84F did not appreciably affect the flight characteristics of either aircraft.

A more detailed account of the proximity flight testing may be found in Convair-Fort Worth Reports F.T.I. No. 14.1-22 "Proximity Flight Test Program - Project Tom-Tom," (Reference 3 ) and FZA-36-342, "Tom-Tom Flight Test Program Summary" (Reference 14).

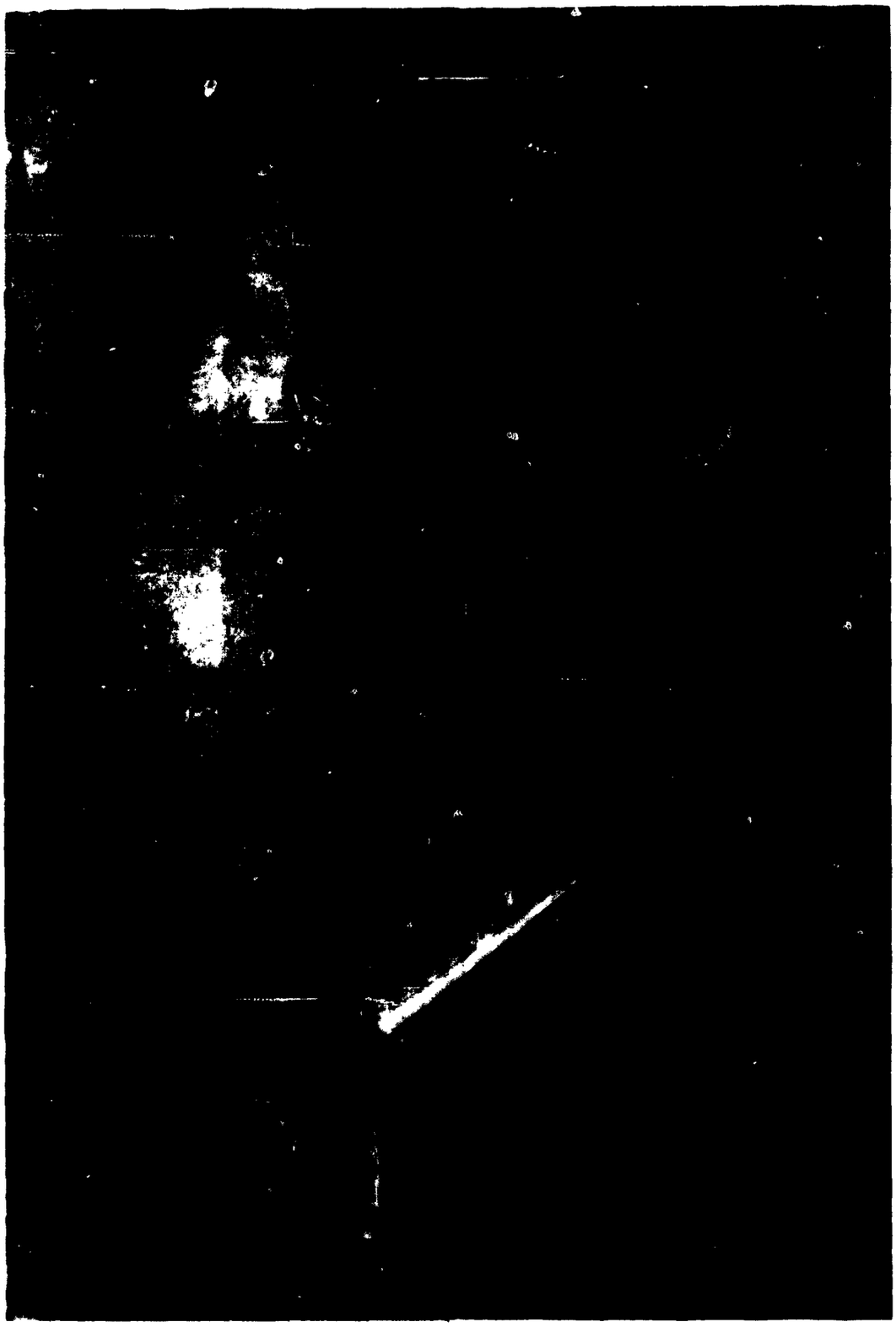

FIGURE 43 PROXIMITY FLIGHT TEST - IN-FLIGHT VIEW

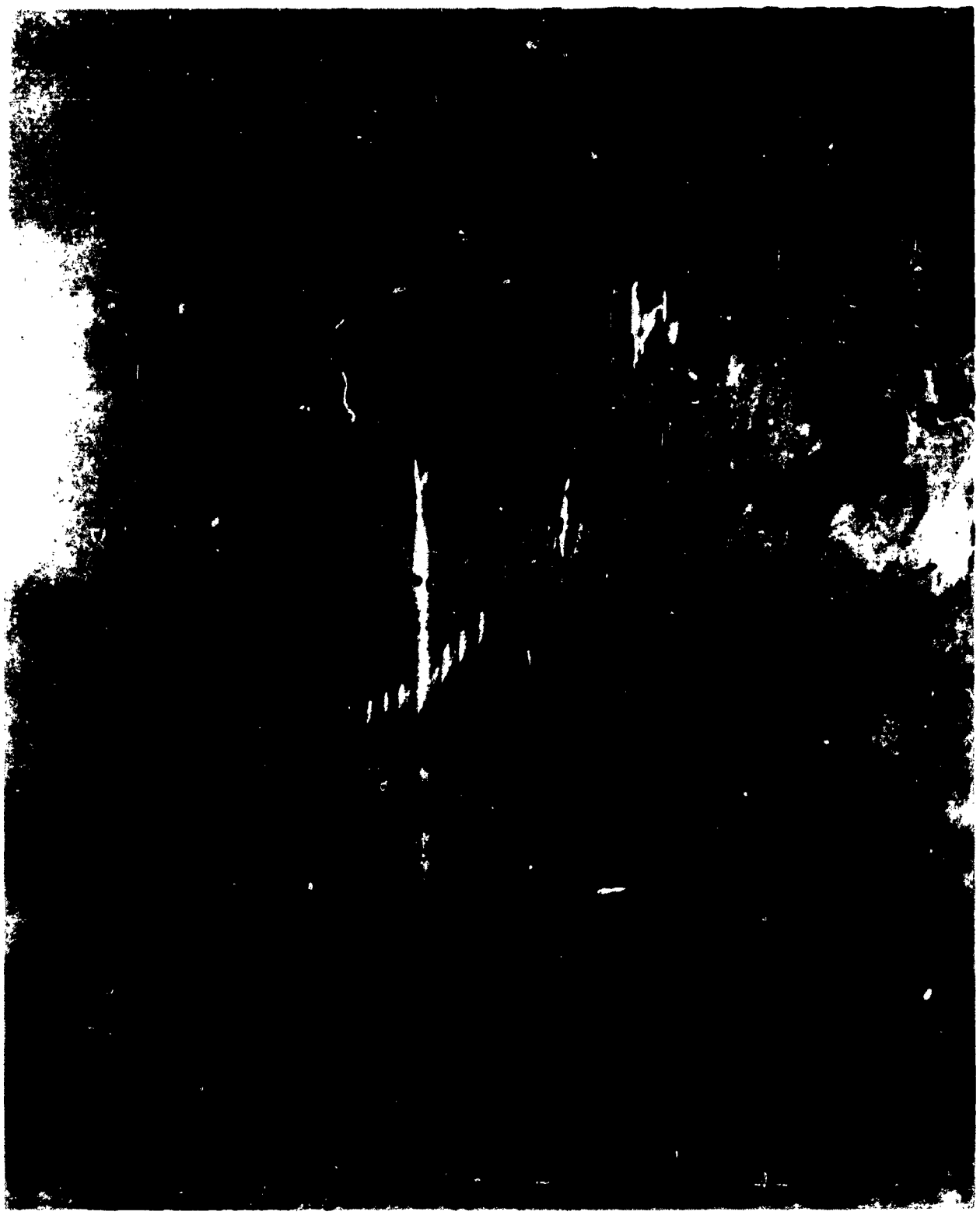

FIGURE 44 RF-84F APPROACHING RB-36F COUPLING BOOM MOCK-7

B. GROUND OPERATIONAL TESTS

To insure satisfactory in-flight operational performance of the Tom-Tom coupling mechanisms a hoisting test tower was constructed to simulate in-flight coupling and de-coupling. The tower incorporated provisions to check the following:

(1) Single-point coupling and releases, including normal and emergency releases.

(2) Roll and pitch movements while in fully coupled retracted position.

(3) Normal and emergency release of the RF-84F from the fully coupled position.

The initial phase of the ground operational testing was started in mid-December, 1955, and was completed 30 December 1955. Numerous deficiencies were brought to light. The failure of the RF-84F aft latch to release under load was the major problem. Modifications to overcome these deficiencies were completed to a point where a fit check was made late in January, 1955. Final modifications required on the RF-84F aft latch were completed and composite ground operational tests were satisfactorily accomplished late in February, 1956. Figures 45 through 53 show the hoisting test stand in operation during these tests.

Minor adjustments and changes resulting from these last tests were accomplished and the two aircraft were readied for the Development Engineering Safety Inspection held 21 and 22 March 1956. Ground operational checks were demonstrated at this inspection.

Requests for alteration resulting from the DEI Safety Inspection which were required prior to flight were accomplished and a final ground operational check was made early in April, 1956.

Many other ground operational tests were run during the prototype flight test program. These tests provided a means of determining the effectiveness and safety of changes or modifications to the coupling mechanism prior to test flights.

C. PROTOTYPE FLIGHT TESTS

A shakedown flight of the RF-84F and functional check of the coupling mechanism was accomplished on 13 April 1956. The B-36 mechanism was located on the right-hand wing and the F-84's on the

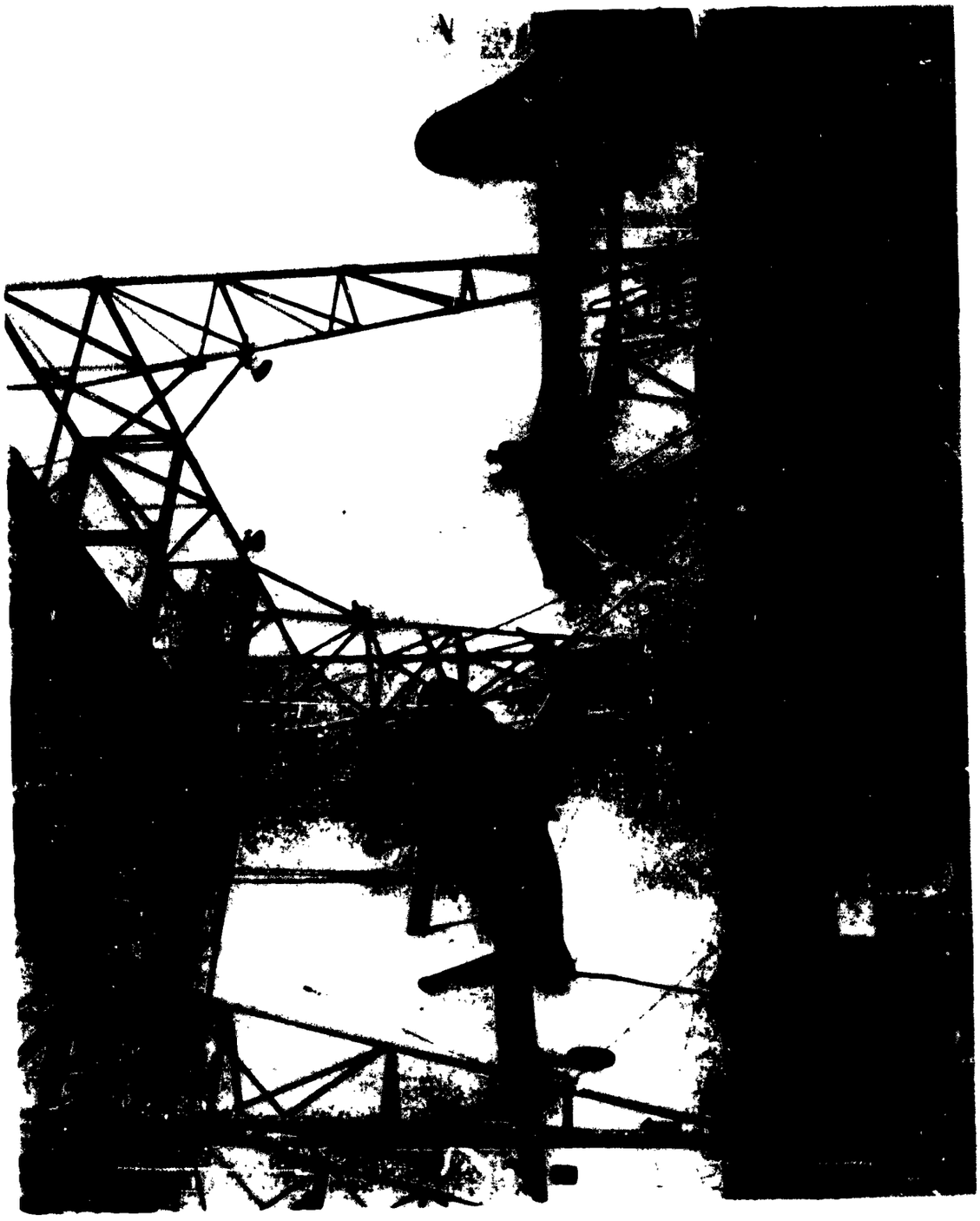

FIGURE 45 COMPOSITE GROUND TEST, RF-84F HOISTED IN PREPARATION FOR COUPLING TO RB-36F

FIGURE 46 RF-84F PROBE ADJACENT TO RB-36F HEAD PRIOR TO SINGLE POINT COUPLING

FIGURE 47 PLAN VIEW OF SINGLE-POINT ATTACHMENT RF-84F TO RB-36F

FIGURE 48 RF-84F AND RB-36F IN SINGLE-POINT COUPLED POSITION

FIGURE 49 CLOSE-UP - SINGLE-POINT COUPLED POSITION, RF-84F AND RB-36F

FIGURE 50 RF-84F AFT LATCH ADJACENT TO RB-36F RACK PRIOR TO TWO-POINT COUPLING

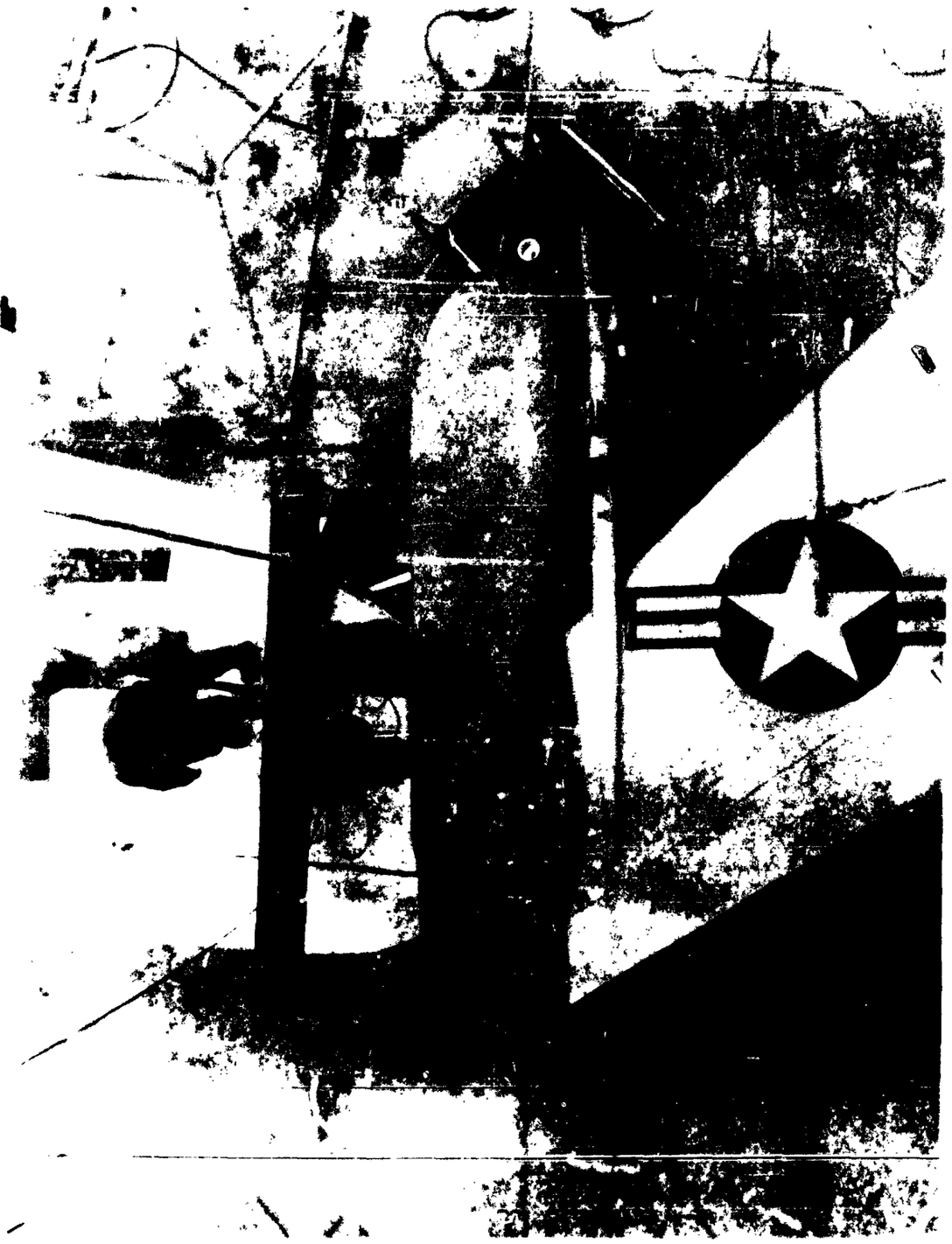

FIGURE 51 PLAN VIEW OF TWO-POINT ATTACHMENT RF-84F AND RB-36F

FIGURE 52 SIMULATED RELEASE OF RF-84F UNDER UP AND DRAG LOADS

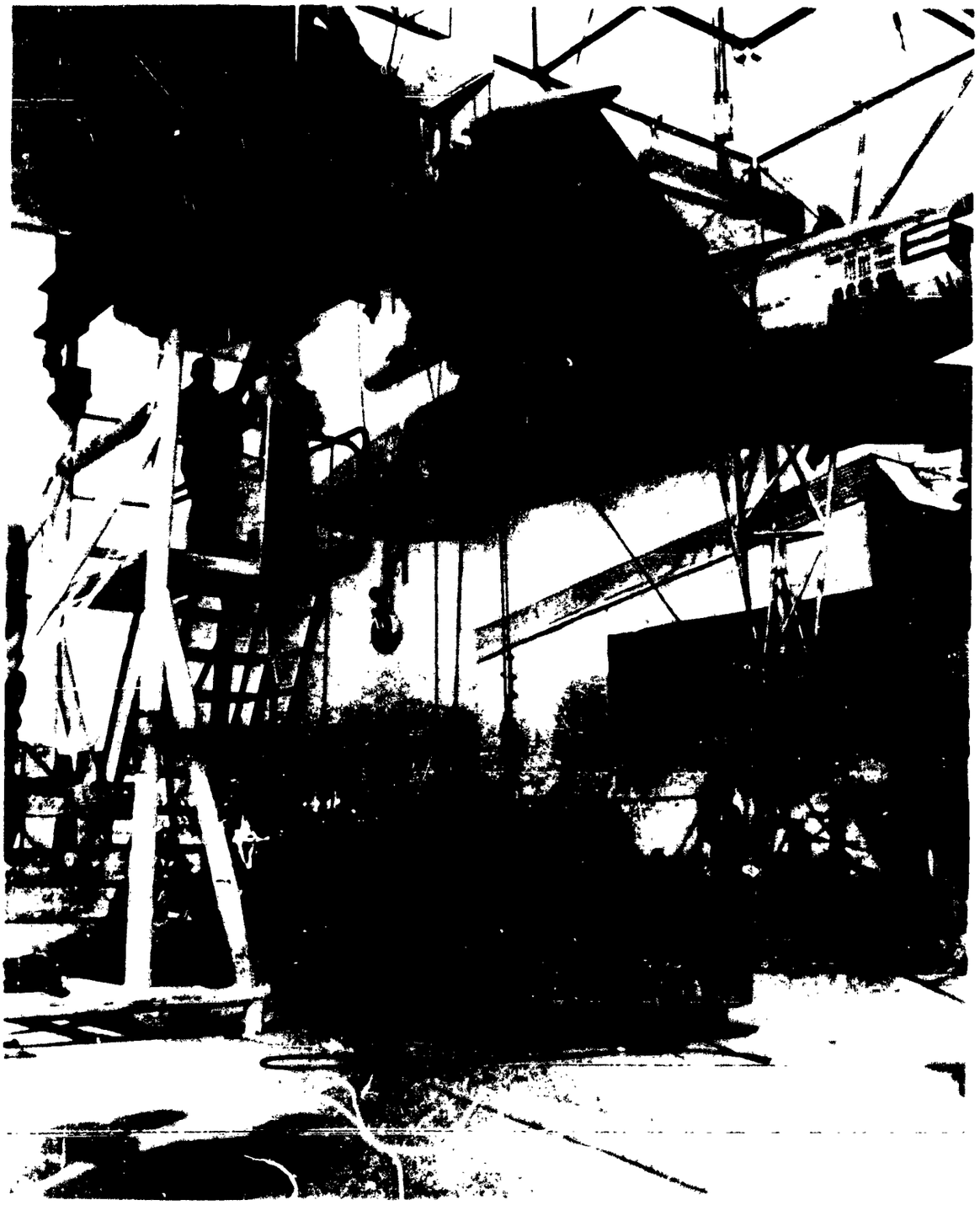

FIGURE 53 SIMULATED RELEASE OF RF-84F UNDER DOWN LOAD

left-hand wing. The handling characteristics of the RF-84F with the coupling probe installed were found to be much the same as was experienced during proximity flights. No adverse effects were noted. The coupling mechanism operated satisfactorily with the indication that only minor adjustments were required in order to make contacts.

On 14 April 1956, the first Tom-Tom prototype flight was made. A shakedown and functional check of the RB-36F airplane and coupling mechanism was satisfactorily accomplished. This was followed by proximity runs with the RF-84F to check effects of wing-tip vortices on control of the RF-84F. A vortex effect was encountered in an area which extended from abeam and about 10 feet outboard of the RB-36F wing tip to a point some 30 feet aft of the wing tip. Considerable aileron control and some extra power were required for the fighter to penetrate this area, after which power could be reduced somewhat and the RF-84F became easier to control. As the fighter penetrated this vortex area the bomber exhibited a distinct tendency to yaw left. However, these conditions posed no control problem to either the fighter or bomber pilots. Several contacts were made following the proximity runs. However, no attempts were made to latch in single-point attachment as the latches were secured in the unlatch position.

Flights No. 2 through No. 4 were accomplished between 14 and 27 April 1956. Several contacts were made, but single-point attachment was not accomplished as the forward latch was made inoperative for these flights. Difficulty was encountered with the roll release actuating the RB-36F head retraction when contact was made. This condition was corrected and the forward latch was made operative for subsequent flights.

Flights No. 5 through No. 7 were accomplished between 10 May 1956 and 25 May 1956, during which time four single-point attachments were achieved. The RF-84F was very stable in single-point attachment. Numerous deficiencies in the coupling mechanism were noted and considerable rework was accomplished in an attempt to overcome these discrepancies. ~~Figure 31 illustrates~~ the single-point attachment configuration.

Flights No. 8 through 11 were accomplished between 6 June 1956 and 8 June 1956 for the purpose of making two-point attachments with the forward latch operative and the aft yaw lock inoperative. Only one two-point attachment was made during these flights due primarily to slippage of the boom actuator clutch. This was not considered

a true two-point attachment since the yaw lock was not engaged but the puck of the pitch lock was extended and the RF-84F was held in pitch by using right rudder to maintain control against the rail and rack gear of the bomber aft latch. However, the RF-84F was towed in this configuration for approximately 23 minutes and a normal electropneumatic release was made While being towed, the RF-84F pilot flew without making control corrections. The fighter was very stable at all times and presented no control problem for either the fighter or bomber pilots. Figure 30 illustrates the two-point attachment configuration.

Flight No. 12 with the receiver and yaw locks operative was accomplished on 8 June 1956. A two-point attachment was accomplished on the first attempt and the yaw and pitch locks were engaged. The RF-84F was towed for approximately 45 minutes while locked in the two-point attachment position. Oscillations, induced by mildly upsetting the RF-84F about its pitch axis damped out in one to three cycles and the RF-84F appeared very stable. The RF-84F was flown briefly in two-point attachment with the pitch lock retracted and appeared to be somewhat more stable than at 2/3-retracted to fully retracted positions in single-point attachment. A normal bomber initiated electromechanical release was accomplished.

At the conclusion of flight No. 12, all testing was temporarily suspended because of depletion of funds. A minimum effort flight test proposal for continuation of flight testing was submitted to the AMC 23 July 1956, and was subsequently authorized 17 August 1956. The flight test program as authorized was for a two-fighter configuration without the utilities coupling incorporated. Flight testing was resumed 31 August 1956, with flight No. 13.

Flights No. 13 through No. 17 were accomplished between 31 August 1956 and 20 September 1956, with the receiver, yaw and pitch locks operative (i.e., the coupling mechanism was completely operative). The intent of these flights was to investigate the flight characteristics, stability, and structural loads of the single-fighter Tom-Tom configuration. Two successful fully-coupled attachments (with both the yaw and pitch locks engaged) were accomplished during these flights. On one of these fully-coupled attachments the RF-84F was towed for 1 hour and 20 minutes. The intent of these flights was accomplished to the degree possible with only two contacts having been made. Results obtained indicated the

RF-84F to be stable under all conditions investigated (subsequent stability analysis showed the configuration to be only neutrally stable in one oscillatory mode at the highest test speed). Failure to make additional contacts during these flights was attributable to loss of radio contact, maladjustment of the roll release, and malfunction of the yaw lock mechanism. Figure 54 is an in-flight photograph of the RF-84F in the fully-coupled attachment.

Flight No. 18, the last flight to be made prior to termination of flight testing, was accomplished on 26 September 1956. The intent of this flight was the same as for previous flights No. 13 through No. 17. Several attempts were made to lock in single-point attachment. On the fourth attempt, a single-point attachment was accomplished. However, fighter roll oscillations started immediately and increased in amplitude so that on the third cycle a wing-up attitude of 20 degrees was reached with heavy buffeting occurring and the pilot could no longer control the airplane.

As the RF-84F rolled down, the pilot initiated release which occurred at a wing down attitude of 30 to 45 degrees accompanied by shuddering of the RB-36F bomber. As the fighter left the bomber the head assembly of the RB-36 fell free. It is not known whether release was the result of initiation by the RF-84F pilot or due to the automatic roll release mechanism. The damage was not extensive enough to prevent either airplane from making safe and uneventful landings. Post-flight investigation revealed major damage to the coupling mechanism of both aircraft as well as a considerable amount of structural damage to the wing tips of both aircraft. Figures 55 and 56 are in-flight pictures showing the failure as it occurred. Figure 57 is a summary of operations during the flight test program.

For more detail on flight No. 18 test flight see Convair Reports FZA-36-342, "Tom-Tom Flight Test Program Summary," Reference 14 and FZM-36-1192, "Project Tom-Tom Report of Test Flight 18 Plus Convair's Recommendations Regarding Continuation of Project," Reference 18.

All subsequent flight testing was cancelled on Convair-Fort Worth's recommendation that the program be terminated at this time. This recommendation was based on a careful consideration of what could be gained by additional test flights versus the risk to personnel, and cost in money, time, and effort.

A more detailed account of the flight test program is given in Convair-Report FZA-36-342, Reference 14.

FIGURE 54 RF-84F AND RB-36F IN FULLY COUPLED ATTACHMENT

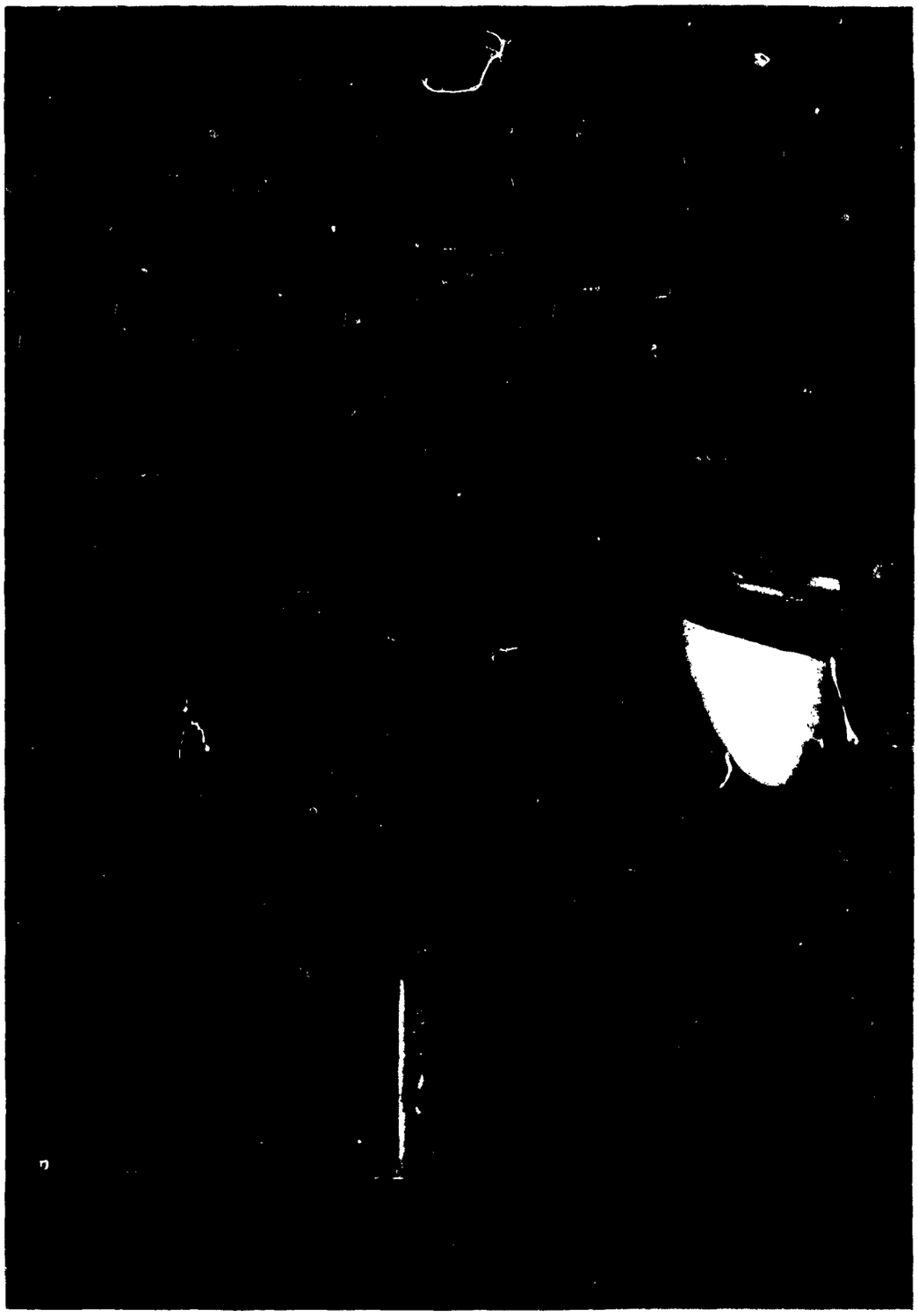

FIGURE 55 RF-84F AND RB-36F SHOWING FAILURE OF BOMBER HEAD ATTACHMENTS DURING FLIGHT NO. 18

FIGURE 56 RB-36 HEAD FALLING FREE SHORTLY AFTER FAILURE OF HEAD ATTACHMENTS DURING FLIGHT NO. 18

SUMMARY OF OPERATIONS
TOM-TOM FLIGHT TEST PROGRAM

| FLIGHT | DATE | IAS MPH | IAS KNOTS | PA FEET | RB-47 HRS | RB-47 MIN | F-84F HRS | F-84F MIN | SINGLE-POINT ATTACHMENT CONTACTS | SINGLE-POINT COUPLED | DURATION MIN | DURATION SEC | FULLY COUPLED ATTACHMENT COUPLED | DURATION MIN | DURATION SEC | RELEASE FIGHTER NORMAL | [illegible] | [illegible] | SQUIB | AUTO. ROLL | REMARKS |
|---|---|---|---|---|---|---|---|---|---|---|---|---|---|---|---|---|---|---|---|---|---|
| [illegible] | [illegible] | [illegible] | [illegible] | [illegible] | [illegible] | [illegible] | [illegible] | [illegible] | [illegible] | [illegible] | - | - | - | - | - | - | | | - | - | Pilot orientation |
| [illegible] | [illegible] | [illegible] | [illegible] | [illegible] | [illegible] | [illegible] | | [illegible] | [illegible] | [illegible] | - | - | - | - | - | - | | | - | - | Action of automatic Roll Release prevented hook-up |
| [illegible] | [illegible] | [illegible] | [illegible] | - | | | | [illegible] | - | - | - | - | - | - | - | - | | | - | - | Test was aborted |
| [illegible] | [illegible] | [illegible] | [illegible] | 15,000 | [illegible] | [illegible] | [illegible] | [illegible] | [illegible] | [illegible] | - | - | - | - | - | - | | | - | - | Receiver latches blocked open |
| [illegible] | [illegible] | [illegible] | [illegible] | [illegible] | [illegible] | [illegible] | | [illegible] | [illegible] | [illegible] | - | - | - | - | - | - | | | - | - | Head stuck at 45° roll angle |
| [illegible] | [illegible] | [illegible] | [illegible] | [illegible] | [illegible] | [illegible] | | [illegible] | 14 | [illegible] | [illegible] | [illegible] | - | - | - | X | | | - | - | Fighter made two flights Aileron and Stabilator Effectiveness checked |
| [illegible] | [illegible] | [illegible] | [illegible] | [illegible] | | [illegible] | [illegible] | [illegible] | 16 | [illegible] | [illegible] | [illegible] | - | - | - | X | | | - | - | Sheared pitch centering pin |
| [illegible] | [illegible] | [illegible] | [illegible] | [illegible] | [illegible] | [illegible] | | [illegible] | [illegible] | [illegible] | [illegible] | [illegible] | - | - | - | X | X | | - | - | Could not retract fighter into two-point because of slipping boom actuator clutch fighter response sluggish |
| [illegible] | [illegible] | | | | | | - | - | - | - | - | - | - | - | - | - | | | - | - | Flight was aborted |
| [illegible] | [illegible] | [illegible] | [illegible] | [illegible] | | [illegible] | | [illegible] | [illegible] | [illegible] | [illegible] | 20 | - | - | - | X | X | X | X | - | Slipping boom actuator clutch prevented retracting fighter into two-point position. |
| [illegible] | [illegible] | [illegible] | [illegible] | [illegible] | | | | [illegible] | [illegible] | 1 | | | ① | [illegible] | [illegible] | X | - | - | - | - | Stability checks |
| [illegible] | [illegible] | [illegible] | [illegible] | [illegible] | | [illegible] | [illegible] | [illegible] | [illegible] | [illegible] | | | ② | 1 | 45 | - | | X | - | - | Stability checks |
| [illegible] | [illegible] | 210 | [illegible] | [illegible] | [illegible] | [illegible] | [illegible] | [illegible] | [illegible] | - | | - | - | - | - | - | - | - | - | - | New pilot orientation |
| [illegible] | [illegible] | [illegible] | [illegible] | [illegible] | [illegible] | [illegible] | [illegible] | [illegible] | [illegible] | 1 | - | - | - | - | - | | - | | - | X | Released during retraction |
| [illegible] | [illegible] | [illegible] | [illegible] | [illegible] | [illegible] | [illegible] | [illegible] | [illegible] | [illegible] | 1 | | | ② | [illegible] | [illegible] | X | - | - | - | - | Stability checks |
| [illegible] | [illegible] | [illegible] | [illegible] | [illegible] | [illegible] | [illegible] | [illegible] | 30 | - | 1 | | | ②③ | [illegible] | [illegible] | X | - | | - | - | Stability checks |
| [illegible] | [illegible] | [illegible] | [illegible] | [illegible] | [illegible] | [illegible] | [illegible] | [illegible] | [illegible] | 1 | - | - | - | - | - | - | X | - | - | - | Damaged fighter fairing |
| [illegible] | [illegible] | 213 | [illegible] | [illegible] | 1 | 05 | [illegible] | 50 | [illegible] | 1 | [illegible] | [illegible] | - | - | - | - | - | - | - | - | Damaged mechanism extensively |

| AIRCRAFT | FLIGHTS | GROSS WT. & T.O. | M.A.C. & T.O. |
|---|---|---|---|
| RB-47B | [illegible] | [illegible] | [illegible] % |
| | [illegible] | [illegible] lb | [illegible] % |
| | [illegible] | [illegible] lb | [illegible] % |
| F-84F | [illegible] | [illegible] | [illegible] % |

NOTES:

① Yaw lock of aft latching mechanism was secure open. Flight rudder was used to provide restraint in yaw and to keep the pitch lock engaged, thereby providing pitch restraint.

② Both yaw and pitch locks engaged, providing restraint in both yaw and pitch.

③ Pitch lock was retracted for about 5 minutes; pitch lock only provided pitch restraint.

FIGURE 57 – SUMMARY OF OPERATIONS

SECRET



SECRET

## STRUCTURES

### A. STRUCTURAL CRITERIA

The criteria for structural design was established by Convair Report FZS-36-306, "Structural Design Criteria, RB-360/RF-84F Composite-Wing-Tip Coupling," dated 29 December 1953 and last revised on 22 July 1954 (Reference 2 ).

This report set forth the basic parameters and their ranges, such as speeds, altitudes, gust velocities, gross weights of carrier, gross-weights of parasite, etc. It could not - and did not attempt to - establish loads, or even indicate the methods by which to determine loads. Convair leaned quite heavily on its past experience with - and design criteria for - the Ficon parasite system in writing this criteria (see FZS-36-304, "Structure Design Criteria for Production Ficon Installation," 7 October 1953, Reference 33 ).

It was recognized that Thieblot Aircraft would very likely have to develop new techniques to determine the finite design loads based on the critiera, since these loads would undoubtedly involve unique dynamic response characteristics. No design loads were ever developed by Thieblot and Convair was forced to provide them with arbitrary design loads in order that actual structural design of the system might begin. These arbitrary loads were supplied by Convair in January 1955.

### B. STRUCTURAL DESIGN

The redesign of the B-36 and RF-84 wings, as well as the design of the coupling mechanisms on both aircraft, was done entirely by Thieblot. Actual fabrication of the parts to Thieblot drawings was done by Convair. The designs successfully withstood limit design loads with one minor exception which was easily corrected (see page 62 ).

The reinforcements made to the wings of the B-36 and the F-84 are explained on pages 45 and 47. The stress analyses on these changes are contained in FZM-36-527, Volume I, for the B-36 and Volume II for the F-84 (Reference 20).

The design of the coupling mechanisms is explained in the Design Section of this report, pages 19 through 45. The stress analyses of these designs are contained in FZM-36-527, Volume III, for the B-36 and Volume IV for the F-84 (Reference 20 ).

C. STRUCTURAL DEVELOPMENT TESTS

To the best of Convair's knowledge no tests were made at Thieblot to ascertain optimum structural design or to check allowable stresses used in the design. Convair made none.

However, all critical design limit loads were applied to the actual flight articles. These tests are covered under the "Proof Loading and Spring Rate Testing" section of this report.

D. FLIGHT LOADS

1. Theoretical Flight Loads

Once the coupling mechanism basic configuration had been established as "free in roll about a hinge line skewed 15 degrees with respect to the forward direction of the airplane," it was possible to make real headway in establishing design loads based on the criteria set forth in FZS-36-306 (Reference 2 ). The dynamic loads studies and the stability studies went hand-in-hand because the dynamic loads could be derived from the equations of motion used in the stability studies.

First things coming first, early studies of these equations were directed toward answering the question "If this configuration dynamically stable, and if so, at what speeds?" After this question had been answered, (at least to the extent of deciding to proceed with the flight test program) and as that program drew nearer, interest in predicted flight loads quickened.

Accordingly, both Convair and Thieblot accelerated their programs to predict flight loads from the equations of motion which each had developed - Convair using La Grangian-type equations and Thieblot matrix-type equations. The Convair work was done on the analog computer equipment at the Convair, Pomona Division during the period 2 April 1956 to 2 April 1956. The Thieblot work was done at W-PAFB, Ohio on digital computer equipment made available by the Air Force.

The net results of these loads studies were the same: the system would not tolerate gusts approaching the design gust without instigating dynamic motions which caused the fighter to experience dangerous flapping and other more complex coupled motions, or without exceeding design loads, or both. That is, in even moderately turbulent air the pilot could not fly the fighter "hands off," without running the risk of real trouble.

Because of the necessary simplifications in the equations of motion, and the consequent hesitancy in accepting their predicted results at face value - and because of the time, money, and effort spent on the project up to this point - it was considered desirable to continue with the flight test program as planned. Moreover, it was believed that the advancement of the "state-of-the-art" to be gained by flight test experience more than offset the small additional cost and relatively small element of risk involved.

One of the more valuable products of the EAC studies was the graphic presentation of the motion and time relationships. This relationship was not properly integrated with pilot-reaction time and coupling-release time in the thinking that went into the design and later, it proved, into the test flights.

For a fuller presentation of the dynamic loads' studies made by Convair see Report FZS-36-490, 21 December 1957 (Reference 17 ). For a presentation of the dynamic loads' studies made by Thieblot see Report FZM-36-526, "Structural Loading Analysis, Project MX-1713," Reference 19.

Except for flight No. 18, and the drag load for flight No. 12, loads experienced during flight tests did not exceed more than 60 percent of limit design loads. (The mechanisms and aircraft had been tested to limit design loads, see section on Proof Loads and Spring Rate Testing, page 59.)

For a fuller presentation of measured loads experienced during flight testing, see Convair Report FZS-36-490.

2. Actual Flight Loads

No attempt was made to correlate measured flight loads and predicted flight loads. In the first place the inputs on the EAC were different from those created in flight; and, in the second place, it was difficult enough to keep the flight program moving along with a satisfactory level of accomplishment on a limited budget with the added burden of correlating measured and predicted flight loads.

## CONCLUSIONS AND RECOMMENDATIONS

This topic will be covered in three parts - each complete in itself:

I. Stability and Control
II. Detail Design of the Tom-Tom Configuration
III. A Critique of Tom-Tom As An Over-all Effort

### I. STABILITY AND CONTROL

#### A. CONCLUSIONS

1. A primary factor affecting the practicability of wing-tip coupling is the stability of the fully-coupled arrangement.

2. It is believed that the Tom-Tom program has demonstrated that the skewed-axis concept is a satisfactory solution to the problem of stability for the wing-tip coupling and wing-tip towing arrangement.

3. Although the flight program was prematurely concluded because of accidental damage to the coupling mechanism of both aircraft, sufficient flight data was obtained prior to this incident to enable conclusive correlation between analytical and flight results. These conclusions and correlations follow:

   a. The flight results and the analytical results exhibited identical trends; the instability speeds differed by only 22 mph.

   b. Frequency and damping discrepancies were not unreasonable, considering the assumptions of the analysis.

   c. Correlation was possible only for the case where one fighter was attached to the bomber (the flight test program never got beyond the single-fighter configuration), and the assumptions of the analysis were particularly unrealistic in this case because of practical limitations to the number of degrees of freedom that could be considered.

Preceding Page Blank

4. It is felt that the basic nature of the problems associated with the skewed-axis concept have been successfully defined analytically and correlated with wind tunnel and flight data. As a result, future efforts of this type can proceed with greater confidence, and more reliance can be placed on the analytical approach in effecting a suitable design arrangement.

5. The analytical approach to the stability problem developed in this project can be applied with confidence to other skewed-axis systems. The equations of motion developed might require modification before application to another system with its individual characteristics.

6. Wind tunnel tests utilizing dynamically similar models can be expected to simulate reasonably well actual flight vehicle response.

7. In single-point coupling the Tom-Tom configuration was unstable but controllable. The instability was one of pure divergence.

8. Simulator studies proved valuable (and reasonably accurate) in evaluating pilots' abilities to control the unstable characteristics of the single-point configuration. The flight system proved somewhat more easily controlled than the simulator system, presumably because pilot sensitivity to the airplane motions enabled him to compensate with the correct control somewhat sooner than on the simulator where there was no feel involved - only visual observation of the trace of simulated motion.

9. Aeroelastic effects are of prime importance and tend to restrict the range of parameters wherein inherent stability is obtained.

10. Static trim-out of the fighter can be defined by fighter roll angle and vertical load at the rear-point attachment. Trim is affected by airspeed, bomber angle of attack, fighter gross weight, fighter tip tank configuration (on, fuel in tank, off), fighter aileron deflection, fighter elevator deflection, fighter flap deflection, and fighter rear-point attachment position (vertically). It is most sensitive to

rear-point elevation. The rack and puck arrangement (on bomber and fighter, respectively), when coupled with fighter elevator setting, provide ample adjustment to permit trim to almost any desired fighter roll angle or rear-point attachment load.

11. The Tom-Tom design proved quite satisfactory from the standpoint of trimming for a particular flight configuration.

12. The aft yaw latch mechanism design worked quite satisfactorily once the fighter aft latch point positioning mechanism was improved.

13. The "puck" (or gear segment) and rack for adjusting and fixing pitch attitude proved quite satisfactory.

B. RECOMMENDATIONS

1. For improved theoretical results more attention should be given to the accuracy of input data, i.e., derivatives, interference, spring rates, geometrical characteristics (such as wing sweep), etc.

2. For future projects of this type, it is recommended that careful consideration be given to the structural and geometrical characteristics of possible aircraft before a final selection is made and a design study undertaken. Of particular importance in this regard are the structural rigidity and the wing sweep. The latter is of special importance in the fighter aircraft as it appears that an airplane with a mildly swept wing has stability advantages over a comparable airplane with a highly swept wing; in addition, it will be possible to make the coupling mechanisms more compact - thereby reducing flexibility. The larger span associated with the low sweep will improve the skewed-axis stability, and performance characteristics of the composite should be better because of a higher combined ratio and the "cleaner" design afforded by smaller coupling arrangements and their attendant fairings. In order to define some of these effects more accurately a generalized study should be accomplished and the most efficient planforms determined.

3. For more reliable wind tunnel results it is recommended that particular attention be given to accurate simulation of significant aircraft and coupling mechanism spring rates (e.g., the bomber coupling mechanism was found to have a spring rate of the same order as the bomber wing, whereas in the early analytical studies the spring rate of the mechanism was assumed to be essentially infinite).

4. Careful attention should be given to the methods of exciting vibratory motions of the fighter - in both the wind tunnel testing and in the flight testing. It may be desirable and necessary to use more than one standard method of excitation in order to assure exciting the primary modes of the composite and, also, to invite maximum coupling effects between them. Best correlation between wind tunnel and flight results will be possible with comparable methods of excitation. Standard methods of excitation will also insure good quantitative flight data amenable to systematic interpretation.

5. Although Convair and Thieblot carried on parallel stability studies, each using a different analytical approach, it is not necessary that such be done. Convair used a 4-degree-of-freedom system, whereas Thieblot used a 5-degree-of-freedom system. Comparisons of the two studies showed identical trends; the numerical differences were not significant when the difference in degrees-of-freedom is considered.

6. The complexity to include in an analytical approach must be a compromise between gains to be realized and the cost of the approach in time and effort.

7. The following are Convair's recommendations, based on the experience gained from the Tom-Tom program, as to how present and future efforts paralleling that at Convair could be directed to best support the floating panel concept.

   To provide needed static stability to the wing-tip coupling concept, two basic ideas have been advanced:

   a. The skewed-axis arrangement utilized in the Tom-Tom program, and,

   b. The geared-flap arrangement in the Beech Aircraft Company Long-Tom program.

The two approaches are basically similar, and and it is expected that comparable systems of each type having the same degree of static stability will exhibit essentially the same dynamic characteristics. The primary differences to be expected in these two approaches would arise due to the nonlinearities occasioned by the skewed-axis arrangement. This similarity leads to the conclusion that data obtained from one system can be applied to estimate first order effects on the other system. Thus, the flap gain (or flap-angle-to-roll-angle gearing ratio) can be compared to the value of the skew angle. The two would produce approximately the same effects when the restoring moment, due to roll angle, is the same. These considerations suggest the possibility that some of the aims of the Tom-Tom program that have not yet been realized may be effectively covered in a more efficient manner by an extension and amplification of the Long-Tom program.

A broader range of variables having more direct application to the floating panel concept can be obtained by a continuation of the Long-Tom program with the following approach:

a. Perform analytical stability studies to predict dynamic stability characteristics as a function of speed, flap gain, loading, etc. An approach paralleling that used in the Tom-Tom program is suggested. It will be found that for a given flap gain and configuration, a point of instability will be reached as the speed is increased. This is comparable to the effects obtained with a fixed skew angle. Thus, by varying the gain over a range, the effect of a varying skew angle is effectively defined, if such a comparison is of interest. Calculations could consider the case of only one panel attached as well as that of two panels.

b With suitable instrumentation, perform a flight test program to substantiate the results of the analytical calculations. This could be accomplished by stabilizing on a given speed and varying the flap gain through a range up to the instability point. This would give results

comparable to varying the skew angle at that particular speed. Results would then be repeated at other speeds.

c. Correlate the analytical and flight test results and determine what modifications to the analytical approach, if any, are required to improve the agreement.

The above procedure could first be carried out on the presently available flying article and then repeated with various modifications, if desired. Some of the possible modifications are as follows:

a. Structural Elasticity - The three major items involved are the rigidity of the attachment mechanism, the floating panel, and the wing of the parent airplane. All of these should be varied and the test results correlated with theoretical answers. This work is interrelated with recommendations b. and c. below.

b. Larger Panel to Airplane Ratio - The trend in design at present is the use of low aspect ratio supersonic airplanes with large floating panels for subsonic cruise. This very definitely emphasizes the stability and maneuverability of the total configuration as well as the stability of the panel. The ratio of panel size to airplane size should be varied together with the ratio of panel mass to airplane mass.

c. Swept Configurations - Tactical use of floating panels indicates an advantage in using swept configurations for high subsonic cruise. Thus, a comparison of the stability characteristics of swept and unswept panels and wings will be useful as well as a knowledge of the problems associated with each.

d. Flight Control - This investigation involves the installation and testing of several types of stabilization and/or control systems. The primary purpose of these investigations would be to determine what functional arrangements provide the best handling qualities for the combination. For example, several types of command signals from the pilot's

wheel to the panel could be studied. The response of the combination with various displacements, rates, and acceleration feedbacks from the panel, the airplane, the relative roll angle, etc. would be determined. The secondary purpose would be to establish what part of the stabilization and/or control system can be made all-mechanical and what parts must rely on electronic-servo type systems.

e. Separation - The investigations and analysis of the problems of separation should include both the programming of the flight path of the parent airplane as well as that of the panel. A few suggestions toward separation techniques are as follows (it is very likely that different panel configurations will require different separation techniques):

1. Provide the necessary control settings to cause the panel to assume a roll-up attitude of 10 to 20 degrees before release, providing sufficient down elevator upon release to cause the panel to dive out and down from the parent airplane. Care should be taken to insure that the release mechanism will operate under asymmetric load conditions.

2. Trim the panel for gliding flight in free air at the speed of release and provide a mechanism to shove the panel away (panel will probably assume a droop position while still attached).

3. Incorporate a device to set in a given amount of rudder and elevator deflection to cause the panel to yaw, roll, and dive away at the instant of release.

4. Make the panel so that it is aerodynamically unstable when released.

5. Incorporate a drag device on the outboard tip of the panel to be actuated at the instant of release.

6. Panel trimmed to glide at release speed with a small drag chute attached at the center of the panel and actuated at the instant of release. If the roll and angle at release is small, it is expected that the lateral motion of the panel will not develop soon enough to cause collision with the airplane.

The above remarks cover investigations that would be valuable to the art of floating panel development. It is apparent that a great amount of work could be done on the floating panel concepts. Since all of these variations could not be covered practically by flight test methods, the need for early substantiation of an analytical approach is clearly defined. It is very likely that many of the variations in configuration can be satisfactorily investigated analytically. Therefore, it would be necessary to conduct substantiating flight tests for limited cases only. In addition, it would be necessary to conduct flight tests in order to obtain information on those items which cannot be satisfactorily handled analytically - such as flyability, release, etc.

## II. DETAIL DESIGN OF THE TOM-TOM CONFIGURATION

### A. CONCLUSIONS

1. The entire program suffered from a multiplicity of design shortcomings The over-all coupling scheme was basically sound but the actual design indicated in many cases a lack of practical experience, a lack of foresight, and apparently a lack of thought and conscientious effort.

2. The wing-tip coupling mechanism as developed and flight tested in the Tom-Tom program is not considered satisfactory for tactical use and was barely acceptable for test flying. It appeared that a new difficulty and a new shortcoming were uncovered on virtually every test flight. The extent of rework necessary before the coupling mechanisms as designed were acceptable as flight test articles is covered under the DESIGN section of this report.

3. Coupling of the RF-84F to the B-36 in turbulent air cannot be successfully accomplished with the coupling mechanisms developed and tested. From the experience gained in the Tom-Tom program, and from past experiences with wing-tip coupling, it appears questionable that hook-up in more than mildly turbulent air can be accomplished regardless of the design of the coupling arrangement.

4. The unfortunate experience of the last test flight points to the requirement for a def n'te procedure for immediate release of the parasite from the carrier in any abnormal situation. In order to avoid danger to aircraft and personnel it is necessary that de-coupling occur before loads are induced which exceed the design limit loads of the configuration. This "safety valve" de-coupling can be accomplished by a "fail safe" feature designed for the mechanism, or by an established procedure for firing squibs at any time the fighter parasite is not under full control. Perhaps a combination of the two, wherein an excessive roll angle automatically fires squibs and insures positive release, is the best system. Although the Tom-Tom design incorporated an automatic roll release when the roll angle exceeded a specific amount, the incident of the last test flight clearly indicated

that the time required for this particular release mechanism to operate exceeded safe limits. Experience with the Tom-Tom program demonstrated that squib release was the one sure, effective, and quick method of release.

A virtually fool proof "safety valve" type release is considered mandatory regardless of the type of automatic flight control that might be incorporated in the parasite fighter - be it skew-angle or be it some corrective control device.

5. Some slight elaboration of certain design shortcomings will be made here:

a. Features incorporated in the design to assist the fighter pilot in making initial coupling contact (single-point) were barely acceptable in smooth air - despite the fact that the objective had been to create a design that would permit coupling in moderately turbulent air without precision flying by the fighter pilot.

The initial aim, as established during discussions with Convair test pilots after checkout on the C-47/Q-14 project, had been to create a coupling target - which if hit would result in successful coupling - of approximately 4 feet x 4 feet. Physically speaking, this was provided, horizontally by the back face of the bomber boom and vertically by the spread of the fighter jaws. Practically speaking the target area never exceeded 10 inches x 10 inches, even after the several very real improvements made during the flight test program.

The fighter pilot found it virtually impossible to slide the spool along the bomber boom and into the head. In those cases where he was able to slide the spool along the boom (only after lubricant had been liberally applied to the faying surfaces) the direction of fighter motion established by the boom was such as to cause the spool to hit outboard of the forward latch centerline and engagement could not occur.

The wide-opening jaws never had any value beyond serving, perhaps, as a visual assist to the pilot in judging his location relative to the bomber coupling mechanism. If, at initial contact there should be a vertical mis-match of, say two feet, it is necessary that one (or a combination of both) of two things occur:

(1) The bomber wing must deflect the amount of the mis-match, or

(2) The fighter must be lifted (or lowered) the amount of the mis-match.

If the fighter closing speed is appreciable, say 3 feet per second, the forces involved are quite sizeable. The bomber receiver head had the requirement that it be capable of swiveling like a universal joint. Actually, two intersecting axes of rotation were provided - one permitting pitch and one permitting roll.

Any vertical load not applied at the intersection of the axes would tend to roll the head about one or both axes - and it often did, thus making coupling impossible. Convair incorporated a feature which permitted a few degrees of roll freedom at initial contact (considerable after single-point coupling) but was not able to incorporate this much-needed feature into the pitch-axis design. This deficiency can be (and was) made less troublesome by adjusting fighter flaps to give best fighter pitch attitude at coupling speeds.

b. Yaw freedom between the bomber head mechanism and the fighter probe fitting to which the "spool" was attached was inadequate. By this is meant that release from single-point attachment was physically and mechanically impossible at yaw angles that were not considered excessive.

c. The "ball-bearing screw" jacks proved particularly troublesome. One can only conclude that they were not capable of doing the job required of them. As an observation, it does not seem that an elaborate piece of equipment requiring such precise adjustment

and having inherently one performance requirement built around such a variable as the friction constant has a place in a design where high reliability is so important. At least the designer should bend over backward in looking for a more appropriate piece of gear.

B. RECOMMENDATIONS

1. Recommendations are made only in four general areas. The specific needs of the Tom-Tom coupling design can be determined from reading the above "Conclusions" and the section of this report on "Design".

2. Initial Coupling. Allowances must be made for mismatch of the aircraft coupling mechanisms at initial contact - differences in vertical and horizontal position and differences in roll, pitch, and yaw attitudes Yaw freedom (exclusive of binding mentioned under "Conclusions" above) was inherent in the fighter "spool." Roll and pitch freedoms were provided but, initially, were free beyond acceptable limits for practical coupling. Roll freedoms up to ± 5 degrees are desirable for initial coupling. Pitch freedoms up to ± 5 degrees are desirable for initial coupling. These limits, however, should be based on the airplanes involved and their particular problems.

3. Release System. Release should be positive, reliable and clean. Emergency release should have only one criteria- -immediate and complete release. Squibs have proved most effective in Convair's experience on both the Tom-Tom and Ficon projects.

4. Reliability. No piece of equipment has appreciable value unless it is reliable. Generally speaking, the simpler system is the more reliable. However, a simple design must be based on good solid thought and engineering study.

5. Use of Mock-ups. Exact wooden mock-ups of the coupling head and fighter probe on the part of Thieblot in the early design stages would have paid big dividends. A scale mock-up of the coupling mechanisms in the region of contact is recommended.

## III. A CRITIQUE OF TOM-TOM AS AN OVER-ALL EFFORT

### A. CONCLUSIONS

1. The Tom-Tom program started out as a tactical requirement and ended as a research and development program - and should be judged in that light. Hindsight is traditionally better than foresight; therefore it can be seen where the total program could have been accomplished better, quicker, and at lesser cost.

2. Management-wise it might be said that the program was not properly scheduled; follow-up by Convair and the Air Force could have been improved; and the program suffered because the authority to make design and other decisions was delegated to a too-great extent.

3. Thieblot Aircraft accepted a task almost beyond their technical capabilities. (It should be noted here that the task was a very difficult one.)

4. Convair and the Air Force should have given very careful study to Thieblot's technical capabilities before placing design responsibility with them.

5. The Thieblot task should have been carefully scheduled (and Convair should have agreed regarding the practicability of the schedule). Likewise, the Convair effort should have been carefully scheduled. A schedule is a very sobering document. A good one requires that the entire program be thought through - from beginning to end. It should be planned with the objectives and problems to be solved kept in mind. Progress of the program should be checked against it repeatedly.

6. It is very difficult to properly coordinate a complex project where the design is done 1500 miles from actual fabrication of parts, assembly, installation, and flight testing.

7. Convair was not supplied enough working drawings during the Thieblot design study stages.

8. The B-36 is an exceedingly expensive flight test vehicle to maintain. Target flight dates are also difficult to achieve where the maintenance of the aircraft is kept to a frugal minimum (as in the case of this program).

9. The program was overloaded with instrumentation. This seems to be almost traditional in a research and development program. Instrumentation difficulties caused many missed flight dates.

10. The flight test program was hampered by the Air Force requirement that one or more observation aircraft accompany each flight. It is more difficult to get four or three aircraft into the air than two.

11. Despite its many faults and considerable expense it is believed that the "state-of-the-art" of wing-tip towing has been advanced considerably.

B. RECOMMENDATIONS

1. The Air Force and the prime contractor should sit down and itemize the specific items desired to be accomplished on the program, e.g., reports, flight test program, ground checkout, component testing, installation, assembly, fabrication of details, design, design criteria, wind tunnel testing, analytical studies, etc. A reasonable tentative schedule and cost estimate should be formulated by the two jointly. This itemization and scheduling will be more meaningful if it starts with the end results desired and is worked backwards.

2. Task required of the subcontractor should be carefully defined for the benefit of all.

3. Subcontractors should be chosen with care. A careful evaluation of their personnel and facilities should be made prior to placement of any subcontract.

4. The prime contractor should plan to spend approximately 10 percent of the subcontractor's bid time in close follow-up and consultation with his subcontractor. (If the subcontractor gets into difficulties the prime contractor is automatically in difficulty - the fortunes of the two cannot be separated.)

5. Every effort should be made to locate the design, fabrication, and flight testing at one facility.

6. As much experimentation as possible should be done in the wind tunnel and with less expensive (maintenance-wise) vehicles than the B-36 and RF-84 before embarking on an operational design.

7. Instrumentation should be at a minimum.

## REFERENCES


1. MR-A-329, "Preliminary Stability Investigation of the Effect of Skewing the Hinge Axis on a Wing-Tip-Towed Airplane," 22 October 1953, Convair-Fort Worth.

2. FZS-36-306, "Structural Design Criteria RB-36D/RF-84F Composite Wing Tip Coupling," 29 December 1953, Convair-Fort Worth.

3. F.T.I. No. 14.1-22, "Proximity Flight Test Program - Project TOM-TOM," 28 October 1954, Convair-Fort Worth.

4. SGD-17, "Project TOM-TOM Semi-Span Dynamic Model Wind Tunnel Tests," 2 November 1954, Convair-Fort Worth.

5. SGD-18, "Project TOM-TOM Full Span Dynamic Model Wind Tunnel Tests," April 1955, Convair-Fort Worth.

6. FZA-090, "Project TOM-TOM Equations of Motion for Stability Studies on Skewed-Axis on Single Point Systems," 13 May 1955, Convair-Fort Worth.

7. FZS-119, "Wing-TOM-TOM Proof Tests and Spring Rates RB-36D No. 143," 25 November 1955, Convair-Fort Worth.

8. FSG-413, "Wing-Coupling Mechanism - Emergency Release - Operational Test," 31 January 1956, Convair-Fort Worth.

9. FTDM-1518, "Wing-TOM-TOM Latch Release - Jury Rigged System - Operational Load Test," 28 February 1956, Convair-Fort Worth.

10. FZA-36-329-1, "Performance Estimates for RB-36F/RF-84F TOM-TOM Parasite System," 26 March 1956, Convair-Fort Worth.

11. FZS-119 Addendum 1, "Wing-TOM-TOM Coupling Mechanism Proof Tests of RF-84F," 5 May 1957, Convair-Fort Worth.

12. FZS-119 Addendum 2, "Wing-TOM-TOM Determination of Spring Rates RF-84F," 5 June 1957, Convair-Fort Worth.

13. FZA-272, "Project TOM-TOM Results of Stability Studies on Skewed-Axis and Single Point Systems," 1 September 1957, Convair-Fort Worth.

14. FZA-36-342, "TOM-TOM Flight Test Program Summary," 20 September 1957, Convair-Fort Worth.

15. FZA-36-335, "TOM-TOM Instrumentation Report," 20 September 1957, Convair-Fort Worth.




Preceding Page Blank

16. FZA-273, "Static Analysis of the Skewed-Axis," November 1957, Convair-Fort Worth.

17. FZS-36-490, "Dynamic Loads Study and Measured Flight Loads TOM-TOM RB-36F/RF-84F," 21 December 1957, Convair-Fort Worth.

18. FZM-36-1192, "Project TOM-TOM: Report of Test Flight 18 Plus Convair's Recommendations Regarding Continuation of Project," 15 October 1956, Convair-Fort Worth.

19. FZM-36-526, "Structural Loading Analysis, Project MX-1713," 24 September 1954, Thieblot Aircraft Co.

20. FZM-36-527, "Detailed Stress Analysis Project MX-1713," 30 April 1955, Thieblot Aircraft Co.

21. FZA-36-328, "Standard Aircraft Characteristics for RB-36DIII/RF-84F TOM-TOM Parasite System," 1 November 1955, Thieblot Aircraft Co.

22. FZA-36-329, "Performance Estimates for RB-36DIII/RF-84F TOM-TOM Parasite System," 1 November 1955, Thieblot Aircraft Co.

23. FZA-36-339, "RB-36DIII TOM-TOM Parasite System Appendix I Data," 1 November 1955, Thieblot Aircraft Co.

24. FZM-36-521, "Spanwise Lift Distribution on Project MX-1713," 1 November 1955, Thieblot Aircraft Co.

25. FZM-36-665, "Dynamic Wind Tunnel Model, Project MX-1713," 6 April 1956, Thieblot Aircraft Co.

26. FZM-36-522, "Summary of RF-84F Derivatives for RB-36D/RF-84F TOM-TOM Parasite System," 7 June 1956, Thieblot Aircraft Co.

27. FZM-36-528, "Wind Tunnel Tests of Static Models of the TOM-TOM Parasite System," 8 February 1957, Thieblot Aircraft Co.

28. TR-39-057, "Dynamic Analysis of RB-36D/RF-84F TOM-TOM Parasite System, May 1957," Thieblot Aircraft Co.

29. TR-39-055, "Summary Report Project MX-1713," May 1957, Thieblot Aircraft Co.

30. 6176, "Flight Investigation of a Wing Tip Coupling Method Using a C-47A and Q-14B Airplane," October 1951, Air Force Technical Report.

31. Aero Memorandum No. 26, "Dynamic Wind Tunnel Tests for the USAF Aircraft Range Extension Program of a 1/25 Scale Model Semi-Span RB-36 Wing with RF-84F Fighter Attached," February 1955, Navy Department, David W. Taylor Model Basin Aerodynamics Laboratory.

32. NACA-RM-SL56A256, "Flutter Tests of a 1/25 Scale Model of the B-36J/RF-84F Tip-Coupled Airplane Configuration in the Langley 19 Foot Pressure Tunnel," 15 March 1956, NACA.

33. FZS-36-304, "Structural Design Criteria for Production Ficon Installation," 7 October 1956, Convair-Fort Worth.

34 E-SIR-37, "Accident to F-84D-2RE Serial No. 48-641 and B-29 Serial No 46-2093 at Peconic Bay, Long Island," 12 May 1953, Republic Aviation Corporation.

35 EFR-108, "Flight Tests of Project MX-1016," October 1953, Republic Aviation Corporation.

36 EFR-88, "Flight Tests of Project MX-1016," 16 January 1951, Republic Aviation Corporation.

37 ERS-151, "Flight Test Measurements of Forces, Moments, and Accelerations, Project MX-1016," 6 March 195 , Republic Aviation Corporation.

38 EFR-85, "Flight Test Instrumentation, Project MX-1016," August 1950, Republic Aviation Corporation.

39 EDR-F905-102, "Theoretical Investigation of the Dynamic Stability of Bomber-Fighter Coupled Flight," 10 July 1950, Republic Aviation Corporation.

40 EDR-F905-801, "Preliminary Design of Mechanism for Wing Tip Attachment of F-84 Aircraft to B-29 or B-50 Bombers for Long Range Towing," 15 July 1949, Republic Aviation Corporation.

41 Final Report, "Theoretical Study of the Stability of Wing-Tip Coupled Aircraft," 28 December 1954, J. B. Rea Company.

## NOTIFICATION OF MISSING PAGES

**INSTRUCTIONS:** THIS FORM IS INSERTED INTO ASTIA CATALOGED DOCUMENTS TO DENOTE MISSING PAGES.

| DOCUMENT | CLASSIFICATION (CHECK ONE) | | |
|---|---|---|---|
| | UNCLASSIFIED | CONFIDENTIAL | SECRET |
| AD | | | ✓ |
| ATI | | | |

THE PAGES, FIGURES, CHARTS, PHOTOGRAPHS, ETC., MISSING FROM THIS DOCUMENT ARE:

BLANK.

**DO NOT REMOVE**

DEPARTMENT OF THE AIR FORCE
HEADQUARTERS 88TH AIR BASE WING (AFMC)
WRIGHT-PATTERSON AIR FORCE BASE OHIO

88 CS/SCOKIF (FOIA)
3810 Communications Blvd
Wright-Patterson AFB OH 45433-7802

2 SEP 2009

Defense Technical Information Center
Attn: Ms. Kelly Akers (DTIC-R)
8725 John J. Kingman Rd, Suite 0944
Ft Belvoir VA 22060-6218

Dear Ms. Akers,

This concerns the following Technical Reports:
**AD030368**, Project FICON, 28 February 1966 (*FOIA#2009-03050FJM*)
**AD00052997**, Description of Parasite System utilizing Covair, 16 July 1958 (*FOIA# 2009-03049FJM*
**AD0162502**, Project TOM TOM, 16 July 1958 (*FOIA#2009-03046FJM*)

All of these reports have previous Distribution Limitation: 02- DoD and their contractors.

Subsequent to WPAFB FOIA Control Numbers 2009-03050-FJM, 2009-03049FJM and 2009-03046FJM these records have been cleared for public release by Air Force Research Lab Materials and Manufacturing Senior Scientist and Deputy Chief on 25 August 2009. Therefore, record is now fully releasable to the public. I ask that it be available online for public view so that the requestor may obtain the records as needed.

Please let my point of contact know when the record is available to the public. Email: jodi.mccoy@wpafb.af.mil ,if you have any questions, my point of contact is Jodi McCoy at (937) 522-3095.

Sincerely,

KAREN M. COOK
Freedom of Information Act Manager
Base Information Management Section
Knowledge Operations

8 Attachments
1. FOIA Request # 2009-03046FJM
2. Copy of AFMC Form 559
3. FOIA Request # 2009-03050FJM
4. Copy of AFMC Form 559
5. FOIA Request # 2009-03050FJM
6. Copy of AFMC Form 559
7. FOIA Request # 2009-03049FJM
8. Copy of AFMC Form 559