Rapid, Low-Energy Interferer Detection Using Compressive-Sampling RF-to-Information Converters

Peter R. Kinget, Tanbir Haque, Matthew Bajor, and John Wright
Columbia University, New York, NY, 10027, USA
Email: kinget@ee.columbia.edu

***Abstract*—Modern military radios for SIGINT or communication applications often need to operate in an interferer-rich environment. They typically need to quickly find interferers or jammers, both spectrally and spatially, to take appropriate countermeasures. We show how compressive sampling (CS) can enable unique RF capabilities and performance. The Direct-RF-to-Information Converter (DRF2IC) rapidly detects interferers or signals of interest (SOI) in the spectral domain and the Direct-Space-to-Information Converter (DSIC) rapidly detects their direction of arrival in the spatial domain. Thanks to CS, the SOIs are found quickly while only requiring low energy. We demonstrate RF ICs of these converters implemented as overlays on high performance receivers and beamformers. Their speed, low energy, and unified architectures makes them excellent solutions in SWaP-constrained platforms like man-portable, satellite and unmanned aerial system (UAS) applications.**

***Index Terms*—Compressed sampling, interferer detection, cognitive radio, spectral scanner, Direction of Arrival (DoA), phased arrays**

I. Introduction

Recent advances in COTS software-defined radios (SDRs) have allowed wide access to advanced radio-frequency (RF) communications technologies that are severely crowding the electromagnetic (EM) environment [1] [2]. This congestion can put a handicap on military communications equipment. To navigate this cluttered environment, there is a continued need to develop the ability for receivers to find interferers or signals of interest (SOI) and to get full EM environmental awareness (EMEA) in three domains: spectrally, spatially, and temporally. This needs to be done both with high speed and high energy efficiency. Unfortunately, many modern radio architectures do not scale well in terms of scan speed or energy consumption.

Figure 1 illustrates a typical EM environment with multiple SOI's across the spatial and frequency domains. For current cognitive radios, EMEA is provided through on-board software, which is typically constrained by the limitations of the RF front end. Hence there is a need for additional hardware EMEA sensors that can independently monitor the conditions of the radio node's present EM environment across a very wide spectral span and many spatial directions (i.e. angles).

Figure 2 illustrates the concept of the communications "resource cube" where EMEA sensor information for the EM environment is present in the resource cube's three domains. The current state-of-the-art (SoA) sensors for constructing a resource cube use traditional frequency or direction of arrival (DoA) scanners. These scanners are slow and consume substantial energy, particularly if rapid tracking of fast moving signals is required.

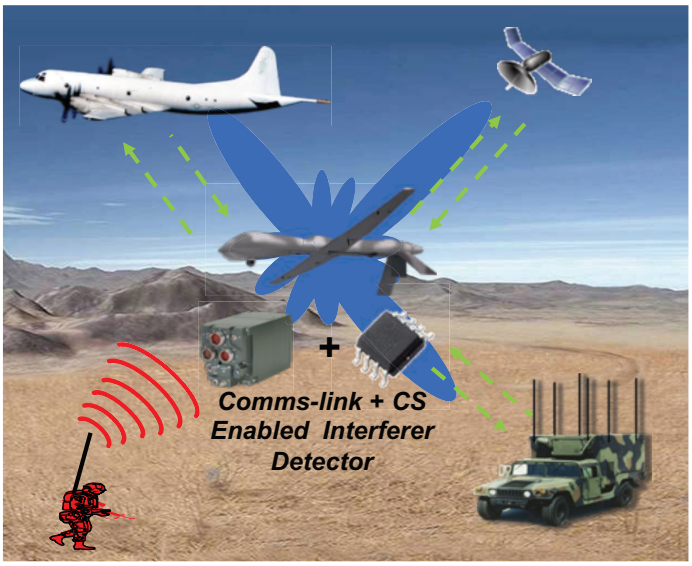

Fig. 1: *An example of how a CS-assisted interferer detector creates local EM environmental awareness and helps a UAS comms-link by avoiding adversarial jamming.*

We propose the use of a relatively new branch of digital signal processing called compressive sampling (CS). For signals with a sparse structure, CS is a unique signal processing solution that enables a substantial reduction in the number of samples or measurements required. Combining CS and custom Radio Frequency Integrated Circuits (RFICs) makes it possible to create chip-scale EMEA sensors that can find signals both spatially and spectrally. This approach offers 10x faster speed and large energy savings as compared to contemporary EM sensing systems.

Recent research has indeed shown that these CS techniques can drive innovations in RF circuit architectures to develop systems that offer novel performance envelopes [3] [4]. For RF spectrum scanners, research has demonstrated the possibility to build very fast spectrum scanners that can detect up to 6 interferers over 1GHz of bandwidth in less than 10μs

DISTRIBUTION STATEMENT A.
Approved for public release: distribution is unlimited.

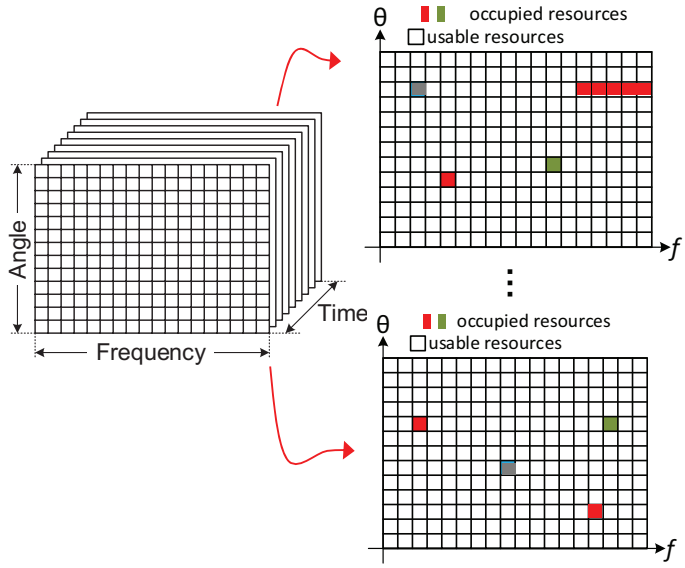

Fig. 2: *A 3-D resource cube showing available "white-space" in the spatial (i.e. angle), frequency and time domains*

requiring up to 6x less energy than classical approaches [5] [6]. In the spatial domain, it has been demonstrated that when using CS based techniques, it is possible to use a third of the measurements needed for traditional spatial scanning techniques when using a field of view of 180° and as little as 11 antennas [7]. CS methods that use the temporal aspects of signals, i.e. pulse-repetition-interval (PRI), and target ranging can be used to identify white-spaces in the time-domain without having to include a high-speed analog-to-digital converter (ADC) [8]. Lastly, it has also been demonstrated that simultaneous multi-domain interferer filtering is possible [9] and compact, low-power architectures can allow the ability to include many (i.e. 4) antenna paths on chip without sacrificing beam-steering performance [10].

The Columbia Integrated Systems Laboratory (CISL) has demonstrated a family of prototype hardware that provides EM environmental awareness using CS. Fully operational CS-based chips have been designed, tested, and characterized in test platforms. Two of the most recent chips, the Direct RF-to-Information Converter (DRF2IC) [11] and the Direct Space-to-Information Converter (DSIC) [12] are reviewed in this paper. These chips further offer unified architectures: the DRF2IC architecture elegantly merges traditional high-performance direct-conversion reception and high-performance CS-based spectral scanning. The DSIC unifies a fast CS-based DoA scanner with a conventional beamforming receiver. Both are able to switch between scanning and receiving mode in μs, making them well suited for enabling communications in interferer-rich environments.

A. A Brief Intro to Compressed Sampling

For signals that are sparse in some domain, (e.g., the frequency spectrum or spatial spectrum) it is possible to detect SOIs with fewer random measurements than are required by Nyquist-rate based systems [13]. Sparsity is defined as $N \gg K$ where N is the number of possible spectral or spatial locations and K is the number of present SOIs.

For a vector $\mathbf{x} \in \mathbb{C}^N$, where $\mathbf{x} = \mathbf{\Psi X}$, $\mathbf{\Psi}$ is the $N \times N$ dictionary matrix and $\mathbf{X}$ is an $N \times 1$ vector representing the frequency or spatial spectrums, CS theory shows that $\mathbf{X}$ can be recovered using m measurements where

$$m = KC_o \log\left(\frac{N}{K}\right) \tag{1}$$

where C_0 is a constant related to the CS algorithm used for recovery. This is in contrast to a Nyquist-rate based system requiring N measurements for successful signal recovery. The recovery method used in both the DRF2IC and the DSIC is *Orthogonal Matching Pursuit* or OMP. It is used for its simplicity and ability to quickly recover SOIs however, other CS recovery methods can be used.

II. Using CS to Find Signals Spectrally

Energy-efficient, wideband interferer detection is a key component of future EMEA sensors. EM environmental information containing the spectral locations of adversarial interference will allow the transceiver to find new spectral locations for establishing a communications link. Current SoA spectrum scanners rely on traditional spectral analysis that includes an intrinsic trade-off between span, resolution bandwidth and scan time. In a single-branch sweeping scanner, each bin is scanned sequentially by sweeping the LO driving the I/Q downconverter. Covering a $>$10GHz span with a 20MHz RBW requires a long scan time ($>$2200μs), which results in large energy consumption and an inability to track agile targets (Fig 3a). Parallelism can overcome the scan-time limitations but the energy requirements remain constant for a single-branch or a multi-branch realization. Additionally, circuit and system complexity does not scale well from a SWaP and system designer's standpoint (Fig. 3b). E.g., for a 1GHz span and 20MHz RBW, a 50-branch realization would have a 4.4μs sensing time but an impractical hardware complexity. A Nyquist-rate FFT solution on the other hand would require a prohibitively high sampling rate after down-conversion. (Fig. 3c).

For signals that are strong interferers and above some threshold, the information bandwidth is much smaller than the instantaneous bandwidth and CS can therefore be used to break the traditional performance trade-offs described above. Figure 4, shows the basic operation of a CS based spectrum sensor. Pseudorandom-noise (PN) modulation of a receiver's LO signal folds the wideband input RF signal onto narrowband baseband channels followed by CS DSP techniques to identify the active SOIs. It is important to note that interferer detection using CS only requires identifying the locations of the interferer spatially or spectrally using support vectors. Unlike other methods, **total signal reconstruction is not needed.**

CISL has simulated, designed, built and tested the DRF2IC RF ASIC shown in Fig. 5. The DRF2IC is a fully-functional

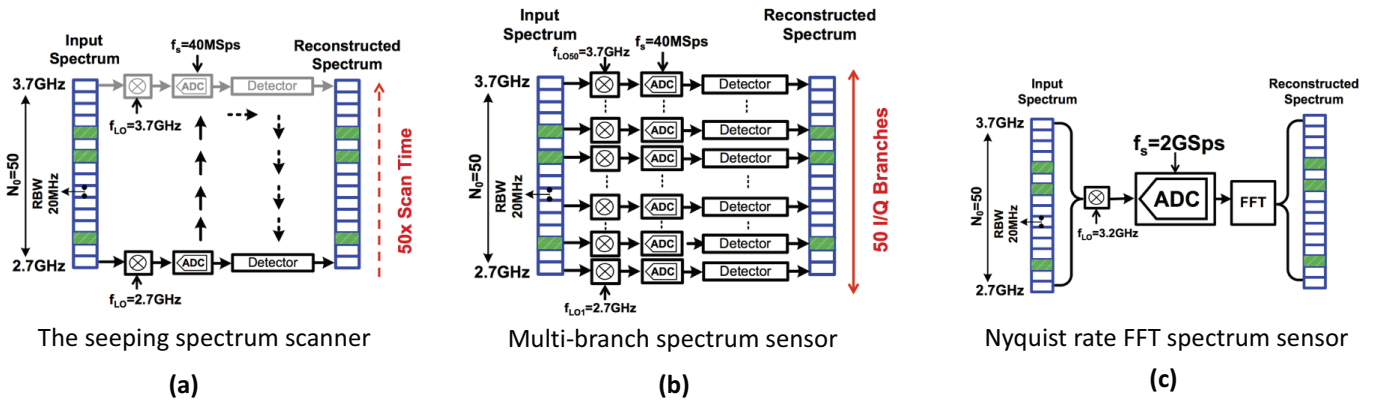

Fig. 3: *A comparison of conventional spectrum analysis approaches*

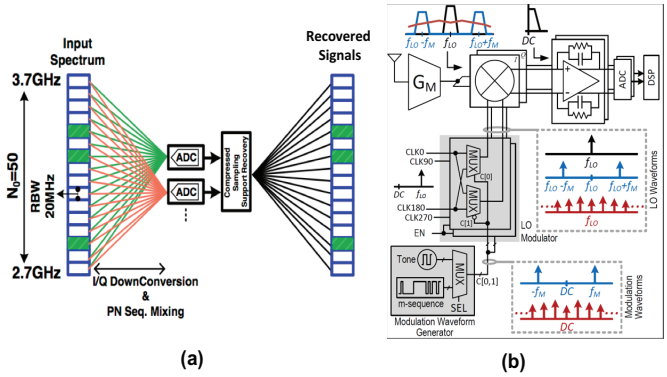

Fig. 4: *Theory of operation of the DRF2IC RF ASIC (a) and a system-level diagram depicting key points of operation (b).*

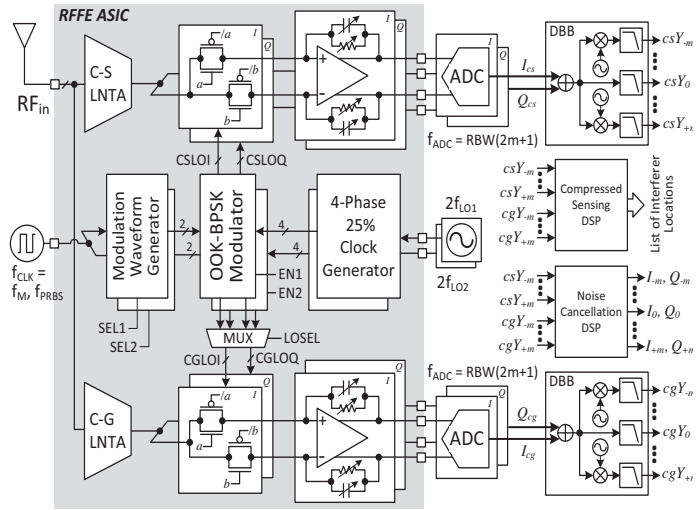

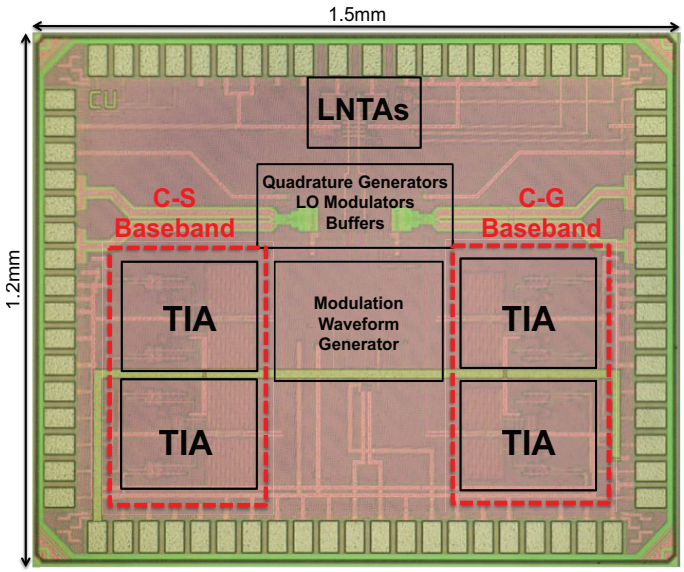

Fig. 5: *The DRF2IC circuit architecture (a) and die photo (b)*

CS-based spectrum scanner system fabricated in 65nm CMOS and consumes only 58.5mW. In wideband detection mode, it can detect up to three 20MHz, or six 10MHz wide signals with a probability of detection $P_d > 90\%$ and a probability of false alarm $P_{fa} < 10\%$. The minimum and maximum detectable SOI levels are -71dBm and -4.8dBm, achieving a 66dB operational dynamic range. The DRF2IC includes multiple modes: reception, narrowband sensing, and wideband detection. Switching between modes takes only 50ns. While the DRF2IC operates from from 635MHz to 2.84GHz, in principle the CS spectrum-scanning architecture can be targeted to any frequency range.

III. Using CS to Find Signals Spatially

Locating an emitter spatially by finding its direction of arrival (DoA) requires the receiver to have multiple antennas. While many DoA methods exist, current multi-antenna receiver systems often rely on conventional beam-forming (CBF) architectures for both scanning and receiving. Additionally, while the CBF can perform hierarchical scans by broadening its main beam, this decreases sensitivity while increasing its mis-detection rate. In the end, exhaustive scans

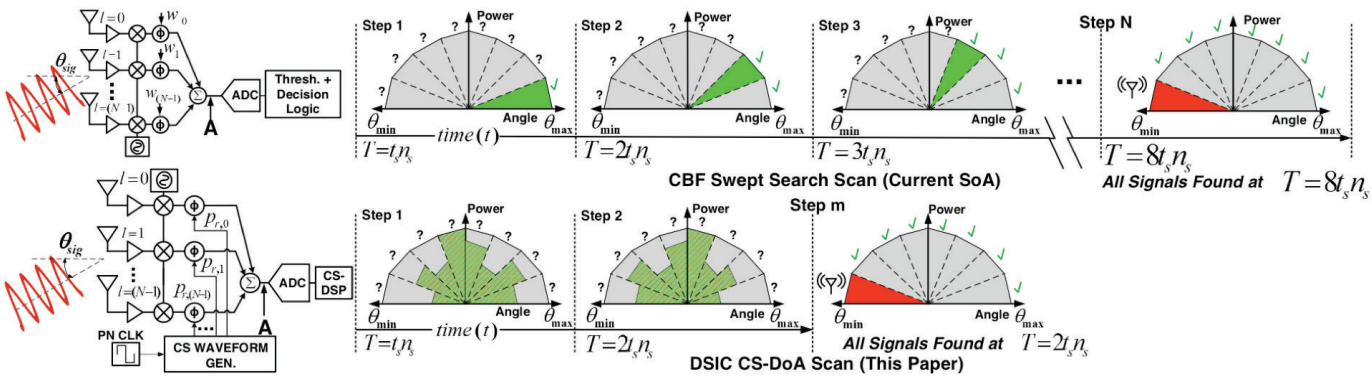

Fig. 6: *An implementation example of the DSIC in operation 9 (b) vs. a traditional CBF (a). The SOI is found by the CBF performing a sequential scan of all N angles; The DSIC only needs m composite measurements to find the signal using CS DSP with $m \ll N$.*

where each sector is scanned at the highest resolution and sensitivity are typically more favorable.

In a CBF, emitters are detected by delaying the signal received at each antenna with delays or phase-shifters and then combining them either constructively or de-constructively. Using N antennas typically allows to define N distinct scan angles. Unfortunately, for DoA, sequentially scanning N angles to find an emitter is slow and the energy usage is high if many antennas are required for finer scan-angle resolution.

Figure 6 contrasts the traditional swept CBF method with the proposed CS-DoA approach. Multi-antenna swept CBF scanners suffer from an inherent tradeoff between scan-angle resolution and scan time. To find a SOI with a CBF, the angle-space consisting of N angles is sequentially "scanned" by changing antenna weight vector W_l, where each element w corresponds to a DoA θ through the relative phase between antenna elements β. The outputs from all antenna branches are summed at point A and when the aggregate power is above a threshold, a signal is said to be detected. The time to sweep through each scan angle is $n_s t_s$ where n_s is the number of samples and t_s is the sampling period. The energy usage for a complete spatial scan with the swept CBF method scales quadratically with the number of scan angles and antennas for a constant CBF sensitivity per scan angle.

In contrast, the DSIC in CS-DoA mode can rapidly find the DoA of K interferers or SOIs by forming m measurements, provided that the signal is sparse $(K \ll N)$ in the angle space. It does this by creating random mixtures of antenna signals by randomly phase-shifting the the received signal at each antenna via a PN sequence $P_{i,l}(t)$ where i is the measurement number and l is the antenna element index, creating *composite antenna patterns*. The number of measurements m needed to find a SOI is given by (1) and $m < N$. Since less composite antenna patterns are needed to find a SOI using the DSIC than sector scans using the CBF, the DSIC is more energy efficient and faster. The DSIC's energy usage scales by mN rather than N^2 for the CBF and the DSIC is faster by a factor of $\frac{m}{N}$.

CISL has simulated, designed, built and tested the DSIC RF ASIC shown in Fig. 7. It is a fully-functional, CS based DoA scanner system than can operate from 1GHz to 3GHz, is capable of utilizing 8 antenna elements, and was fabricated in 65nm CMOS. It consumes 158mW or 19.8mW per antenna element and can switch between its two modes of operation, CBF reveive mode and CS-DOA mode in 1μs.

The DSIC can spatially find a single SOI at a -84dBm incident signal power with a $P_d > 90\%$ and $P_{fa} < 10\%$ using only $m = 2$ measurements (composite antenna patterns). It can find 2 signals with -87dBm and $m = 4$ measurements also with a $P_d > 90\%$ and $P_{fa} < 10\%$. In [12], the PN sequences were Radamacher based where each chip corresponds to either a $0°$ or $180°$ phase shift. This in turn allows the DSIC to scan the entire field of view using only 1-bit of resolution in its vector modulators.

In principle, the CS DoA scanning methodology can be extended to any frequency range assuming the antenna array is appropriately constructed. Likewise, the DSIC RF ASIC can be grouped with other DSIC RFICs to scale up the number of antenna elements. An order of magnitude in energy savings is shown in [12] when scaled to array sizes suitable for RADAR or massive MIMO applications.

IV. Ensuring Sparsity for Unknown EM Environments

For conditions where the sparsity of the frequency or spatial spectrums are unknown, analysis of the OMP residue and adaptive thresholding can be used to ensure sparsity. For example, if the DSIC is configured to find one signal with 90% detection probability but multiple signals are present, the residue of the OMP algorigthm will be large. This means that the OMP threshold should be increased or more measurements m should be used. A check of the environments sparsity only needs to take place at the beginning of a scan and previous measurements can be reused [14].

V. Conclusions

CS-enabled spectrum and DoA scanners are able to use a much lower number of measurements than traditional Nyquist-rate scanners, allowing them to obtain high energy

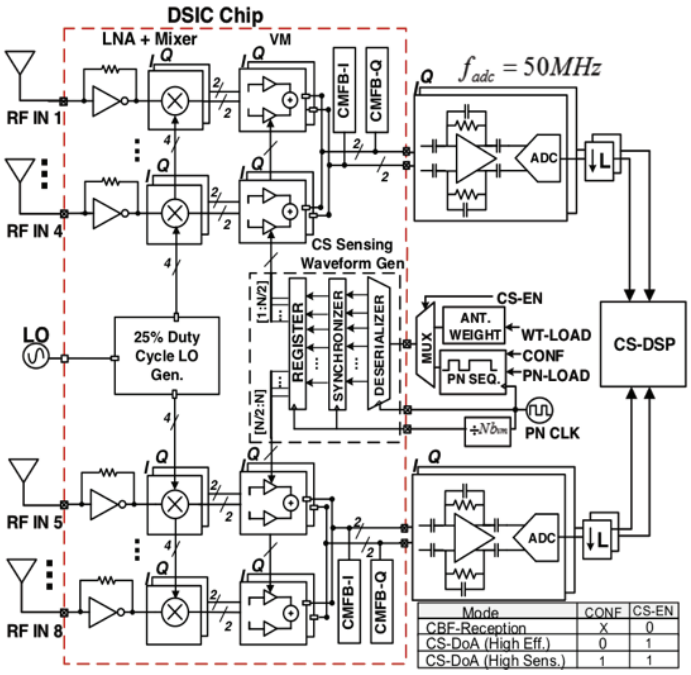

(a)

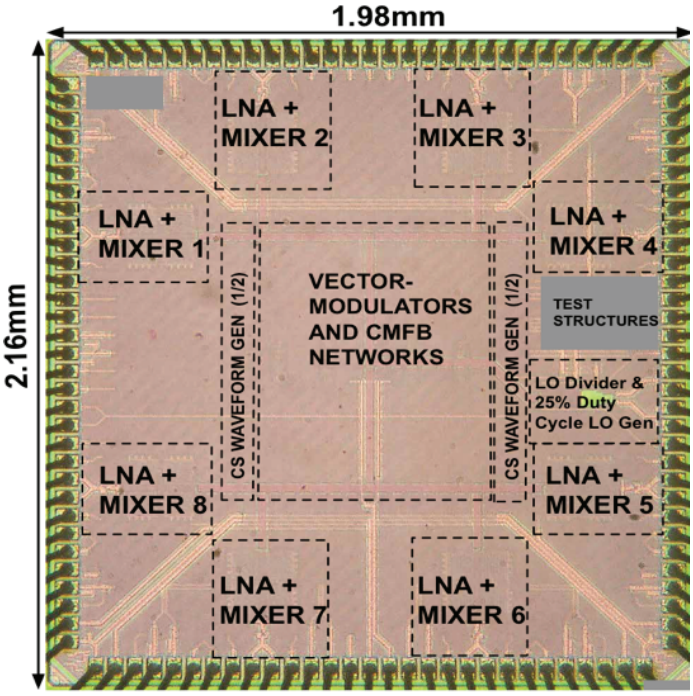

(b)

Fig. 7: *The circuit architecture of the DSIC (a), and its die photo (b).*

efficiency by being able to performs scans more quickly than the current SoA. In this paper, we have demonstrated two new receiver architectures with designs driven by their use of CS, the DRF2IC and the DSIC. Both architectures are able to detect SOIs much more quickly than the current SoA. They can provide full EM awareness for future man-portable, UAS and satellite applications where size and energy budgets are constrained. The DRF2IC and DSIC further offer significant advantages in both efficiency and scalability.

References

[1] P. Gupta and P. R. Kumar, "The capacity of wireless networks," *IEEE Transactions on Information Theory*, vol. 46, no. 2, pp. 388–404, March 2000.

[2] J. Xie, Y. Wan, J. H. Kim, S. Fu, and K. Namuduri, "Analysis of mobility models for airborne networks," in *MILCOM 2013 - 2013 IEEE Military Communications Conference*, Nov 2013, pp. 858–863.

[3] T. Haque, R. T. Yazicigil, K. J. L. Pan, J. Wright, and P. R. Kinget, "Theory and design of a quadrature analog-to-information converter for energy-efficient wideband spectrum sensing," *IEEE Transactions on Circuits and Systems I: Regular Papers*, vol. 62, no. 2, pp. 527–535, Feb 2015.

[4] D. Adams, Y. C. Eldar, and B. Murmann, "A mixer front end for a four-channel modulated wideband converter with 62-db blocker rejection," *IEEE Journal of Solid-State Circuits*, vol. 52, no. 5, pp. 1286–1294, May 2017.

[5] R. T. Yazicigil, T. Haque, M. R. Whalen, J. Yuan, J. Wright, and P. R. Kinget, "Wideband rapid interferer detector exploiting compressed sampling with a quadrature analog-to-information converter," *IEEE Journal of Solid-State Circuits*, vol. 50, no. 12, pp. 3047–3064, Dec 2015.

[6] R. T. Yazicigil, T. Haque, M. Kumar, J. Yuan, J. Wright, and P. R. Kinget, "A compressed-sampling time-segmented quadrature analog-to-information converter for wideband rapid detection of up to 6 interferers with adaptive thresholding," in *2016 IEEE Radio Frequency Integrated Circuits Symposium (RFIC)*, May 2016, pp. 282–285.

[7] V. Cevher, A. C. Gurbuz, J. H. McClellan, and R. Chellappa, "Compressive wireless arrays for bearing estimation," in *ICASSP*, 2008.

[8] M. Rossi, A. M. Haimovich, and Y. C. Eldar, "Spatial compressive sensing for MIMO radar," *IEEE Transactions on Signal Processing*, vol. 62, no. 2, pp. 419–430, Jan 2014.

[9] A. Ghaffari, E. Klumperink, F. Van Vliet, and B. Nauta, "Simultaneous spatial and frequency domain filtering at the antenna inputs achieving up to +10dBm out-of-band/beam P1dB," in *ISSCC*, 2013, pp. 84–85.

[10] M. Soer, E. A. M. Klumperink, D.-J. van den Broek, B. Nauta, and F. E. van Vliet, "Beamformer with constant-gm vector modulators and its spatial intermodulation distortion," *IEEE Journal of Solid-State Ciruits*, pp. 735–746, 2017.

[11] T. Haque, M. Bajor, Y. Zhang, J. Zhu, Z. A. Jacobs, R. B. Kettlewell, J. Wright, and P. R. Kinget, "A reconfigurable architecture using a flexible lo modulator to unify high-sensitivity signal reception and compressed-sampling wideband signal detection," *IEEE Journal of Solid-State Circuits*, vol. 53, no. 6, pp. 1577–1591, June 2018.

[12] M. Bajor, T. Haque, G. Han, C. Zhang, J. Wright, and P. R. Kinget, "An 8-element, 1-3GHz direct space-to-information converter for rapid, compressive-sampling direction-of-arrival finding utilizing pseudo-random antenna-weight modulation," in *2018 IEEE Radio Frequency Integrated Circuits Symposium (RFIC)*, June 2018, pp. 116–119.

[13] E. Candes, "Compressive sampling." *Proc. Int. Congress of Math*, pp. 67–94, 2006.

[14] R. T. Yazicigil, T. Haque, M. Kumar, J. Yuan, J. Wright, and P. R. Kinget, "How to make analog-to-information converters work in dynamic spectrum environments with changing sparsity conditions," *IEEE Transactions on Circuits and Systems I: Regular Papers*, vol. 65, no. 6, pp. 1775–1784, June 2018.