NORTH ATLANTIC TREATY ORGANIZATION

SCIENCE AND TECHNOLOGY ORGANIZATION

AC/323(SET-206)TP/801

www.sto.nato.int

STO TECHNICAL REPORT

TR-SET-206-Part-II

Overview of Dismounted Soldier Systems

(Vue d'ensemble des systèmes pour fantassin)

This Report documents the findings of STO SET-206 as it relates to the trends of trade-offs of manwearable/manportable power systems on the dismounted soldier.

Published November 2018

Distribution and Availability on Back Cover

NORTH ATLANTIC TREATY ORGANIZATION

SCIENCE AND TECHNOLOGY ORGANIZATION

AC/323(SET-206)TP/801

www.sto.nato.int

STO TECHNICAL REPORT

TR-SET-206-Part-II

Overview of Dismounted Soldier Systems

(Vue d'ensemble des systèmes pour fantassin)

This Report documents the findings of STO SET-206 as it relates to the trends of trade-offs of manwearable/manportable power systems on the dismounted soldier.

The NATO Science and Technology Organization

Science & Technology (S&T) in the NATO context is defined as the selective and rigorous generation and application of state-of-the-art, validated knowledge for defence and security purposes. S&T activities embrace scientific research, technology development, transition, application and field-testing, experimentation and a range of related scientific activities that include systems engineering, operational research and analysis, synthesis, integration and validation of knowledge derived through the scientific method.

In NATO, S&T is addressed using different business models, namely a collaborative business model where NATO provides a forum where NATO Nations and partner Nations elect to use their national resources to define, conduct and promote cooperative research and information exchange, and secondly an in-house delivery business model where S&T activities are conducted in a NATO dedicated executive body, having its own personnel, capabilities and infrastructure.

The mission of the NATO Science & Technology Organization (STO) is to help position the Nations' and NATO's S&T investments as a strategic enabler of the knowledge and technology advantage for the defence and security posture of NATO Nations and partner Nations, by conducting and promoting S&T activities that augment and leverage the capabilities and programmes of the Alliance, of the NATO Nations and the partner Nations, in support of NATO's objectives, and contributing to NATO's ability to enable and influence security and defence related capability development and threat mitigation in NATO Nations and partner Nations, in accordance with NATO policies.

The total spectrum of this collaborative effort is addressed by six Technical Panels who manage a wide range of scientific research activities, a Group specialising in modelling and simulation, plus a Committee dedicated to supporting the information management needs of the organization.

- AVT Applied Vehicle Technology Panel
- HFM Human Factors and Medicine Panel
- IST Information Systems Technology Panel
- NMSG NATO Modelling and Simulation Group
- SAS System Analysis and Studies Panel
- SCI Systems Concepts and Integration Panel
- SET Sensors and Electronics Technology Panel

These Panels and Group are the power-house of the collaborative model and are made up of national representatives as well as recognised world-class scientists, engineers and information specialists. In addition to providing critical technical oversight, they also provide a communication link to military users and other NATO bodies.

The scientific and technological work is carried out by Technical Teams, created under one or more of these eight bodies, for specific research activities which have a defined duration. These research activities can take a variety of forms, including Task Groups, Workshops, Symposia, Specialists' Meetings, Lecture Series and Technical Courses.

The content of this publication has been reproduced directly from material supplied by STO or the authors.

Published November 2018

Copyright © STO/NATO 2018
All Rights Reserved

ISBN 978-92-837-2129-1

Single copies of this publication or of a part of it may be made for individual use only by those organisations or individuals in NATO Nations defined by the limitation notice printed on the front cover. The approval of the STO Information Management Systems Branch is required for more than one copy to be made or an extract included in another publication. Requests to do so should be sent to the address on the back cover.

Table of Contents

	Page
List of Figures	**viii**
List of Tables	**x**
List of Acronyms	**xi**
SET-206 Membership List	**xiii**
Executive Summary and Synthèse	**ES-1**
Chapter 1 – Introduction	**1-1**
1.1 General Overview	1-1
1.2 List of Soldier Systems	1-1
1.3 General Format	1-2
1.3.1 General Information	1-3
1.3.2 Power and Data Management	1-3
1.3.3 Power Draw − Components that Require Energy	1-4
1.3.4 Experience, Recommendations and Further Development	1-4
1.3.5 Image Soldier System	1-4
Chapter 2 − Soldier System: Nations	**2-1**
2.1 Australia − Soldier Combat Ensemble	2-1
2.1.1 Land 17 − Artillery Replacement	2-1
2.1.1.1 General Information	2-1
2.1.1.2 Power and Data Management	2-1
2.1.1.3 Components that Require Energy	2-2
2.1.1.4 Experience, Recommendations and Further Development	2-2
2.1.1.5 Image Soldier System	2-2
2.1.2 Land 75 − Battle Management System	2-3
2.1.2.1 General Information	2-3
2.1.2.2 Power and Data Management	2-3
2.1.2.3 Components that Require Energy	2-4
2.1.2.4 Experience, Recommendations and Further Development	2-4
2.1.2.5 Image Soldier System	2-5
2.1.3 Land 125	2-6
2.1.3.1 General Information	2-6
2.1.3.2 Power and Data Management	2-6
2.2 Canada − Integrated Soldier System	2-6
2.2.1 General Information	2-6
2.2.2 Power and Data Management	2-7
2.2.3 Components that Require Energy	2-8
2.2.4 Experience, Recommendations and Further Development	2-8
2.2.5 Image Soldier System	2-8

2.3 Finland − Warrior 2020 2-10
2.3.1 General Information 2-10
2.3.2 Power and Data Management 2-10
2.3.3 Components that Require Energy 2-11
2.3.4 Experience, Recommendations and Further Development 2-11
2.3.5 Image Soldier System 2-11
2.3.5.1 Future Soldier System 2-12
2.4 France – FÉLIN 2-13
2.4.1 General Information (Publicly Available Sources) 2-13
2.4.2 Power and Data Management 2-13
2.4.3 Components that Require Energy 2-14
2.4.4 Image Soldier System 2-15
2.5 Germany − Infanterist der Zukunft Erweitere System 2-16
2.5.1 General Information 2-16
2.5.2 Power and Data Management 2-16
2.5.3 Components that Require Energy 2-17
2.5.4 Experience, Recommendations and Further Development 2-17
2.5.5 Image Soldier System 2-18
2.6 Italy − Soldato Futuro 2-20
2.6.1 General Information 2-20
2.6.2 Power and Data Management 2-20
2.6.3 Components that Require Energy 2-21
2.6.4 Experience, Recommendations and Further Development 2-21
2.6.5 Image Soldier System 2-21
2.7 Netherlands − Verbeterd Operationeel Soldaat Systeem 2-22
2.7.1 General Information 2-22
2.7.2 Power and Data Management 2-22
2.7.3 Components that Require Energy 2-23
2.8 Norway – NORMANS 2-23
2.8.1 General Information 2-23
2.8.2 Power and Data Management 2-24
2.8.3 Components that Require Energy 2-24
2.8.4 Power and Data Management 2-25
2.8.5 Components that Require Energy 2-25
2.8.6 Experience, Recommendations and Further Development 2-25
2.8.7 Image Soldier System 2-26
2.9 Portugal 2-26
2.9.1 General Information 2-26
2.9.2 Power and Data Management 2-26
2.9.3 Components that Require Energy 2-27
2.9.4 Experience, Recommendations and Further Development 2-27
2.9.5 Image Soldier System 2-28
2.10 Spain − COMBatiente FUTuro 2-29
2.10.1 General Information 2-29
2.10.2 Image Soldier System 2-29
2.11 United Kingdom − Generic Soldier Architecture 2-30

2.11.1 General Information 2-30
2.11.1.1 Purpose 2-30
2.11.1.2 Application 2-30
2.11.1.3 Starting Points 2-31
2.11.1.4 System Description 2-31
2.11.1.5 Man Worn Power and Data 2-31
2.11.2 Power and Data Management 2-31
2.11.3 Components that Require Energy 2-32
2.11.4 Experience, Recommendations and Further Development 2-32
2.11.5 Image Soldier System 2-33
2.12 United States – Integrated Soldier Power and Data Development (Nett Warrior) 2-34
2.12.1 General Information 2-34
2.12.2 Power and Data Management 2-35
2.12.3 Components that Require Energy 2-35
2.12.4 Experience, Recommendations and Further Development 2-36
2.12.5 Image Soldier System 2-36
2.13 United States – SPIRIT 2-37
2.13.1 General Information 2-37
2.13.2 Power and Data Management 2-37
2.13.3 Experience, Recommendations and Further Development 2-38
2.13.4 Image Soldier System 2-38
2.14 United States (Air Force) – Tactical Air Control Party Development 2-39
2.14.1 General Information 2-39
2.14.2 Power and Data Management 2-39
2.14.3 Components that Require Energy 2-40
2.14.4 Experience, Recommendations and Further Development 2-40
2.14.5 Image Soldier System 2-41
2.15 United States (Marine Corps) – Joint Infantry Company Prototype 2-42
2.15.1 General Information 2-42
2.15.2 Power and Data Management 2-42
2.15.3 Components that Require Energy 2-43
2.15.4 Experience, Recommendations and Further Development 2-43
2.15.5 Image Soldier System 2-44
2.16 Undisclosed Nation 2-44
2.16.1 General Information 2-44
2.16.2 Power and Data Management 2-45
2.16.3 Components that Require Energy 2-45
2.16.4 Experience, Recommendations and Further Development 2-46

Chapter 3 – Soldier System: Manufacturers 3-1
3.1 BAE – Broadsword 3-1
3.1.1 General Information 3-1
3.1.2 Power and Data Management 3-1
3.1.3 Components that Require Energy 3-2

3.1.4 Experience, Recommendations and Further Development 3-2
3.1.5 Image Soldier System 3-3
3.2 Black Diamond Advanced Technology − Modular Tactical System 3-4
3.2.1 General Information 3-4
3.2.2 Image Soldier System 3-5
3.3 Elbit – Dominator 3-5
3.3.1 General Information 3-5
3.3.2 Image Soldier System 3-6
3.4 Exelis − Individual Soldier System 3-6
3.4.1 General Information 3-6
3.4.2 Image Soldier System 3-7
3.5 Harris − Falcon Fighter Soldier System 3-7
3.5.1 General Information 3-7
3.5.2 Image Soldier System 3-8
3.6 QinetiQ North America − Integrated Warrior System 3-8
3.6.1 General Information 3-8
3.6.2 Image Soldier System 3-9
3.7 SAAB AB – 9Land Soldier 3-9
3.7.1 General Information 3-9
3.7.2 Power and Data Management 3-9
3.7.3 Components that Require Energy 3-10
3.7.4 Experience, Recommendations and Further Development 3-10
3.7.5 Image Soldier System 3-11
3.8 Sagem − C4ISTAR 3-11
3.8.1 General Information 3-11
3.8.2 Image Soldier System 3-12
3.9 Selex-ES − Soldato Futuro 3-12
3.9.1 General Information 3-12
3.9.2 Power and Data Management 3-13
3.9.3 Components that Require Energy 3-13
3.9.4 Experience, Recommendations and Further Development 3-14
3.9.5 Image Soldier System 3-14
3.10 EDA Developments 3-14
3.10.1 EDA − Standard Architecture for Soldier Systems 3-15
3.10.2 EDA CEDS − Combat Equipment for Dismounted Soldier 3-15
3.10.2.1 Power Supply 3-16

Chapter 4 − Trends and Trade-Offs 4-1
4.1 Trends 4-1
4.1.1 Integrated Soldier Systems 4-1
4.1.2 Modular Soldier Systems 4-1
4.1.2.1 System Configurations 4-2
4.1.2.2 Continuous Technology Development 4-2
4.1.3 Platform Development 4-2
4.1.3.1 COTS Integration 4-3
4.1.3.2 Vehicle Integration 4-3

4.1.4 Power 4-4
4.1.4.1 Weight and Energy Use of the Distribution System 4-4
4.1.4.2 Centralisation 4-4
4.1.4.3 Logistics 4-5
4.1.5 Cabling and Connectors 4-6
4.1.6 User Experience 4-7
4.1.6.1 Graceful Degradation 4-7
4.1.7 Interoperability 4-7
4.2 Trade-Offs 4-7
4.2.1 Functionality versus Weight 4-8
4.2.2 Centralized versus Decentralized Energy Source 4-8
4.2.3 Centralized versus Decentralized Power Management 4-9
4.2.4 Modular Tailored System versus 'One-For-All' 4-9
4.3 Next Step in Development 4-9

Chapter 5 – Conclusions 5-1

Chapter 6 – References 6-1

Annex A − Energy System Assessment Questionnaire A-1
A.1 System Description A-1
A.2 Power Management A-2
A.3 Data A-2
A.4 Experience A-3
A.5 Miscellaneous A-3

Annex B − Overview of the Results from the Dismounted Soldier System Questionnaire B-1

List of Figures

Figure		Page
Figure 2-1	Modular Tactical System from Black Diamond Advanced Technology	2-2
Figure 2-2	Lay-Out/Structure of the Modular Tactical System	2-3
Figure 2-3	Schematic Drawing of the LAND 75 in Development with Elbit	2-5
Figure 2-4	Soldier Combat Ensemble	2-6
Figure 2-5	Schematic Drawing of the Canadian ISPS	2-8
Figure 2-6	The ASAP Tactical Vest	2-9
Figure 2-7	Prototype ASAP Vest	2-9
Figure 2-8	Electronic Power Management System Prototype for Dismounted Soldier with the Soldier's Display, Savox Headset, Millog EO Sight, Digital Squad Radio (LV141), Savox Advanced Soldier Terminal, Energy Management Unit and the Control Express Finland PDA	2-11
Figure 2-9	Schematic Drawing of the Connections of the Prototype System	2-12
Figure 2-10	The Future Concept of the Electric Power Management of the Soldier System	2-12
Figure 2-11	The Modular Rechargeable Battery of the Future Power Management System	2-13
Figure 2-12	Energy and Data Transmission Network of the FÉLIN Soldier System	2-15
Figure 2-13	The FÉLIN Soldier System in Operation	2-15
Figure 2-14	Infanterist der Zukunft – Extended System (IdZ–ES)	2-18
Figure 2-15	Overview of All Devices Within the IdZ	2-18
Figure 2-16	Schematic Drawing of the Power and Data Flows Within the IdZ-ES Soldier System	2-19
Figure 2-17	Charger for the Centralized BT-70838 Rechargeable Li-Ion Batteries	2-19
Figure 2-18	Soldato Futuro Soldier System	2-21
Figure 2-19	Smart Vest for BeNeLux	2-23
Figure 2-20	Communication Structure of the Norman Soldier System	2-26
Figure 2-21	Lethality Subsystem	2-28
Figure 2-22	Current Soldier System Portugal	2-28
Figure 2-23	COMFUT System	2-29
Figure 2-24	MWTDP2 Technology Demonstrator	2-33
Figure 2-25	Schematic Drawing of the Generic Soldier Architecture	2-34
Figure 2-26	Schematic Representation of ISPDS	2-36
Figure 2-27	Photo of the ISPDS Configuration	2-36
Figure 2-28	Photo and Schematic Overview of the ISPDS Commander Full Configuration	2-37
Figure 2-29	Schematic of the Power and Data Spine; Cannon Nemesis Connector	2-38
Figure 2-30	Future Developments as a Layered USB Network – a So-Called "System-of-Systems"	2-38

Figure 2-31	Airmen Technology Equipment	2-41
Figure 2-32	Joint Infantry Company-Prototype Soldier System	2-44
Figure 2-33	Power Consumption of the Soldier Power System During an Exercise	2-44
Figure 3-1	Power Distribution Through the Soldier Vest	3-3
Figure 3-2	Smartphone End User Device can be Connected to the Spine® and Provides Status Information	3-4
Figure 3-3	Modular Tactical System Approach	3-5
Figure 3-4	Integration of the Dominator Within Other Platform Systems	3-6
Figure 3-5	The Exelis Individual Soldier System	3-7
Figure 3-6	FalconFighter® Soldier System	3-8
Figure 3-7	QinetiQ Integrated Warrior System	3-9
Figure 3-8	Schematic Drawing of the 9Land Soldier System	3-11
Figure 3-9	The Sagem C4ISTAR Solutions	3-12
Figure 3-10	The Soldato Futuro Soldier System	3-14
Figure 3-11	Soldato Futuro System Overview	3-14
Figure 4-1	Examples of Different Connectors for DSS	4-6
Figure 4-2	Trade-Off Between Functionality and Weight Burden	4-8

List of Tables

Table		Page
Table 1-1	National Solutions for Dismounted Soldier Systems	1-1
Table 1-2	Dismounted Soldier Systems, Contractor Funded	1-2
Table 4-1	Overview of the Development Status of the Dismounted Soldier Systems	4-1
Table 4-2	Overview of the System Configurations of the DSS from the Different Nations	4-2
Table 4-3	The Type of DSS – Single Supplier (Monolithic) vs. MoD as System Integrator (Open Platform)	4-3
Table 4-4	External Platform Power – Power Connections, Data Connection or Both	4-3
Table 4-5	Decentralized or Centralized Power Sources	4-5
Table 4-6	Hotswap Capability	4-5
Table 4-7	Cabling Within Dismounted Soldier Systems	4-6
Table 4-8	Data Protocol Used in the DSS	4-6
Table B-1	Overview of the Results from the Dismounted Soldier System Questionnaire – Part 1	B-1
Table B-2	Overview of the Results from the Dismounted Soldier System Questionnaire – Part 2	B-2

List of Acronyms

2IC	Second In Command
AECTP	Allied Environmental Conditions and Test Publication
AFSOC	Air Force Special Operations Command (United States)
ANAO	Australia's National Audit Office
ASAP	Advanced Soldier Adaptive Power (Canada)
AST	Advanced Soldier Terminal (Finland)
BMS	Battery Management System
C2	Command and Control
C4I	Command, Control, Communications, Computers, and Intelligence
CD&E	Concept Development and Experimentation
CEDS	Combat Equipment for Dismounted Soldier
CEDS-FSP	CEDS Feasibility Study Programme
CES	Central Energy Storage
COMFUT	Combatiente Futuro (Spain)
COTS	Commercial Off-The-Shelf
DC	Direct Current
DGA	Délégation Générale pour l'Armement
DoD	Department of Defence
DSS	Dismounted Soldier System
EDA	European Defence Agency
EMU	Energy Management Unit
ESS	Energy Supply System (Netherlands)
EUD	End User Device
FCS	Fire Control System
FÉLIN	Fantassin à Équipements et Liasions Intégrés (France)
GBA	Generic Base Architecture
GPS	Global Positioning System
GSA	Generic Soldier Architecture (United Kingdom)
GVA	Generic Vehicle Architecture
HF	High Frequency
HMD	Head Mounted Display
HMI	Human-Machine Interface
IdZ-BS	Infanterist der Zukunft – Basis System (Germany)
IdZ-ES	Infanterist der Zukunft – Erweitertes System (Germany)
IICS	Integrated Infantry Combat System (Elbit)
IPR	Individual Pocket Radio
ISAF	International Security Assistance Force (NATO operation in Afghanistan)
ISPDS	Integrated Soldier Power and Data System (United States)
ISPS	Integrated Soldier Power System
ISS	Individual Soldier System (Exelis)
ISS	Integrated Soldier System (Canada)

ISTAR	Information, Surveillance, Target Acquisition, and Reconnaissance
IWS	Integrated Warrior System (QinetiQ)
JFO	Joint Forward Observer
JTAC	Joint Terminal Attack Controller
LAVOSAR	Land Vehicles with Open System Architecture
LCG DSS	Land Capability Group Dismounted Soldier Systems
LOSA	Land Open System Architecture
MoD	Ministry of Defence
MOLLE	Modular Lightweight Load-carrying Equipment
MPPT	Maximum Power Point Tracking
MTS	Modular Tactical System (Black Diamond Advanced Technology)
MWPD	Man Worn Power and Data (United Kingdom)
NATO	North Atlantic Treaty Organization
NBC	Nuclear Biological Chemical
NGV	Night Vision Goggles
NGVA	NATO Generic Vehicle Architecture
NORMANS	Norwegian Modular Arctic Network Soldier (Norway)
OEM	Original Equipment Manufacturer
PA	Power Adaptor
PAN	Personal Area Network
PDA	Personal Display Assistant
PEP	Portable Electronic Platform (France)
RBP	Rechargeable Battery Pack
RF	Radio Frequency
RIF	Infantry Information Network (France)
SA	Situational Awareness
SCE	Soldier Combat Ensemble
SoC	State of Charge
SPC	Soldier Personnel Computer
SPS	Soldier Power System
STASS	Standardized Architecture for Soldier Systems
SWaP	Size, Weight and Power
TACP	Tactical Air Control Party (United States)
TDP	Technical Demonstration Programme
THOR	Tactical Headgear for Operational Requirements (Finland)
TMC	Tactical Mission Controller
TOC	Tactical Operations Centre
TRL	Technology Readiness Level
UAV	Unmanned Aerial Vehicle
USB	Universal Serial Bus
UTD	Universal Tactical Display
VDL	Video Down Link
VHF	Very High Frequency
VOSS	Verbeterd Operationeel Soldaat Systeem (Netherlands)

SET-206 Membership List

CHAIR

Mr. Marc David GIETTER*
US Army CERDEC
UNITED STATES
Email: marc.d.gietter.ctr@mail.mil

MEMBERS

Dr. Eddie ANDRUKAITIS
H/AVRS – Defence Research and Development
CANADA
Email: ed.andrukaitis@nrc-cnrc.gc.ca

Mr. Martin BOSTROM
Swedish Defence Material Administration
SWEDEN
Email: Martin.bostrom@hotmail.com

Dr. Darren J. BROWNING
Dstl
UNITED KINGDOM
Email: djbrowning@dstl.gov.uk

Dr. Carsten CREMERS
Fraunhofer Institute for Chemical Technology
GERMANY
Email: carsten.cremers@ict.fraunhofer.de

Mr. Peter FLOWERS
STSP-PGMO-Engr1
UNITED KINGDOM
Email: Peter.Flowers587@mod.gov.uk

Mr. Christopher John FORD
QinetiQ
UNITED KINGDOM
Email: cford@qinetiq.com

Mr. Johannes GROENEWEGEN*
DNV GL the Netherlands B.V.
NETHERLANDS
Email: jasper.groenewegen@dnvgl.com

Mr. James GUCINSKI
NSWC CRANE Tiburon Associates
UNITED STATES
Email: jag@rustynaileng.com

Mr. Robert James LUXTON
QinetiQ
UNITED KINGDOM
Email: rjluxton@qinetiq.com

Mr. Anders MATHIASEN
Defence Acquisition and Logistics Organization
DENMARK
Email: fmt-la-fko07@mil.dk

Mr. André OLIVEIRA
TEKEVER
PORTUGAL
Email: andre.oliveira@tekever.com

Mr. Pedro SINOGAS
TEKEVER
PORTUGAL
Email: pedro.sinogas@tekever.com

Dr. Raman TANDON
German Bundeswehr Research Institute
GERMANY
Email: ramantandon@bundeswehr.org

* Contributing Author.

CONTRIBUTING AUTHORS

Dr. Rianne 'T HOEN
DNV GL the Netherlands B.V.
NETHERLANDS
Email: Rianne.Hoen@dnvgl.com

Mr. Christiaan VAN SOEST
DNV GL the Netherlands B.V.
NETHERLANDS
Email: Christiaan.vanSoest@dnvgl.com

CONTRIBUTORS WITH INPUT VIA QUESTIONNAIRES

Name	Country	Soldier System	Institute	Email
Mr. Scott Osborn	Australia	L17/L75/L125	Diggerworks	scott.osborn@defence.gov.au
Dr. Paavo Raerinne	Finland	Warrior2020	FDF Defence Research Agency	paavo.raerinne@mil.fi
Dr. Karl-Heinz Rippert	Germany	IdZ	Bundeswehr	KarlHeinzRippert@bundeswehr.org
Dr. Raman Tandon	Germany		Bundeswehr	RamanTandon@bundeswehr.org
Mr. Fabrizio Parmeggiani	Italy	Soldato Futuro	Larimart	fabrizio.parmeggiani@larimart.it
Mr. Andre Oliveira	Portugal		Tekever	andre.oliveira@tekever.com
Mr. Richard Cross	United Kingdom	Broadsword	BAE Systems	Richard.P.Cross@baesystems.com
Mrs. Susan Torfin	United States	MERS Nett Warrior	USMC	susan.torfin@usmc.mil
Mr. Vijay P. Acharya	United States	Soldier Power	PM SWAR	vijay.p.acharya.civ@mail.mil
Mr. Jeff Kennedy	United States	TACP		

PANEL MENTOR

Mr. Nino SROUR
US Army Research Laboratory
UNITED STATES
Email: nassy.srour.civ@mail.mil

Overview of Dismounted Soldier Systems

(STO-TR-SET-206-Part-II)

Executive Summary

The NATO's Sensors and Electronics Technology Task Group on "Energy Generation for Manwearable/ Manportable Applications and Remote Sensors" (SET-206) conducted an assessment of the power and data distribution and system architecture of dismounted soldier systems, both currently in use and planned for the future. The goal of this assessment is to identify the trends and trade-offs regarding the dismounted soldier system solutions that are being offered, planned and/or procured.

The dismounted soldier system assessment is based on the information gathered via a questionnaire (Annex A) and publicly available documents. The dismounted soldier system as discussed in this document is defined as the combination of items that support the assigned mission, which is what the soldier either wears on his body and head, what he carries in his rucksack and what has been fitted to his weapon system. Every effort was taken to make this document as inclusive as possible, and to assure that the information contained herein is accurate and up to date. However, some information was unable to be obtained and may have changed since this report was initiated. As a consequence, some of the soldier systems are less extensively described than others and some of the information may be dated.

Most NATO countries have DSS modernization programmes running or at least have plans. Although different design choices are being made for the dismounted soldier systems, there are several general trends in the DSS development. The future soldier systems are developing into integrated soldier system solutions. These integrated DSS systems are usually modular systems, with a tailored DSS solution for the individual soldier. Typically, two or three system configurations exist. These dismounted soldier systems are developing into open platform systems. There is a clear trend from buying complete systems from single suppliers, towards a procurement process in which the MoD act as system integrator and have the industry to deliver them components.

There are also a few trends related to the power management of DSS. In general, DSS move from a completely decentralized power system into a mixed power system. A mixed system combines aspects of distributed and centralised architectures since they have a central power source connected to individual electronic devices, which may also have their own power sources for short periods of independent operation. The advantage of a mixed power architecture is that the use of central batteries decreases the logistics burden. To avoid that a DSS runs out of power, most nations consider graceful degradation of the power system, but are undecided on the implementation.

Currently, power distribution is achieved with ruggedized cabling and connectors. The trend in cabling is the movement from round cables to flat cables and e-textiles with conductors and EM shielding integrated in vests and harness fabrics. As data protocol, both USB (as more used in COTS end-items) and ethernet (integration in vehicles/battlefield management systems) are used.

Two trends have strongly increased the acceptance of new DSS by the soldiers:

1) There is a closer collaboration with the soldiers during the development of the DSS; and
2) There is more emphasis on the introduction of a new soldier system, for example by using training programs.

Most NATO countries agree that interoperability would be an interesting option, taking into account the increasing number of combined missions. However, interoperability is not considered to be a priority.

The next generation dismounted soldier system exists in a variety of lay-outs. No single optimal solution is available; there is always a trade-off between different design choices. The most important trade-offs for the design of a DSS are:

1) The advantages of increased functionality need to outweigh the disadvantages of increased physical and cognitive burden;
2) The choice between a centralized and decentralized system is the trade-off between weight and flexibility and robustness and reliability;
3) The advantage of tailored DSS solutions is that it limits the size, weight and power consumption, because everything the soldier carries is relevant for his/her mission. The advantage of a 'one-for-all' DSS system is that it simplifies logistics; and
4) The choice between one or more DSS configurations is the trade-off between on one hand weight and volume and on the other hand the logistic burden and costs.

Vue d'ensemble des systèmes pour fantassin

(STO-TR-SET-206-Part-II)

Synthèse

La commission de technologie des capteurs et des dispositifs électroniques (SET) de l'OTAN intitulée « Production d'énergie pour les applications portables et les capteurs à distance » (SET-206) a mené une évaluation de la répartition de l'alimentation et des données et de l'architecture des systèmes destinés aux fantassins, à la fois de ceux qui sont actuellement utilisés et de ceux prévus à l'avenir. Le but de cette évaluation était d'identifier les tendances et les compromis concernant les systèmes pour fantassin actuellement proposés, prévus à l'avenir et/ou achetés.

L'évaluation des systèmes pour fantassin s'est appuyée sur les informations réunies à l'aide d'un questionnaire (annexe A) et de documents accessibles au public. Le système pour fantassin (DSS) envisagé dans ce document est une association d'éléments qui appuient la mission assignée ; il se compose de ce que le soldat porte sur son corps et sa tête, ce qu'il transporte dans son sac à dos et ce qui a été ajouté à son système d'arme. Tout a été fait pour rendre ce document aussi complet que possible et veiller à ce que les informations présentées ici soient exactes et à jour. Cependant, certaines informations n'ont pas pu être obtenues et d'autres ont pu changer depuis que ce rapport a été commencé. En conséquence, certains des systèmes de soldat sont décrits moins précisément que d'autres et certaines des informations peuvent être dépassées.

La plupart des pays de l'OTAN ont entamé des programmes de modernisation des DSS ou en ont au moins le projet. Même si différents choix ont été faits dans la conception des systèmes pour fantassin, plusieurs tendances générales se dessinent. Les futurs systèmes pour les soldats se transforment en solutions intégrées. Ces systèmes DSS intégrés sont habituellement modulaires, avec une solution adaptée à chaque soldat. Il existe typiquement deux ou trois configurations de système. Ces systèmes pour fantassin évoluent vers des systèmes à plateforme ouverte. L'achat de systèmes complets à des fournisseurs uniques tend clairement à disparaître, au profit d'un processus d'achat dans lequel le ministère de la Défense joue le rôle d'intégrateur de système et fait en sorte que l'industrie lui fournisse des composants.

Il existe également quelques tendances liées à la gestion de l'alimentation des DSS. De manière générale, les DSS abandonnent les systèmes d'alimentation complètement décentralisés pour leur préférer un système d'alimentation mixte. Les systèmes mixtes associent des caractéristiques des architectures réparties et centralisées, puisqu'ils disposent d'une source d'énergie centrale reliée à des appareils électroniques qui peuvent également avoir leur propre alimentation pendant de courtes périodes de fonctionnement indépendant. L'avantage d'une architecture d'alimentation mixte est que l'utilisation de batteries centrales réduit la charge logistique. Pour éviter que les DSS tombent à court d'énergie, la plupart des pays envisagent une dégradation progressive du système d'alimentation, mais sont hésitants en matière de mise en œuvre.

Actuellement, la distribution de l'énergie dépend de connecteurs et de câbles renforcés. Dans le domaine du câblage, la tendance est à l'abandon des câbles ronds pour les câbles plats, aux textiles électroniques comportant des conducteurs et au blindage électromagnétique intégré dans le tissu des gilets et des harnais. Pour le protocole de données, l'USB (plus utilisé dans les articles commerciaux finaux) et l'Ethernet (intégration dans les véhicules / systèmes de gestion du champ de bataille) sont tous deux utilisés.

Deux tendances ont fortement accru l'acceptation des nouveaux DSS par les soldats :

1) D'une part, la collaboration s'est renforcée avec les soldats pendant le développement des DSS ; et

2) D'autre part, l'introduction de nouveaux systèmes pour soldat fait l'objet de plus d'attention, par exemple avec l'application de programmes d'entraînement.

La plupart des pays de l'OTAN conviennent que l'interopérabilité serait une option intéressante, compte tenu du nombre croissant de missions combinées. Toutefois, l'interopérabilité n'est pas considérée comme une priorité.

Il existe tout un éventail d'agencements différents au sein de la prochaine génération de systèmes pour fantassin. Aucune solution optimale ne domine, car un compromis est toujours nécessaire entre les différentes conceptions possibles. Les compromis les plus importants pour la conception d'un DSS sont les suivants :

1) Les avantages de la fonctionnalité accrue doivent contrebalancer les inconvénients de la charge physique et cognitive accrue ;
2) Le choix entre un système centralisé et décentralisé est un compromis entre poids et flexibilité d'une part, et robustesse et fiabilité, d'autre part ;
3) L'avantage des solutions de DSS sur mesure est qu'elles limitent la taille, le poids et la consommation électrique, parce que tout ce que le soldat transporte est pertinent pour sa mission ; l'avantage d'un DSS « unique pour tous » est qu'il simplifie la logistique ; et
4) Le choix entre une ou plusieurs configurations de DSS est le fruit d'un compromis entre le poids et le volume d'une part, et la charge et les coûts logistiques, d'autre part.

Chapter 1 – INTRODUCTION

1.1 GENERAL OVERVIEW

The NATO's Sensors and Electronics Technology Task Group on "Energy Generation for Manwearable/ Manportable Applications and Remote Sensors" (SET-206) conducted an assessment of the power and data distribution and system architecture of dismounted soldier systems, both currently in use and planned for the future. The dismounted soldier system is defined as the combination of items that support the assigned mission, which is what the soldier either wears on his body and head, what he carries in his rucksack and what has been fitted to his weapon system. The goal of this assessment is to identify the trends and trade-offs in the dismounted soldier system solutions that are being offered, planned and/ or procured.

This document is based on the information gathered via a questionnaire (Annex A) and publicly available documents. Every effort was taken to make this document as inclusive as possible, and to assure that the information contained herein is accurate and up to date. However, some information was unable to be obtained and may have changed since this report was initiated. As a consequence, some of the soldier systems are less extensively described than others and some of the information may be dated.

Integrated soldier power systems provide the potential to optimise energy usage of the soldier, with corresponding weight and logistics savings. The comparison of different soldier systems will focus on the power and data management, the components and user experiences. Where possible a general format has been applied to categorize the available data, see Section 1.3 for an overview of this format. Available information regarding the systems of different countries can be found in Chapter 2, whereas information regarding the systems from specific manufacturers is listed in Chapter 3. Please note that, in cases where no information regarding a system was shared or publicly available, the paragraph setup as defined by the general format was (partly) omitted.

In Chapter 4 the general trends and trade-offs are discussed in order to identify possibilities and barriers for interoperability in the soldier system architectures as currently fielded or in development. The general conclusions following from this document are presented in Chapter 5.

1.2 LIST OF SOLDIER SYSTEMS

The tables below provide an overview of the soldier systems that are described within this document.

Table 1-1: National Solutions for Dismounted Soldier Systems.

Country	Name Soldier System(s)	Manufacturer
Australia	Soldier Combat Ensemble	
	LAND 17	Black Diamond Advanced Technology
	LAND 75	Elbit
	LAND 125	(Unknown)
Canada	Integrated Soldier System	Industrial team led by Rheinmetall Canada
	Integrated Soldier Power System	(Not yet determined)
Finland	Warrior 2020	(Not specified)

Country	Name Soldier System(s)	Manufacturer
France	FÉLIN	Sagém
Germany	IdZ-ES	Rheinmetall
Italy	Soldato Futuro	Industrial team led by Selex Communications
Netherlands	VOSS	Elbit
Norway	NORMANS	Thales
Portugal		(Not specified)
Spain	COMFUT	(Not specified)
Turkey[1]	Tek Er	(Unknown)
United Kingdom	Generic Soldier Architecture	(Not yet determined)
United States	ISPDS (Nett Warrior)	Secure Comm
	SPIRIT	(Unknown)
	TACP development	(Not specified)
	Marine Corps JIP prototype	(Not specified)

Table 1-2: Dismounted Soldier Systems, Contractor Funded.

Manufacturer	Name Soldier System(s)	Country
BAE	Broadsword	*
Black Diamond Advanced Technology	Modular Tactical System	Australia
Elbit	Dominator	*
Exelis	Individual Soldier System	*
Harris	FalconFighter	*
SAAB AB	9Land Soldier	*
Sagém	FÉLIN	France
QinetiQ North America	Integrated Warrior System	*
Selex-ES	Soldato Futuro	Italy
Thales	NORMANS Light	Norway
	NORMANS Advanced	Norway

* These soldier systems are commercial available and not developed for a specific country.

1.3 GENERAL FORMAT

The information of each soldier system is structured as follows, in order to be able to easily compare the design choices of the dismounted soldier systems with each other.

[1] The Turkish Armed Forces is in the concept and development stage of the future dismounted soldier system "Tek Er". Since the project is in concept and development stage, there is very limited information available/known. Therefore, this report does not contain a specific section on the Tek Er DSS. Nevertheless, the system is included in Annex B.

1.3.1 General Information

A paragraph with general information describes the development, history, target group and amount of soldier systems that are or will be deployed. If available, the development stage is also specified:

Development Stage: The stages of development until full deployment of the dismounted soldier system that are utilized in this report are:

- Concept (development and experimentation).
- Procurement.
- Prototype (development and testing).
- Field trials.
- Fielding.
- Deployed.

1.3.2 Power and Data Management

The power and data paragraph consists of information on the power management system and power source, the cabling and data transfer protocols. Where available, the following aspects are described:

Manufacturer	The manufacturer of the soldier system/ programme.
System	The name of the soldier system.
Power system	Centralized or decentralized soldier power system. Within a centralized power system, there is one single central component that provides the power. In a decentralized power system, this task is distributed over a number of devices.
Power management system	The name and type of the component that manages the power.
Power source	The type and specifications of the central power source, such as the type of battery and energy content (in Ah).
Energy status display	The component that informs the soldier on the energy status display of the soldier system.
Average/peak power	The average and peak power requested by the soldier system.
Runtime of 1 battery	The typical time that the soldier system runs on 1 central battery.
Hotswap of battery	The possibility to exchange the battery without losing any data or information. The hotswap capability might be implemented using a second central battery or internal battery.
Backup when power is lost	How is power security implemented? For example, by using a hold-up battery in the essential devices.
Power management control	Where in the soldier system is the power management control functionality implemented?
Power management strategy	What is the power management strategy when the central battery is almost empty? For example, a warning message via the HMI or automatic shut-down of devices (graceful degradation).

Cabling	The type of cable and connectors. The cabling within the soldier system can use round cables, flat cables or smart e-textiles.
Power input	Which external power sources can be connected to the soldier system and specification of the interface, such as voltage range?
Power output	The number of connections and voltage range of the devices that can be connected to the soldier system.
Data transfer type	The type of data that can be transferred within the soldier system such as audio, text, video and location information.
Data protocol	The data protocol that is used to transfer the data. For example, USB, Ethernet, RS232, SMBus and VDL.
Data exchange	The possibility to exchange data with vehicle, base or other soldiers. If known, also specify the type of data and data protocol that is used.

1.3.3 Power Draw − Components that Require Energy

All energy consuming devices, which were mentioned in the questionnaire or found in public available information sources, are summarized in this paragraph. Where available, information is given on the energy supply of these components:

Power draw of power management	In case of a centralized system, the power draw of the power management and distribution capability.
Power draw of data control	In case of a centralized system, the power draw of the core computing capability.
Communication interface	The Human-Machine Interface (HMI).
Radio	Any available information concerning the soldier system radio.
GPS system	Any available information concerning the soldier system GPS.
Miscellaneous	Any available information concerning the soldier system miscellaneous components. Examples are a headset, optics, etc.

1.3.4 Experience, Recommendations and Further Development

This paragraph elaborates on the user experience of the soldier system. Also mentioned are strengths, recommendations and the next development steps as answered to the questionnaire.

1.3.5 Image Soldier System

The last paragraph ‘image soldier systems’ shows images and schematic drawings of the soldier systems.

Not all information could be mentioned in this soldier system overview for various reasons. Examples are:

- Not applicable: This item is not relevant, for example because it assumes a centralized power system.
- Not specified: This question was not answered in the questionnaire.

- Unknown: No information was shared via the questionnaire or available in the public domain.
- Proprietary: This is propriety information.

Chapter 2 − SOLDIER SYSTEM: NATIONS

2.1 AUSTRALIA − SOLDIER COMBAT ENSEMBLE

The Soldier Combat Ensemble (SCE) is designed so that it can be tailored to meet various user requirements. This means that the different types of combat uniforms, load carriage and body armour systems are utilized to meet the different roles and tasks defined as follows:

- Tier 1 systems for specialist unique roles such as tank crew.
- Tier 2 systems that focus on the dismounted close combatant.
- Tier 3 systems that are designed to be general purpose.

Currently, there are three projects regarding the Australian soldier energy system: LAND 17 [1], LAND 75 [2] and LAND 125 [3].

2.1.1 LAND 17 − Artillery Replacement

2.1.1.1 General Information

The LAND 17 programme [1], [4] is to provide the Joint Terminal Attack Controller (JTAC) and Joint Forward Observer (JFO) communities with enhanced Situational Awareness (SA) and management and execution of Offensive Support Missions through the introduction of an automated digital information exchange capability.

Development stage: Deployed in Operation Enduring Freedom, Afghanistan.

2.1.1.2 Power and Data Management

Manufacturer:	Black Diamond Advanced Technology
System:	Modular Tactical System [5]
Power system:	Centralized
Power management system:	Tactical Mission Controller
Power source:	BA-5590 / BB-2590
Energy status display:	Universal Tactical Display
Average/peak power:	Not specified
Runtime of 1 battery:	Not specified
Hotswap of battery:	Yes, the TMC has an internal battery
Backup when power is lost:	AA batteries, is however limited
Power management control:	None
Power management strategy:	None

Cabling:	Round cables
Power input:	9 – 35 V DC, An external power source is able to power the system and charge the batteries
Power output:	8 connections
Data transfer type:	Audio, data, and power
Data protocol:	2 x type A USB 2.0, circular USB, RS-232, audio in/out, VDL, Ethernet
Data exchange:	Possible, with classified data protocol

2.1.1.3 Components that Require Energy

Power manager:	Tactical Mission Controller (TMC)
Communication interface:	Universal Tactical Display
Radio:	AN/PRC: 148, 117G, 117F, 152; RT-1922; RF-7800S-TR; WaveRelay
GPS system:	Tactical GPS module [5] (SiRFstarIII or DAGR GPS)
Miscellaneous:	Not specified

2.1.1.4 Experience, Recommendations and Further Development

The experience (strengths, recommendations and next development steps) is not specified in the questionnaire.

2.1.1.5 Image Soldier System

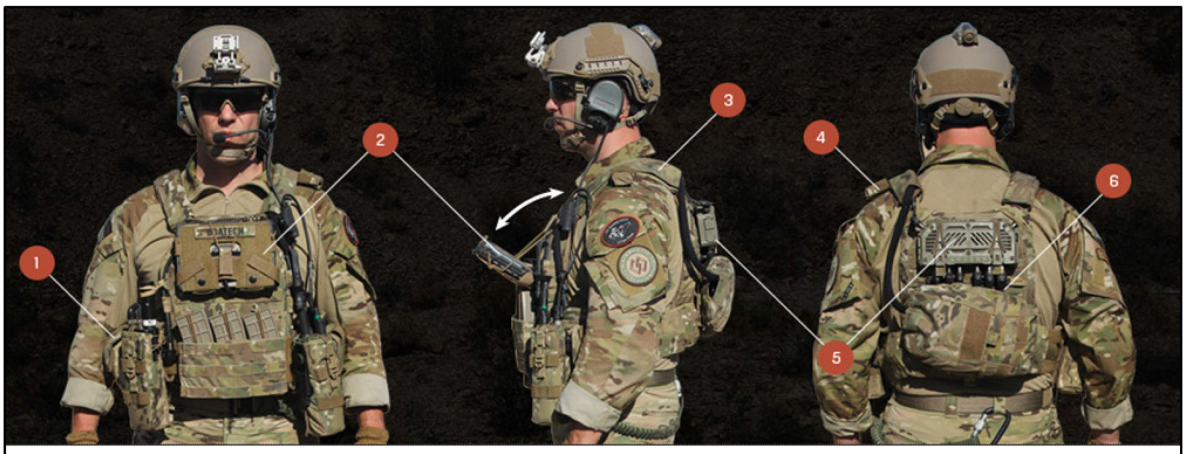

1. Tactical I/O Expansion Hub (interfaces USB and RS-232)
2. Universal Tactical Display (UTD)
3. Tactical Vests / Plate Carriers
4. GPS Module
5. Tactical Mission Controller; Computing core, system power manager, and peripheral controller
6. Cables & Cable Management. Round cables are routed through the vest and cummerbund.

Figure 2-1: Modular Tactical System from Black Diamond Advanced Technology [5].

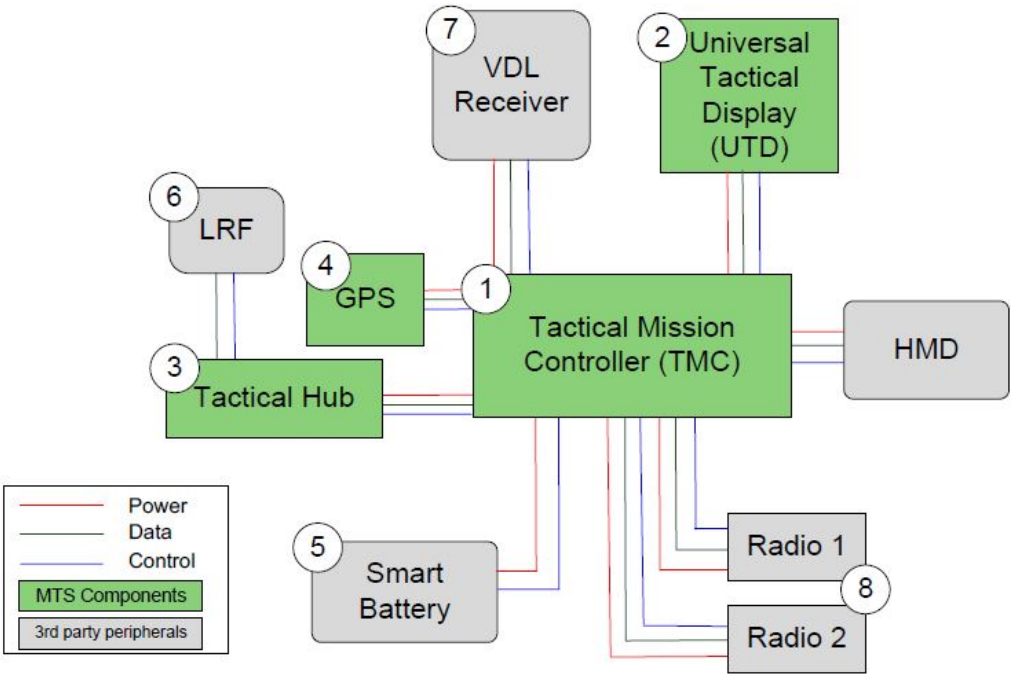

Figure 2-2: Lay-Out/Structure of the Modular Tactical System [6].

2.1.2 LAND 75 – Battle Management System

2.1.2.1 General Information

LAND 75 will deliver a Battle Management System (BMS), enabling increased situational awareness to every Commander in the Battle Group [2], [7]. Elbit Systems is awarded to supply the Battle Management Systems to the Australian Defence Forces [8], [9].

Elbit Systems' LAND 75 Phase 3.4/ LAND 125 Phase 3 BMS set will represent the core of the Australian Army's future BMS capability. It will be integrated in over 1,000 Army vehicles (BMS-M), and equip over 1,500 soldiers (BMS-D).

Development stage: Prototype.

2.1.2.2 Power and Data Management

Manufacturer:	Elbit
System:	Not specified
Power system:	Centralized
Power management system:	Power Distribution Unit
Power source:	Ruggedized batteries, Li-80/ Li-145
Energy status display:	Accessible via the graphical icons in the BMS software
Average/peak power:	Not specified
Runtime of 1 battery:	Requirement: 9 hrs mission

Hotswap of battery:	Yes
Backup when power is lost:	None
Power management control:	Not specified
Power management strategy:	None
Cabling:	Round cables
Power input:	Possible to connect to vehicle power source and DC power. The external power source is able to power the system and charge the batteries simultaneously.
Power output:	3 connections
Data transfer type:	Voice / situation awareness
Data protocol:	Proprietary
Data exchange:	Connection to vehicle is possible, protocol is proprietary

2.1.2.3 Components that Require Energy

Power management system:	Power Distribution Unit
Data control:	Personal Data Unit
Communication interface:	Tactical Display (Portable Ruggedized Touch Screen Monitor) Advanced Hand-Held Device (Eye Piece Display)
Radio:	Combat Network Radio / Tactical Data Radio / Personal Role Radio
GPS system:	GPS type not specified
Miscellaneous:	Headset (Silynx C4OPS [10] – AA battery (3.6 V/ 0.8 Ah))

2.1.2.4 Experience, Recommendations and Further Development

The strengths of the SCE system, as claimed by DSEO Software team/LEA/DMO [2], are:

- Highly modularised.
- Ability to hot swap power source.
- Relatively durable.

Areas that require improvement in the system, as claimed by DSEO Software team/LEA/DMO [2], are:

- Reduce weight.
- Increase the ability to transfer different types of data.
- Ergonomics requires improvement.
- Interoperability with other allied forces systems.

Recommendations for soldier system development, as claimed by DSEO Software team/LEA/DMO [2]:

- Develop different tiers of BMS soldier system that suit the needs of different levels of operators to reduce volume and weight. Not all operators require advanced features.
- Consider issue of security from the beginning of the development (critical design).

The next steps in the development of the SCE are the introduction of other sensors to feed into the soldier system and integration of different platforms with the soldier system into the System of System network architecture.

2.1.2.5 Image Soldier System

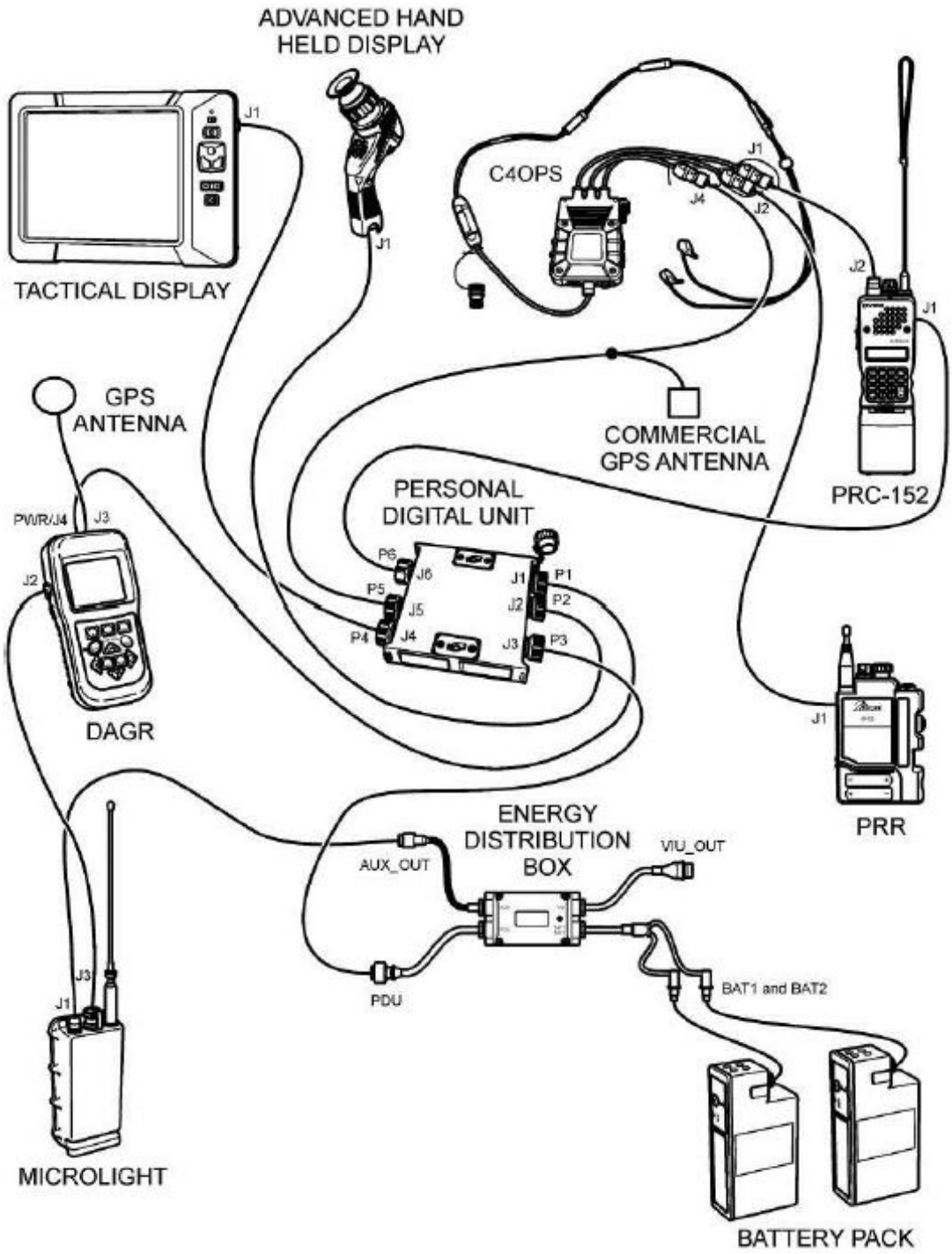

Figure 2-3: Schematic Drawing of the LAND 75 in Development with Elbit [8].

2.1.3 LAND 125

2.1.3.1 General Information

Australia's soldier modernisation effort, LAND 125, is the adaptive development of the SCE through a combination of soldier feedback, trials and the review of reports on defective or unsatisfactory materials [11]. Currently, the soldier power management system concept demonstrator targeting high power consuming roles in the Australian Army such as Signallers, Joint Fires and Team Commanders is under development. Therefore, it was not possible to complete the questionnaire.

Development stage: Concept (development and experimentation).

2.1.3.2 Image Soldier System

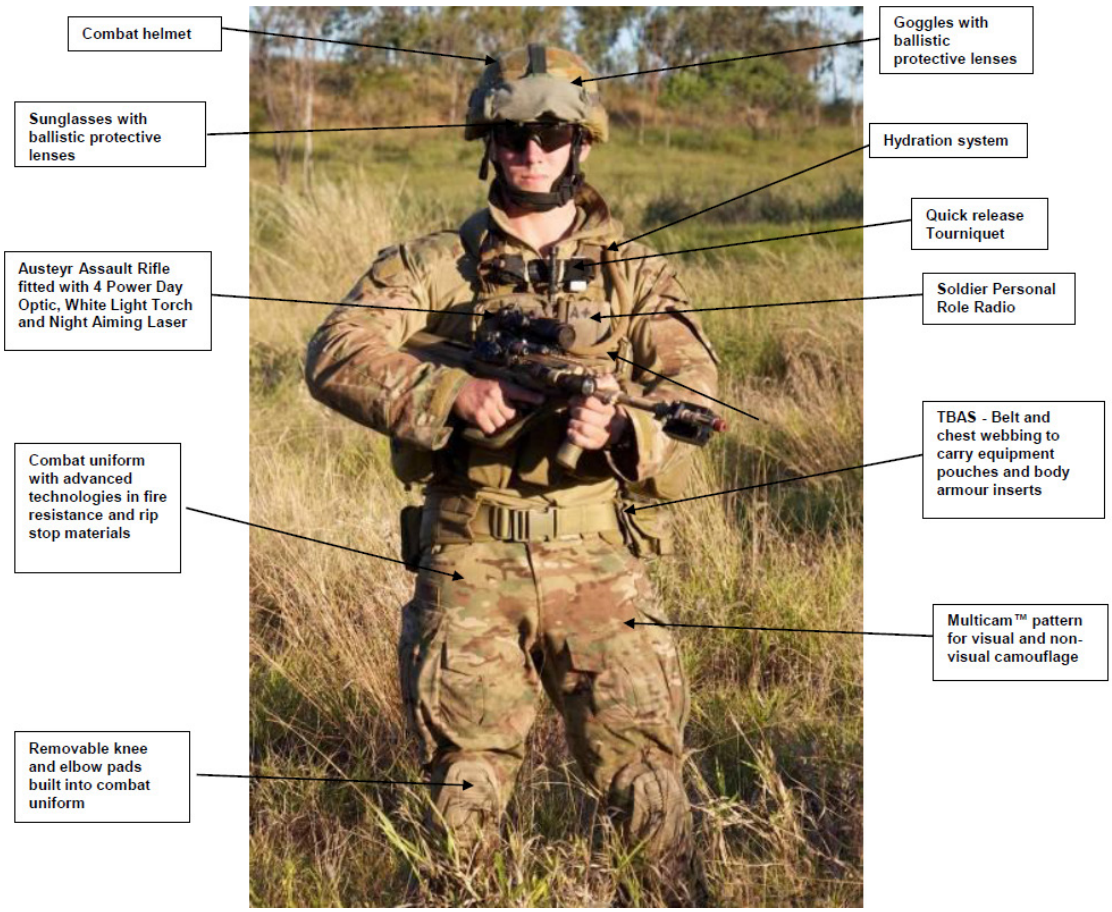

Figure 2-4: Soldier Combat Ensemble [12].

2.2 CANADA – INTEGRATED SOLDIER SYSTEM

2.2.1 General Information

The modular Integrated Soldier System (ISS) improves the situational awareness of the individual soldier and provides them with modernized and secure communication and navigation capabilities. The ISS can be integrated into the Canadian military's Land Command Support System.

The Canadian government has contracted Rheinmetall Canada to supply the Integrated Soldier System [13]. Rheinmetall Canada uses technology of Saab AB (display and energy system) and Invisio (headset). As prime contractor, Rheinmetall's Canadian subsidiary is responsible for system development and integration, programme management, and integrated logistics [14]. The ISS contract runs for four years. Rheinmetall must produce an initial run of equipment for testing by spring of 2016 before it is granted the full contracts. After the successful qualification of the system, Rheinmetall Canada will provide a total of 1632 units along with the associated preliminary integrated logistic support including technical documentation, training, and provisioning of spares. The contract also includes an option to purchase additional quantities of up to 2512 ISS suites [14].The ISS will be based on the 9Land system (SAAB). The 9Land soldier system will be described in Section 3.6.

Beyond the ISS, Canada is pursuing the development project of the Advanced Soldier Adaptive Power (ASAP) concept [15]. The ASAP concept is a wearable tactical vest that provides a backbone for power and data exchange between devices and power sources carried by the soldier. The devices and power sources can be plugged-in anywhere on the system using a common connector and common interface. Every available power sources can be connected to the system: batteries, fuel cells, energy harvesters, vehicles, power grid, generators or future energy sources. There is no central coordination (no master/ slave relationship), any node can control the system. This makes the system stable, since a single point of failure will not have any effect. Power and data routing will make use of improved software. The summary below applies to the ASAP with the Integrated Soldier Power System (ISPS) prototype.

Development stage:	Integrated Soldier System:	Field trials.
	Advanced Soldier Adaptive Power:	Prototype.

2.2.2 Power and Data Management

Manufacturer:	Not yet determined
System:	Advanced Soldier Adaptive Power/ ISPS prototype
Power system:	Decentralized Dynamic Power Management (no master/ slave)
Power management system:	Advanced Soldier Adaptive Power
Power source:	240 Wh / 1.3 kg (24 h mission), 350 Wh / 2.4 kg (72 h mission)
Energy status display	Not specified
Average/peak power:	9 W / 15 W
Runtime of 1 battery:	Not specified
Hotswap of battery:	2 x ISPS battery
Backup when power is lost:	Decentralized system
Power management control:	Any node can control the system
Power management strategy:	Not specified
Cabling:	Flat cables
Power input:	8 common connectors, integrated in the vest
Power output:	8 common connectors, integrated in the vest
External power sources:	Batteries, fuel cells, energy harvesters, vehicles, power grid, generators or future energy sources

Data transfer type:	Audio, situational awareness, text and video (optional)
Data protocol:	CAN-bus (2 Mbps)
Data exchange:	Not specified

2.2.3 Components that Require Energy

Power management:	Functionality is distributed over devices, no central data control unit
Communication interface:	Tactical User Interface
Radio:	Radio type not specified
GPS system:	GPS type not specified
Miscellaneous:	Flashlight, amongst other devices

2.2.4 Experience, Recommendations and Further Development

The strength of the soldier system is the decentralized Dynamic Power Management, without master/ slave relation. Therefore, there is no single point of failure.

Areas that require improvement in the system are: the ISPS is in development and decrease of weight is necessary.

Further development – The key emphasis for components of the ISS is on weight and burden reduction for all new items and modular integrated multifunction oriented procurements [16]. Here, the emphasis is on the importance of user feedback and trials.

2.2.5 Image Soldier System

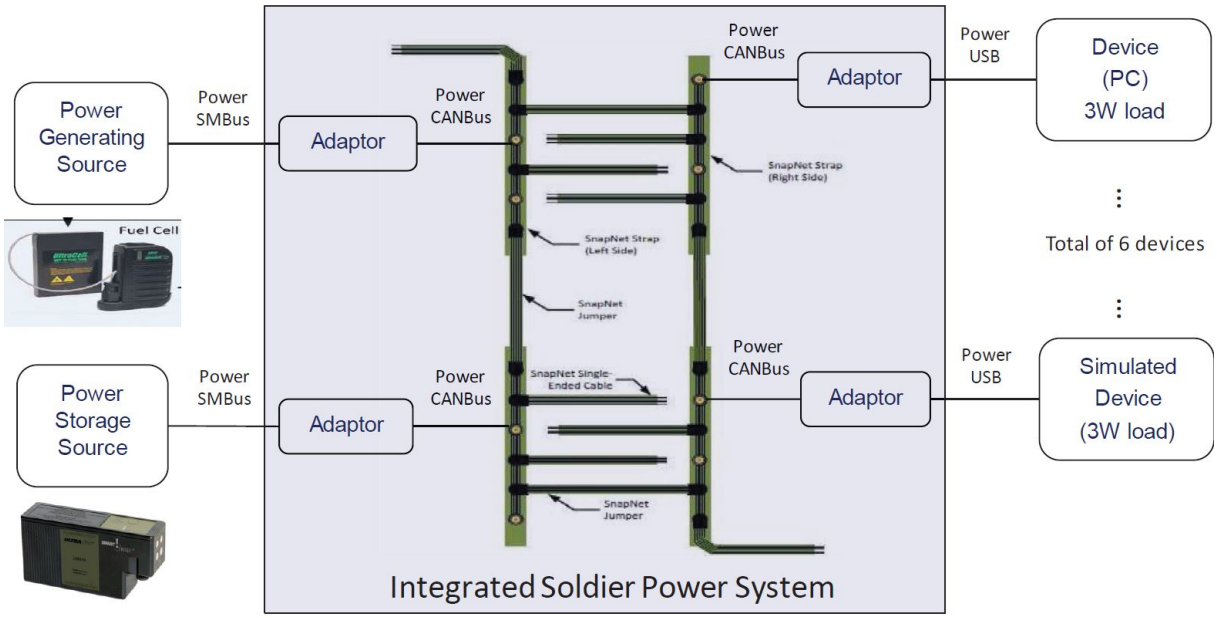

Figure 2-5: Schematic Drawing of the Canadian ISPS [15].

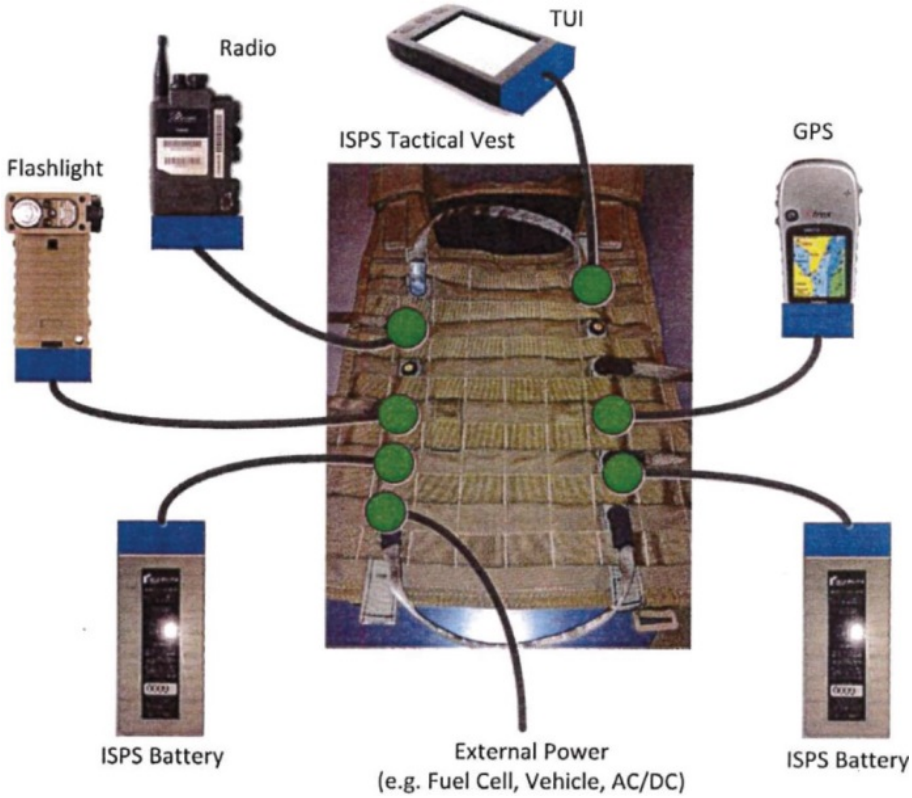

Figure 2-6: The ASAP Tactical Vest [15].

Figure 2-7: Prototype ASAP Vest [15].

2.3 FINLAND – WARRIOR 2020

2.3.1 General Information

Currently, the Finnish Army has a soldier system in operational use without a centralized power source [17]. The Finnish soldier modernization effort is the Warrior 2020 programme. The helmet component of this soldier system is the Tactical Headgear for Operational Requirements (THOR) and has been adopted by the Finnish Defence Forces. A prototype soldier system with a central energy control unit has been developed and tested. The summary below applies to the prototype system.

Development stage: Prototype.

2.3.2 Power and Data Management [17]

Manufacturer:	Not specified
System:	Not specified
Power system:	No centralized power source in operational use. A prototype system has been tested with energy control unit having 72 Wh internal battery SAFT Li-ion MP 174565.
Power management system:	Energy Management Unit (EMU)
Power source:	72 Wh, 1100 g (9 – 12.6 V)
Energy status display:	Soldier's display (PDA)
Average/peak power:	Unknown
Runtime of 1 battery:	Unknown
Hotswap of battery:	Not possible in the prototype system
Backup when power is lost:	There are backup batteries in each connected device
Power management control:	Power management functionality is included in the energy control unit
Power management strategy:	Not specified
Cabling:	Round cables with ODU MINI-SNAP K series 1 connectors
Power input:	With a special charger, external power sources can be connected to the system (e.g., Natek ML50 charger for TNC-2188 rechargeable battery)
Power output:	The prototype has 6 connectors, one master connector (with power and data) and five slave connectors for power
Identification:	No automatic recognition of the power source. The modular rechargeable battery communicates via SMBus protocol.
Data transfer type:	Mainly voice and text messages with special message scrambler (2 x AA)
Data protocol:	Not specified
Data exchange:	Not specified

2.3.3 Components that Require Energy

Power manager:	Savox advanced soldier terminal (AST)
Communication interface:	Light PDA for soldier, dedicated battery
	PDA for platoon leader Panasonic TF-53, dedicated battery
Radio:	Squad radio LV141 (Tadiran PRC-710)
	Personal role radio (field testing phase, in peacekeeping operation SELEX)
	VHF radio company LV241 (Tadiran PRC-930), TNC-2188 (12 V, 5 Ah)
	HF radio LV 641 (Tadiran PRC-6020) portable, dedicated battery
Miscellaneous:	Savox headset
	Millog LISA hand-held target acquisition system, 8 x AA or rechargeable
	Sagem MATIS thermal imager, (non)rechargeable battery
	Elcan Phantom IRxr uncooled LW thermal imager
	Image intensifiers Millog VV3X, VV2000 and VVLITE

2.3.4 Experience, Recommendations and Further Development

Not specified.

2.3.5 Image Soldier System

Figure 2-8: Electronic Power Management System Prototype for Dismounted Soldier with the Soldier's Display, Savox Headset, Millog EO Sight, Digital Squad Radio (LV141), Savox Advanced Soldier Terminal, Energy Management Unit and the Control Express Finland PDA [18].

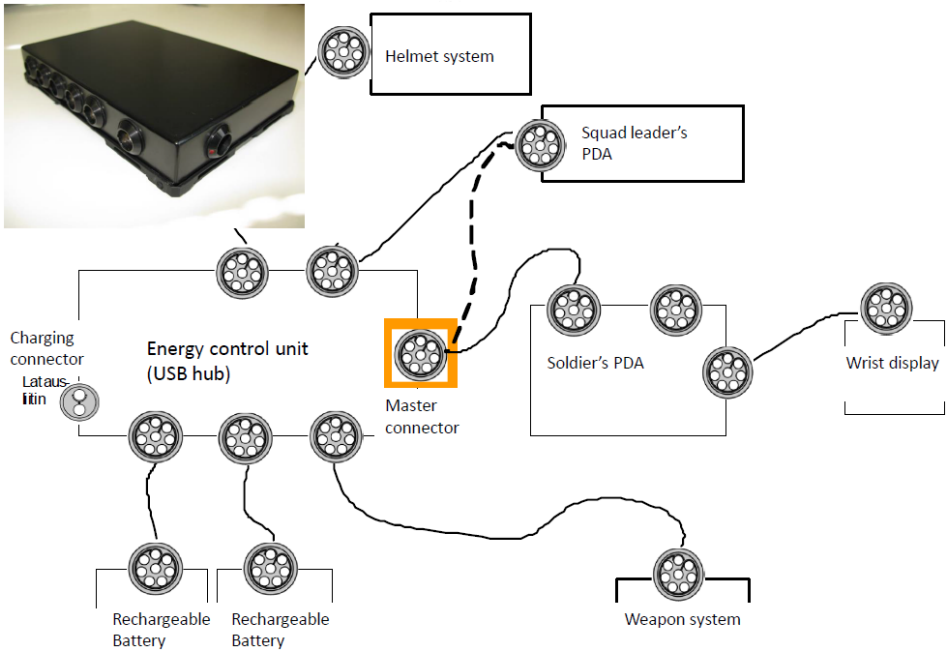

Figure 2-9: Schematic Drawing of the Connections of the Prototype System [18].

2.3.5.1 Future Soldier System

The two images below are visions for the future Finnish soldier system based on an energy control unit with modular batteries and connected devices with the same type modular batteries [17]. These modular batteries give 3 hours operating time independently of the central power source. The system can be charged from e.g. vehicle within 30 – 60 minutes. As an option, a 10 seconds' flash charge from another soldier's vest connector is applicable to give 15 – 30 minutes operating time.

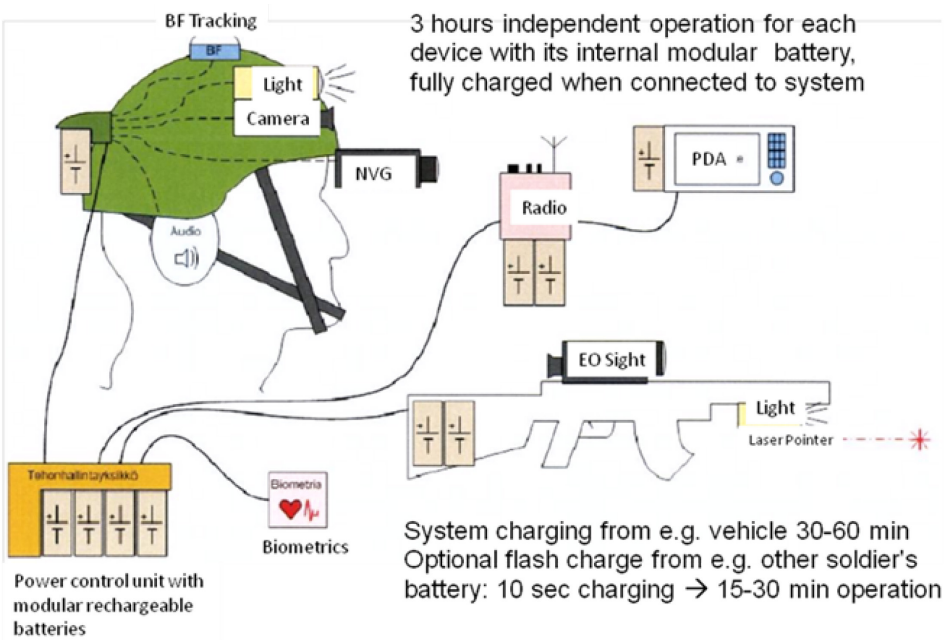

Figure 2-10: The Future Concept of the Electric Power Management of the Soldier System [17].

Figure 2-11: The Modular Rechargeable Battery of the Future Power Management System. These batteries have an energy content of 27 Wh (3 x 18650 Li-ion cells) and weigh 250 g. They have rotationally symmetric contact pins and communicate via SMBus to the system [17].

2.4 FRANCE − FÉLIN

2.4.1 General Information (Publicly Available Sources)

FÉLIN (Fantassin à Équipements et Liaisons Intégrés) is the French future infantry soldier system. The contract for the supply of FÉLIN has been awarded by the Délégation Générale pour l'Armement (DGA), the French Ministry of Defence Procurement Agency, to Sagem. Sagem will deliver up to 22,500 FÉLIN V1 sets for 20 infantry regiments and an additional 9,000 FÉLIN sets for use by the troops of the armoured, engineering and artillery regiments of the French Army. The French infantry troops were equipped with FÉLIN V1 in 2010 and the production of FÉLIN V2 is planned for 2015 [19], [20].

FÉLIN equips each individual soldier with a radio and Global Positioning System (GPS). Target weight of the system (FÉLIN, weapons, ammunition and 24-hour energy, food and water provision) is 25 kg. The RIF (infantry information network) is a voice and data network that connects the soldier to other infantrymen in the section and to the section commander. The commander is connected to the SITEL battle management system (developed by Sagem), which is located in a vehicle.

The Portable Electronic Platform (PEP) is the central part of the FÉLIN system. All electronic equipment of the vest is connected to the PEP. The system is connected via USB 2.0; this open data bus ensures interoperability. The system is powered with two rechargeable Li-ion batteries (Swiss Leclanché group).

Development stage: Deployed.

2.4.2 Power and Data Management

Manufacturer:	Sagém
System:	FÉLIN

Power system:	Centralized
Power management system:	Portable Electronic Platform
Power source:	Li-ion battery (48 h autonomous operation) [21]
Energy status display:	Unknown
Average/peak power:	Unknown
Runtime of 1 battery:	Unknown
Hotswap of battery:	Unknown
Backup when power is lost:	Unknown
Power management control:	Unknown
Power management strategy:	Unknown
Cabling:	Unknown
Power input:	Unknown
Power output:	Unknown
Data transfer type:	Voice / data
Data protocol:	USB 2.0
Data exchange:	Unknown

2.4.3 Components that Require Energy

Power manager:	Unknown
Communication interface:	Unknown
Radio:	Unknown
GPS system:	Unknown
Miscellaneous:	Unknown

2.4.4 Image Soldier System

Figure 2-12: Energy and Data Transmission Network of the FÉLIN Soldier System [21].

Afghanistan 2011 – 2012 **Mali 2013** **Central Africa 2014**

Figure 2-13: The FÉLIN Soldier System in Operation [21].

2.5 GERMANY – INFANTERIST DER ZUKUNFT ERWEITERE SYSTEM

2.5.1 General Information

The IdZ-BS (Infanterist der Zukunft – Basic System) is developed by EADS (European Aeronautic Defence and Space, since 2014: Airbus) electronics. 1600 of these IdZ-BS models have been delivered to the German Army between 2006 and 2007. The Bundeswehr awarded Rheinmetall Defence in September 2006 the contract to develop the IdZ V2 system, IdZ-ES (Infanterist der Zukunft – Extended System).

The IdZ soldier system is a modular dismounted soldier system with the following subsystems:

- Clothing, Protection and Personal Load Carry Equipment.
- Weapons, Sights and Sensors.
- Command, Control, Communication, Computers and Information (C4I).

The digital moving map display system shows the soldier's own position, the position of his comrades, the position of minefields and other danger zones, target and target course, target coordinates and the enemy situation. The current situation data is received from higher levels of command. Digital voice and data radio communications instantly provide the soldier with commands and reconnaissance data. The IdZ comes in three different configurations, being Squad Leader, Standard Soldier and Rifleman.

Development stage: Deployed.

2.5.2 Power and Data Management

Manufacturer:	Rheinmetall
System:	IDZ-ES
Power system:	Centralized for devices in the core system. Peripheral equipment like weapon – or surveillance – equipment use their own batteries.
Power management system:	Integrated in core computer
Power source:	2 x BT-70838, 70 Wh
Energy status display:	User information through HUD
Average/peak power:	Not specified
Runtime of 1 battery:	Not specified
Hotswap of battery:	Yes, two batteries are connected which are discharged sequentially
Backup when power is lost:	Hold-up batteries in core computer
Power management control:	Via display
Power management strategy:	Graceful degradation is intentionally not integrated
Cabling:	Round cables with ODU connectors
Power input:	Vehicle connection is possible, solar, mobile power generators
Power output:	Not specified

Data transfer type:	Not specified
Data protocol:	SMBus, Ethernet
Data exchange:	Not specified

2.5.3 Components that Require Energy

Data control:	Core computer (ARM-CPU)
Communication interface:	Portable control computer with OLED display
	GPS-integrated digital display / PDA
Radio:	Soldier: UHF FuGer SOLAR 400 EG (Thales Defence Germany)
	Soldier: VHF Handheld PRC-6809
	Commander: UHF FuGer SOLAR 400 V
	Commander: VHF FuGer PRC-6809 VA
GPS system:	GPS DAGR
Miscellaneous:	IdZ-ES Core system integrated chips
	Thermal Imager (WBZG – 9 W [standby], 17 W [in use]), with dedicated battery

2.5.4 Experience, Recommendations and Further Development

In general, the total system was well received by soldiers [22]. The ‘electronic back’ received the lowest score in an evaluation due to the human factors and weight, while not adding enough capabilities now that the RF link to vehicles is not yet implemented in the vehicles while the soldiers are carrying the capability for that link.

The next steps in the development of the soldier system are [23]: Use of the equipment in ISAF-Mission and tests of equipment at the Infantry School and Armor School; Integration of these experiences into the procurement of series; and to equip all infantry units in the Armed Forces.

2.5.5 Image Soldier System

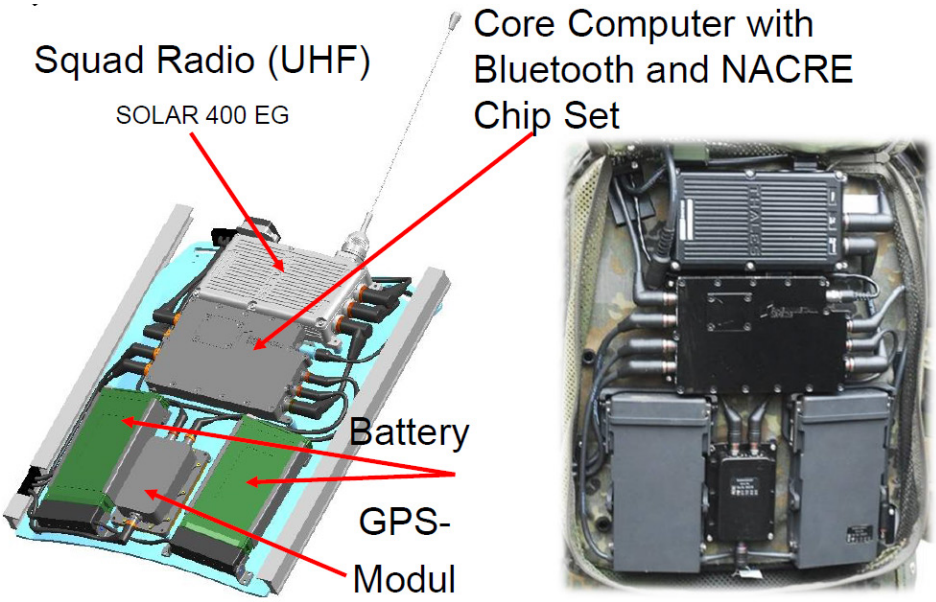

Figure 2-14: Infanterist der Zukunft – Extended System (IdZ–ES) [23].

Figure 2-15: Overview of All Devices Within the IdZ [22].

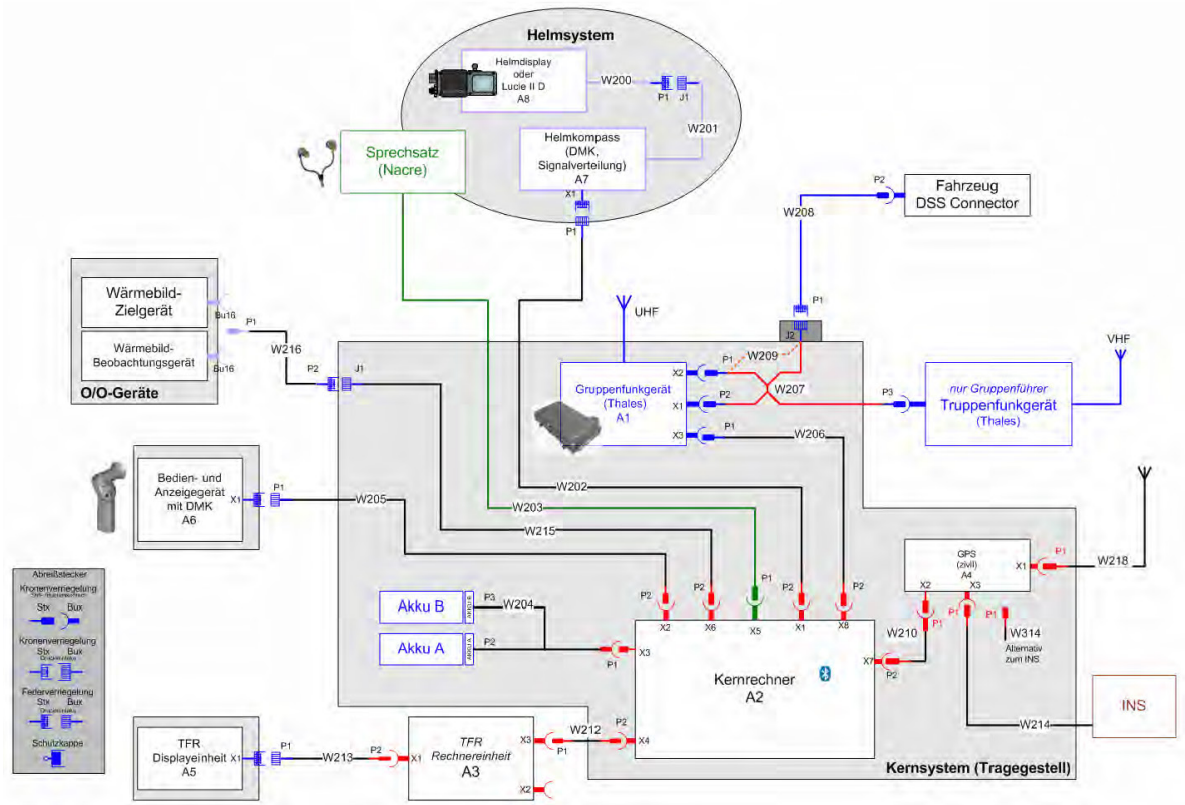

Figure 2-16: Schematic Drawing of the Power and Data Flows Within the IdZ-ES Soldier System [24].

Figure 2-17: Charger for the Centralized BT-70838 Rechargeable Li-Ion Batteries [25].

2.6 ITALY – SOLDATO FUTURO

2.6.1 General Information

An industrial team, led by Selex Communications (formerly Selenia Communications), is developing the Italian Soldato Futuro (future soldier system). This industrial team also includes Aero Sekur, Beretta, Galileo Avionica, Larimart and Sistema Compositi. Selex Communications developed the Soldato Futuro command and control system and was directly in charge of developing the software. Larimart Computer was responsible for provision of the command and control hardware. The Soldato Future has a touch screen for sending and receiving orders. Sistema Compositi and Selex Communications have developed the combined combat vest and universal support module. The general focus points of the development of the Soldato Futuro system are power supply, C4I and integration in digitization process.

Three prototype developments of the Soldato Futuro system have been completed. The Team Leader, Grenadier and Rifleman prototypes were delivered in 2007. The first version of the Soldato Futuro system was delivered to the Italian army in 2009. Nonetheless, the system was currently not yet fully deployed in 2015 [26]. The information within this paragraph is similar to Section 3.9, where the Selex-ES system is described.

Development stage: Fielding.

2.6.2 Power and Data Management

Manufacturer:	Industrial team led by Selex Communications
System:	Soldato Futuro
Power system:	Centralized
Power management system:	Power distribution and control unit
Power source:	10.8 V DC battery (75 Wh)
Energy status display:	At the display and by LEDs
Average/peak power:	Typically less than 10 W
Runtime of 1 battery:	Up to 12 hrs
Hotswap of battery:	Yes, WPC provides temporary power (30 s)
Backup when power is lost:	The individual batteries
Power management control:	PD&C distributes the energy to the devices and controls the consumption and status through a SMBus interface
Power management strategy:	A degradation strategy in order to preserve energy for essential services
Cabling:	Round cables
Power input:	12 – 24 V DC
Power output:	One for each component and one for auxiliary connection

Data transfer type:	Voice, situational awareness, video
Data protocol:	USB 1.1, USB 2.0 Ethernet 10/100 Base T
Data exchange:	Data exchange with vehicle is possible by Ethernet connection

2.6.3 Components that Require Energy

Data control:	Wearable computer	
Communication interface:	Display	
Radio:	Frontline Soldier Radio / Software Defined Radio (dedicated battery)	
GPS system:	Integrated with radio	
Miscellaneous:	Headset:	Head Mounted Optronic – dedicated battery
	Optronics:	Optronic Target Designator – dedicated battery

Note: All the dedicated batteries are rechargeable by the central power distribution unit.

2.6.4 Experience, Recommendations and Further Development

Unknown.

2.6.5 Image Soldier System

Figure 2-18: Soldato Futuro Soldier System [27].

2.7 NETHERLANDS – VERBETERD OPERATIONEEL SOLDAAT SYSTEEM

2.7.1 General Information

The Dutch soldier modernisation programme is called VOSS (Verbeterd Operationeel Soldaat Systeem). The smart vest, a ballistic vest with a mobile communication system, will be provided by the Israeli company Elbit. This Smart Vest is based on Elbit Systems' DOMINATOR system, designed to be lightweight, modular and scalable and will interface with existing systems. Thales Nederland will be responsible for the vehicle integration, battery and GPS. In early 2016 Defence expects the first trial series of 80 pieces. The introduction of the Smart Vest is planned from 2017. In total, there will be 5,500 pieces delivered [28], [29].

The mobile communication system is designed for soldiers. With a touchscreen soldiers are able to see each other's location, access and send information. Thanks to a radio with GPS receiver soldiers can communicate directly with the headquarters and other units. The Elbit's Dominator soldier solution for the Smart Vest Program:

- Provides the dismounted soldier with an all-in-one C2 suite – low power, weight and volume.
- Enables a modular and open system architecture design, providing a C4I and energy supply system ready to integrate future and legacy equipment.
- Enables integration with vehicle platforms providing power, data and intercom services.
- Enables power consumption optimization based on optimal computerized hardware devices operation.
- Provides and supports a variety of energy sources types and sizes for optimal mission usage.

The Dutch cannot disclose all information; therefore this paragraph deviates from the standard format.

Development stage: Prototype.

2.7.2 Power and Data Management

The Energy Supply System (ESS) in the Smart Vest is based on the Power Adaptor (PA), which controls the soldier system charging and power management capability. As the PA is embedded in the Radio component, a robust all-in-one solution is provided.

1) The ESS provides all necessary power supply and control along with data physical interface to all C4I elements in the system.
2) Centralized power source for powering all system components is a Li-ion based Rechargeable Battery Pack (RBP).
3) Provides hot swappable capability to support continuous operation while replacing RBPs.
4) Other power sources may be based on external sources such:
    - Vehicle outlet, through the Vehicle Integration Unit installed in the vehicle;
    - Fuel cells and the Fokker E-Lighter ® (a diesel-fuelled power source developed for the Dutch MOD); and
    - Any STANAG 4695 compatible source thus enabling continues operation and RBP charging.
5) RBP agnostic solution enabling the customer to upgrade RBPs to make use of the latest developments in battery chemistries and increased energy contents without a need for energy supply subsystem reconfiguration.

2.7.3 Image Soldier System

Figure 2-19: Smart Vest for BeNeLux [30].

2.8 NORWAY – NORMANS

2.8.1 General Information

The Norwegian soldier modernisation effort is the NORwegian Modular Arctic Network Soldier (NORMANS) programme. Between 2000 and 2005, the focus was on concept design, defining a modular approach and content for soldiers and commanders. The concept was tested and refined from 2005 to 2008 with focus on increasing combat efficiency and soldier safety. The modular configuration exists in two levels – NORMANS Light and NORMANS Advanced, where users can add functionality as required [31]. The Norman Soldier System is developed by Thales.

NORMANS Light is a straightforward navigation and communication unit that increases the soldier's situational awareness. The unit has a graphic display, providing the soldier with the relative positions of team members, observations, waypoints and predefined messages. The basic information that is available to the soldier answers to the questions: Where am I? Where am I going? Where is my team? Where is my enemy? and What are my tasks?

NORMANS Advanced is a system for commanders. It provides a constantly updated situation awareness picture, increasing control and strengthening the ability to command. The design focuses on mobility and

ease of use. NORMANS Advanced includes an interactive planning tool where waypoints, areas, routes and other critical information are entered into the map and distributed to the soldiers. The system facilitates fast mission planning, easily communicated orders, quick and accurate reporting and situational awareness.

Development stage: Fielding.

2.8.2 Power and Data Management [31]

Manufacturer:	Thales
System:	Normans light
Power system:	Not specified
Power management system:	Not specified
Power source:	Not specified
Energy status display:	Not specified
Average/peak power:	0.3 W (NOR light)
Runtime of 1 battery:	Not specified
Hotswap of battery:	Not specified
Backup when power is lost:	Not specified
Power management control:	Not specified
Power management strategy:	Not specified
Cabling:	Not specified
Power input:	5 – 18 VDC
Power output:	Not specified
Data transfer type:	Text messages, situational awareness
Data protocol:	USB, 2 x RS232, audio output
Data exchange:	Not specified

2.8.3 Components that Require Energy

Data control:	CPU: AVR32 (AT32UC3A0512) (64 KB RAM, 512 KB Flash)
Communication interface:	Display 2", 128 x 128 pixel resolution, 4-level grayscale
Radio:	Harris RF-7800S (Norw. GFE) Thales ST@R Mille Thales MBITR Clear Selex PRR
GPS system:	GPS w/Galileo support (embedded sensor)
Miscellaneous:	3D Digital compass (embedded sensor)

2.8.4 Power and Data Management [31]

Country:	Norway
System:	Normans Advanced
Power system:	Not specified
Power management system:	Not specified
Power source:	Not specified
Energy status display:	Not specified
Average/peak power:	4 W (active), 1 W (idle)
Runtime of 1 battery:	Not specified
Hotswap of battery:	Not specified
Backup when power is lost:	Not specified
Power management control:	Not specified
Power management strategy:	Not specified
Cabling:	Not specified
Power input:	5 – 28 VDC
Power output:	Not specified
Data transfer type:	Not specified
Data protocol:	USB 2.0 and USB OTG, Ethernet, RS232, RS422, RS485, S-Video output, headset, microphone, internal speaker, optional external active GPS antenna
Data exchange:	Bluetooth 2.1 + EDR, WLAN 802.11G

2.8.5 Components that Require Energy

Data control:	CPU: ARM® Cortex™ A8
Communication interface:	Display: 5", 800 x 480 pixel resolution
Radio:	Harris RF-7800S (Norw. GFE), Kongsberg Handheld MH300 VHF, Thales ST@R Mille, Thales MBITR Clear, Selex PRR
GPS system:	GPS w/Galileo support (embedded sensor)
Miscellaneous:	Digital compass, 3D accelerometer, gyroscope, barometer, microphone, brightness sensor for display (embedded sensors)

2.8.6 Experience, Recommendations and Further Development

Not specified.

2.8.7 Image Soldier System

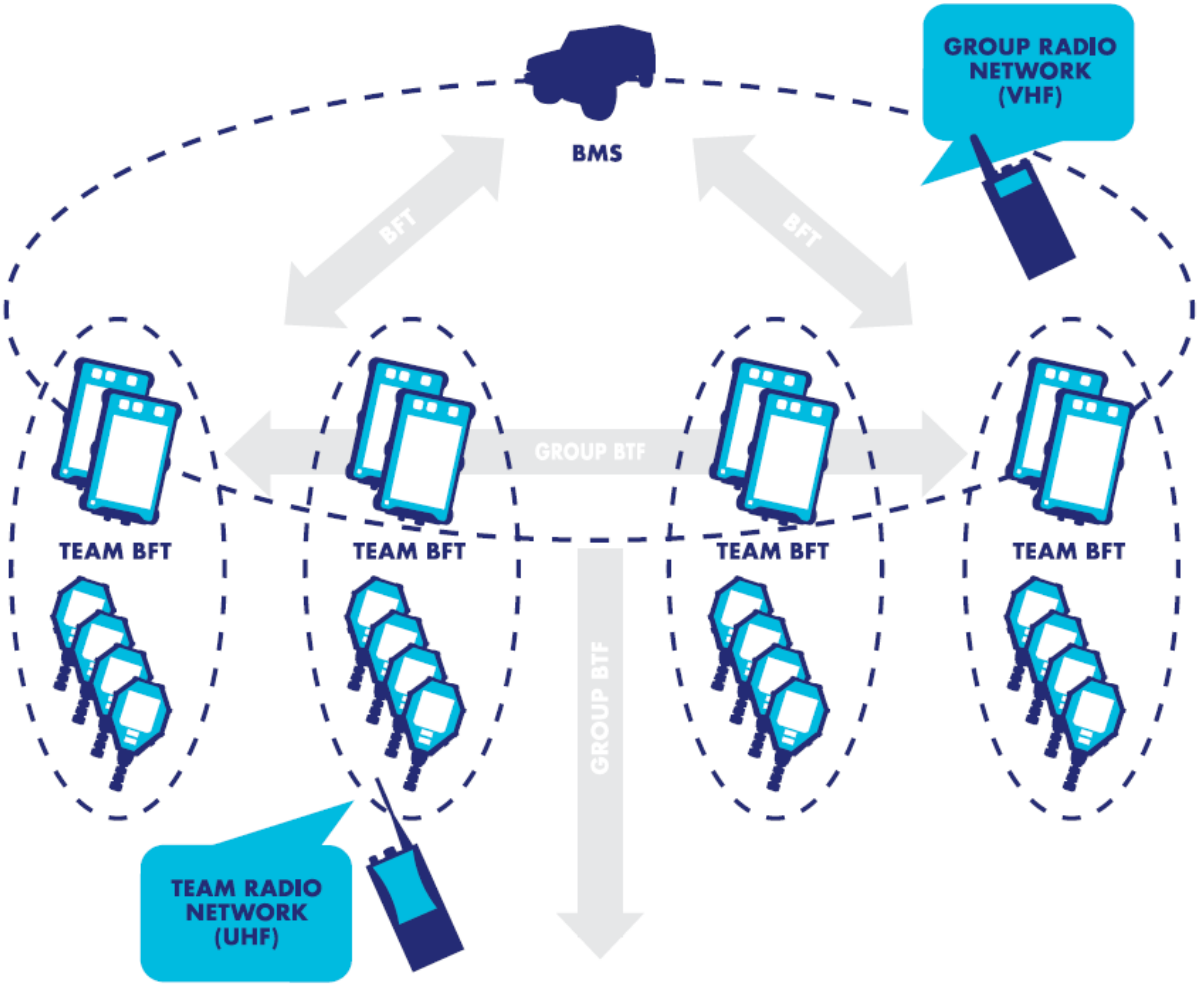

Figure 2-20: Communication Structure of the Norman Soldier System [31].

2.9 PORTUGAL

2.9.1 General Information

Portugal has no modernization effort for an integrated modular soldier system. The information below applies to their present system, where no centralized power source is used.

Development stage: Deployed.

2.9.2 Power and Data Management [32]

Manufacturer:	Not specified
System:	Not specified

Power system:	No centralized power system
Power management system:	Not applicable
Power source:	No centralized power system
Energy status display:	Not applicable
Average/peak power:	Not available
Runtime of 1 battery:	The mission profile for a typical mission of 24 hours will be 8 hours of continuous operation, 8 hours of stand-by and 8 hours of no operation and/or charging
Hotswap of battery:	Not applicable
Backup when power is lost:	Not applicable
Power management control:	Not applicable
Power management strategy:	Not applicable
Cabling:	Not applicable
Power input:	Not applicable
Power output:	Not applicable
Data transfer type:	There is no data transfer between components possible, only the capability to transmit for higher echelon
Data protocol:	Not applicable
Data exchange:	Only capability to transmit for a higher echelon (Company Level)

2.9.3 Components that Require Energy

Power manager:	Not applicable
Communication interface:	Not applicable
Radio:	PRC-525 (Li-ion), PCR-343 (2 x AA), Tactical radios (Team and Platoon)
Miscellaneous:	Aimpoint (AA), IR laser (2 x CR123A 3V Li), Night vision goggle (AA), Spectre optical sight (DL 1/3 N)

2.9.4 Experience, Recommendations and Further Development [32]

The strength of the Portuguese soldier system is reliability and robustness.

The most important area that requires improvement is the overall system interoperability.

Recommendations for main characteristics of a soldier system are: modularity, adaptability, incremental, reliability, disposability, degraded operation, interoperability and simplicity.

The next steps in the development of the Portuguese soldier system are the integration and interoperability with the Information, Surveillance, Target Acquisition, and Reconnaissance (ISTAR) capability.

2.9.5 Image Soldier System

(a) Weapon Sensors Module

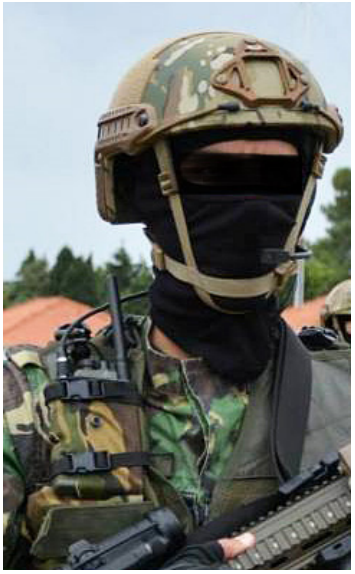

(b) Team Tactical Radio

Figure 2-21: Lethality Subsystem [32].

Figure 2-22: Current Soldier System Portugal [32].

2.10 SPAIN – COMBATIENTE FUTURO

2.10.1 General Information

The Spanish Armies 21st century is the COMFUT (COMbatiente FUTuro). COMFUT provides every squad member real-time command and control. The COMFUT system includes radio, GPS, helmet-mounted camera, night vision goggle, a portable computer and helmet and weapon connectivity. The C2 system will provide situational awareness with blue force tracking information: squad members and target position.

"The Combatiente Futuro (ComFut) programme concluded its design and development phase in November, a three-year process initiated in 2006, with a decision to extend a further year made in 2008 due to the complexity of the work. The next scheduled step was to be the launch of ComFut's production phase, or at least the preserial production phase. However, following the trial results which were not completed in the depth required, and other factors outside the programme, ComFut may embark upon a further redesign and additional trials" [33].

The Spanish Ministry of Defence indicated in response to the questionnaire that they consider the information confidential and cannot contribute to the study.

Development stage: Field trials.

2.10.2 Image Soldier System

Figure 2-23: COMFUT System [34].

2.11 UNITED KINGDOM − GENERIC SOLDIER ARCHITECTURE

2.11.1 General Information

The Generic Soldier Architecture (GSA) [35] is an integral part of Land Open System Architecture (LOSA) whose purpose is to provide system coherence and interoperability both within the Land Domain, centred on a deployable brigade, and with the other domains. It is an open, service based architecture for systems integration and interoperability in the Land Domain to deliver coherent, agile Force Elements.

The GSA is a platform specific architecture, the physical implementation of which is the Dismounted Soldier System (DSS). GSA defines the power and data infrastructure to be implemented by DSS and the characteristics of the interfaces. A mix of legacy and future procured GSA compliant role equipment must be supported on the soldier platform.

The GSA defines the on-the-man architecture, providing a modular approach that allows the architecture to support the different role equipment fits required for each member of the fire team, section or platoon.

The UK is currently developing the GSA DEF STAN 23-12 [35] into a mature standard, which in-turn will be used to govern all the equipment used by the Dismounted Soldier.

2.11.1.1 Purpose

The purpose of defining a GSA is to minimize the physical, operational and cognitive burden, to stimulate continuous improvement and to reduce costs.

Reduce burden:

- Enable ‘plug and play’ of legacy and future systems for soldiers.
- Reduce the Burden on the individual soldier from a weight, cognitive and thermal perspective.
- Improve operational effectiveness.

Continuous improvement:

- Promote innovation and diversity.
- Allow incremental improvement of systems.
- Facilitate technology insertion into existing systems.

Cost reduction:

- Provide interfaces that comply with publicly available open standards.
- Promote third party competition by providing modular components.
- Make best use of COTS.
- Reduce the whole life cost of ownership across all Defence Lines of Development.

2.11.1.2 Application

This GSA is applicable to the entire equipment ensemble of the DSS, ranging from simple to complex implementations. It will be applied to all future UK soldier platform capability procurements and equipment upgrade programmes.

2.11.1.3 Starting Points

- The GSA is a modular system designed for the highest energy intensive user (Second In Command – 2IC).
- The infrastructure and interfaces will be common for all roles the soldier will undertake and provides a soldier platform that is 'fitted for but not with'. This means that all similar connectors will be used in the vest.
- All data devices will use or be USB2.0 compatible to integrate into the soldier architecture.
- GSA role equipment may need to work independently of the GSA power infrastructure. The GSA architecture must be capable of powering role equipment and undertaking a recharge capability for any equipment internal batteries.
- Data on the soldier will be classified no higher than OFFICIAL (SENSITIVE). Any specific storage, access control and off soldier communication security requirements will be addressed on a case-by-case basis.

2.11.1.4 System Description

The GSA defines the data and power infrastructure requirements and physical interfaces for the soldier platform. The soldier architecture is partitioned into the Torso, Helmet and Weapon sub-architectures.

The GSA has Central Energy Storage on the Torso that may be either primary or secondary. Any secondary energy storage will be capable of being recharged using a Standard Role Equipment connector via a LOSA compliant architecture such as Generic Vehicle Architecture (GVA) or General Base Architecture (GBA). Where additional energy storage is required, primary or secondary auxiliary energy storage can be attached to the Torso using the Standard Role Equipment Connector. When auxiliary power supplies are fitted, the maximum power demand is restricted so as to not exceed the safe work power requirements of the GSA Infrastructure.

2.11.1.5 Man Worn Power and Data

The UK soldier system prototype is the Man Worn Power and Data (MWPD). The MWPD is being developed within the Technical Demonstration Programme (TDP) to inform development of the UK Generic Soldier Architecture (DEF STAN 23-12) [35]. The details of this system are included in the overview below.

Development stage: Prototype.

2.11.2 Power and Data Management

Manufacturer:	Not yet determined
System:	Open system power and data must conform with the relevant clauses of the latest UK Defence standard
Power system:	Centralised power source
Power management system:	Power and USB data
Power source:	Unknown at this stage, the UK is conducting research into a conformal power source

Energy status display:	Via an on-body end user device, the Soldier Personnel Computer
Average/peak power:	Must comply with the power budget requirements of the GSA
Runtime of 1 battery:	Unknown at this stage, however investigation on going to develop a power source which will comply with the Size, Weight and Power requirements of the GSA
Hotswap of battery:	Yes, possible
Backup when power is lost:	All devices used on the Dismounted Soldier will be supplied with a hold-up battery
Power management control:	All power and data will be managed by an on-body Soldier Personnel Computer (SPC)
Power management strategy:	The SPC will be capable of implementing a power management strategy
Cabling:	Smart Powered Textiles
Power input:	Capable of accepting power from any smart or standard DC source ranging from 10 V – 32 V
Power output:	To supply 6 – 8 output ports distributed on torso, head or weapon. External power source data connection: USB 2.0
Data transfer type:	Situational awareness, audio, text, video
Data protocol:	USB 2.0
Data exchange:	Vehicles, Base, and other Dismounted Soldiers

2.11.3 Components that Require Energy

Not yet decided.

2.11.4 Experience, Recommendations and Further Development

The strengths of the Generic Soldier Architecture are [35]:

- Enable ‘plug and play’ of legacy and future systems for soldiers.
- Provide interfaces that comply with publicly available open standards.
- Promote third party competition by providing modular components.
- Promote innovation and diversity.
- Allow incremental improvement of systems.
- Increase the synergistic exploitation of data and capabilities associated with soldier equipment.
- Facilitate technology insertion into existing systems.
- Reduce the burden on the individual soldier from a weight, cognitive and thermal perspective.
- Make best use of Commercial Off The Shelf (COTS).
- Improve operational effectiveness.
- Reduce the whole life cost of ownership across all Defence Lines of Development.

Areas that require improvement in the system are: Development the GSA to a mature level, to be used as a regulation for all future Dismounted Soldier equipment.

Recommendations for soldier system development: On-body real estate, confirmed positioning of equipment's, on-body power and data connector, on- and of-body data transfer.

The next steps in the development of the soldier system are:

- Development of a space model, which in turn will high light the properties of fixing connectors to fabrics.
- Research into all EMI issues for an on-body connector.
- Development of a working Technical Demonstrator Programme for a fully functional pre-production GSA, which can be introduced onto the Dismounted Soldier.
- Investigate a secure distribution network.

2.11.5 Image Soldier System

Figure 2-24: MWTDP2 Technology Demonstrator [36].

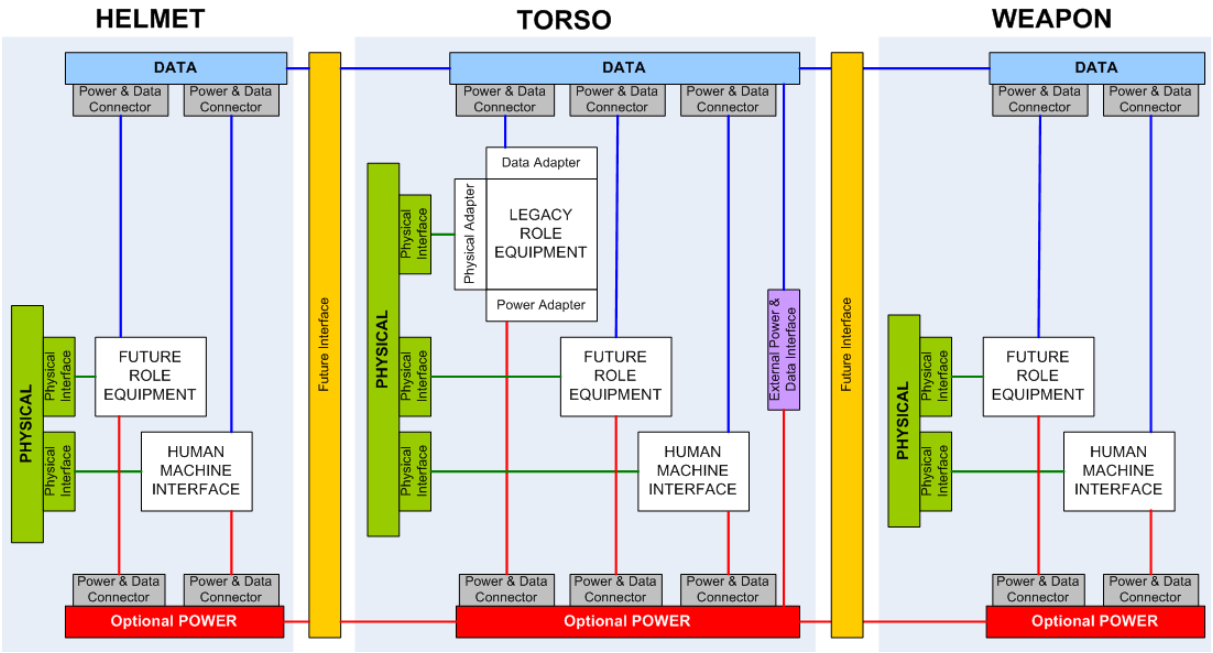

Figure 2-25: Schematic Drawing of the Generic Soldier Architecture [35].

2.12 UNITED STATES – INTEGRATED SOLDIER POWER AND DATA DEVELOPMENT (NETT WARRIOR)

2.12.1 General Information

The Nett Warrior is the successor of the Land Warrior [37]. The Land Warrior soldier modernization project used the traditional approach for development: first the selection of a prime integrator and then this integrator built a consortium of subcontractors to develop the pieces of the system. Although several important concepts were demonstrated by the Land Warrior system, soldiers ultimately rejected it, because the system was too heavy to use in combat. Additionally, by the time it was ready for fielding, the components were already obsolete. In 2010, a new concept, the Nett Warrior, was started [38].

The goal of the Nett Warrior, 'to improve situational awareness and communication for soldiers', is the same as for Land Warrior, the method however very different. Instead of a defence contractor with in-house manufacturing, COTS technology is utilized and integrated with existing military hardware. The Nett Warrior showed that existing commercial technology could be quickly and effectively combined with military hardware and software to make effective military systems for a soldier.

Another important advance was the introduction of very regular field testing, on one hand to prove the capability of new software and hardware component and on the other hand to get real end-user feedback early in the process. The feedback is rapid, through regular Network Integration Evaluations. Currently the focus is on integrating ISPDS (Integrated Soldier Power and Data System).

Development stage: Fielding.

2.12.2 Power and Data Management

Manufacturer:	Secure Comm [39]
System:	ISPDS integration with Nett Warrior
Power system:	Centralized power source
Power management system:	Power and data distribution hub
Power source:	Conformal Wearable Battery
Energy status display:	Via an application on the end-user device (smartphone)
Average/peak power:	On-going characterisation
Runtime of 1 battery:	24 hrs is the goal, likely less
Hotswap of battery:	Yes, possible
Backup when power is lost:	The embedded devices have their own power source. However, the interconnectivity with the hub would be lost.
Power management control:	Power and data distribution hub would provide power management to charge/discharge to connected power sources
Power management strategy:	Talking about implementation of power management strategy when battery level is low
Cabling:	Round cables with a 6 pin connector
Power input:	Kinetic external power sources will communicate using SMBus. For solar MPPT (maximum power point tracking) is built into the device.
Power output:	Depends on model, but from 4 – 5 outputs
Identification:	SM bus communication
Data transfer type:	Situational awareness (PLI), audio, text, video
Data protocol:	USB
Data exchange:	No data exchange with vehicle, only power exchange

2.12.3 Components that Require Energy [40]

Data control:	Wearable Computer/End User Device (Smartphone)
Communication interface:	Smartphone (Samsung Galaxy S5) – dedicated battery
Radio:	MBITR Radio 148 (different versions) – dedicated battery
	Rifleman Radio 154A (different versions) – dedicated battery
GPS system:	DAGR GPS Device – dedicated battery
Miscellaneous:	Other future components (Laser range finder, chargers for AA/AAA, etc.)

2.12.4 Experience, Recommendations and Further Development [40]

The strengths of the soldier system are: 'Centralized source, maintain enumeration in over current state via dedicated USB lines'.

Area's that require improvement in the system are: 'Alternate power source identification, charge circuitry cables/ connectors, adaptors'.

Recommendations for soldier system development: 'Focus on adaptors'.

The next steps in the development of the soldier system are: 'Wireless. New radio batteries for streamlined integration with centralized power source.'

2.12.5 Image Soldier System

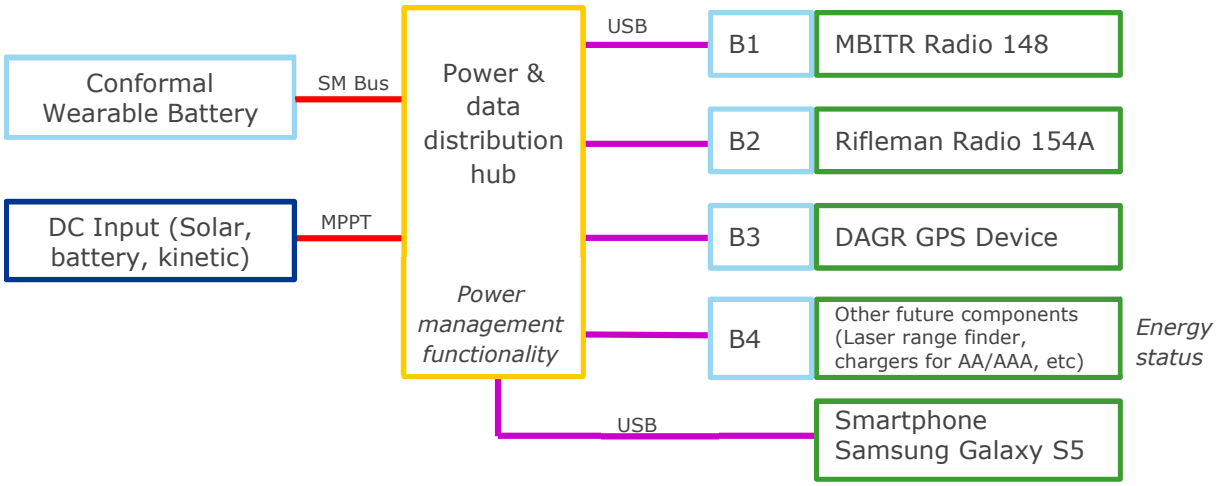

Figure 2-26: Schematic Representation of ISPDS.

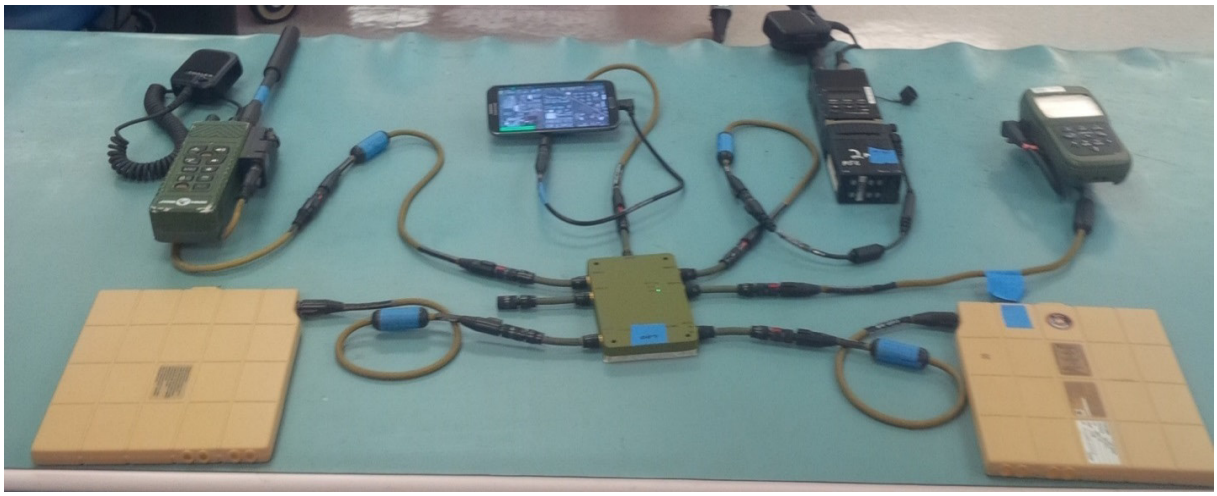

Figure 2-27: Photo of the ISPDS Configuration.

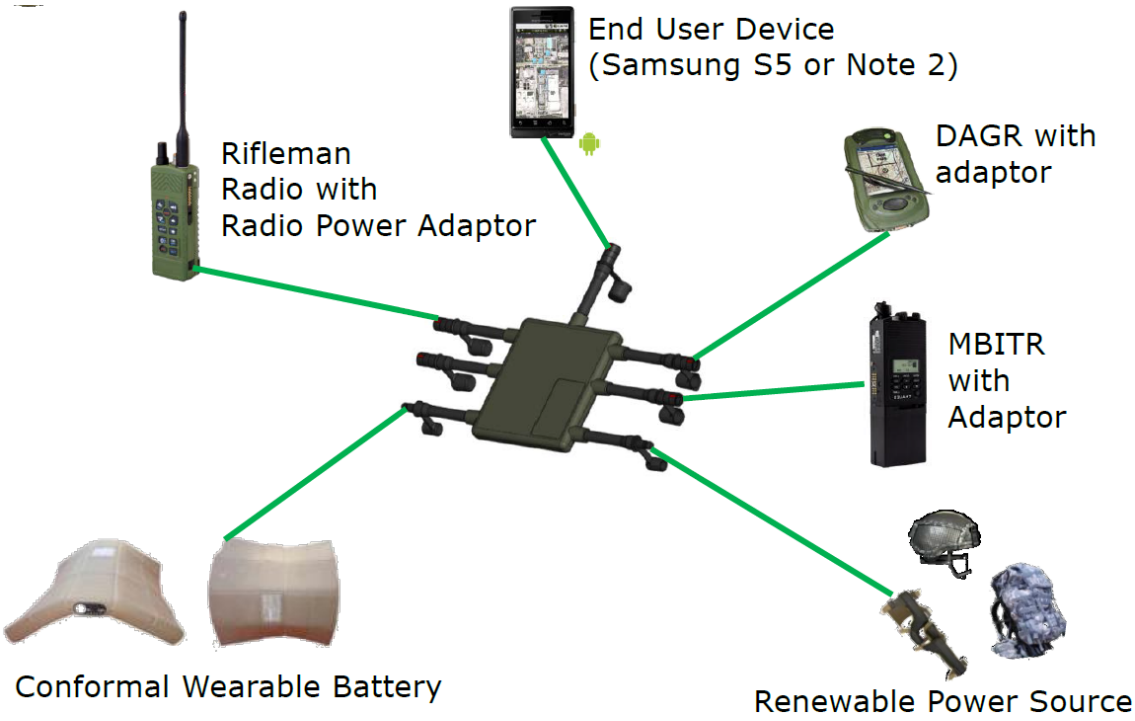

Figure 2-28: Photo and Schematic Overview of the ISPDS Commander Full Configuration[1].

2.13 UNITED STATES – SPIRIT

2.13.1 General Information

The BAE/ITL power and data SPIRIT vest is a prototype (TRL 6 – 7), and being field tested under operational conditions [41].

Development stage: Field testing.

2.13.2 Power and Data Management

The system consists of a Samsung galaxy note II device as mobile host, an e-textile integrated into the vest, being able to conduct power and data, a power and data manager called "Spine", 8 ITT nemesis connectors per vest in order to connect external devices, a Central Energy Storage (CES) and an optional inductive charging kit for contactless recharging.

The e-textile integrated in the vest or a harness is a woven conductive yarn out of which a power and distribution network is created. Since the whole harness/vest is the network itself there is no single point of failure, even if the system has holes in it.

A power and data spine is the power and data management system integrated in the e-textile, which is very lightweight in comparison to comparable solutions. There are 8 ITT Cannon Nemesis Connectors per vest. The fully protected (over current/voltage) data/power ports are capable of supplying 5A and operate at USB 2.0 speed. They are dust and waterproof. All connection points can provide power and data to the connected equipment.

[1] As shown at LCG-DSS ToE briefing.

The whole system is powered by Denchi power supplies as CES. The CES is based on Li-Ion technology and is a smart battery being able to be charged inductively when sitting in a vehicle seat. The battery can also be charged in the conventional way.

2.13.3 Experience, Recommendations and Further Development

Future developments of the BAE/ITL man worn power and data vest will focus on the system integration and a layered USB network. The so called "systems-of-systems" should include different layers of garment with defined electrical functions. A tree-shaped USB network shall be quickly and intuitively configured to task, simply by layering the appropriate garments.

2.13.4 Image Soldier System

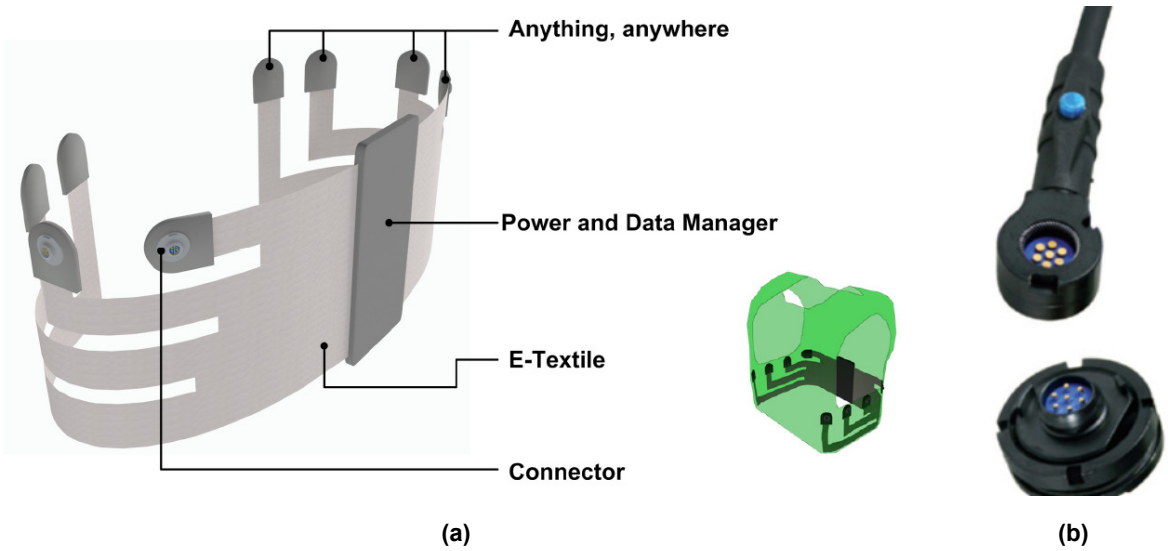

Figure 2-29: (a) Schematic of the Power and Data Spine; (b) Cannon Nemesis Connector [42].

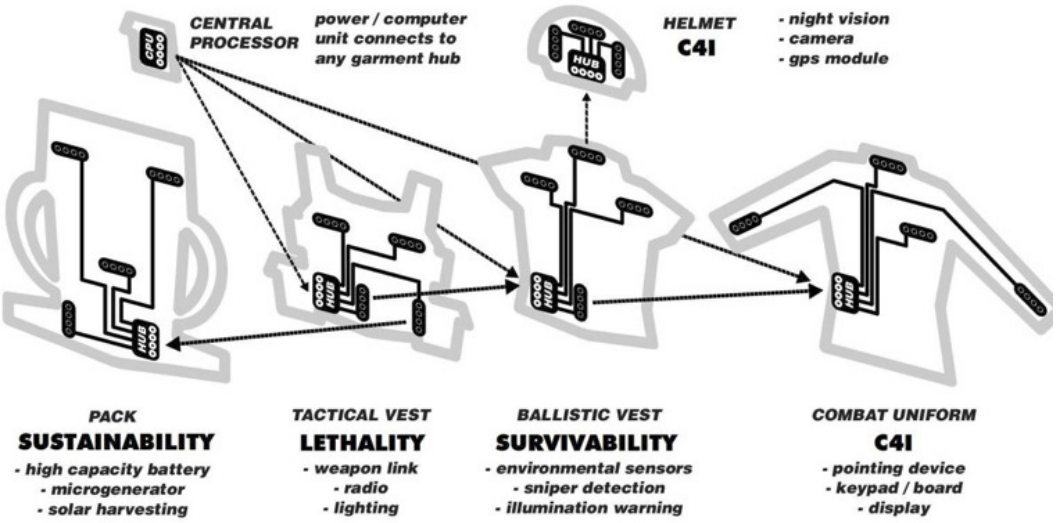

Figure 2-30: Future Developments as a Layered USB Network – a So-Called "System-of-Systems" [42].

2.14 UNITED STATES (AIR FORCE) − TACTICAL AIR CONTROL PARTY DEVELOPMENT

2.14.1 General Information

The modernization effort of the TACP (Tactical Air Control Party) could be ready for field use in the first quarter of 2016 [43]. The TACP-modernization focuses on reducing reliance on voice transmission and replacing analogue equipment with the latest data link and streaming video technology in order to meet the needs of a modern-day ground and cyber battlefield. They do this by addressing three main areas: mounted, dismounted equipment and communication software.

The state-of-the art dismounted soldier technology introduction consists of fielding multiband manpack radios in 2010, followed by small wearable computers in 2011. Within the same year, pocket laser range finders, handheld laser markers and mini thermal monoculars also entered field testing. Later in 2013, equipment such as full motion video receivers and TOC light/heavy computers found their way onto the battlefield [44]. TACP's operate a wide variety of dismounted field equipment as individual items. Some can be connected, such as connecting a laser range finder and GPS to provide accurate target coordinates.

TACP-modernization moves toward acquiring more efficient pieces of dismounted equipment, because efficiency, size and weight impact the performance of the soldier. Therefore, small wearable computers are being replaced by TACP computer kits, which are comprised of an integrated computer, vest and cable systems. This Android tactical assault kit that has been fielded to AFSOC (Air Force Special Operations Command) units displays moving maps, and overlays the positions of friendly forces.

Development stage: Field testing.

2.14.2 Power and Data Management [45]

Manufacturer:	Not specified
System:	Not specified
Power system:	Not specified
Power management system:	Battlefield Airman Operational Control System (OCS) – Not fielded yet, currently in Source Selection
Power source:	BA-5590 or any 90-series battery (depends on source selection)
Energy status display:	Not specified
Average/peak power:	Not specified
Runtime of 1 battery:	OCS is undefined / Peripheral device run time varies based on use
Hotswap of battery:	Not specified
Backup when power is lost:	Not specified
Power management control:	Not specified
Power management strategy:	Not specified

Cabling:	Not yet defined
Power input:	Not specified
Power output:	Not specified
Data transfer type:	Full Motion Video from ISR / CAS aircraft / TX and RV multiple MIL-STD digital messaging protocols
Data protocol:	**S**erial (DAGR) / serial or USB (PLRF-15C)
Data exchange:	Not planned

2.14.3 Components that Require Energy

Radio:	Two PRC-148 or PRC-152 Tactical Radios, OEM rechargeable battery or multiple CR-123s with adapter
GPS system:	PSN-13A DAGR GPS, AA battery
Optronics:	Night Vision Goggles, PVS-14, PVS-31, AA battery
	PLRF-15C Laser Range Finder, AA battery
	IZLID 1000P, IR Pointer, AA battery
Miscellaneous:	Miniaturized weather sensor
	Wearable antenna for covert communications

2.14.4 Experience, Recommendations and Further Development

The strengths of the soldier system are: The new systems are smaller, lighter and more commercial-like than the existing gear [43].

2.14.5 Image Soldier System

Figure 2-31: Airmen Technology Equipment [44].

2.15 UNITED STATES (MARINE CORPS) – JOINT INFANTRY COMPANY PROTOTYPE

2.15.1 General Information

The Marine Corps is planning the next generation soldier system. For this purpose, the Joint Infantry Company Prototype is being developed (Figure 2-32). The summary below applies to the desired future soldier system.

Development stage: Prototype.

2.15.2 Power and Data Management [46]

Manufacturer:	Not specified
System:	Not specified
Power system:	A centralized power system is desired.
Power management system:	Not specified
Power source:	Not specified
Energy status display:	There will be a low power indicator on the device and a battery SoC query on central display. Some end items (optics) provide estimated battery life remaining, but it is independent to the legacy device.
Average/peak power:	Not available
Runtime of 1 battery:	72 h is desired
Hotswap of battery:	Desired: yes
Backup when power is lost:	Battery within the power consuming device
Power management control:	This may vary by device because of different teams/roles. For worn devices, a central power manager in the EUD is desired.
Power management strategy:	The strategy would be for the Marine to manually turn off the device. Do not plan to have automatic software driven feature/ business rule.
Cabling:	Desired: E-textiles
Power input:	Connection of external power sources (e.g., solar panel, fuel cell) is desired.
Power output:	8 connections are desired
Identification:	It is desired to use an identification chip in power consuming devices and EUD Power Manager. Use of SMBus. The charging strategy is likely to vary by device. Expect to only charge batteries, but radios could be operated by a direct power source in maintenance or command post locations.

Data transfer type:	Desired: voice, C2, video, SMBus. Limited storage of C2 and video on EUD
Data protocol:	To be discussed: USB expected
Data exchange:	To be discussed: USB expected for tactical data. Power IAW STANAG

2.15.3 Components that Require Energy

Communication interface:	End User Device, dedicated battery
Radio:	Tactical radio, dedicated battery
GPS system:	GPS type not specified
Miscellaneous:	Image intensification systems, Thermal systems, Flashlight, Laser and Illumination Systems, Day Optics, Counter RCIED
Mission/billet specific items:	Shot detection system, cameras
The battery type in use will be:	BB2590, BB2847, AA, AAA, CR123, CR2032, C cell, 9 V, Harris AN/PRC-152 battery, Motorola AN/PRC-153 battery and EUD Battery

2.15.4 Experience, Recommendations and Further Development [46]

The strengths of the soldier system are: 'Addition of an identity chip to power consuming devices, use of standard interfaces and data protocols to control equipment state (off, on, standby, controllable power utilization states), and exchange tactical data through the same connection used for power.'

Area's that require improvement in the system are: 'Test and finalization of standard interfaces and data protocols to be used by manufacturers of power consuming devices.'

Recommendations for soldier system development: 'Multiple tests of varying system architectures to baseline capabilities and limitations among component variations. Legacy equipment will always be a component and need accommodation.'

The next steps in the development of the soldier system are: 'Power recharging, tactical data exchange and common connections available on mobility platforms transporting Marine rifle squads. Provide digital interoperability to the squad. Streaming video from a nearby UAV to infantry dismounted forces.'

2.15.5 Image Soldier System

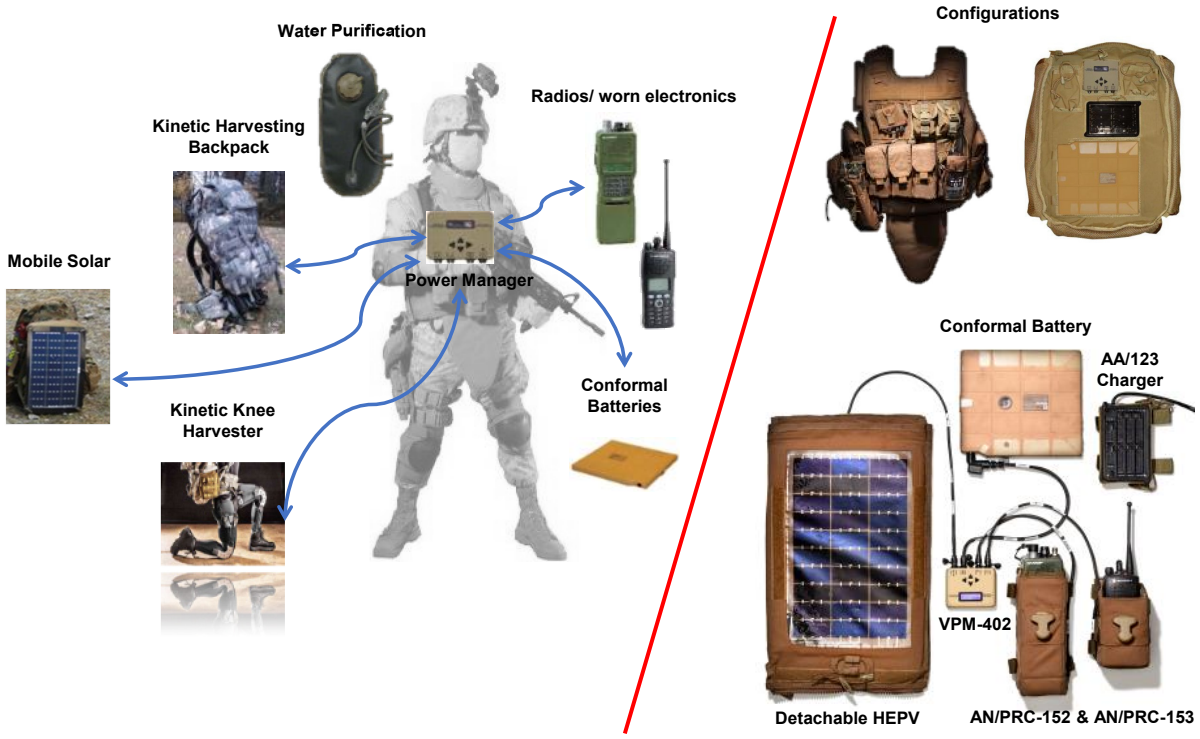

Figure 2-32: Joint Infantry Company-Prototype Soldier System [47].

2.16 UNDISCLOSED NATION

2.16.1 General Information

The soldier system described in this paragraph is for the Special Forces of an undisclosed nation. The energy use of the soldier system was measured during an exercise and shown in the graph below (Figure 2-33).

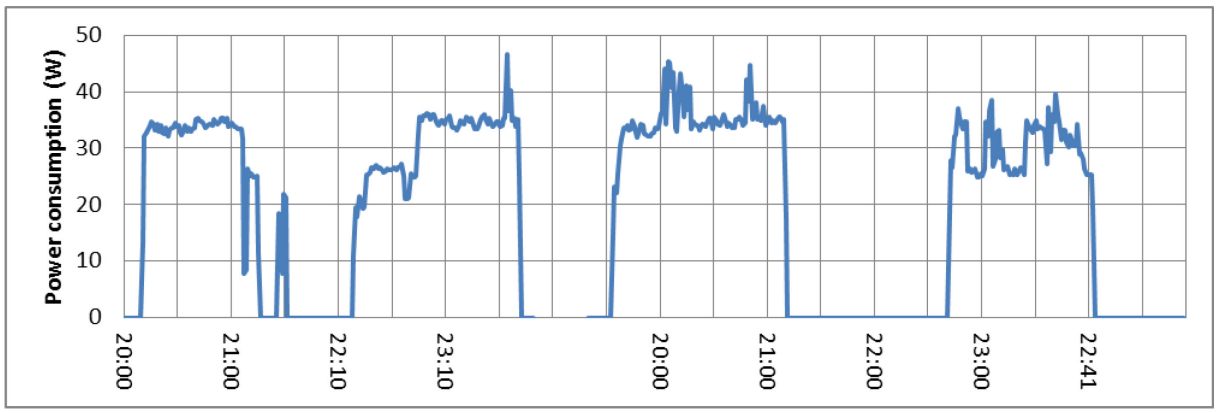

Figure 2-33: Power Consumption of the Soldier Power System During an Exercise [48].

Development stage: Field testing.

2.16.2 Power and Data Management [48]

Manufacturer:	Undisclosed
System:	Undisclosed
Power system:	Centralized
Power management system:	None
Power source:	No specific battery is required, Preferred battery is BA5390, but is testing the CWB 150 W for better comfort, and alternative stow away, i.e. under arms/side protection pouches
Energy status display:	The system is only capable of showing voltage. The user has a good idea of when it is time to replace battery.
Average/ peak power:	Average 37 W, peaks < 50 W (Note: computer gets very hot)
Runtime of 1 battery:	3 – 5 hours on CWB 150 Wh, 6 – 9 hours on BA5390 (depends on activity)
Hotswap of battery:	If two central batteries are used, hotswap is possible
Backup when power is lost:	None, system shuts down
Power management control:	No intelligent management control
Power management strategy:	None
Cabling:	Round cables
Power input:	No external connections possible
Power output:	4 output ports
Data transfer type:	Situational awareness between friendly soldiers and to aircraft, GPS positions, receive video from aircraft
Data protocol:	Unknown
Data exchange:	Export of stored files via cable to PC using USB

2.16.3 Components that Require Energy

Data control:	Dual-core computer (processing maps, situational awareness, positioning and video-streaming)
Communication interface:	Tablet, touch-screen to view maps, enemy and friendly positions to communicate with friends and aircraft
Radio:	Harris 152 radio (SA data and voice transmission), dedicated battery (10.4 V 4.8 Ah, part no. 12041-2100-02)
	UHF live-video-receiver (ROVER SIR)
GPS system:	GPS type not specified
Miscellaneous:	IO HUB

2.16.4 Experience, Recommendations and Further Development

The strengths of the soldier system are: 'Very easy to use, and it helps aircraft attacks to be very precise, at the same time sharing visuals to blue forces.'

Area's that require improvement in the system are: 'Get rid of all the cables. Smaller and less power consuming computer. Replace tablet with smartphone size. The system including vest, but excluding ballistic plates and spare batteries, weighs about 20 kg.'

Recommendations for soldier system development: 'Think on the weight of power sources together with the weight of the system. Meaning, that the system should be much more power-efficient, (in this system the components get very hot = waste of energy, so fewer spare batteries are needed.'

The next steps in the development of the soldier system are: Unknown.

Chapter 3 − SOLDIER SYSTEM: MANUFACTURERS

Additional to the dismounted soldier systems developed and funded by nations, there are also a number of commercial soldier systems available. In this Chapter dismounted soldier systems developed by contractors on the commercial market are described. Unfortunately, only one reply to the questionnaire by a commercial party was received. This questionnaire is filled in by BAE on the Broadsword soldier system. All other information presented in this chapter is retrieved from websites and could not be validated by any national organization.

3.1 BAE − BROADSWORD

3.1.1 General Information

The Broadsword™ Soldier System approach is to provide a totally configurable solution, user customisable for role and equipment fit. To achieve this only one component must be present in every Broadsword™ Soldier System: the Spine®. The spine provides E-textile power and data distribution garment insert with embedded power and data management [51].

Development stage: Commercially available.

3.1.2 Power and Data Management [49]

System:	SPIRIT
Power system:	Centralized
Power management system:	Samsung Galaxy Note 2
Power source:	Not specified
Energy status display:	Smartphone
Average/peak power:	Unknown (insufficiently fielded test) and highly configurable. Therefore, no standard equipment configuration on which this analysis can be based.
Runtime of 1 battery:	Not specified
Hotswap of battery:	Yes, possible
Backup when power is lost:	(1) Some equipment will retain their own batteries as backup should the central power source be depleted or when the device is detached from the system (2) Additional energy sources can be attached anywhere on the system to provide power should the central power source be depleted (3) Should the problem be a failure on the central power source interface to the system, the central power source can be reconnected to any other connection point on the system
Power management control:	Power and data manager: “the Spine”

Power management strategy:	There is an option to automatically shut down equipment when the battery level reaches certain points. These automated shutdowns can be overridden by the user at any time through the Spine® App.
Cabling:	Broadsword™ uses Intelligent Textiles Limited's E-textile technology. The e-textile is woven from conductive yarns to create a fabric power and data distribution network.
Power input/ output:	8 identical ports: each port has a USB and system power interface. Each port can accept power in or provide power out. The ITL system uses 8 Nemesis connectors.
Identification:	The direction of power flow is automatically set by the power and data manager by sensing what has been plugged in, there is no user input required. This totally flexible approach is made possible by converting all SMBus devices to USB either on the device or in a smart cable, removing the need for dedicated SMBus ports for power sources.
Data transfer type:	Geographical situational awareness data, images, video, text messages
Data protocol:	USB 2.0
Data exchange:	USB to Ethernet converter makes it possible to connect to the vehicle Ethernet bus

3.1.3 Components that Require Energy

Communication interface:	Samsung Galaxy Note 2 (or any Android smartphone), Samsung EB595675LU Battery
Radio:	Harris Soldier Radio (7800 SPR)
	Selex Soldier Radio (EZPRR and SSR+)
	MPU4, Persistent Systems Wave Relay Soldier Radio
Miscellaneous:	Helmet mounted system
	Flashlight
	Video Camera (Commercial webcam used for demonstrations)
	Stills Camera (Nikon commercial camera)

3.1.4 Experience, Recommendations and Further Development [49]

The strengths of the soldier system are:

- Reduces weight.
- Eliminates snagging and tangling.
- Improves comfort.
- Reduces heat signature.
- Enables quick equipment reconfiguration.
- Simplifies mission power.

- Streamlines logistics burden.
- Guarantees compatibility.
- Reduces cognitive burden.

Areas that require improvement in the system are:

- The system currently uses the ITT Cannon Nemesis connector. Other connectors are not becoming available that are specifically designed for fabric mounting and have improved mate / de-mate characteristics. We will be adopting one or more of these new connector solutions as they mature.

Recommendations for soldier system development:

- Broadsword™ was designed as a generic architecture to allow the simple integration and reconfiguration of soldier equipment, taking into account the MoD's Generic Soldier Architecture and the Department of Defence's Integrated Soldier Power and Data System specification.
- Soldier Systems designed around specific equipment fits have limited configurability, more difficult new equipment integration and inevitably shorter term obsolescence issues a generic architecture equivalent.

The next steps in the development of the soldier system are:

- Digitising the analogue audio on soldier radios to remove the need for analogue audio cabling causing weight and snag hazard disadvantages. This would also enable control and mixing of audio from multiple equipment sources.
- Integration of the torso power and data system with generic helmet power and data architecture.
- Integrating the power and data torso system with the weapon.
- Further developing the Q-Warrior augmented reality see through display.

3.1.5 Image Soldier System

Figure 3-1: Power Distribution Through the Soldier Vest [50].

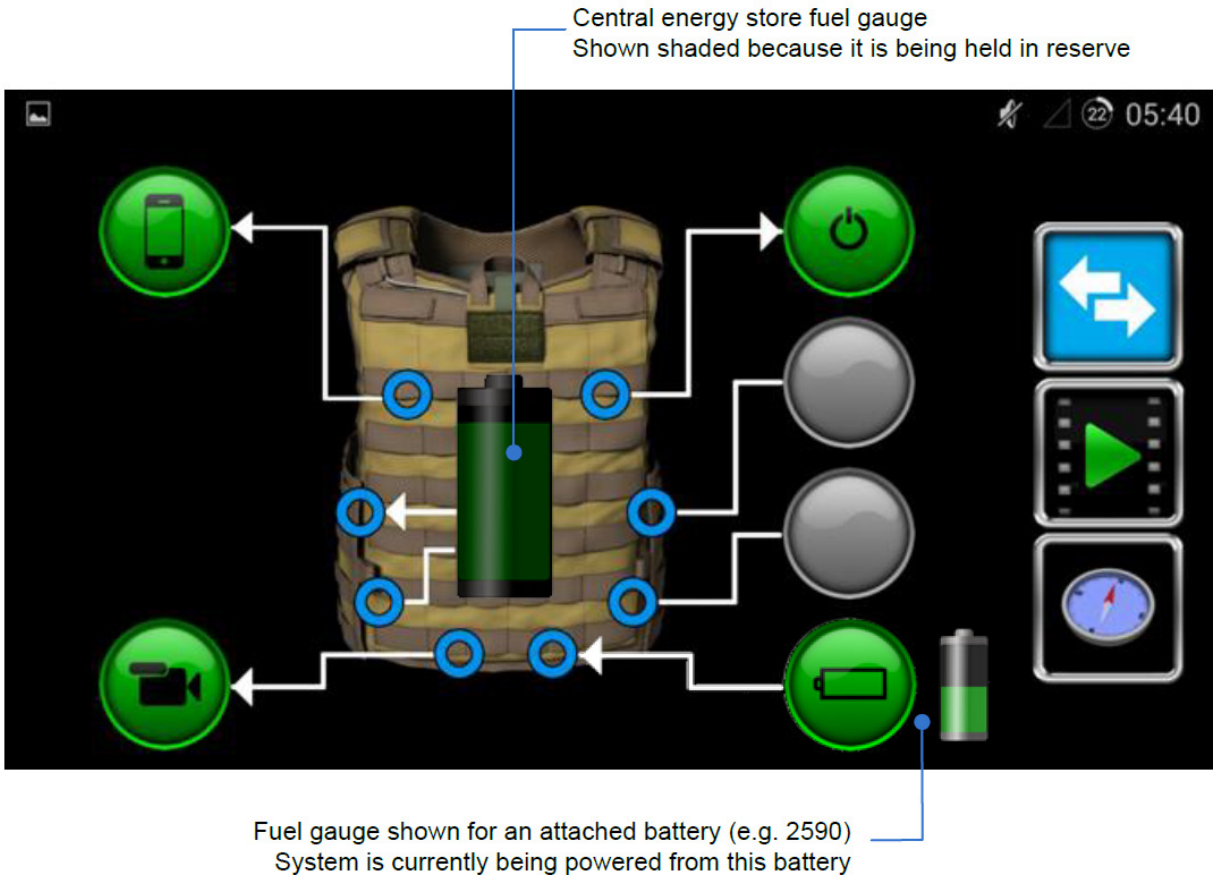

Figure 3-2: Smartphone End User Device can be Connected to the Spine® and Provides Status Information. The Spine® app provides the graphical user interface as shown above [49].

3.2 BLACK DIAMOND ADVANCED TECHNOLOGY – MODULAR TACTICAL SYSTEM

3.2.1 General Information

The Modular Tactical System is in use for the Australian LAND 17 programme. A detailed description of this soldier system can be found in Section 2.1.1.

Furthermore, BDA technology investigates the possibility to integrate a new, biometric handheld device, the BioTRAC [52]. BioTRAC is a ruggedized device for use on the field. It was designed on the platform of Black Diamond's ultra-rugged, second generation SwitchBack MT Computer, which features patented, reconfigurable architecture. The device enables rapid-low-cost development tailored to specific customers' needs according to BDA technology.

Development stage: Commercially available.

3.2.2 Image Soldier System

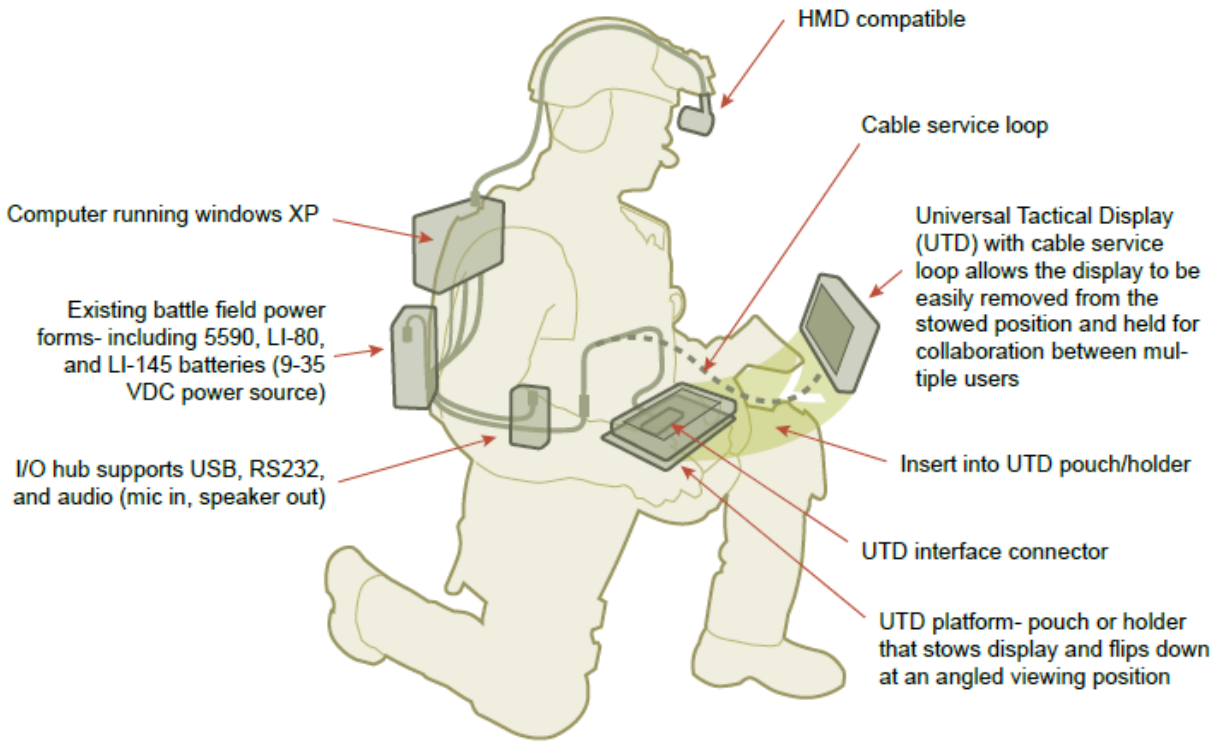

Figure 3-3: Modular Tactical System Approach [53].

3.3 ELBIT – DOMINATOR

3.3.1 General Information

The Dominator provides fighting forces with a tailored solution. The Elbit Dominator has a modular approach to the soldier system and allows the components to be tailored to a specific doctrine. Example of system variants are team leaders, forward observers, snipers, and riflemen. While the Dominator® IICS (Integrated Infantry Combat System) is suited for the command level, the lightweight Dominator-LD (Light Dismounted) is the Command and Control (C2) solution for the individual soldier level [54]. The Dominator-LD solution is based on operational experience accumulated by the Dominator IICS user community, including the Israel Defence Forces, the Australian Army, Armies in Latin America and Europe, and recently selected by the Finnish and the Dutch Army.

Development stage: Commercially available.

3.3.2 Image Soldier System

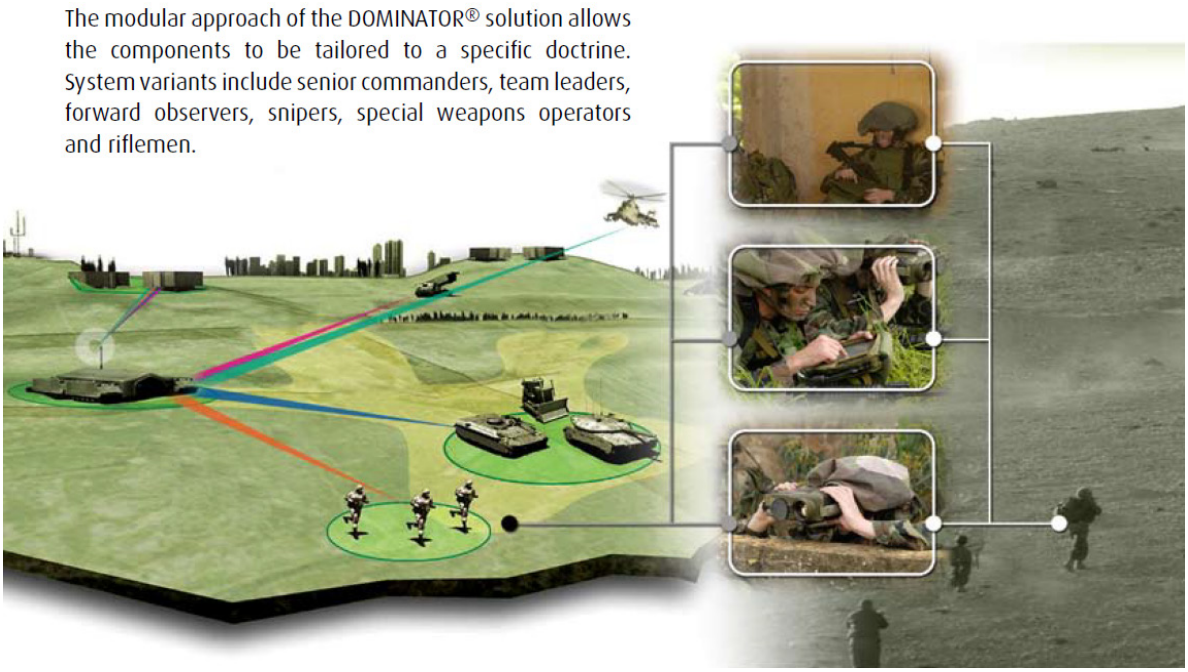

Figure 3-4: Integration of the Dominator Within Other Platform Systems [55].

3.4 EXELIS – INDIVIDUAL SOLDIER SYSTEM

3.4.1 General Information

The Exelis Individual Soldier System (ISS) provides shared intelligence on and off the battlefield with real-time two-way video and voice communications: Command to soldier, soldier to command and soldier to soldier.

The Exelis ISS provides capabilities in a flexible night-time situational awareness and intelligence sharing platform that enables real-time, two-way visual and voice communication between command and deployed forces, as well as soldier to soldier. The system capabilities are shared imagery and voice communications that ISS provides are powerful force multipliers on the battlefield, enabling tactical decision making in real-time [56].

Command and deployed forces can:

- Simultaneously view the same full motion video feed.
- Maintain voice and data links, even in structures like buildings, tunnels and ships.
- Access photos for identifying persons of interest in the field.
- Utilize UAV camera feeds to see beyond/over geographic and manmade barriers.
- Relay GPS to share current location, geographical targets, rendezvous points, etc.
- Record and store video recorded from soldier-POV for archive and future analysis.

Development stage: Commercially available.

3.4.2 Image Soldier System

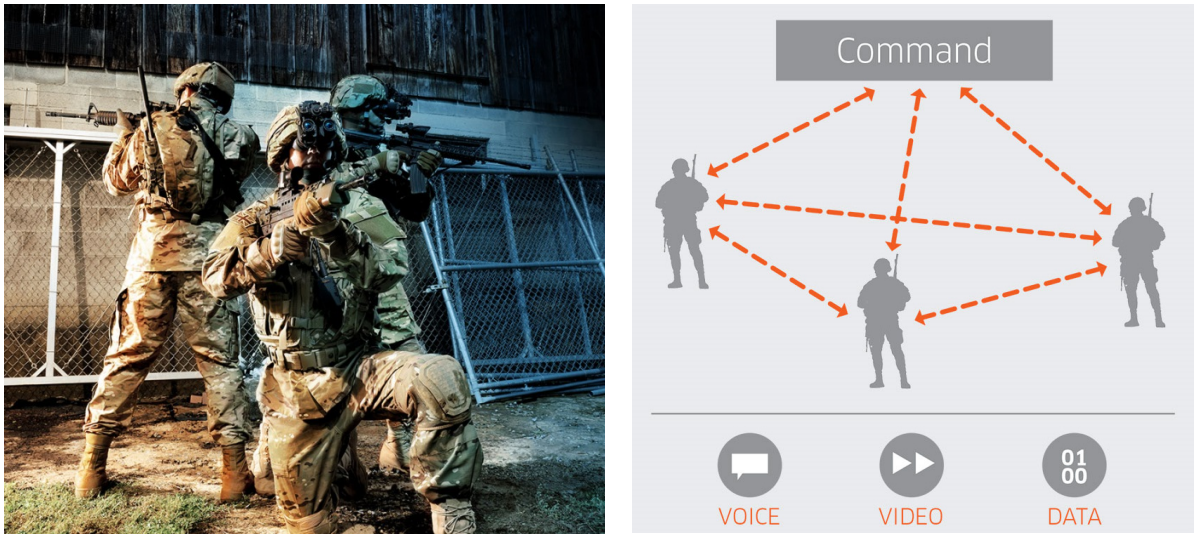

Figure 3-5: The Exelis Individual Soldier System [57].

3.5 HARRIS − FALCON FIGHTER SOLDIER SYSTEM

3.5.1 General Information

The FalconFighter® soldier system is a modular design that can be integrated with any component-agnostic product needed to meet the specific mission requirements [58]. Two typical configurations are the commander and the team member configuration.

The FalconFighter® soldier system is a modular system. Harris categorizes the elements of a FalconFighter® soldier system into four key modules: Sensors, C4, Power and Personal Area Network (PAN). Each of these modules contains key product groups from which Harris draws products to create an integrated soldier system. With this modular approach, and the use of products with open standards and interfaces, components can be integrated to meet current and future requirements. Harris offers the majority of the products, assuring a powerful and reliable soldier system.

The key system benefits of the FalconFighter® soldier system include [58]:

- Quick adaptation and integration of readily available communication, computation, optical and sensory devices into a scalable and modular system.
- Maximum exploitation of rapid developments in soldier technology through the use of components with open standards and interfaces.
- Elimination of large, long, expensive or protracted development or integration efforts as seen with traditional soldier programs.
- No redesign of the whole system when modules or individual components of the system are exchanged or upgraded over time to meet changing needs.

Development stage: Commercially available.

3.5.2 Image Soldier System

Figure 3-6: FalconFighter® Soldier System [58].

3.6 QINETIQ NORTH AMERICA – INTEGRATED WARRIOR SYSTEM

3.6.1 General Information [64], [65]

The Integrated Warrior System (IWS) is a power and data management system that integrates directly into the warfighter's vest. IWS is designed to enhance the situational awareness of a soldier and to extend mission endurance. IWS consists of three major components, as well as assorted accessories. The Power and Data Management HUB allows integrated power and data management for multiple peripherals. The End User Device (EUD) is a rugged smartphone/end-user device enclosure that protects the device from the elements, shields and enables operation in the field and combat environment. The Personal Area Network is the cabling that integrates with MOLLE, passing power and data to and from various peripherals. Examples of assorted accessories are a back-panel attachment (attaches directly using MOLLE to seamlessly integrate low profile cabling into the user's vest), wrist mount, chest mount and ruck sack.

The IWS system has evolved using a user-oriented design philosophy with the primary goal of providing an enhanced situational awareness and mission endurance capability to the warfighter while minimizing the associated Size, Weight And Power (SWaP) burden. The IWS enables data connectivity between the EUD (Android/PC) and mission peripherals for enhanced situational awareness on the battlefield. The IWS is a centralized soldier system. The central battery charges all connected computing and peripheral devices to extend mission endurance. In order to stimulate innovation, the IWS has non-proprietary, open-standard interfaces for compatibility with legacy and emerging electronics.

Development stage: Commercially available.

3.6.2 Image Soldier System

Figure 3-7: QinetiQ Integrated Warrior System [65].

3.7 SAAB AB – 9LAND SOLDIER

3.7.1 General Information

The 9Land Soldier system solution provides information support to dismounted individual soldiers and section commanders in combat situations. It is a low weight, easy to use and cost-efficient system including the fundamental capabilities for the selected users (only provide information on a need-to-know-basis) [59].

The system uses the same battery type for both sPad and radio, but separately powered to limit the logistical burden. Voice communication is the primary capability which should have its own, separate power source thus no risk be drained using the computer device and/or other components.

Development stage: Functional prototype developed [61].

3.7.2 Power and Data Management [60]

Country:	(Canada, system integrator is Rheinmetall Canada)
System:	9Land Soldier System

Power system:	Centralized, only the radio has its own battery
Power management system:	sPad
Power source:	6 – 16 VDC, 24 – 28 Wh (290 g)
Energy status display:	At the sPad display
Average/peak power:	No information
Runtime of 1 battery:	16 hrs
Hotswap of battery:	Yes, hotswap capability between two batteries
Backup when power is lost:	No information
Power management control:	No information
Power management strategy:	No information
Cabling:	Round cables
Power input:	6 – 16 VDC
Power output:	4 connections of 0.5 W USB, sPad < 2 W
Identification:	SMBus protocol
Data transfer type:	Situational awareness, reports, notifications, status reports, text messages, pictures and files
Data protocol:	SMBus communication and voltage measurement, USB 2.0, Ethernet
Data exchange:	Unknown

3.7.3 Components that Require Energy

Communication interface:	sPad (handheld computer device, 185 gr)
Radio:	Saab Personnel Role Radio (PRR), 3rd party or legacy radio
GPS system:	GPS type not specified
Miscellaneous:	Headset Invisio

3.7.4 Experience, Recommendations and Further Development

The strengths of the soldier system as claimed by SAAB are [61]: low weight, user friendly, and cost-efficient system including the fundamental capabilities for the selected users.

The next steps in the development of the soldier system: Future developments on the Saab 9Land soldier system will focus on improving and extending the sPad software to minimize the cognitive load and maybe upgrade the sPad hardware platform to take advantage of the latest technological developments in consumer electronics.

3.7.5 Image Soldier System

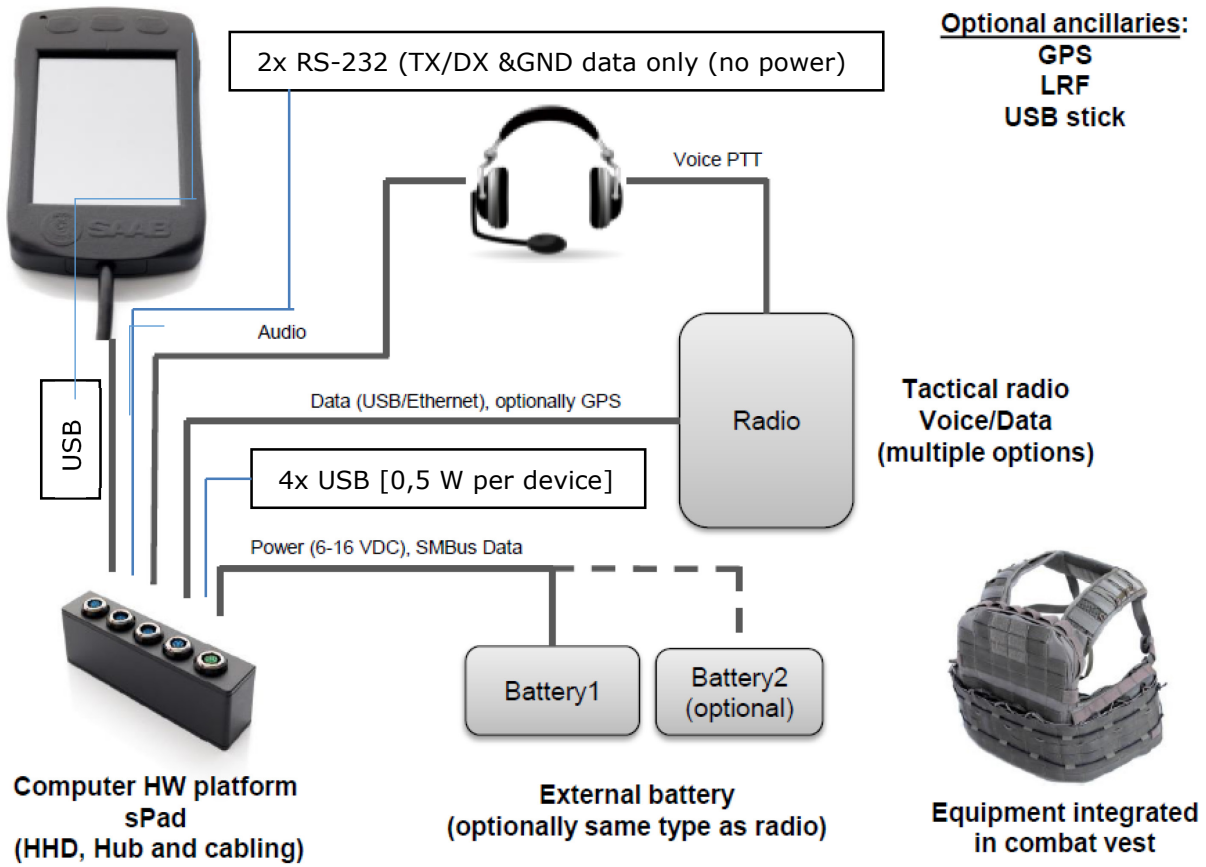

Figure 3-8: Schematic Drawing of the 9Land Soldier System [61].

3.8 SAGEM – C4ISTAR

3.8.1 General Information

Sagem is the Prime Contractor and Design Authority of the French Army Soldier System Fantassin à Équipements et Liaisons Intégrés (FÉLIN). Sagem develops, manufactures and supports the FÉLIN soldier system. In 2015, Sagem has been awarded a contract to upgrade the French Army's FÉLIN integrated soldier system to the FÉLIN V1.3 configuration. According to the 2014 to 2019 defence programme law, a total of 18,552 FÉLIN systems are scheduled to be handed over to the French Army [62].

Platoon and unit leaders will be outfitted with a combat vest optimised for use of the battle management system, SitComdé tactical terminal, during dismounted combat [63]. This C4I network consists of:

- MANET personal radio with secure voice and data and integrated GPS;
- Terminal for planning, mission monitoring and management of tactical situations with intuitive HMI; and
- Centralized energy management for missions up to 72 hours.

Development stage: Commercially available.

3.8.2 Image Soldier System

Figure 3-9: The Sagem C4ISTAR Solutions [63].

3.9 SELEX-ES – SOLDATO FUTURO

3.9.1 General Information [66], [67]

"Selex ES is the leader of the Italian programme Soldato Futuro and supplies a wide range of soldier radios worldwide. Based on this experience and involvement in other Future Soldier projects, Selex ES provides complete C4I-soldier-oriented solution available in today's marketplace. Its portfolio enhances the capabilities of the dismounted soldier in five areas:

1) Lethality or the ability to detect, recognize and attack targets.
2) The ability to use information and communication services to improve perception of the surrounding environment, to receive orders from the command level, and to provide the command level with operational information and reconnaissance data.
3) Survival capability: integration of bulletproof vests and Nuclear Biological Chemical (NBC) protection within the system.
4) Mobility in all weather conditions, indoor and outside, 24-hours-per-day, with night and assisted vision systems and equipment for autonomous navigation.

5) Sustainability: the ability to conduct autonomous operations for up to 24 hours, reflecting the total available quantity of power for the C4I electronic systems, ammunition, food, beverages and other consumables".

Development stage: Commercially available.

3.9.2 Power and Data Management [66]

Country:	Italy
System:	Soldato Futuro
Power system:	Centralized
Power management system:	Power distribution and control unit
Power source:	10.8 V DC battery (75 Wh)
Energy status display:	At the display and by LEDs
Average/ peak power:	Typically less than 10 W
Runtime of 1 battery:	Up to 12 hrs
Hotswap of battery:	Yes, WPC temporary power (30 s)
Backup when power is lost:	The individual batteries
Power management control:	PD&C distributes the energy to the devices and controls the consumption and status through a SMBus interface
Power management strategy:	A degradation strategy in order to preserve energy for essential services
Cabling:	Round cables
Power input:	12 – 24 V DC
Power output:	One for each component and one for auxiliary connection
Data transfer type:	Voice, situational awareness, video
Data protocol:	USB 1.1, USB 2.0 Ethernet 10/100 Base T
Data exchange:	Data exchange with vehicle is possible by Ethernet connection

3.9.3 Components that Require Energy

Data control:	Wearable computer
Communication interface:	Display
Radio:	Frontline Soldier Radio / Software Defined Radio (dedicated batt.)
GPS system:	Integrated with radio
Miscellaneous:	Headset: Head Mounted Optronic – dedicated battery
	Optronics: Optronic Target Designator – dedicated battery

Note: All the dedicated batteries are rechargeable by the central power distribution unit.

3.9.4 Experience, Recommendations and Further Development

Not specified.

3.9.5 Image Soldier System

Figure 3-10: The Soldato Futuro Soldier System [66].

Figure 3-11: Soldato Futuro System Overview [66].

3.10 EDA DEVELOPMENTS

The European Defence Agency (EDA) has taken initiative to stimulate the interoperability between soldier systems. Within this effort are currently two programmes running: EDA STASS and EDA CEDS, which are described in the sections below.

3.10.1 EDA − Standard Architecture for Soldier Systems

The European Defence Agency facilitates the development of a Standard Architecture for Soldier Systems (STASS). As a first step, a consortium consisting of Rheinmetall Defence Electronics, Larimart, Fraunhofer ICT and DNV GL was tasked to develop a standard architecture for the Soldier Power System (SPS). This study is completed in November 2016. Next year (2017) a new consortium will be tasked to look at the data aspect within the Standard Architecture for Soldier Systems.

The SPS will represent a comprehensive architecture for the power aspect of soldier systems. The purpose of this architecture is to promote interoperability and interchangeability for national dismounted soldier programs both at system and component level. The SPS will help to minimize physical, operational and cognitive burden of the soldier, stimulate continuous improvement of components and reduce costs.

The ambition of the soldier power architecture is to provide interfaces that comply with publicly available open standards. The possibility for modular components to connect to the system via these interfaces promotes third party competition and makes it possible to connect COTS to the system. This will promote innovation, diversity and reduce the costs of an integrated soldier power system.

The soldier power architecture will provide guidelines on which devices are relevant to connect to the SPS and characteristics on the External Power Sources (EPS) that can provide energy to the SPS. By focusing on the interface between the SPS and these devices, the soldier power architecture allows freedom for national choices within the core of the system, such as whether to connect the helmet with the vest using cable, wireless connection or no connection at all. Thus, the design of the core system of the SPS is a national concern, while the soldier power architecture focusses on the connection with devices and external power sources.

The SPS is a modular system starting with the core configuration for core devices and can be extended with connections to medium power group devices. A central rechargeable battery and the interface with power sources make it possible to organize the power consumption as flexible, lightweight and efficient as possible, without compromising on energy reliability.

The operational, system and technical architectural views on the soldier architecture are covered. The type, task and length of a mission, as defined in the operational view, determine the energy need of a squad. The system view presents the modular STASS tailored for the three operational scenarios (low, medium and high activity intensity). The technical view describes the interfaces requirements to achieve an integrated squad power system and minimize the burden for the warfighter.

3.10.2 EDA CEDS − Combat Equipment for Dismounted Soldier

The CEDS Feasibility Study Programme (CEDS-FSP) gathers the efforts of Austria, France, Germany, Finland, Portugal, Romania, Spain and Sweden to address four topics related to soldier systems, namely on observation, energy, human factors and survivability [68]. In this paragraph, the focus is on energy, which is relevant for soldier systems. More details on observation, human factors and survivability can be found in CEDS Feasibility Study Programme [68].

The objective of the CEDS-FSP is to further identify possibilities offered by existing and innovative technologies to later recommend the implementation on future soldier systems, or identify possible trends of research investment to improve system performance.

Results from this programme are intended to be included in upcoming programme of work for a complete soldier system. Minimum deliverable results will consist of a final report (including source code of any software developed) with recommendations for next steps of work, and a demonstrator if applicable.

3.10.2.1 Power Supply

Portable energy is essential for modern soldier systems to ensure the operational availability of electronic equipment in a wide range of climatic conditions, from arctic cold to hot deserts and the tropics [69]. The energy supply sub-system must therefore be capable of delivering, in all climate conditions and situations, at least the minimum amount of energy required for the mission. The main requirements for the energy supply system are:

- To provide system power (20 W average) for 72 h;
- To guarantee minimum energy requirements to the soldier systems under all climatic conditions;
- To include a computer-based power management system with soldier interface; and
- The use of energy harvesting devices.

The **design criteria** to be considered in the study are:

- Minimum weight and volume.
- Total energy generation to satisfy the mission of 72 h (as required by North Atlantic Treaty Organization scenarios – approx. 1800 Wh / 3 days).
- The average energy needs of the system (25 W).
- The peak energy need requested by the C4I equipment and weapon sensors (50 W).
- The constraints of the theatre of employment, and the availability of logistic support for charging and exchange of information, including mounted / dismounted mission stages.
- Influence on other soldier systems and mission requirements (e.g., signature).
- Power remaining indication.
- Flexibility and reconfigurable design (connectors, etc.) to allow use of e.g., primary and/or secondary batteries or other storage devices.
- Support for the soldier if it is necessary to operate in degraded mode.
- Logistics and maintenance of the energy system.
- Ergonomics and comfort, distribution of weights and volumes, interface with electrical and mechanical systems.

The CEDS-FSP will identify the possibilities and limitations of use of any technology, and draw the architecture of the system so they can be used, even in an alternative or mixed, depending on climatic conditions and operating environment.

Chapter 4 – TRENDS AND TRADE-OFFS

4.1 TRENDS

In Chapter 2 and Chapter 3 the modernization effort of dismounted soldier systems for nations and on the commercial market are described. Although the developers of the DSS might make different design choices, there are a number of general trends in the development and priorities. Annex B shows a Table where the results of the national modernization effort of the Dismounted Soldier Systems are summarized.

4.1.1 Integrated Soldier Systems

Future soldier systems are developing into integrated soldier system solutions. Most NATO countries have soldier system modernization programmes running or at least have plans. Some are still in the concept phase (Australia), a lot are testing prototypes (Canada, Netherlands, United Kingdom) and some are already fielded/ deployed (Australia, France, Germany). All of these soldier systems require continuous development and improvement.

Table 4-1: Overview of the Development Status of the Dismounted Soldier Systems.

	Concept Development and Experimentation	Procurement	Prototype Development and Testing	Field Trials	Fielding	Deployed
Countries	Australia (L125)		Australia (L75) Canada (ASAP) Finland (W2020) Netherlands (VOSS) UK (GSA) USA (JIC-P)	Spain (COMFUT) USA (SPIRIT) USA (TACP)	Italy (Sol Futuro) Norway (NORMANS) USA (NETT warr.)	Australia (L17) France (FÉLIN) Germany (IdZ)

4.1.2 Modular Soldier Systems

The general trend of DSS is towards modular systems in which the soldier only connects the equipment that he is planning to use on mission, in order to reduce the weight burden. The DSSs are tailored to the specific role of the soldier. Ideally, the architecture of a soldier system should allow for seamless upgrading from core capabilities to advanced configuration. However, as discussed in Section 4.2.4 this increases the logistic burden. As described in the Section 4.2.4, two main system design choices are possible, both have a modular approach:

1) A number of standard DSS configurations developed for specific roles.
2) A core soldier system configuration that can be extended step-by-step to a more advanced configuration by connecting and disconnecting the required devices (continuous modularity).

4.1.2.1 System Configurations

Most soldier systems, such as the German, Italian, Dutch and Norwegian soldier system, choose for the second approach and distinguish two or three configurations: A basic configuration for the individual soldier and an advanced configuration for the commander. Sometimes, a separate DSS is developed for a specialised role, primarily for UAV operators/receivers and/or forward air controllers (for example the DSS for JTAC/ JFO in the Land 17 programme of the Australian MoD).

Table 4-2: Overview of the System Configurations of the DSS from the Different Nations.

	DSS Developed for Specific Role	1 DSS Configuration for All	2 or 3 Standard DSS Configurations	Continuous Modularity
Countries	Australia (L17) Australia (L125) USA (TACP) USA (JIC-P)	Australia (L75) Finland (Warrior 2020) France (FÉLIN) Portugal Spain (COMFUT)	Germany (IdZ) Italy (Sol Futuro) Netherlands (VOSS) Norway (NORMANS)	Canada (ASAP) UK (GSA) USA (NETT warrior)

The basic system facilitates core capability, which always includes voice and positioning information, i.e. radio and GPS. The advanced system supports blue and red force tracking usually with a display interface to send/receive commands.

4.1.2.2 Continuous Technology Development

Another trend related to the modular soldier systems is the rapid technology development of components/ devices. A high-tech solution at the time of introduction might be outdated after a few years. Ideally, a DSS should allow for component-wise drop-in improvements. In practice this is often realized by replacement of subsystems. Modular soldier systems support the integration of up-to-date technology in soldier systems.

4.1.3 Platform Development

In order to support continuously improving technologies, soldier systems are more and more developing into open platform systems. There is a clear trend from buying complete systems from single suppliers (monolithic soldier system), towards a procurement process in which the MoD act as system integrator and have the industry to deliver the components. FÉLIN (Section 2.4) and IdZ (Section 2.5) are monolithic systems, designed with a specific set of components, while the newer Nett Warrior (Section 2.12) and GSA (Section 2.11) systems are open platforms where individual components can be connected to the soldier platform. These open platforms define the communication protocol and connections, so that industry can use this in the design of their products. The advantage of such an open communication system is that it supports the integration of continuously improving technologies and new components. The intermediate option between monolithic systems and open platform systems.

Table 4-3: The Type of DSS – Single Supplier (Monolithic) vs. MoD as System Integrator (Open Platform).

	Monolithic Systems	Industrial System Integrator	Open Platform
Countries	Australia (L17) France (FÉLIN) Germany (IdZ)	Australia (L75) Canada (ASAP) Finland (W2020) Italy (Sol Futuro) USA (TACP)	Netherlands (VOSS) UK (GSA) USA (NETT warrior)

4.1.3.1 COTS Integration

Open platform interfaces stimulate the integration of COTS. All nations show interest in open platform interfaces to stimulate the integration of COTS, but the UK, USA and the Netherlands are the only ones explicitly mentioning that open platform interfaces are part of their next generation soldier system. Related to the trend towards open platform development is the trend from unique computing and ruggedized display components towards application of COTS computing and display solutions such as (ruggedized) smartphones.

As a result of the rapid development of the smartphones with increased capability at lower power, nations investigate the possibility to integrate the smartphone into their soldier system. Since the commercial smartphone business has a budget of billions of dollars for research and development; advances in this area are expected to outperform the improvements made with respect to dedicated military systems. One of the major challenges with smartphones is the integration within military systems, which requires secure and ruggedized systems. Unfortunately, smartphones become less easy to adapt and to make adjustments in the firmware. It is therefore possible that there will be less use of smartphones in the future.

4.1.3.2 Vehicle Integration

Integration of the soldier system within an external platform can be very beneficial. Vehicle integration related to power is relatively easy to accomplish, integration with data is more problematic due to security concerns. The power connection with a vehicle can be used to charge the DSS battery/ batteries. This has the advantage that all batteries of the soldier are fully charged when they enter the battle field, instead of partly powered down batteries as result of the activities on the way to the mission. Almost all modernization efforts mention a possible power connection with the vehicle.

The vehicle integration on data level is somewhat more complex, as security issues arise. The advantage of an ‘umbilical cord’ connection to the vehicle is complete access to all information of this vehicle network. For the same reason, it is also very complex since a relatively simple soldier system needs to communicate with an advanced vehicle system. Newer systems such as GSA and VOSS are investigating the possibilities on vehicle integration. The interface protocol and security issue are most challenging when it comes to vehicle integration.

Table 4-4: External Platform Power – Power Connections, Data Connection or Both.

	Power Recharging Only	Data Exchange Only	Vehicle Power and Data Connection
Countries	Australia (L17) Australia (L75) Canada (ASAP) Finland (W2020)		Netherlands (VOSS) UK (GSA)

	Power Recharging Only	Data Exchange Only	Vehicle Power and Data Connection
Countries (cont'd)	France (FÉLIN) Germany (IdZ) Italy (Sol Futuro) USA (NETT warrior)		

4.1.4 Power

4.1.4.1 Weight and Energy Use of the Distribution System

There is not much information available on the weight and power draw of the power management system of the different soldier systems. The MWPD and similar prototypes use a few Watt. This is a high power use that consumes energy thereby requiring the soldier to carry extra batteries (weight). Canada asks the Rheinmetall system (using CAN bus) to limit the standby use to several mW. This seems challenging when compared with the current energy consumption of power management systems. For example, the BAE Broadsword system uses up to 1 W under full load mostly due to switching and transportation (all ports active, 5A throughput), which drops as less ports are active and less energy is transported.

A flexible power distribution comes with an energy burden. When not designed specifically for low power, the power electronics regulating flexible power distribution can consume several Watts.

4.1.4.2 Centralisation

There are three types of power architecture:

1) Distributed;
2) Centralised; and
3) Mixed.

A distributed power system uses an individual power source for each electronic device carried by a soldier (Portugal, Section 2.9). A centralised power system uses a central power source to provide power through a network to all electronic devices a soldier is carrying. The central power source may be a single source or a central combination of multiple power sources. The devices do not have their own power sources and must remain connected to the system to receive power at all times. A mixed architecture combines aspects of distributed and centralised architectures since they have a central power source connected to individual electronic devices, which may also have their own power sources for short periods of independent operation. These individual power sources are typically recharged by the central power source. All modernization efforts for the DSS have a mixed power architecture.

In general, soldier systems move from a completely decentralized system into a mixed system. Currently, there is no system that is completely centralized. There are two underlying reasons for not developing a completely centralized system. The first argumentation for a mixed soldier system is the importance of certain devices. For example, voice communication (by radio) is a core functionality that is never allowed to fail. In case another component completely drains the battery or the central power system fails, the soldier always needs to be able to establish communication.

A second reason is that in some situations the advantage of a centralised system does not outweigh the disadvantages, which are often a lot of cables. For example, connecting a small device such as a cell phone to a central power system would require a bulky cable. Small and mobile devices require low energy use and

would need a lot of cables to allow for the mobility. Also, high power devices (> 20 W average) keep their dedicated battery as centralisation does not achieve reduction of batteries in this case. Centralisation achieves battery weight reduction predominantly due to removing the need for spares per type.

Two dominant concepts exist to achieve reliability of power supply:

1) Two central batteries; or
2) A single central battery with hold-up batteries in the critical devices.

A DSS with a single central battery usually consist of a rechargeable battery that is top-charged by the system at a suitable moment in time for core functionalities such as voice and position. The English GSA solution requires for example a hold-up battery with 30 min of power for each of the components. Another way to guarantee power is to add a second rechargeable battery to the central system. The German IdZ solution integrates two central batteries as power supply for all components.

Table 4-5: Decentralized or Centralized Power Sources.

	Decentralized	**Hybrid, No Master/Slave**	**1 Central Power Source**	**2 Central Power Sources**
Countries	Portugal	Canada (ASAP)	Australia (L17) Italy (Sol Futuro) Netherlands (VOSS)	Australia (L75) Finland (W2020) France (FÉLIN) Germany (IdZ) UK (GSA) USA (NETT warrior)

Table 4-6: Hotswap Capability.

	Hotswap Capability	**Planned**
Countries	Australia (L17) Australia (L75) Canada (ASAP) Germany (IdZ) Italy (Sol Futuro) Netherlands (VOSS) UK (GSA) USA (NETT warrior) USA (SPIRIT)	Finland (W2020) USA (JIC-P)

4.1.4.3 Logistics

Another advantage of central batteries is the decrease of the logistics burden. The logistic footprint strongly decreases for the situation where only central batteries are recharged compared to a situation where a lot of smaller different batteries require charging. A single central power source battery reduces the logistical burden as only one type (less adapters/chargers) and lower quantities (less handling) need recharging.

4.1.5 Cabling and Connectors

Currently, power distribution in integrated soldier power systems is achieved with ruggedized cabling and connectors. However, this solution tends to be heavy and impede soldier motion. Hence other technologies, such as e-textiles, are being developed. The trend in cabling is the movement from round cables to flat cables and e-textiles with conductors and EM shielding integrated in vests and harness fabrics. In connectors, there is not such a clear trend. Current fielded systems all use barrel connectors, but nations have selected different connector (families) for their soldier systems (Figure 4-1). The move to e-textiles and integration of connection points into cloth warrants the development of flat connectors that integrate in textile. As data protocol, both USB (as more used in COTS end-items) and Ethernet (integration in vehicles / battlefield management systems) are used.

Table 4-7: Cabling Within Dismounted Soldier Systems.

	Round	**Flat**	**E-Textile**
Countries	Australia (L17) Australia (L75) Finland (W2020) Germany (IdZ) Italy (Sol Futuro) USA (NETT warrior)	Canada (ASAP)	UK (GSA) USA (SPIRIT) USA (JIC-P)

Figure 4-1: Examples of Different Connectors for DSS.

Table 4-8: Data Protocol Used in the DSS.

Countries	**USB**	**Ethernet**	**SMBus**	**CANbus**
Australia (L17)	USB	Ethernet		
Canada (ASAP)				CANbus
France (FÉLIN)	USB			
Germany (IdZ)		Ethernet	SMBus	
Italy (Sol Futuro)	USB	Ethernet		
Norway (NORMANS)	USB	Ethernet		
UK (GSA)	USB			

Countries	USB	Ethernet	SMBus	CANbus
USA (NETT warrior)	USB		SMBus	
USA (SPIRIT)	USB			
USA (TACP)	USB			
USA (JIC-P)	USB		SMBus	

4.1.6 User Experience

Even the best designed equipment will in practice differ in use from what was expected. For the first soldier systems that were very heavy, the acceptance by the users was low. Examples are the American Land Warrior and Australian BMS-D. The user experience did not correspond to the expected advantages. Two aspects have strongly increased the acceptance of the soldier systems.

First of all, there is a closer collaboration with the soldiers during the development of the soldier systems. Companies offering the soldier systems, for example Elbit and BAE, emphasise on the fact that the feedback of the soldiers is important in the development of their systems. Also, there is more emphasis on the introduction of a new soldier system. Instead of 'dropping' the system with the soldier in a war area, nowadays training programs are introduced in order to explain the soldier system how to optimally make use of the advantages of their soldier system. This approach increased the acceptance of the soldier to use the system.

4.1.6.1 Graceful Degradation

Most of the NATO countries consider graceful degradation of the power system, but are not sure how to solve this issue. Gradual degradation can be implemented by pre-programmed user profiles, which automatically shut-down certain devices depending on the energy content of the central battery or via user messages to inform the soldier. The disadvantage of pre-programmed user profiles is that the soldier is not in control. With user messages to inform the soldier, the soldier is in control at the expense of an increased cognitive burden. Also, it is important to realize that pop-up messages should never appear on critical moments.

4.1.7 Interoperability

Most countries agree that interoperability would be an interesting option. For example, within the EDA-CEDS study Austria, France, Germany, Finland, Portugal, Romania, Spain and Sweden, investigate amongst others the energy aspect of the soldier systems. This interest is more and more taking into account the increasing number of combined missions. It is however, not considered to be a core capability. In other words, it is not a priority but considered to be nice to have.

4.2 TRADE-OFFS

The dismounted soldier systems exist in a variety of different lay-outs, which are described in the previous Section 4.1. Since there is not one best solution, a trade-off between the advantages of different design choices has to be made. This chapter describes the most important trade-offs for the design of a DSS.

4.2.1 Functionality versus Weight

Increased functionality increases the employability and opportunities of the soldier. However, increased functionality increases the power demand of a DSS as well, which correlates to an increased weight burden of the DSS. This increased weight burden limits the mobility and effectivity of the soldier (Figure 4-2). Next to the weight burden, there is also a cognitive burden: a high degree of information availability for the soldier decreases the speed at which a decision can be made. A quick response is of vital importance in combat situations.

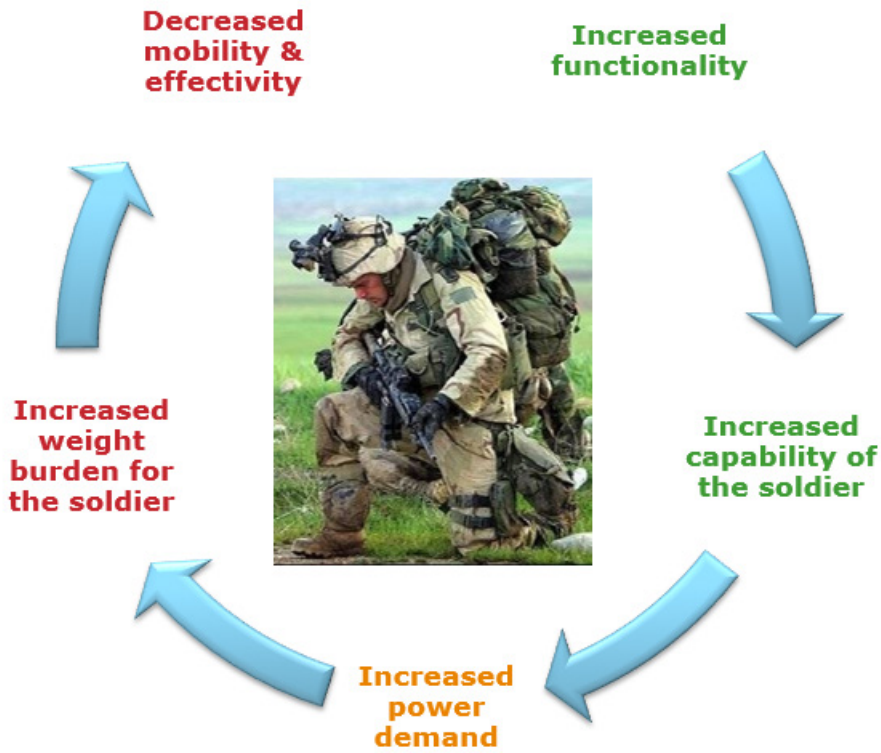

Figure 4-2: Trade-Off Between Functionality and Weight Burden.

The advantages of increased functionality need to outweigh the disadvantages of increased physical and cognitive burden. Here, the important question is: At what point does the added burden outweigh the capability increase? The advice is that when extra functionalities are added, the extra risks as result of the additional weight need to be considered. A possible solution is to use electronics that increase the capability with minimal increase of the power consumption.

The balance between functionality and weight was clearly an issue of the first integrated soldier systems. For example, the Australian soldier user community did not accept and use the BMS-D, because the additional capabilities were heavy and did not outweigh the extra possibilities.

4.2.2 Centralized versus Decentralized Energy Source

A centralized DSS employs a single battery energy source. The advantage is that the energy can be shared between components. This enhances the flexibility and efficiency of energy use; a soldier needs to bring fewer (spare) batteries which results in a lower total weight. Unfortunately, a centralized DSS creates an important dependency of one single component. In a situation that the central battery or its connection fails, the soldier can no longer operate any of his electrical equipment.

In a decentralized power and data DSS, each component has a dedicated battery. This battery supplies energy only to the device that it is connected to. Therefore, more spare batteries are necessary, which increases the weight burden. The advantage of a decentralised system is that when a single component fails, the rest of the system is still operational. A decentralized system is very robust and reliable.

There is a third version – a mix of the previous two solutions. This is where there is a central power source that top charges the individual batteries. This offers the highest weight burden, but also the longest mission times. The number of spares is reduced to only the central power source.

The choice between a centralized, decentralized, or a mixed system is the trade-off between weight and robustness. The reliability of a centralized power system can be increased by adding a second centralized power source (and weight). The centralized system offers the lowest weight, and shortest mission time. The hybrid system offers the highest weight and longest mission time, with the decentralized falling somewhere in the middle.

4.2.3 Centralized versus Decentralized Power Management

Power management includes power conditioning (voltage level, power quality/stability), power source management, for example the automated start-up of a fuel cell, and power consumption management, such as disabling ports and informing the user on low power situations.

The functionality for power management can be centralized or decentralized. A central power management system (where everything is integrated in a power manager) allows for separately updating the capability over the lifetime of the DSS. The disadvantage is that the soldier is required to use the complete power management module, which creates a dependency on one single component. Also, a separate power management module adds weight and volume to the system, while also affecting the power performance of the overall system. Every power management system uses power and therefore parasitic drains the central energy supply.

A decentralized power management, where the power management functionality is built within each device, makes the system modular. It limits the required size, weight and power consumption to only the DSS configurations and components that require it. Unfortunately, a decentralized power management solution is not always possible; some sort of core power and information management may be required by the DSS.

4.2.4 Modular Tailored System versus 'One-For-All'

A modular system, which is tailored to a specific role (team member/leader) or specific function has the advantage that no unnecessary equipment and thus weight has to be carried by every soldier. Unfortunately, maintaining several configurations increases the logistic burden and adds costs for adding interfaces/ connectors. Also, role transfer becomes more difficult when tailored modular systems are being used.

A single configuration for all soldiers allows for seamless role hand-over and limits diversification in training. The disadvantage is that this 'one-for-all' solution brings unnecessary burden in weight, volume and power draw for roles that do not require all available capabilities.

The choice between one or more DSS configurations is the trade-off between on one hand weight and volume and on the other hand the logistic burden and costs.

4.3 NEXT STEP IN DEVELOPMENT

Future soldier systems will be continuously in development and improving. The issue of security will become more important and a point of attention in the development of future systems, especially with the

integration of more and more COTS. Several countries, mainly the smaller countries such as Austria, announced to address the issue of interoperability considering the regularly common collaborations in NATO missions.

Chapter 5 – CONCLUSIONS

Future soldier systems are being developed into integrated soldier system solutions. Currently, the weight burden of a soldier is one of the most important issues. The weight of batteries (power) contributes to a significant part of the total weight to be carried. This is of increasing importance due to the introduction of more advanced electronic equipment that is having a higher energy demand. Increased energy use also impacts the logistic burden.

The next generation dismounted soldier systems exist in a number of different lay-outs. No single optimal solution is available, there is always a trade-off between different design choices. The following trade-offs are discussed:

- The advantages of increased functionality need to outweigh the disadvantages of increased physical and cognitive burden.
- The choice between a centralized and decentralized system is the trade-off between weight and flexibility and robustness and reliability.
- The advantage of tailored DSS solutions is that it limits the size, weight and power consumption, because everything the soldier carries is relevant for his/ her mission. The advantage of a 'one-for-all' DSS system is that it simplifies logistics.
- The choice between one or more DSS configurations is the trade-off between on one hand weight and volume and on the other hand the logistic burden and costs.

Nevertheless, there are a number of general trends in the development and priorities for the dismounted soldier systems:

- Integrated soldier systems insights are maturing, moving to second generation concepts.
- Dismounted soldier systems become modular with a tailored DSS solution for the individual soldier. Typically, two or three system configurations exist.
- Open platform development, moving away from single suppliers, where the MoD is the system integrator. Open platforms support the integration of COTS.
- Integration with (vehicle) platforms for power transfer. Data exchange is difficult as result of security protocols.
- DSS move from a completely decentralized system into centralized power source concepts using one central battery with device specific hold-up batteries or two central batteries.
- Move from round cables and barrel connectors to flat connectors and e-textiles.
- Human factors are vital for soldier acceptance. Training programs are introduced in order to explain the DSS and how to optimally make use of the advantages of their soldier system.
- NATO interoperability is nice to have.

The next step in the development of soldier systems, apart from continuously improving the soldier system, is a general focus on the issue of security and the interoperability of soldier systems with other allied forces systems.

Chapter 6 − REFERENCES

[1] Australia, Questionnaire LAND17 (27 July 2015).

[2] Australia, Questionnaire LAND75 (28 July 2015).

[3] Australia, *DMO delivers enhanced soldier protection*. Online available at www.defence.gov.au/dmo/NewsMedia/DMOBulletin/DMOdeliversEnhancedSoldierProtection (accessed 1 February 2016).

[4] Australia, *project description LAND 17 Artillery Replacement*. Online available at http://www.defence.gov.au/casg/EquippingDefence/LAND17PH1A-Artillery (accessed 1 February 2016).

[5] Australia, *website Black Diamond Advanced Technology*, www.bdatech.com/product/mts/ (accessed 1 February 2016).

[6] Australia, *Advancements in Wearable Computing Solutions Aid JTAC Missions*, Black Diamond Advanced Technology (2011).

[7] Australia, *project description LAND 75 Battle Management System*. Online available at www.defence.gov.au/casg/EquippingDefence/LAND-75-ph3.4-BMS (accessed 1 February 2016).

[8] Australia, *Modernised Australian Combatant through Soldier Combat Systems Programs*, presentation slides for Soldier Systems Berlin, Lt Col Buldo (March 2014).

[9] Australia, *Australia Turns to Elbit for its Battle Management System*. Online available at http://www.defenseindustrydaily.com/australia-turns-to-elbit-for-its-battle-management-system-06247/ (accessed 13 October 2015).

[10] Australia, *website Silynx – C4OPS modular headset system.* Online available at https://www.silynxcom.com/wp-content/uploads/2014/09/2013_10_C4OPS_Brochure_sm.pdf (accessed 1 February 2016).

[11] Austria, *Update – National Soldier Modernisation Programme*, ppt, NATO Belgium (spring 2015).

[12] Darryl Kewin, Integrated Soldier Combat Systems Solutions for the Australian Digger, Diggerworks (15 September 2011).

[13] Canada, *Rheinmetall to supply Canada's armed forces with medium-range radar and integrated soldier system*. Online available at www.rheinmetall.ca/en/rheinmetall_canada/publicrelations_1/news_1/2015_07_28_contract_mmr_iss.php (accessed 1 February 2016).

[14] Canada, *ISSP awarded to Rheinmetall Canada.* Online available at http://globenewswire.com/news-release/2015/07/28/755583/0/en/Canadian-ISS-Program-awarded-to-Rheinmetall-Canada-in-partnership-with-INVISIO.html (accessed 1 February 2016).

[15] Canada, *Advanced Soldier Adaptive Power*, ppt, NATO LCGDSS Power Team of Experts & STO SET 206 Meeting (August 2015).

[16] Canada, *Update – National Soldier Modernisation Programme CANADA*, ppt, LCG DSS Brussels (March 2015).

[17] Finland, Questionnaire Warrior 2020.

[18] Finland, *Electric Power Management System prototype for dismounted soldier,* Dr. Paavo Raerinne, private communication (2015).

[19] France, *Livraison des premiers systèmes FELIN*, http://www.defense.gouv.fr/terre/actu-terre/archives/livraison-des-premiers-systemes-felin, 2010 (accessed 1 February 2016).

[20] France, *Félin – Future Infantry Soldier System*, Army Technology, http://www.army-technology.com/projects/felin/ (accessed 1 February 2016).

[21] France, *FELIN*, LCL Philippe Seigneur French Army Staff, ppt Soldier Systems Berlin (March 2014).

[22] Germany, *Infanterist der Zukunft - IdZ-ES Lessons learned and Update*, ppt Future Forces Conference, Prague (October 2014).

[23] Germany, *Infanterist der Zukunft – Erweitertes System*, Maj Sinzig, ppt Soldier Systems Berlin (March 2014).

[24] Germany, *Infanterist der Zukunft - Erweitertes System (IdZ -ES) Einführung*, Rheinmetall Defence (April 2010).

[25] Germany, Dr Rippert, private communication (13 August 2015).

[26] Italy, *Italian Dismounted Soldier System 'Soldato Futuro' programme update*, LCG DSS Brussels (March 2015).

[27] Italy, *Soldato Futuro Future Soldier System*, Army Technology, http://www.armytechnology.com/projects/italiansoldiersystem/ (accessed 1 February 2016).

[28] The Netherlands, *D-brief over het project Verbeterd Operationeel Soldaat Systeem (VOSS)*, https://www.rijksoverheid.nl/documenten/kamerstukken/2015/06/04/kamerbrief-over-d-brief-over-het-project-verbeterd-operationeel-soldaat-systeem-voss, 4 Jun 2015 (accessed 1 February 2016).

[29] The Netherlands, *Defensie bestelt Smart Vesten,* https://www.defensie.nl/actueel/nieuws/2015/07/02/defensie-bestelt-smart-vesten, 2 Jul 2015 (accessed 1 February 2016).

[30] The Netherlands, private communication (October 2015).

[31] Norway, *Normans Soldier System,* https://www.thalesgroup.com/sites/default/files/asset/document/thales-normans.pdf (accessed 1 February 2016).

[32] Portugal, Questionnaire (28 October 2015).

[33] Spain, *ComFut: Options to Address*, SoldierMod Vol 06 winter/spring 2011.

[34] Spain, http://defence.pk/threads/global-future-soldier-programs.279003/, (accessed 1 February 2016).

[35] UK, DefStan 23-12, Generic Soldier Architecture, http://standards.globalspec.com/std/1607350/moduk-def-stan-23-12 (accessed 1 February 2016).

[36] Private communication (October 2015).

[37] USA, *Land Warrior Integrated Soldier System,* http://www.armytechnology.com/projects/land_warrior/ (accessed 1 February 2016).

[38] USA, *Nett Warrior: The Legacy of Integrated Systems,* http://www.protonex.com/blog/nett-warrior-the-legacy-of-integrated-systems/ (accessed 1 February 2016).

[39] USA, *Secure wins Integrated soldier power and data distribution system hub and DAGR adapter contract*, http://www.securecomm.com/press-release/secure-wins-integrated-soldier-power-data-distribution-system-hub-dagr-adapter-contract/ 14 Nov 2013 (accessed 1 February 2016).

[40] USA, Questionnaire Nett Warrio (28 July 2015).

[41] USA, *BAE/ITL man worn power and data vest*, Raman Tandon, Bundeswehr (02 March 2015).

[42] USA, BAE-Systems presentation (May 2014).

[43] USA, *Special Operations Equipment Plugs Into the Digital Revolution*, http://www.nationaldefensemagazine.org/archive/2016/january/Pages/SpecialOperationsEquipmentPlugsIntotheDigitalRevolution.aspx, Jan 2016, (accessed 1 February 2016).

[44] USA, TACP-Modernization, http://soldiersystems.net/2014/09/30/tacp-modernization/, Soldier Systems, 30 Sept 2014 (accessed 1 February 2016).

[45] USA, Questionnaire TACP (21 April 2015).

[46] USA, Questionnaire MERS (22 February 2016).

[47] USA, *Joint Infantry Company Prototype*, Captain Anthony Ripley, ppt, conference (26 November 2015).

[48] Undisclosed nation, Questionnaire (July 2015).

[49] BAE, Questionnaire Broadsword (May 2015).

[50] BAE, *BAE Systems' Broadsword To Power The High Tech Warrior*, Logan, Popular Airsoft, http://www.popularairsoft.com/bae-systems-broadsword-power-high-tech-warrior, 21 Oct 2014 (accessed 1 February 2016).

[51] BAE, *BAE's Broadsword Looks To Lighten Load*, Angus Batey, AWIN First, http://aviationweek.com/farnborough-2014/baes-broadsword-looks-lighten-load, 14 Jul 2014 (accessed 1 February 2016).

[52] Black Diamond Advance Technology, *Black Diamond releases new multi-biometric handheld device*, Government Security News magazine, 17 Jun 2010 (accessed 1 February 2016).

[53] Black Diamond Advance Technology, *Advancements in Wearable Computing Solutions Aid JTAC Missions*, whitepaper (accessed 1 February 2016).

[54] Elbit, *Elbit Systems unveils newest addition to Dominator IICS family*, Digital battlespace, https://www.shephardmedia.com/news/digital-battlespace/elbit-systems-unveils-newest-addition-dominator-ii/ 17 Oct 2012 (accessed 1 February 2016).

[55] Elbit, *Dominator® Family of compact, lightweight, all-in-one C2 solutions for dismounted infantry and Special Forces*, http://elbitsystems.com/Elbitmain/files/Dominator_family.pdf, 2011, (accessed 1 February 2016).

[56] Exelis, *Individual Soldier System (ISS)*, http://www.exelisinc.com/solutions/individual-soldier-system/Pages/ (accessed 18 March 2015).

[57] Exelis, *Individual Soldier System (ISS)*, folder downloaded from website (2014).

[58] Harris, *Harris FalconFighter® Soldier Systems Brochure*, downloaded from website (2015).

[59] SAAB, *9LAND BMS,* http://saab.com/globalassets/commercial/land/c4i/tactical-c2-systems/9land-c2/9landbms_final_webb.pdf (accessed 1 February 2016).

[60] SAAB, *9LAND SOLDIER sPAD SMALL ENOUGH FOR THE CHALLENGE*, folder (24 October 2014).

[61] SAAB, *9LAND Soldier System Concept Description*, Johan Tofte, ppt, 2014-10-22 (unclassified).

[62] Sagem, *Sagem wins French Army FELIN soldier system upgrade contract*, http://www.army-technology.com/news/newssagem-wins-french-army-felin-soldier-system-upgrade-contract-4548969, Army Technology, 8 Apr 2015 (accessed 1 February 2016).

[63] Sagem, *Sagem, your soldier modernization partner*, folder downloaded from website (August 2015).

[64] QinetiQ, *QinetiQ North America Launches Integrated Warrior System™ at Soldier Technology Show*, VA Reston, PRWeb, http://www.prweb.com/releases/2013/1/prweb10373350.htm, 29 January 2013 (accessed 20 March 2015).

[65] QinetiQ, *Integrated Warrior SystemTM (IWS) - Providing Command and Control, Situational Awareness and Lethality,* folder downloaded from www.QinetiQ-NA.com (2015).

[66] Larimart, Questionnaire Soldato Futuro (31 July 2015).

[67] Selex ES, *Soldier Systems,* folder downloaded from http://www.leonardocompany.com/en/-/soldier-systems (accessed April 2016).

[68] European Defence Agency, Call for proposals: Combat Equipment for Dismounted Soldier Feasibility Study Programme, 14 January 2013, http://eda.europa.eu/procurement-gateway/opportunites/eda-procurement/procurement-view/b-1143-rt-gp---combat-equipment-for-dismounted-soldier-feasibility-study-programme-(ceds-fsp).

[69] AECTP-230 leaflet 2311/1 Climatic categories and their geographical location, p. 137 (May 2009).

Annex A − ENERGY SYSTEM ASSESSMENT QUESTIONNAIRE

STO-SET-206 − Dismounted Soldier Systems

The NATO's Sensors and Electronics Technology Task Group on "Energy Generation for Manwearable/ Manportable Applications and Remote Sensors" (SET-206) is conducting a research task to do an assessment of the system architecture and energy/data distribution systems of dismounted soldier systems, both currently in use and planned for the future. The goal of this effort is to identify trends and trade-offs in the solutions offered and being procured**.** So as to ensure that we have the most accurate and up to date information, would you be kind enough to fill in the questionnaire below to help us gather the relevant details of your existing system and intent for any future system?

The SET-206 work will inform NATO Land Capability Group's − Dismounted Soldier Systems Working Group on current and future trends related to dismounted soldier technologies. We will respect any proprietary information that you might provide us. The end-report will be NATO Unclassified so as to make it available in the public domain.

Should you have any questions, please feel free to contact me via e-mail at marc.d.gietter.civ@mail.mil.

On behalf of the SET-206 Task Group, I thank you for your time.

Marc. D. Gietter
Chairman of SET-206
Command, Power and Integration Directorate
Communications-Electronics Research, Development and Engineering Center
US ARMY

To help you − we are defining the soldier system as the combination of items that the soldier either wears on his body, is head born, has fitted to his weapon system, or carries in his rucksack to support the assigned mission.

A.1 SYSTEM DESCRIPTION

1) Please provide a list of the components in your soldier system that require electric power, with a brief description of the function (i.e. tactical radio, GPS, etc.). If possible please provide type numbers, and as much technical data as possible (i.e. datasheets and/or technical manuals) on the system components:

   a) Two PRC-148 or PRC-152 Tactical Radios.

   b) PLRF-15C Laser Range Finder.

   c) PSN-13A DAGR GPS.

   d) Night Vision Goggles, PVS-14, PVS-31.

   e) IR Strobe, MS-2000 is common but no set standard.

   f) IZLID 1000P, IR Pointer.

   g) Battlefield Airman Operational Control System (OCS) – Not fielded yet, currently in Source Selection.

2) Which of the components listed above have a dedicated battery (to exclude memory hold batteries)? Please state which battery type(s)/part number(s):

a) PRC-148 or PRC-152 Tactical Radios – OEM rechargeable battery or multiple CR-123s with adapter.

b) PLRF-15C Laser Range Finder – CR-123s.

c) PSN-13A DAGR GPS – AAs.

d) Night Vision Goggles, PVS-14, PVS-31 – AAs.

e) IR Strobe, MS-2000 is common but no set standard – AAs for MS-2000.

f) IZLID 1000P, IR Pointer – AAs.

g) OCS – BA-5590 or any 90-series battery (Per the System Requirements Document).

3) Does your soldier system have a centralized power source? If yes, which of the components listed above are connected to it? What is the power source and part number? (If part numbers are not appropriate could you provide voltage, capacity, size and weight details?):

a) The OCS will have a centralized 90 series battery but currently all items are powered individually.

4) If you have a centralized power source, are the interconnections round cables, flat cables or e-textiles?:

a) OCS still in source selection so it is undefined at this time.

A.2 POWER MANAGEMENT

5) Does the soldier system have some form of centralized power management? If the answer is yes please answer the following:

a) OCS still in source selection so it is undefined at this time.

b) Where is the power management functionality located in the system? A separate device? Built into another component? Please describe.

c) Does the soldier system present energy status to the soldier? If yes, how?

d) Is there a power management strategy in your soldier system to shut down some connected devices at low battery energy levels to preserve core capabilities?

6) Can you connect an external power source (e.g. solar panel, fuel cell, kinetic generator, vehicle) to the system? If yes, how does the soldier system identify the type of power generator connected?

7) If there is the ability to connect an external power source, can the external source only charge the batteries, only power the system or do both simultaneously?

8) How many power output ports does your soldier system have?

9) Can you hotswap a central battery?

10) What is the backup in case you lose your central power source?

A.3 DATA

11) Does your soldier system have the capability to process data between components (e.g. store and transmit a thermal image, input and transmit a threat on a map, etc.)? If the answer is yes, please answer the following:

a) What kind of data do you transfer through your soldier system (e.g. voice, situational awareness, video)?:

i) Receive Full Motion Video from ISR/CAS aircraft.

ii) TX and RV multiple MIL-STD digital messaging protocols.

b) What is the data protocol used in your soldier system between components (e.g. USB, Ethernet, etc.)? Which subtype of data transfer is used (e.g. USB 1.0. 2.0 100Base T Ethernet, 1 Gb/s Ethernet etc.):

i) OCS still in source selection so it is undefined at this time.

ii) Peripheral devices use different protocols:

1) DAGR = Serial.

2) PLRF-15C = Serial or USB.

c) Can your soldier system be connected to a vehicle to exchange data? If yes in what protocol (e.g. USB, Ethernet)?:

i) Not planned for OCS as of now.

A.4 EXPERIENCE

12) What is the typical runtime of your soldier system on one battery / one set of batteries?:

a) OCS is undefined / Peripheral device run time varies based on use.

13) If available, please provide power consumption for the components listed in question 1 above.

14) If available, please provide an estimate of average and peak power for the total soldier system and provide details of any assumption underlying this (e.g. radio transmit ratios).

15) If available, please provide power profile measurements on the total system and/or components during an exercise/operation.

A.5 MISCELLANEOUS

16) If available, please provide images of the soldier system and its components that we can use in the report.

17) From a design and/or user perspective:

a) What do you see as the strengths of your system?

b) What do you see as areas that require improvement in your system?

c) What would you do differently if you could start from scratch and develop a soldier system today?

18) What new capabilities are being considered for a future soldier system?

19) In case we have follow-on questions, would you please provide your telephone number? Are there any other persons we should contact that might help with our information gathering?:

a) MSgt Jeff Kennedy DSN 845-5883 / COM 781-225-5883.

TACPs operate a wide variety of dismounted field equipment as individual items. Some can be connected together, such as connecting a laser range finder and GPS to provide accurate target coordinates. The OCS will be our first “system” for dismounted TACPs to integrate it all into a system that’s tied together and managed by our Close Air Support System software.

Annex B – OVERVIEW OF THE RESULTS FROM THE DISMOUNTED SOLDIER SYSTEM QUESTIONNAIRE

Table B-1: Overview of the Results from the Dismounted Soldier System Questionnaire – Part 1.

Country		Development Stage	System Configurations	Platform Development	Platform Power	Power System
Australia	**L17**	Deployed	DSS specific role	Monolitic system	Power recharging	1 central power source
	L75	Prototype development and testing	1 configuration for all	Industrial system integrator	Power recharging	2 central power sources
	L125	Concept development and experimentation	DSS specific role	No information	No information	No information
Canada	**ASAP**	Prototype development and testing	Continuous modularity	Industrial system integrator	Power recharging	Hybrid, no master/slave
Finland	**W2020**	Prototype development and testing	1 configuration for all	Industrial system integrator	Power recharging	2 central power sources
France	**FÉLIN**	Deployed	1 configuration for all	Monolitic system	Power recharging	2 central power sources
Germany	**IdZ**	Deployed	2 or 3 standard configurations	Monolitic system	Power recharging	2 central power sources
Italy	**Sol Futuro**	Fielding	2 or 3 standard configurations	Industrial system integrator	Power recharging	1 central power source
Netherlands	**VOSS**	Prototype development and testing	2 or 3 standard configurations	Open platform interface	Vehicle power and data connection	1 central power source
Norway	**NORMANS**	Fielding	2 or 3 standard configurations	Industrial system integrator	No information	No information
Spain	**COMFUT**	Field trials	1 configuration for all	No information	No information	No information
Turkey	**Tek Er**	Concept development and experimentation	DSS specific role	No information	Power recharging	No information
UK	**GSA**	Prototype development and testing	Continuous modularity	Open platform interface	Vehicle power and data connection	1 central power source
USA	**NETT Warrior**	Fielding	Continuous modularity	Open platform interface	Power recharging	2 central power sources

Country		Development Stage	System Configurations	Platform Development	Platform Power	Power System
	TACP	Field trials	DSS specific role	Industrial system integrator	No information	1 central power source
	JIC-P		DSS specific role	No information	No information	No information
	SPIRIT	Field trials		No information	No information	No information
Undisclosed		No information	DSS specific role	No information	None	2 central power sources

Table B-2: Overview of the Results from the Dismounted Soldier System Questionnaire – Part 2.

Country		Hotswap	System Voltage Level	Data Transfer Protocol	Cabling	Energy Status/ User Interface
Australia	**L17**	Possible	9 – 35 V	USB Ethernet	Round	Display only
	L75	Possible	No information	No information	Round	Display with power management
	L125	No information	No information	No information	No information	No information
Canada	**ASAP**	Possible	No information	CAN-bus	Flat	No information
Finland	**W2020**	Future	No information	No information	Round	Display with power management
France	**FÉLIN**	No information	No information	USB	No information	No information
Germany	**IdZ**	Possible	No information	Ether net SMBus	Round	Display with power management
Italy	**Sol Futuro**	Possible (30s)	No information	USB Ethernet	Round	Display only
Netherlands	**VOSS**	Possible	No information	No information	No information	No information
Norway	**NORMANS**	No information	5 – 18 V (light), 5 – 28 V (advanced)	USB Ethernet	No information	Display with power management
Spain	**COMFUT**	No information	No information	No information	No information	No information

Country		Hotswap	System Voltage Level	Data Transfer Protocol	Cabling	Energy Status/ User Interface
Turkey	**Tek Er**	Future	5 V 9 – 36 V	USB Ethernet	Round	Display only
UK	**GSA**	Possible	10 – 32 V	USB	E-Textile	Display with power management
USA	**NETT Warrior**	Possible	No information	USB SMBus	Round	Display only
	TACP	No information	No information	USB	No information	No information
	JIC-P	Future	No information	USB SMBus	E-Textile	Display with PM for specific roles only
	SPIRIT	Possible	No information	USB	E-Textile	No information
Undisclosed		Possible	No information	USB	Round	Display only

REPORT DOCUMENTATION PAGE

1. Recipient's Reference	2. Originator's References	3. Further Reference	4. Security Classification of Document
	STO-TR-SET-206-Part-II AC/323(SET-206)TP/801	ISBN 978-92-837-2129-1	PUBLIC RELEASE

5. Originator

Science and Technology Organization
North Atlantic Treaty Organization
BP 25, F-92201 Neuilly-sur-Seine Cedex, France

6. Title

Overview of Dismounted Soldier Systems

7. Presented at/Sponsored by

This Report documents the findings of STO SET-206 as it relates to the trends of trade-offs of manwearable/manportable power systems on the dismounted soldier.

8. Author(s)/Editor(s)	9. Date
Multiple	November 2018

10. Author's/Editor's Address	11. Pages
Multiple	116

12. Distribution Statement

There are no restrictions on the distribution of this document. Information about the availability of this and other STO unclassified publications is given on the back cover.

13. Keywords/Descriptors

Centralized power
Dismounted soldier system
Modernization programme
Modular soldier system

14. Abstract

The NATO's Sensors and Electronics Technology Task Group on "Energy Generation for Manwearable/Manportable Applications and Remote Sensors" (SET-206) conducted an assessment of the power and data distribution and system architecture of dismounted soldier systems, both currently in use and planned for the future.

The dismounted soldier system assessment is based on the information gathered via a questionnaire and publicly available documents. The dismounted soldier system as discussed in this document is defined as the combination of items that support the assigned mission, which is what the soldier either wears on his body and head, what he carries in his rucksack and what has been fitted to his weapon system.

Most NATO countries have DSS modernization programmes running or at least have plans. Although different design choices are being made for the dismounted soldier systems, there are several general trends in the DSS development. This report describes the most important trends and trade-offs for the next-generation integrated soldier system solutions.

NORTH ATLANTIC TREATY ORGANIZATION

BP 25
F-92201 NEUILLY-SUR-SEINE CEDEX • FRANCE
Télécopie 0(1)55.61.22.99 • E-mail mailbox@cso.nato.int

SCIENCE AND TECHNOLOGY ORGANIZATION

DIFFUSION DES PUBLICATIONS

STO NON CLASSIFIEES

Les publications de l'AGARD, de la RTO et de la STO peuvent parfois être obtenues auprès des centres nationaux de distribution indiqués ci-dessous. Si vous souhaitez recevoir toutes les publications de la STO, ou simplement celles qui concernent certains Panels, vous pouvez demander d'être inclus soit à titre personnel, soit au nom de votre organisation, sur la liste d'envoi.

Les publications de la STO, de la RTO et de l'AGARD sont également en vente auprès des agences de vente indiquées ci-dessous.

Les demandes de documents STO, RTO ou AGARD doivent comporter la dénomination « STO », « RTO » ou « AGARD » selon le cas, suivi du numéro de série. Des informations analogues, telles que le titre est la date de publication sont souhaitables.

Si vous souhaitez recevoir une notification électronique de la disponibilité des rapports de la STO au fur et à mesure de leur publication, vous pouvez consulter notre site Web (http://www.sto.nato.int/) et vous abonner à ce service.

CENTRES DE DIFFUSION NATIONAUX

ALLEMAGNE
Streitkräfteamt / Abteilung III
Fachinformationszentrum der Bundeswehr (FIZBw)
Gorch-Fock-Straße 7, D-53229 Bonn

BELGIQUE
Royal High Institute for Defence – KHID/IRSD/RHID
Management of Scientific & Technological Research
for Defence, National STO Coordinator
Royal Military Academy – Campus Renaissance
Renaissancelaan 30, 1000 Bruxelles

BULGARIE
Ministry of Defence
Defence Institute "Prof. Tsvetan Lazarov"
"Tsvetan Lazarov" bul no.2
1592 Sofia

CANADA
DGSlST 2
Recherche et développement pour la défense Canada
60 Moodie Drive (7N-1-F20)
Ottawa, Ontario K1A 0K2

DANEMARK
Danish Acquisition and Logistics Organization
(DALO)
Lautrupbjerg 1-5
2750 Ballerup

ESPAGNE
Área de Cooperación Internacional en I+D
SDGPLATIN (DGAM)
C/ Arturo Soria 289
28033 Madrid

ESTONIE
Estonian National Defence College
Centre for Applied Research
Riia str 12
Tartu 51013

ETATS-UNIS
Defense Technical Information Center
8725 John J. Kingman Road
Fort Belvoir, VA 22060-6218

FRANCE
O.N.E.R.A. (ISP)
29, Avenue de la Division Leclerc
BP 72
92322 Châtillon Cedex

GRECE (Correspondant)
Defence Industry & Research General
Directorate, Research Directorate
Fakinos Base Camp, S.T.G. 1020
Holargos, Athens

HONGRIE
Hungarian Ministry of Defence
Development and Logistics Agency
P.O.B. 25
H-1885 Budapest

ITALIE
Ten Col Renato NARO
Capo servizio Gestione della Conoscenza
F. Baracca Military Airport "Comparto A"
Via di Centocelle, 301
00175, Rome

LUXEMBOURG
Voir Belgique

NORVEGE
Norwegian Defence Research
Establishment
Attn: Biblioteket
P.O. Box 25
NO-2007 Kjeller

PAYS-BAS
Royal Netherlands Military
Academy Library
P.O. Box 90.002
4800 PA Breda

POLOGNE
Centralna Biblioteka Wojskowa
ul. Ostrobramska 109
04-041 Warszawa

PORTUGAL
Estado Maior da Força Aérea
SDFA – Centro de Documentação
Alfragide
P-2720 Amadora

REPUBLIQUE TCHEQUE
Vojenský technický ústav s.p.
CZ Distribution Information Centre
Mladoboleslavská 944
PO Box 18
197 06 Praha 9

ROUMANIE
Romanian National Distribution
Centre
Armaments Department
9-11, Drumul Taberei Street
Sector 6
061353 Bucharest

ROYAUME-UNI
Dstl Records Centre
Rm G02, ISAT F, Building 5
Dstl Porton Down
Salisbury SP4 0JQ

SLOVAQUIE
Akadémia ozbrojených síl gen.
M.R. Štefánika, Distribučné a
informačné stredisko STO
Demänová 393
031 06 Liptovský Mikuláš 6

SLOVENIE
Ministry of Defence
Central Registry for EU & NATO
Vojkova 55
1000 Ljubljana

TURQUIE
Milli Savunma Bakanlığı (MSB)
ARGE ve Teknoloji Dairesi
Başkanlığı
06650 Bakanliklar – Ankara

AGENCES DE VENTE

The British Library Document Supply Centre
Boston Spa, Wetherby
West Yorkshire LS23 7BQ
ROYAUME-UNI

Canada Institute for Scientific and Technical Information (CISTI)
National Research Council Acquisitions
Montreal Road, Building M-55
Ottawa, Ontario K1A 0S2
CANADA

Les demandes de documents STO, RTO ou AGARD doivent comporter la dénomination « STO », « RTO » ou « AGARD » selon le cas, suivie du numéro de série (par exemple AGARD-AG-315). Des informations analogues, telles que le titre et la date de publication sont souhaitables. Des références bibliographiques complètes ainsi que des résumés des publications STO, RTO et AGARD figurent dans le « NTIS Publications Database » (http://www.ntis.gov).

NORTH ATLANTIC TREATY ORGANIZATION

BP 25
F-92201 NEUILLY-SUR-SEINE CEDEX • FRANCE
Télécopie 0(1)55.61.22.99 • E-mail mailbox@cso.nato.int

SCIENCE AND TECHNOLOGY ORGANIZATION

DISTRIBUTION OF UNCLASSIFIED STO PUBLICATIONS

AGARD, RTO & STO publications are sometimes available from the National Distribution Centres listed below. If you wish to receive all STO reports, or just those relating to one or more specific STO Panels, they may be willing to include you (or your Organisation) in their distribution.

STO, RTO and AGARD reports may also be purchased from the Sales Agencies listed below.

Requests for STO, RTO or AGARD documents should include the word 'STO', 'RTO' or 'AGARD', as appropriate, followed by the serial number. Collateral information such as title and publication date is desirable.

If you wish to receive electronic notification of STO reports as they are published, please visit our website (http://www.sto.nato.int/) from where you can register for this service.

NATIONAL DISTRIBUTION CENTRES

BELGIUM
Royal High Institute for Defence – KHID/IRSD/RHID
Management of Scientific & Technological Research for Defence, National STO Coordinator
Royal Military Academy – Campus Renaissance
Renaissancelaan 30
1000 Brussels

BULGARIA
Ministry of Defence
Defence Institute "Prof. Tsvetan Lazarov"
"Tsvetan Lazarov" bul no.2
1592 Sofia

CANADA
DSTKIM 2
Defence Research and Development Canada
60 Moodie Drive (7N-1-F20)
Ottawa, Ontario K1A 0K2

CZECH REPUBLIC
Vojenský technický ústav s.p.
CZ Distribution Information Centre
Mladoboleslavská 944
PO Box 18
197 06 Praha 9

DENMARK
Danish Acquisition and Logistics Organization (DALO)
Lautrupbjerg 1-5
2750 Ballerup

ESTONIA
Estonian National Defence College
Centre for Applied Research
Riia str 12
Tartu 51013

FRANCE
O.N.E.R.A. (ISP)
29, Avenue de la Division Leclerc – BP 72
92322 Châtillon Cedex

GERMANY
Streitkräfteamt / Abteilung III
Fachinformationszentrum der Bundeswehr (FIZBw)
Gorch-Fock-Straße 7
D-53229 Bonn

GREECE (Point of Contact)
Defence Industry & Research General Directorate, Research Directorate
Fakinos Base Camp, S.T.G. 1020
Holargos, Athens

HUNGARY
Hungarian Ministry of Defence
Development and Logistics Agency
P.O.B. 25
H-1885 Budapest

ITALY
Ten Col Renato NARO
Capo servizio Gestione della Conoscenza
F. Baracca Military Airport "Comparto A"
Via di Centocelle, 301
00175, Rome

LUXEMBOURG
See Belgium

NETHERLANDS
Royal Netherlands Military Academy Library
P.O. Box 90.002
4800 PA Breda

NORWAY
Norwegian Defence Research Establishment, Attn: Biblioteket
P.O. Box 25
NO-2007 Kjeller

POLAND
Centralna Biblioteka Wojskowa
ul. Ostrobramska 109
04-041 Warszawa

PORTUGAL
Estado Maior da Força Aérea
SDFA – Centro de Documentação
Alfragide
P-2720 Amadora

ROMANIA
Romanian National Distribution Centre
Armaments Department
9-11, Drumul Taberei Street
Sector 6
061353 Bucharest

SLOVAKIA
Akadémia ozbrojených síl gen M.R. Štefánika, Distribučné a informačné stredisko STO
Demänová 393
031 06 Liptovský Mikuláš 6

SLOVENIA
Ministry of Defence
Central Registry for EU & NATO
Vojkova 55
1000 Ljubljana

SPAIN
Área de Cooperación Internacional en I+D
SDGPLATIN (DGAM)
C/ Arturo Soria 289
28033 Madrid

TURKEY
Milli Savunma Bakanlığı (MSB)
ARGE ve Teknoloji Dairesi Başkanlığı
06650 Bakanliklar – Ankara

UNITED KINGDOM
Dstl Records Centre
Rm G02, ISAT F, Building 5
Dstl Porton Down, Salisbury SP4 0JQ

UNITED STATES
Defense Technical Information Center
8725 John J. Kingman Road
Fort Belvoir, VA 22060-6218

SALES AGENCIES

The British Library Document Supply Centre
Boston Spa, Wetherby
West Yorkshire LS23 7BQ
UNITED KINGDOM

Canada Institute for Scientific and Technical Information (CISTI)
National Research Council Acquisitions
Montreal Road, Building M-55
Ottawa, Ontario K1A 0S2
CANADA

Requests for STO, RTO or AGARD documents should include the word 'STO', 'RTO' or 'AGARD', as appropriate, followed by the serial number (for example AGARD-AG-315). Collateral information such as title and publication date is desirable. Full bibliographical references and abstracts of STO, RTO and AGARD publications are given in "NTIS Publications Database" (http://www.ntis.gov).

ISBN 978-92-837-2129-1