AD No. 14027
ASTIA FILE COPY

NATIONAL UNION RADIO CORPORATION
Orange, New Jersey

NU 2163 MINIATURE CATHODE RAY TUBE FINAL ENGINEERING REPORT

Air Force Contract
No AF 33(038)-17345

FINAL ENGINEERING REPORT

MINIATURE CATHODE RAY TUBE

R-2163

AIR FORCE CONTRACT NUMBER AF33(038)-17345

NATIONAL UNION RADIO CORPORATION

PROJECT NO. R-2163

FOREWORD

This report is concerned with those aspects of the work done under Contract AF 33(038)-17345 which concern the development of miniature cathode-ray tubes. The designation R-2163 was given to this aspect of the work and, when used in this report, will refer to the miniature cathode-ray tube.

Abstract

The design and production of an electrostatic focus and deflection miniature cathode ray tube are described. The tube was developed by National Union Radio Corp., Research Division, at Orange, N. J. during the period from November 1950 to April 1953. The tubes resulting from this work have good light output, resist shock and vibration, have no exposed exhaust tip, and should be widely applicable.

TABLE OF CONTENTS

		Page
Introduction		
Section I -	Design of Tube	1
	Envelope	1
	Stem	1
	Electron Gun	1
	Screen	3
	Complete Tube	3
	Measurements and Tests	3
Section II -	Production of Tube	6
	Envelope	6
	Screen	6
	Stem	7
	Electron Gun	7
	Processing	7
	Aging and Testing	7
Conclusions		8

LIST OF DRAWINGS AND PHOTOGRAPHS

Fig. No.	Title	Drawing No.
1	Face Plate	A-2163-1-22A
2	Miniature C.R.T. Envelope	A-2163-1-21
3	Stem	A-2163-1-24
4	Electron Gun Assembly	B-2163-1-13A
5	Mica Support	B-2163-1-11B
6	Grid Aperture & Heat Shield	A-2163-1-9
7	Cathode	A-2163-1-12A
8	Heater	A-2163-1-14
9	Light Shield	A-2163-1-26
10	Lens Cup	A-2163-1-15
11	Anode Cylinder	A-2163-1-18
12	Aperture Plate A_2	B-2163-1-5A
13	Aperture Plate A_1	A-2163-1-10
14	#3 & #4 Deflection Plate	A-2163-1-17
15	#1 & #2 Deflection Plate	A-2163-1-16
16	Support Spring	A-2163-1-3C
17	Gun (Photo)	
18	Finished Tube (Photo)	
19	Light Output vs Cathode Current	A-2163-1-25
20	Light Output vs. Time of Operation	A-2163-1-27

INTRODUCTION

There is a wide field for application of a miniature cathode-ray tube, which will operate at low applied voltages, for monitoring and trouble shooting. Such a tube was developed under Contract AF-33 (038)-17345 for the United States Air Force by National Union Radio Corp. Two versions of the tube were developed, which are identical except for the type of fluorescent screen employed. One version, hereafter designated R-2163P1, uses a Willemite screen (P-1), which gives a green trace and has medium persistence. The other, hereafter designated R-2163P7, uses a long persistence cascade phosphor (P-7).

In the following, the information applies equally well to the R-2163P1 or R-2163P7 unless specifically restricted to one model.

SECTION I Design of Tube

Envelope

The envelope is made of lead glass, Corning 0120, except for the face plate, which is made of "fourco" glass. Fourco is a soft glass which seals readily to 0120. Separate face plates are required to fulfill the face flatness specification of Exhibit MCREE-776. Figure 2 shows the envelope in cross-section with the stem shown sealed in; the face plate is shown in Figure 1.

Stem

The stem is a modified small button 9 pin stem. The modification is the use of a tubulation sealed to the stem at its center. The tube is evacuated through this tubulation. After processing, the tip-off is made as close as possible to the stem, and the glass tip remaining is pressed down nearly flush with the outside surface. Figure 3 shows the stem in cross-section before and after tip-off. This construction yields a tube with no exposed tip-off. The tube fits in a standard 9-pin miniature socket.

Electron Gun

The electron gun utilizes electrostatic focus and deflection. The metal parts are made of stainless steel, except for the cathode sleeve which is made of nickel. These parts are supported in their proper positions by two mica supports; the various focusing and deflecting plates have tabs which extend through holes in the mica and

are bent over flush with the mica. The tabs are also used to make electrical connections to the stem. The gun assembly is shown in Figure 4 and Figure 17 is a photograph of a complete mount. Figure 5 shows the mica support.

The cathode is flat and is mounted perpendicular to the tube axis; this construction helps reduce the length of the mount. Figure 7 shows the cathode sleeve. A folded tungsten heater (Figure 8) fits inside the cathode sleeve and heats it. One side of the heater is connected to the cathode. The cathode is coated only on that portion adjacent to the grid aperture (Figure 6). On the R-2163P7, a light shield, (Figure 9) is used over the hot end of the heater to reduce heater glow visible through the screen under low ambient light conditions. For the R-2163P1 the use of the light shield is optional.

The beam of electrons starts at the cathode, and passes through the grid aperture, whose potential with respect to the cathode determines the beam intensity. The beam then passes through the aperture in the lens cup (Figure 10) which is spotwelded to the anode cylinder (Figure 11) and, after traversing the anode cylinder emerges from the aperture in aperture plate A_2 (Figure 12). This aperture also limits the diameter of the beam. The next two plates, aperture plate A_1 (Figure 13) and a second aperture plate A_2, form a lens which focuses the beam. The focus is obtained by adjusting the potential on aperture plate A_1.

The beam next passes between two sets of mutually perpendicular deflection plates; first through #3 and #4 deflection plates (Figure 14),

then through #1 and #2 deflection plates (Figure 15). The beam then strikes the screen.

The electron gun is supported in the envelope by four support springs (Figure 16), which also serve to absorb shock and vibration. The tube is made more versatile by connecting each deflection plate to a separate stem pin. About ten percent of the cathode current reaches the screen, the rest having been absorbed by the limiting apertures. This figure compares favorably with other electrostatic guns.

Screen

The screen weight was adjusted to give maximum light output with minimum low-voltage electron burn. Low voltage electron burn is a decrease in screen sensitivity which occurs after bombardment with electrons of less than 1000 electron-volts energy. Sometimes there is a screen darkening as well.

For the R-2163P1 screen the optimum phosphor weight is 4 mg. per sq. cm. For the R-2163P7 the optimum screen is 20 mg. per sq. cm. total weight of which 60% is the yellow component and 40% the blue component.

The Complete Tube

Figure 18 is a photograph of the finished tube. The tentative specifications appear on pp 9-12.

Measurements and Tests

During its development and production, the tube was subjected

to the tests required in Exhibit MCREE-772. The tube passed the vibration test and a 500 g shock test. The tube meets all the requirements of the exhibit except the deflection factor and possibly the life test.

Life Test

Both the R-2163P1 and R-2163P7 tubes suffer a burning of the phosphor screen during life test. This is called low-voltage burn, and it is a characteristic property of cathode-ray tube phosphors. Efforts were made to eliminate this burning but all failed. What was finally done was to select the screen thickness and particle size which minimized the burn.

The burn phenomena causes the light output of the R-2163P1 to drop during life. Figure 20 shows a typical curve of light output vs time of operation. The life test of 20 R-2163P1 tubes showed that after 1000 hrs of operation, the tubes would produce 5 ft lamberts brightness with the standard test raster. However, the initial brightness of the tubes was about 20 ft lamberts. For the R-2163P7 tube the burn occurs in the blue layer; less light is produced here and thus the yellow layer is less strongly excited. The result is the persistence actually available for a given beam current drops during life.

For the R-2163P7, the persistence, estimated as directed in Note 1 of the R-2163P7 Tentative Specification, is still acceptable after a 1000 hours life test. 15 R-2163P7 tubes were life tested.

For the R-2163P1, the light output after a 1000 hours life test is just about 5 ft. lamberts according to measurements in this laboratory. But the absolute value of brightness values obtained by

a given method and setup is subject to considerable error. This means that other laboratories might fail to check these results and the tubes would fail the life test.

Another point which should be mentioned is the fact that, with both tubes, when the screen burns, its secondary emission ratio drops, and, if the ratio falls below one, the screen will soon charge to cathode potential and there will be no trace. This is particularly important for the lower operating voltages.

For these reasons, it is felt that a more realistic life test period would be 500 hours or less.

A word should be said about the P-7 screen operated at these voltages. The P-7 phosphor was developed for operation at several thousand volts, and has been rated at voltages no lower than 1500 volts. At the test voltage for the R-2163P7, 600 volts, persistence is shorter than that for higher voltages, but may still be long enough for some applications.

At an accelerating voltage of 300 volts, the light output falls, and the focus is poorer, while the deflection factor is improved.

Light Output

Light output was measured with a Weston photronic cell with Viscor filter, the output of which is amplified by a d-c amplifier. The set-up was calibrated against a Macbeth illuminometer using several calibrated color filters. A curve of light output vs. cathode current is shown in Figure 19.

SECTION II Production of the Tube

Envelope

The cylindrical wall of the envelope is made from 0120 glass tubing. The proper lengths are cut; then the face plates are sealed on, and the finished envelopes are annealed.

Screen

The screens for the R-2163P1 and R-2163P7 were applied by the settling process. Normal procedure was followed except for the decanting and drying steps. The process followed here was;

1. Clamp envelope at an angle.
2. Siphon off the settling liquid
3. Allow envelope to remain in this position for 10 minutes.
4. Remove envelope from clamped position.
5. Place envelope on table, face down.
6. Cover open end of envelope with aluminum foil.
7. Allow envelope to remain in this position for approximately two hours or until screen is dry.
8. Pump envelope for one minute and check with sparking coil.

An alternative method of screen application was developed for the R-2163P1. This consisted of spraying the face plates with phosphor before they were sealed to the wall cylinders. This method might have some advantages for larger production.

After the screen is applied, the cylinder walls are coated with aquadag by brush. The coated envelope is baked at 450°C; flushing with a

a stream of nitrogen while baking is desirable but not necessary.

Stem

The stems are made from standard small button 9 pin stems. The tubulations are sealed on, the stems are annealed and, after cleaning the leads, are ready for mounting.

Electron Gun

The metal parts are assembled in the mica supports and the tabs are bent over. In this process care must be taken to avoid damaging the coated surface of the cathode. The structure is then mounted on the stem, the electrodes connected to the proper pins, and the heater installed. Then the getters are attached, the support springs installed, and the mount checked.

Processing

The mounts are sealed in and the area heated by the sealing is flame-annealed. The tubes are checked for electrical shorts and glass cracks and then sealed on the pump. They are baked for 20 minutes at 370°C. The parts are out-gassed by r.f. bombardment and the cathode is activated in the usual way. The tubes are then tipped off as closely as possible to the stem and the little tip left is flattened out while it is still hot. The area around the stem is annealed for 20 minutes at 430°C in a little oven which leaves the rest of the tube at room temperature. This keeps the amount of gas liberated during annealing to a minimum. When the tube is cool, the getters are flashed and it is ready for test.

Aging and Testing

The cathode is aged first to stabilize the electron emission.

Then the tube is tested for electron emission, grid cut-off voltage, raster centering, and raster focus and appearance.

Conclusions

A miniature cathode-ray tube has been developed which operates at low voltages, has good light output, resists shock and vibration, and has no exposed exhaust tip. The versatility and small size of the tube should make it widely applicable for monitoring, trouble-shooting and many other uses.

Orange, N. J.

10 April 1953

F. Holborn

C. Bartholomew

Contract AF-33(038)17345

NATIONAL UNION RADIO CORPORATION
TENTATIVE SPECIFICATIONS FOR MINIATURE
CATHODE-RAY TUBE

R-2163P1

Description: Medium Persistence Miniature Cathode-Ray Tube

Ratings:	Ef V	E_{c1} Vdc	e_d Vdc	E_{b1} Vdc	E_{b2} Vdc	Rg Meg	Zd Meg	R_d Meg	Scan.Freq. Cps
Max.	6.3+10%	0	400	300	600	2	2	2	
Min.	6.3-10%	-50							
Test Conditions:	6.3	adj	-	Focus	600				60x2100-6300

Height: Max. 3.125 in.; Diameter Max. 0.875 in.

Base: Modified Small Button 9 pin

Pin No.	1	2	3	4	5	6	7	8	9
Element	G_1	D_1	D_3	H	HK	D_2	A_2	A_1	D_4

Cathode - Coated Unipotential.

Ref.	Test	Conditions	Min.	Bogie	Max.
F 8b(1)	* Heater Current	Ef=6.3 V	195	215	235 ma
F 8b(2)	* Anode 1 Current	Light 5 ft.L	-10	0	+10 ua
F 8b(2)	* Cathode Current	Light 5 ft.L			1000 ua
F 8b(4)	Voltage Breakdown				
F 8c(1)	+ Gas	Light 5 ft.L			
F 8d(1)	* Base Alignment	1D2 between Pins 2 & 3			
F 8f(2)	Fluorescent Color		P1		
F 8f(3)	** Persistence		P1		
F 8f(5)	Modulation	Light 5 ft.L	E_{c1}		40V
F 8f(4)	+ Light Output	Raster 1/2" X 1/2"	5 ft.L		
F 8g(1)	* Line Width "A"		Width		.25 mm
F 8j	Grid cut-off Voltage				40 V
F 8k(1)	* Focus Voltage	E_{b2}=600V	100		200

Ref	Test	Conditions	Min.	Bogie	Max.
F 8m	* Defl. Factor 1D2	E_{b2}=600 V	230	280	330
F 8m	* Defl. Factor 3D4	E_{b2}=600 V	230	280	330
F 6p(1)	** Capacitances				
	g_1 to all				4uuf
	K to all				2 uuf
	D_1 to D_2				1 uuf
	D_3 to D_4				1 uuf
	D_1 to all				3 uuf
	D_3 to all				3 uuf
	D_1 to all except D_2				2 uuf
	D_2 to all except D_1				2 uuf
	D_3 to all except D_4				2 uuf
	D_4 to all except D_3				2 uuf
F 4a(2)	Life Test	Note 1	T = 1000 hrs		
F 4b	Life Test End Point		Line width A		0.50 mm
			Line width B		0.75 mm
			Modulation		50 V

Note 1 - To be run with Light Output at 5 ft. lamberts.

Contract AF-33(038)-17345

NATIONAL UNION RADIO CORP.

TENTATIVE SPECIFICATIONS FOR MINIATURE CATHODE-RAY TUBE

R-21637

Description: Long Persistence Miniature Cathode-Ray Tube

Ratings:	E_f V	E_{c1} Vdc	E_d Vdc	E_{b1} Vdc	E_{b2} Vdc	Rg Meg	Zd Meg	R_d Meg	Scan.Freq. cps
Max.	6.3+10%	0	400	300	600	2	2	2	
Min.	6.3-10%	-50							
Test Conditions:	6.3	adj	-	Focus	600				60 x 2100-6300

Height: Max. 3.125 in.; Diameter Max. 0.875 in.

Base: Modified Small Button 9 pin

Pin No.	1	2	3	4	5	6	7	8	9
Element	G_1	D_1	D_3	H	HK	D_2	A_2	A_1	D_4

Cathode - Coated Unipotential.

Ref.	Test	Conditions	Min.	Bogie	Max.
F 8b(1)	Heater Current	Ef= 6.3 V	195	215	235 ma
F 8b(2)	Anode 1 Current	Ik = 500 ua	-10	0	+10 ua
F 8b(2)	Cathode Current				1000 ua
F 8b(4)	Voltage Breakdown				
F 8c(1)	Gas	Ik = 500 ua			
F 8d(1)	Base Alignment	Id2 between Pins 2 & 3			
F 8f(3)	persistence	See Note 1	P-7		
F 8g(1)	Line Width "A"		Width		.25 mm
F 8j	Grid cut-off Voltage				40 V
F 8k(1)	Focus Voltage	E_{b2}= 600 V	100	150	200
F 8m	Defl. Factor Id2	E_{b2}= 600 V	230	280	330
F 8m	Defl. Factor 3D4	E_{b2}= 600 V	230	280	330

Ref.	Test	Conditions	Min.	Bogie	Max.
F 6p(1)	Capacitances				
	g1 to all				4 uuf
	K to all				2 uuf
	D_1 to D_2				1 uuf
	D_3 to D_4				1 uuf
	D_1 to all				3 uuf
	D_3 to all				3 uuf
	D_1 to all except D_2				2 uuf
	D_2 to all except D_1				2 uuf
	D_3 to all except D_4				2 uuf
	D_4 to all except D_3				2 uuf
F 4a(2)	Life Test	See Note 2	T=1000 hrs.		
F 4b	Life Test End Point		Line width A		0.50 mm
			Line width B		0.75 mm
			Modulation		50 V

Note 1. The persistence shall be estimated as follows:
with a raster of 1/2" X 1/2", 35 to 105 lines, I_k = 800 ua, excite the screen for 30 sec., then cut off the beam suddenly. In a dark room, the persistent trace must be visible after 5 sec.

Note 2. To be run with 1/2" X 1/2" raster of 60 frames per second, 35 to 105 lines, I_k = 250 ua.

DWG. NO.
A-2163-[illegible]22 A

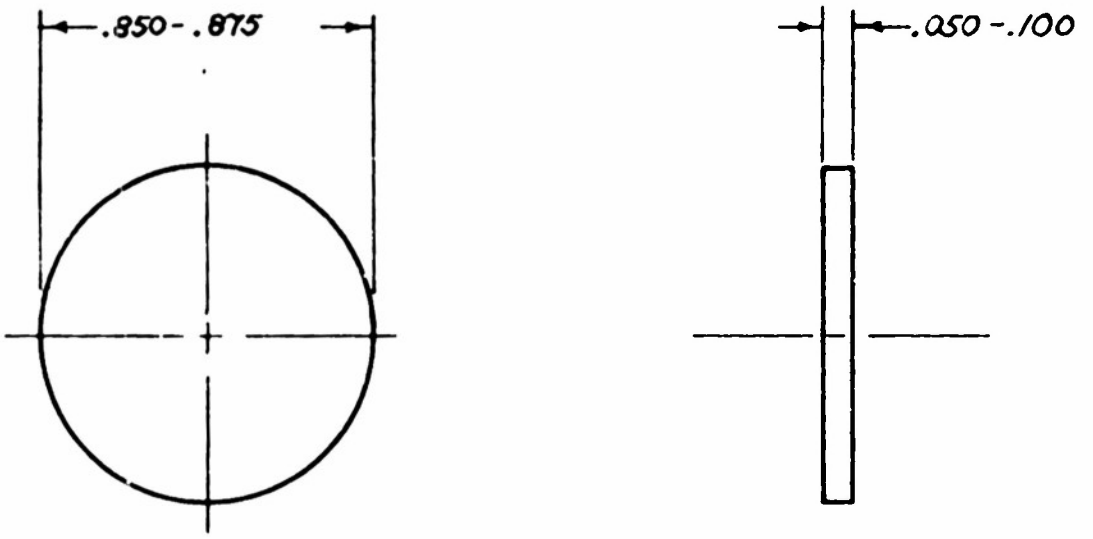

MAT. : - CLEAR FOURCO GLASS

NATIONAL UNION RADIO CORPORATION - RESEARCH DIVISION - 350 SCOTLAND ROAD ORANGE, N. J.

Date	RECORD OF CHANGES
7-8-52	DIA. WAS .850 - .860 NOW .850 - .875
7-8-52	CORNERS WERE ROUNDED

Originally Designed For Tube Type:

Underlined Dimensions are Not to Scale
UNLESS OTHERWISE SPECIFIED:
DIMENSIONS ARE IN INCHES
All Parts Must Be Free From Burrs
True Centers Within .001" of Center Line
Unless Otherwise Specified, Tolerances
Are Decimal Dimensions ± 5% or ± .005"
Whichever is Smaller
Fractional Dimensions ± .015"
Angles ± ½

MAIN TITLE: FACE PLATE

SUB TITLE:

Supersedes: A-2163-1-22 Scale: 2:1

Drawn: R.E.B. Date: 7-8-52 Appd. Date

Traced Date Dwg. No. A-2163-1-22 A

Checked Date

A-21[redacted]-1-21

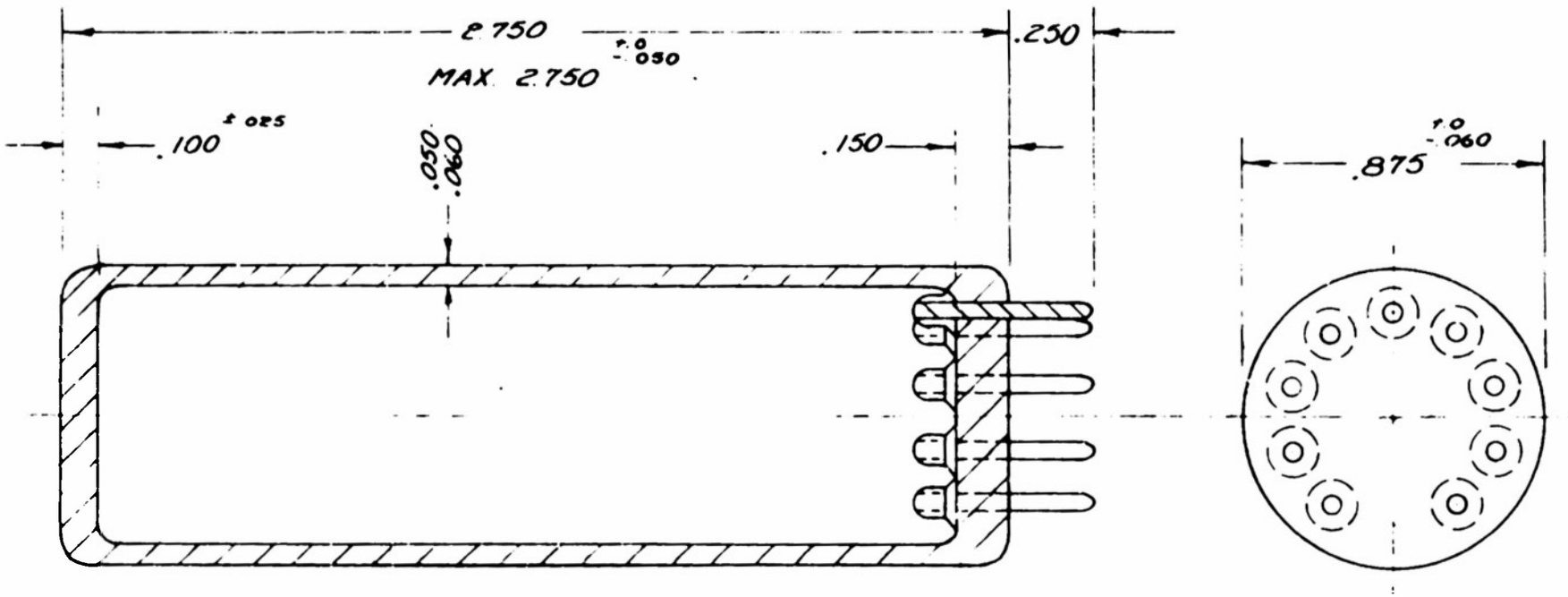

NATIONAL UNION RADIO CORPORATION - RESEARCH DIVISION - 350 SCOTLAND ROAD, ORANGE, N. J.

Date	RECORD OF CHANGES

Originally Designed For Tube Type:

Underlined Dimensions are Not to Scale.
UNLESS OTHERWISE SPECIFIED:
DIMENSIONS ARE IN INCHES
All Parts Must Be Free From Burrs.
True Centers Within .001" of Center Line
Unless Otherwise Specified, Tolerances
Are Decimal Dimensions ± 5% or ± .005"
Whichever is Smaller.
Fractional Dimensions ± .015"
Angles ± 1/2°

MAIN TITLE: MINIATURE C.R.T. ENVELOPE

SUB TITLE:

Supersedes		Scale	2:1
Drawn	Date 2.8.52	Appd	Date
Traced	Date	Dwg No	A-2163-1-21
Checked	Date		

Figure No 2

A-2163[redacted]24

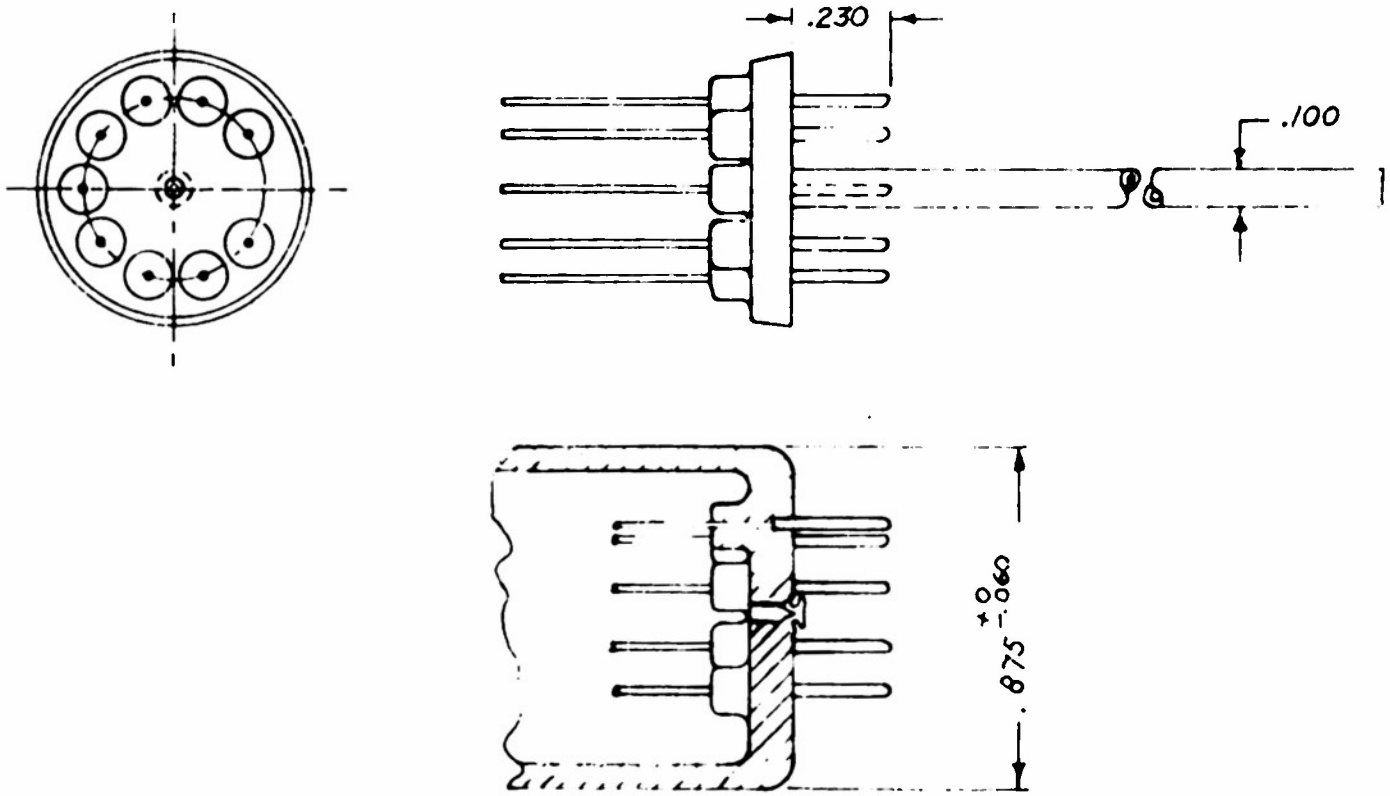

NATIONAL UNION RADIO CORPORATION · RESEARCH DIVISION · 350 SCOTLAND ROAD, ORANGE, N. J.

Date	RECORD OF CHANGES

Originally Designed For Tube Type:

Underlined Dimensions are Not to Scale
UNLESS OTHERWISE SPECIFIED:
DIMENSIONS ARE IN INCHES
All Parts Must Be Free From Burrs
True Centers Within .001" of Center Line
Unless Otherwise Specified, Tolerances
Are Decimal Dimensions ± 5% or ± .005"
Whichever is Smaller.
Fractional Dimensions ± .015"
Angles ± 1/2

MAIN TITLE: STEM - BEFORE & AFTER

SUB TITLE:

Supersedes: Scale 2:1

Drawn: RCI Date 7-9-52 Appd Date

Traced Date Dwg No

Checked Date A-2163-1-24

Figure No 3

Dwg No. B-2163-1-13A

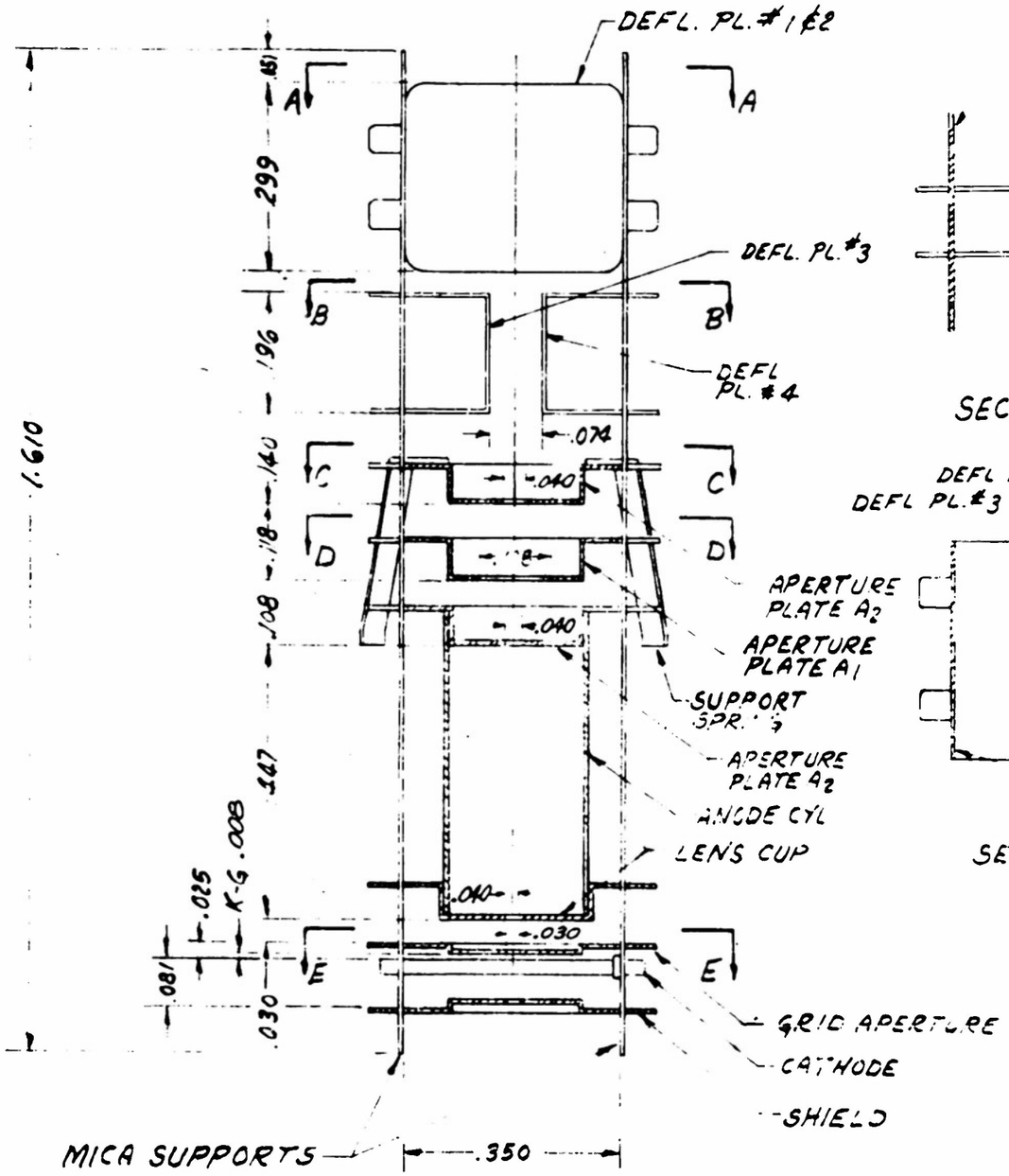

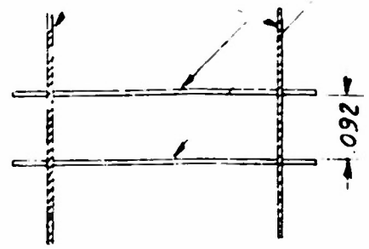

SECTION AA

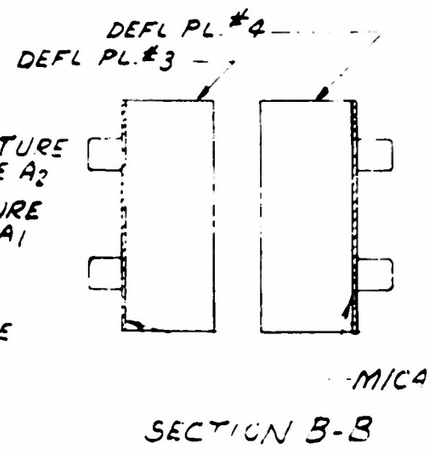

SECTION B-B

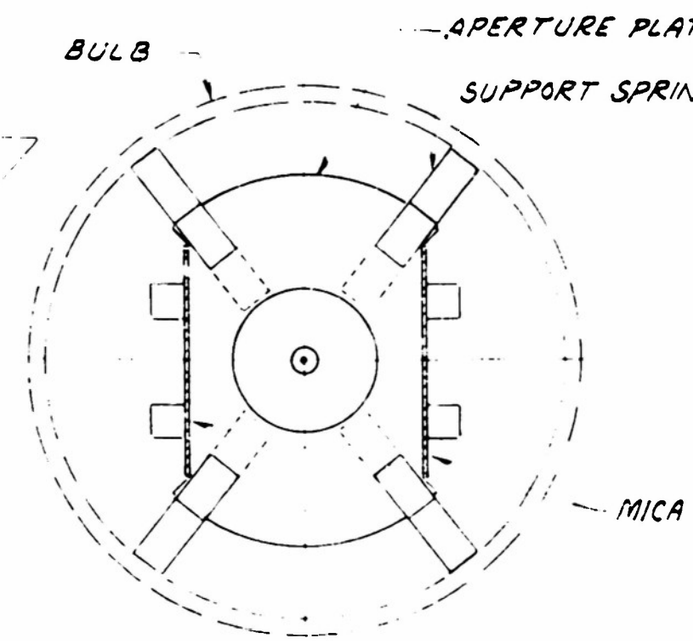

SECTION C-C

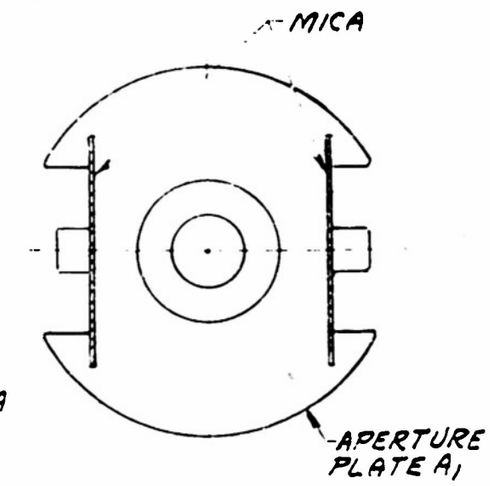

SECTION D-D

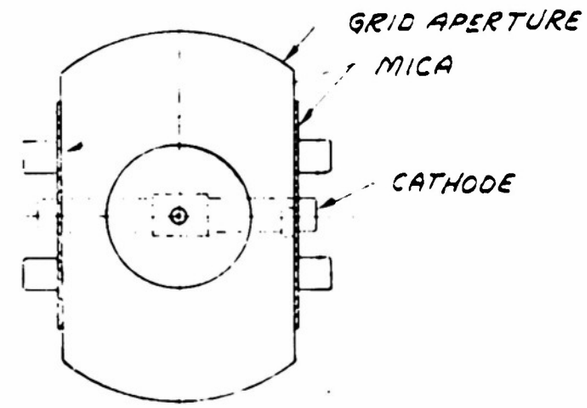

SECTION E-E

Figure No. 4

NATIONAL UNION RADIO CORPORATION - RESEARCH DIVISION - 350 SCOTLAND ROAD, ORANGE, N. J.

Date	RECORD OF CHANGES
3-28-51	REVISED
4-26-51	REVISED AS PER DETAILS

Originally Designed For Tube Type:

Underlined Dimensions are Not to Scale.
UNLESS OTHERWISE SPECIFIED
DIMENSIONS ARE IN INCHES
All Parts Must Be Free From Burrs
True Centers Within .001" of Center Line
Unless Otherwise Specified, Tolerances
Are Decimal Dimensions ± .5 or ± .005"
Whichever is Smaller.
Fractional Dimensions ± 0'5"
Angles ± 0

MAIN TITLE: ELECTROSTATIC GUN ASSEMBLY
SUB TITLE:

Supersedes
Scale: 4-1
Drawn: H. DILLY 1-8-51 Date
Appd Date
Traced Date
Dwg No. B-2163-1-13A
Checked Date

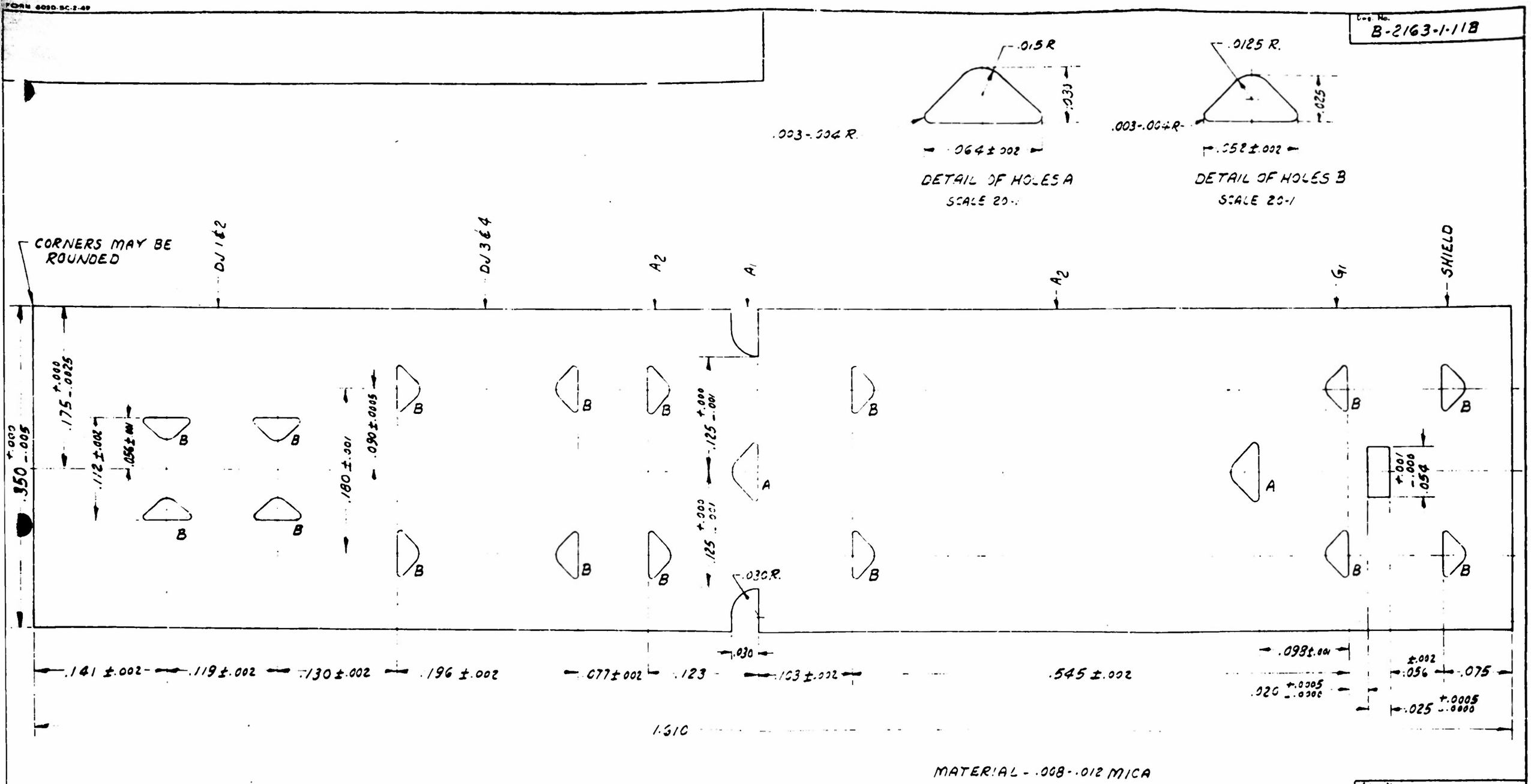

Figure No. 5

NATIONAL UNION RADIO CORPORATION - RESEARCH DIVISION - 350 SCOTLAND ROAD, ORANGE, N. J.

Date	RECORD OF CHANGES

Originally Designed For Tube Types

Underlined Dimensions are Not to Scale.
UNLESS OTHERWISE SPECIFIED,
DIMENSIONS ARE IN INCHES.
All Parts Must Be Free From Burrs.
True Centers Within .005" of Center Line
Unless Otherwise Specified, Tolerances
Are Decimal Dimensions ± .5 or ± .0
Whichever is Smaller.
Fractional Dimensions ± .015
Angles ± 0

MAIN TITLE: MICA SUPPORT

SUB TITLE:

Supersedes:

Scales: 10-1

Drawn: H. L. DILLY Date: 3-13-51

Traced: Date:

Checked: Date:

Appd.: Date:

Dwg. No.: B 2163-1-11B

DWG. NO.
A-2163-1-9

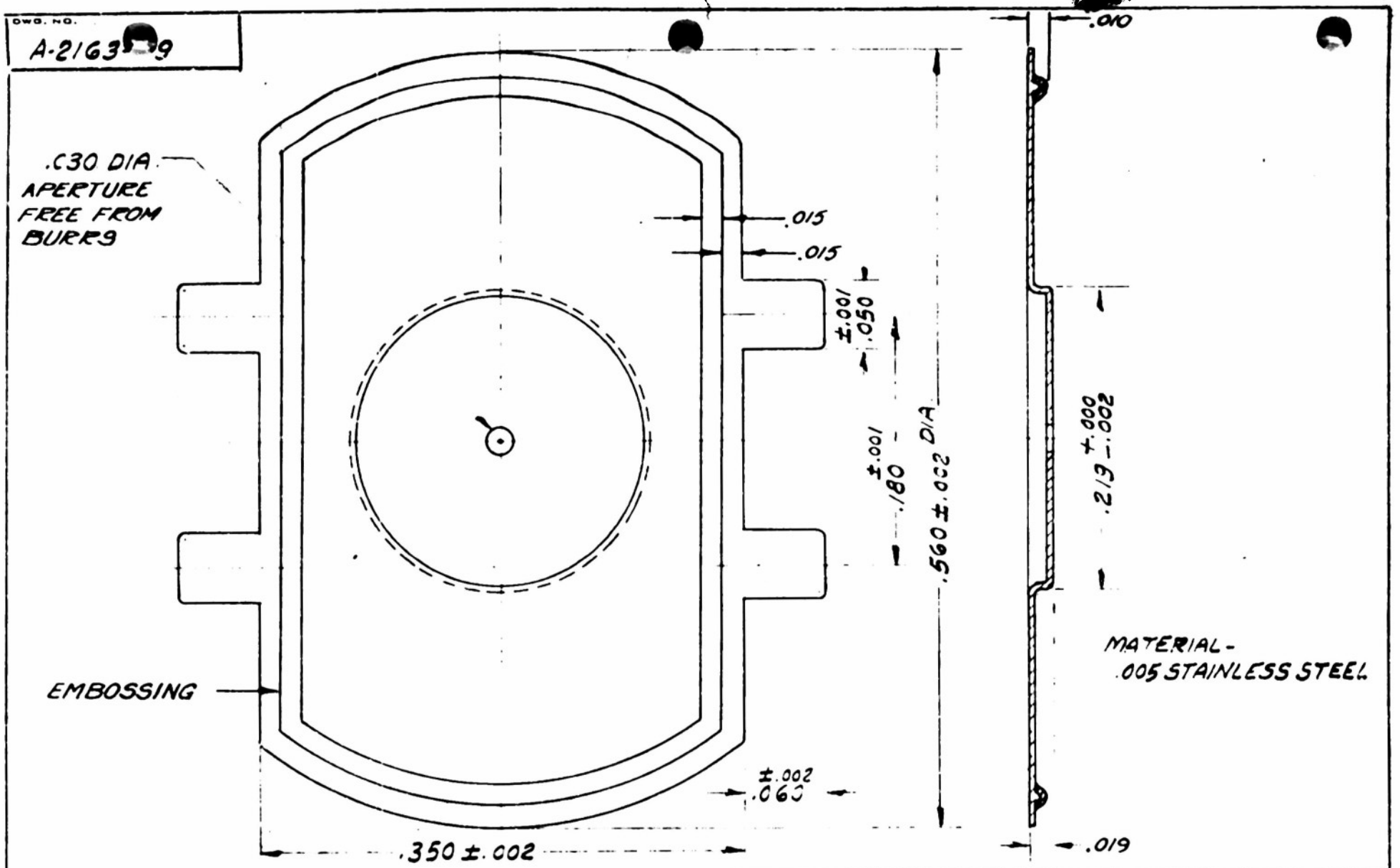

NATIONAL UNION RADIO CORPORATION - RESEARCH DIVISION - 350 SCOTLAND ROAD, ORANGE, N. J.

Figure No. 9

Date	RECORD OF CHANGES
11-21-51	ADDED EMBOSSING & .380 DIA. WAS .020

Originally Designed For Tube Type.

Underlined Dimensions are Not to Scale.
UNLESS OTHERWISE SPECIFIED,
DIMENSIONS ARE IN INCHES.
All Parts Must Be Free From Burrs.
True Centers Within .001" of Center Line
Unless Otherwise Specified, Tolerances
Are Decimal Dimensions ± 5% or ± .005" Whichever is Smaller.
Fractional Dimensions ± .015"
Angles ± ½°

MAIN TITLE: GRID APERTURE & HEAT SHIELD

SUB TITLE:

Supersedes

Scale: 10-1

Drawn: H.L. DILLY Date: 12-12-50

Traced Date

Checked Date

Appd. Date

Dwg No. A-2163-1-9

A-2163 12A

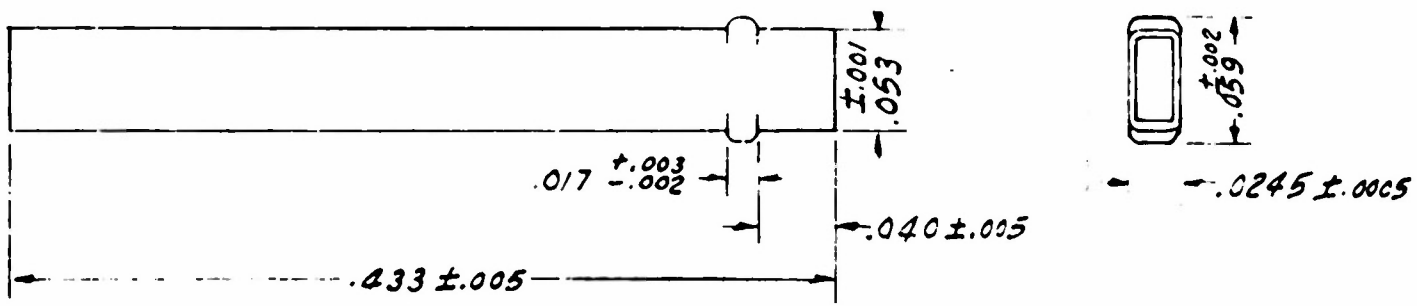

NOTE-
SEAMLESS.

MATERIAL-
.002 ± .00025 NICKEL

NATIONAL UNION RADIO CORPORATION - RESEARCH DIVISION - 350 SCOTLAND ROAD, ORANGE, N J

Date	RECORD OF CHANGES
-22-50	REVISED

Originally Designed For Tube Type:

Underlined Dimensions are Not to Scale.
UNLESS OTHERWISE SPECIFIED:
DIMENSIONS ARE IN INCHES
All Parts Must Be Free From Burrs.
True Centers Within .001" of Center Line
Unless Otherwise Specified, Tolerances
Are Decimal Dimensions ± 5% or ± .005"
Whichever is Smaller.
Fractional Dimensions ± .015"
Angles ± ½

MAIN TITLE: CATHODE

SUB TITLE: R-2163

Supersedes

Scale: 10-1

Drawn: H.L. DILLY Date: 1-4-51 Appd. Date

Traced Date

Checked Date

Dwg. No. A-2163-1-12A

Figure No. 7

A-2163- '4

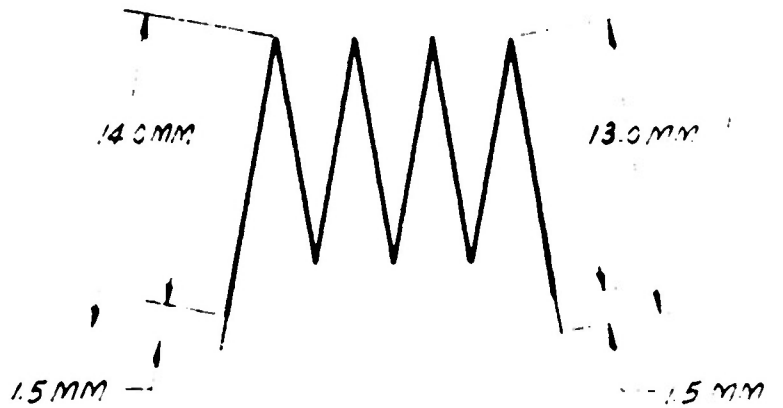

MATERIAL - TUNGSTEN
WT PER 200 MM - 4.81 MG./200 MM
CUT LENGTH - 87 MM
LEGS - 14-10-10-10-10-10-10-13
COATED DIA - .007-.008
DIP COATING - ALL BENDS (OPTIONAL)
COATING MATERIAL - INSULATION MIXTURE #HC-8 N.U.R.C McCARTER HWY PLANT, NEWARK, N.J
DIP COATING MATERIAL - " " # DA-3 " " " " "

Figure No. 8

NATIONAL UNION RADIO CORPORATION - RESEARCH DIVISION - 350 SCOTLAND ROAD, ORANGE, N. J.

Date	RECORD OF CHANGES
11-21-51	4.81 mg WAS 2.70 mg
4-6-53	(OPTIONAL) ADDED TO DIP COATING NOTE A.C.B.

Originally Designed For Tube Type:

Underlined Dimensions are Not to Scale.
UNLESS OTHERWISE SPECIFIED:
DIMENSIONS ARE IN INCHES.
All Parts Must Be Free From Burrs.
True Centers Within .001" of Center Line
Unless Otherwise Specified, Tolerances
Are Decimal Dimensions ± 5% or ± .005" Whichever is Smaller.
Fractional Dimensions ± .015"
Angles ± ½°

MAIN TITLE: HEATER

SUB TITLE:

Supersedes:

Scale: 3-1

Drawn: H.L. DILLY Date: 2-15-51

Traced: Date:

Checked: Date:

Appd.: Date:

Dwg. No.: A-2163-1-14

N.J. 2A 2500-3-50

DWG. NO.
A-216. :-26

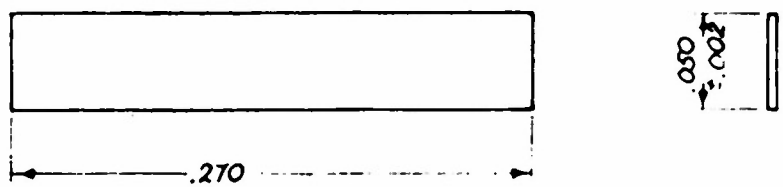

MATERIAL .005 STAINLESS STEEL

NATIONAL UNION RADIO CORPORATION - RESEARCH DIVISION - 350 SCOTLAND ROAD, ORANGE, N J

Date	RECORD OF CHANGES

Originally Designed For Tube Type

Undimensioned Dimensions are Not to Scale
UNLESS OTHERWISE SPECIFIED
DIMENSIONS ARE IN INCHES
All Parts Must Be Free From Burrs
True Centers Within .001 of Center Line
Unless Otherwise Specified Tolerances
Are Decimal Dimensions ± .5% or ± .005
Whichever is Smaller
Fractional Dimensions ± .015"
Angles ± 1°

MAIN TITLE
LIGHT SHIELD

SUB TITLE

Supervisor
Scale 10:1
Drawn R.C.B. Date 1-27-53
Approved Date
Traced Date
Dwg. No A-2163-1-26
Checked Date

A-2163-15

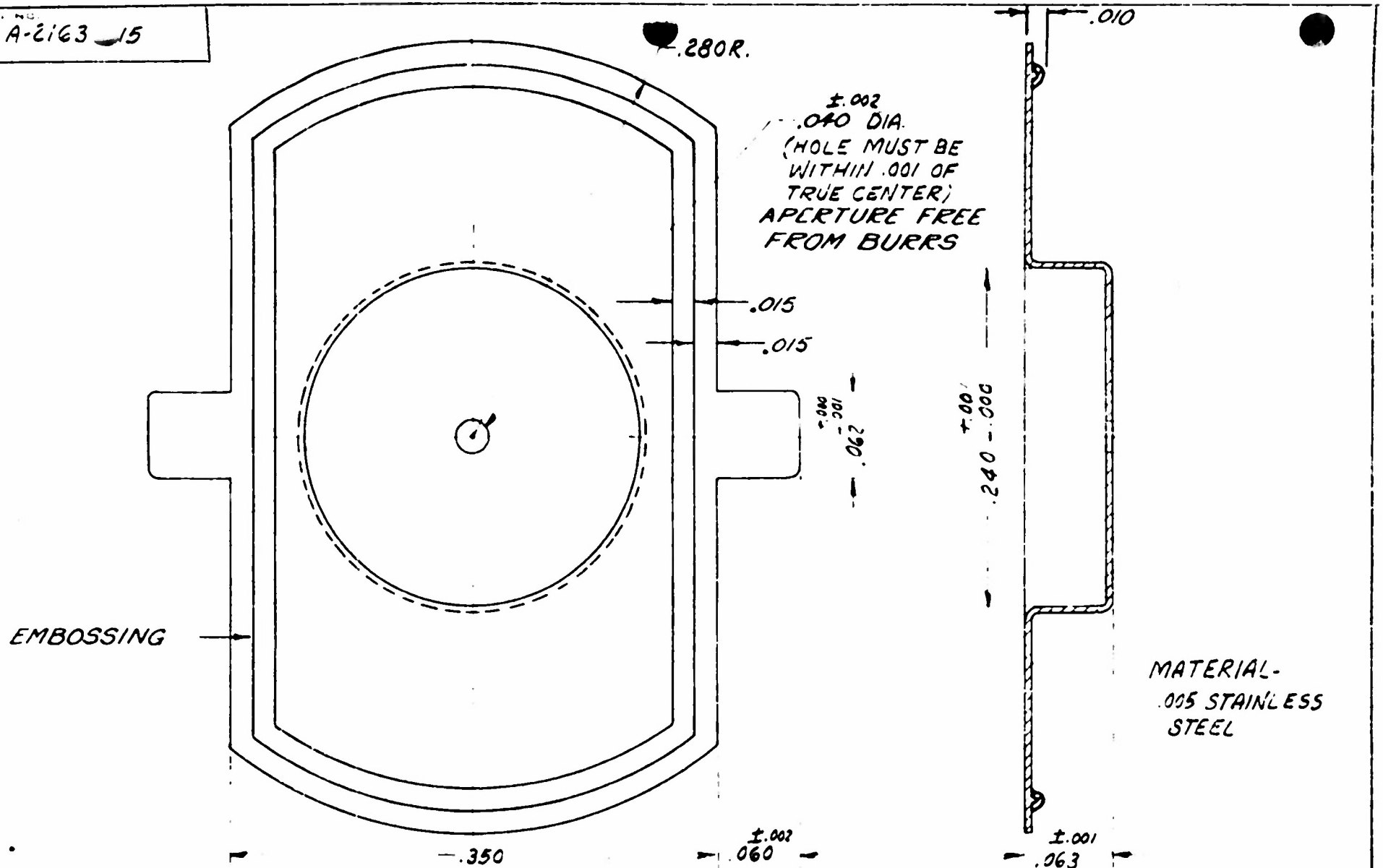

NATIONAL UNION RADIO CORPORATION - RESEARCH DIVISION - 350 SCOTLAND ROAD, ORANGE, N. J.

Figure No. 01

Date	RECORD OF CHANGES
11-21-51	ADDED EMBOSSING & .040 DIA. WAS .024

Originally Designed For Tube Type:

Underlined Dimensions are Not to Scale
UNLESS OTHERWISE SPECIFIED,
DIMENSIONS ARE IN INCHES.
All Parts Must Be Free From Burrs
True Centers Within .001" of Center Line
Unless Otherwise Specified, Tolerances
Are Decimal Dimensions ± .5% or ± .005
Whichever is Smaller.
Fractional Dimensions ± .015"
Angles ± ½°

MAIN TITLE: LENS CUP

SUB TITLE:

Supersedes

Scale: 10-1

Drawn: H. L. DILLY Date: 3-12-51

Traced Date

Checked Date

Appd Date

Dwg. No. A-2163-1-15

DWG. NO.
A-2163-. 8

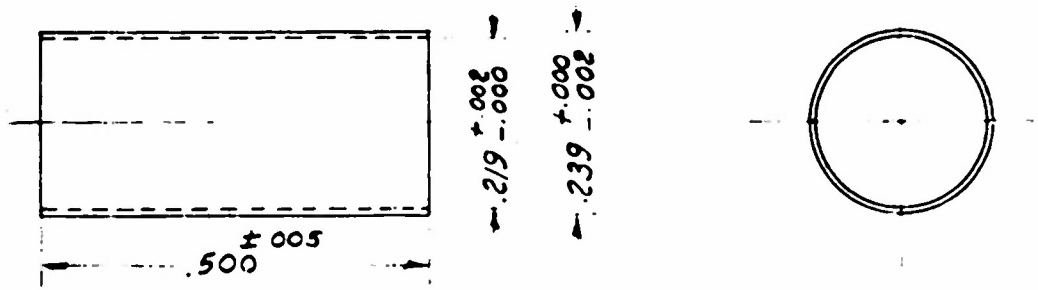

MATERIAL - STAINLESS STEEL

NATIONAL UNION RADIO CORPORATION - RESEARCH DIVISION - 350 SCOTLAND ROAD, ORANGE, N. J.

Figure No. 11

Date	RECORD OF CHANGES
11-21-51	MAT WAS NICKEL
4-6-53	TOLERANCE ON .500 DIMENSION WAS .002 R.E.B.

Originally Designed For Tube Type:

Underlined Dimensions are Not to Scale.
UNLESS OTHERWISE SPECIFIED:
DIMENSIONS ARE IN INCHES
All Parts Must Be Free From Burrs.
True Centers Within .001" of Center Line
Unless Otherwise Specified, Tolerances
Are Decimal Dimensions ± 5% or + .005"
Whichever is Smaller.
Fractional Dimensions + .015"
Angles + ½°

MAIN TITLE: ANODE CYLINDER

SUB TITLE:

Supersedes:

Scale: 4-1

Drawn: H.L. DILLY Date: 5-28-51

Appd. Date

Traced Date

Dwg. No. A-2163-1-18

Checked Date

[illegible]A [illegible]0-3-50

Dwg No. B-2163-1-5A

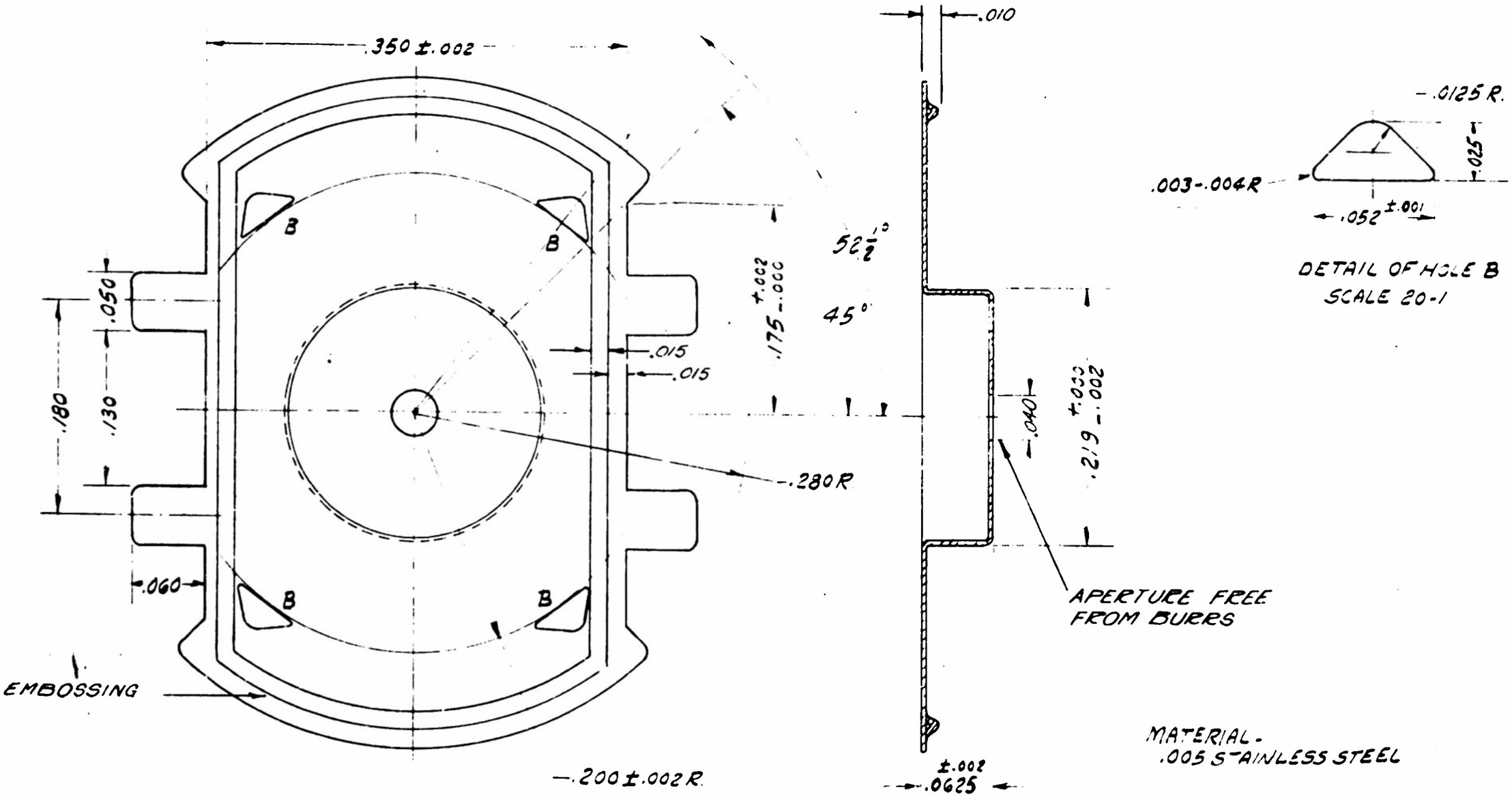

Figure No. 12

NATIONAL UNION RADIO CORPORATION · RESEARCH DIVISION · 350 SCOTLAND ROAD, ORANGE, N. J.

Date	RECORD OF CHANGES
1-8-51	TOL ON .175 DIM WAS ±.002
11-26-51	ADDED EMBOSSING, OPENING IN CENTER MADE 040

Originally Designed For Tube Type:

Underlined Dimensions are Not to Scale.
UNLESS OTHERWISE SPECIFIED
DIMENSIONS ARE IN INCHES.
All Parts Must Be Free From Burrs
True Centers Within .001" of Center Line
Unless Otherwise Specified, Tolerances
Are Decimal Dimensions ± .5% or ± .005"
Whichever is Smaller.
Fractional Dimensions ± .015"
Angles ± 0

MAIN TITLE: APERTURE PLATE A_2

SUB TITLE:

Supersedes:

Scales: 10-1

Drawn: H.L. DILLY Date: 12-8-50

Appd: Date:

Traced: Date:

Checked: Date:

Dwg No. B-2163-1-5A

DWG. NO.
A-2163-1-10

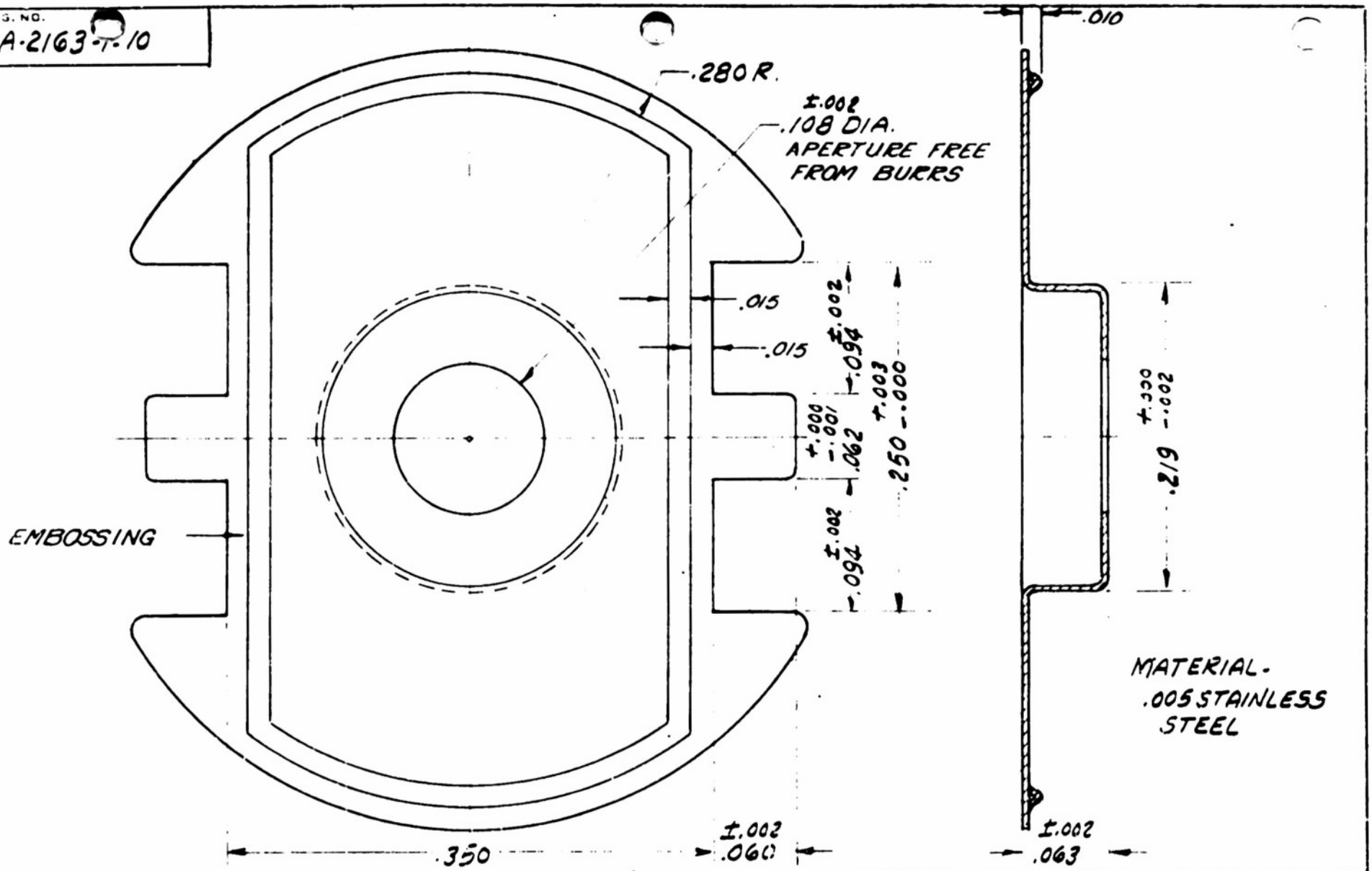

NATIONAL UNION RADIO CORPORATION - RESEARCH DIVISION - 350 SCOTLAND ROAD, ORANGE, N. J.

Figure No. 13

Date	RECORD OF CHANGES
11-21-51	ADDED EMBOSSING

Originally Designed For Tube Type:

Underlined Dimensions are Not to Scale.
UNLESS OTHERWISE SPECIFIED:
DIMENSIONS ARE IN INCHES.
All Parts Must Be Free From Burrs.
True Centers Within .001" of Center Line
Unless Otherwise Specified, Tolerances
Are Decimal Dimensions ± .5% or ± .005" Whichever is Smaller.
Fractional Dimensions ± .015"
Angles ± ½°

MAIN TITLE: APERTURE PLATE A1
SUB TITLE:
Supersedes
Scale: 10-1
Drawn: H.L. DILLY Date: 12-13-50
Appd. Date
Traced Date
Checked Date
Dwg. No. A-2163-1-10

DWG. NO. A-2163-1-17

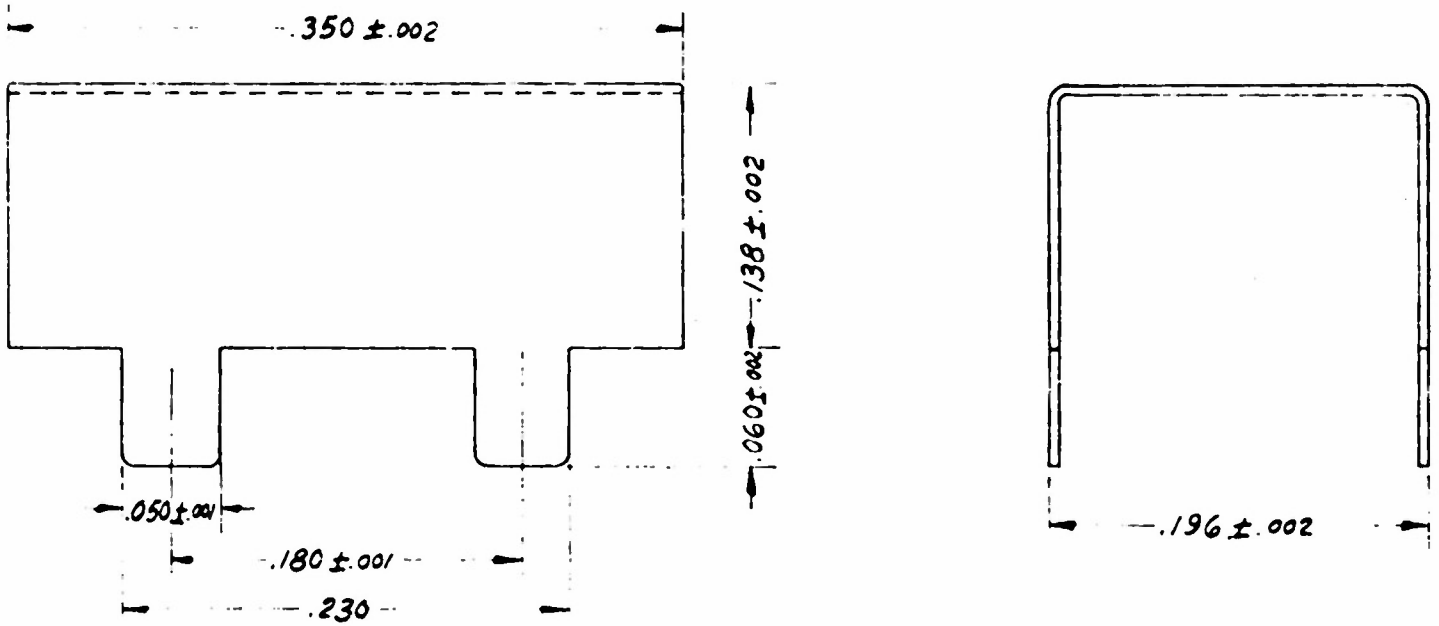

MATERIAL-
.005 STAINLESS STEEL

NATIONAL UNION RADIO CORPORATION - RESEARCH DIVISION - 350 SCOTLAND ROAD, ORANGE, N. J.

Date	RECORD OF CHANGES

Originally Designed For Tube Type:

Underlined Dimensions are Not to Scale
UNLESS OTHERWISE SPECIFIED:
DIMENSIONS ARE IN INCHES
All Parts Must Be Free From Burrs.
True Centers Within .001" of Center Line
Unless Otherwise Specified, Tolerances
Are Decimal Dimensions ± 5% or ± .005"
Whichever is Smaller.
Fractional Dimensions ± .015"
Angles ± ½°

MAIN TITLE #3 & #4 DEFLECTION PLATES

SUB TITLE

Supersedes

Scale: 10-1

Drawn H.L. DILLY Date 3-12-51

Appd. Date

Traced Date

Dwg No. A-2163-1-17

Checked Date

Figure No. 14

NUVEA 2500-3-50

DWG. NO.
A-2163-1-16

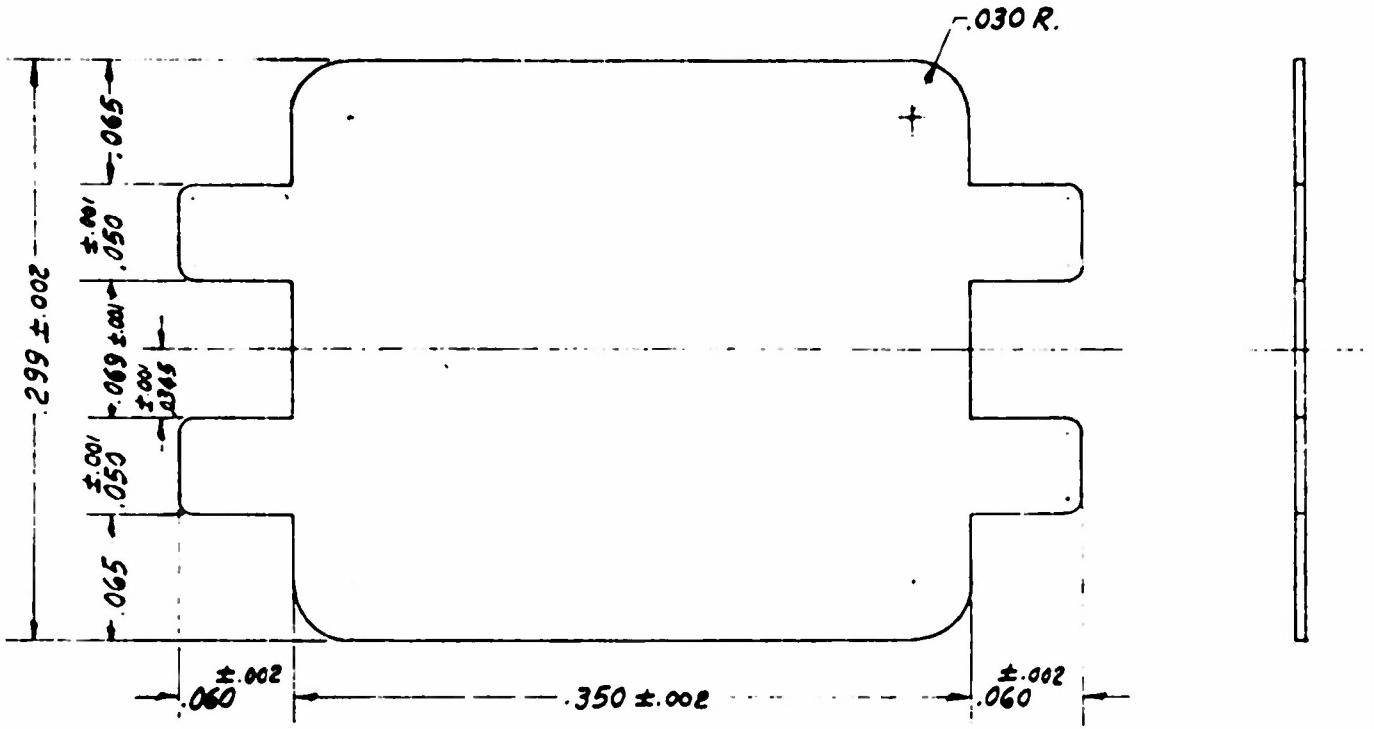

MATERIAL -
.005 STAINLESS STEEL

NATIONAL UNION RADIO CORPORATION - RESEARCH DIVISION - 350 SCOTLAND ROAD, ORANGE, N. J.

Figure No. 15

Date	RECORD OF CHANGES

Originally Designed For Tube Type:

Underlined Dimensions are Not to Scale.
UNLESS OTHERWISE SPECIFIED:
DIMENSIONS ARE IN INCHES.
All Parts Must Be Free From Burrs.
True Centers Within .001" of Center Line
Unless Otherwise Specified, Tolerances
Are Decimal Dimensions ± 5% or ± .003" Whichever Is Smaller.
Fractional Dimensions ± .015"
Angles ± ½°

MAIN TITLE
#1 & #2 DEFLECTION PLATES

SUB TITLE

Supersedes

Scale: 10-1

Drawn H.L.DILLY Date 3-12-51

Appd. Date

Traced Date

Dwg No. A-2163-1-16

Checked Date

DWG. NO.
A-2163-1-3C

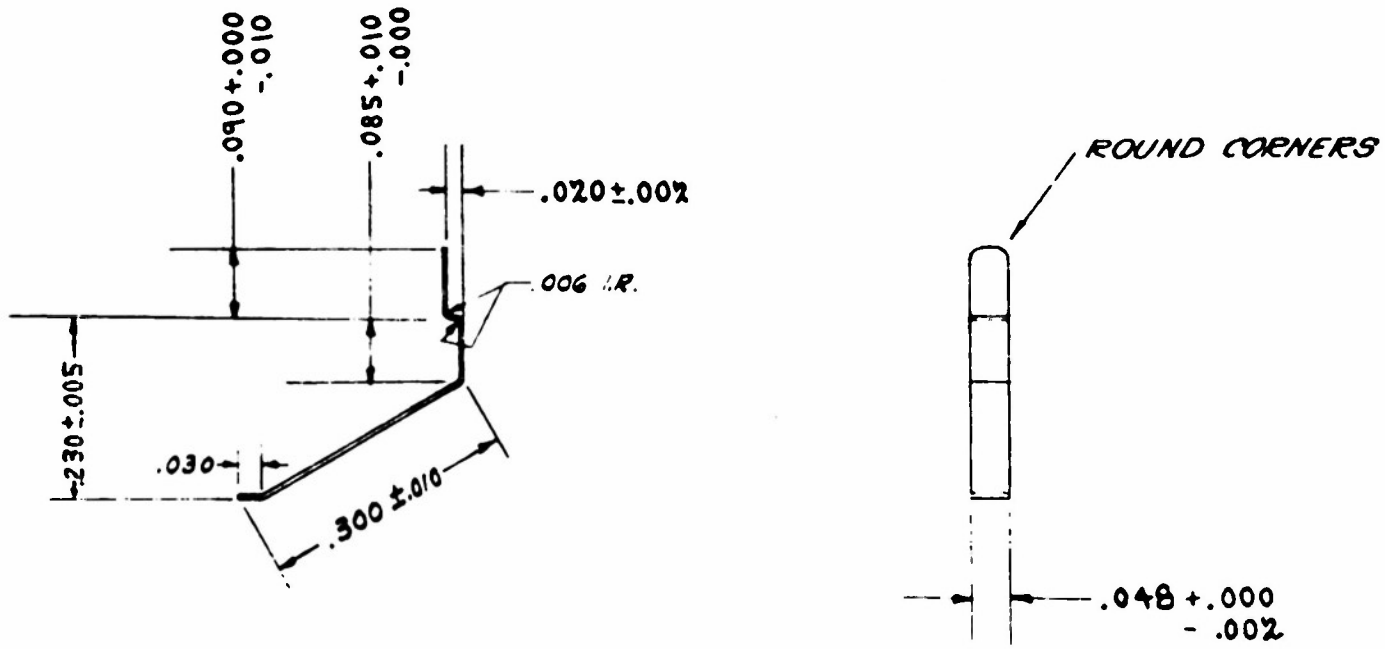

MATERIAL: .004 SPRING TEMPERED
STAINLESS STEEL #305

NATIONAL UNION RADIO CORPORATION - RESEARCH DIVISION - 350 SCOTLAND ROAD, ORANGE, N. J.

Figure No. 16

Date	RECORD OF CHANGES
12-13-50	.048 WAS .049
1-8-51	.300 WAS .400
1-6-51	ADDED .006 I.R. & .230

Originally Designed For Tube Type:

Underlined Dimensions are Not to Scale
UNLESS OTHERWISE SPECIFIED.
DIMENSIONS ARE IN INCHES
All Parts Must Be Free From Burrs.
True Centers Within .001 of Center Line
Unless Otherwise Specified, Tolerances
Are Decimal Dimensions ± 5% or ± .005" Whichever is Smaller.
Fractional Dimensions ± .015"
Angles ± ½°

MAIN TITLE: SUPPORT SPRING

SUB TITLE

Supersedes

Scale: 4:1

Drawn: Date 11-30-50

Appd. Date

Traced Date

Dwg No A-2163-1-3C

Checked Date

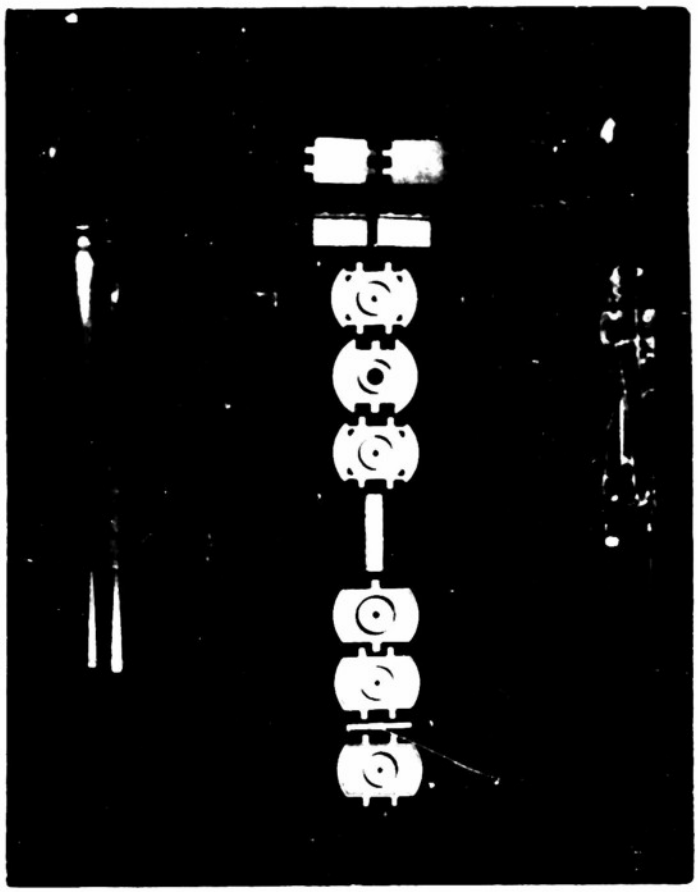

FIG. 17 TUBE COMPONENTS AND GUN

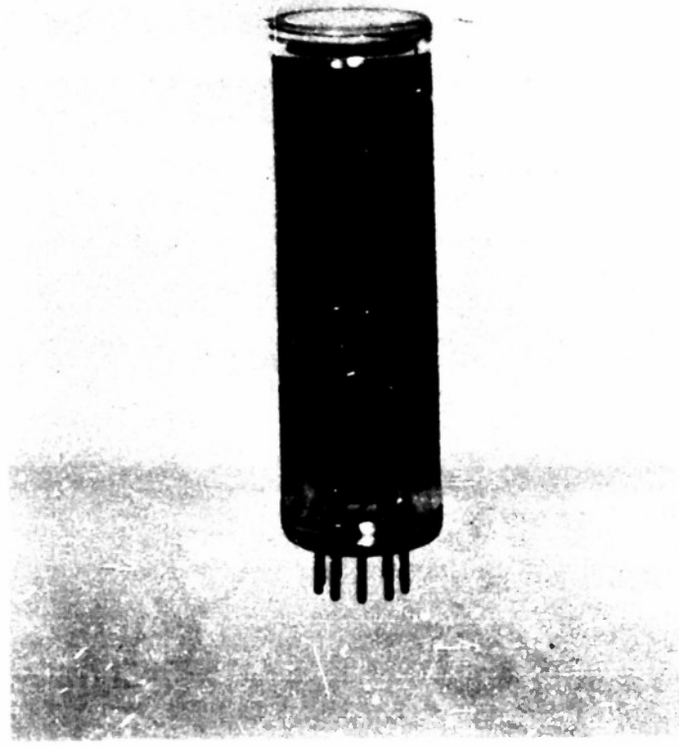

FIG. 18 FINISHED TUBE

A-2163-1-25

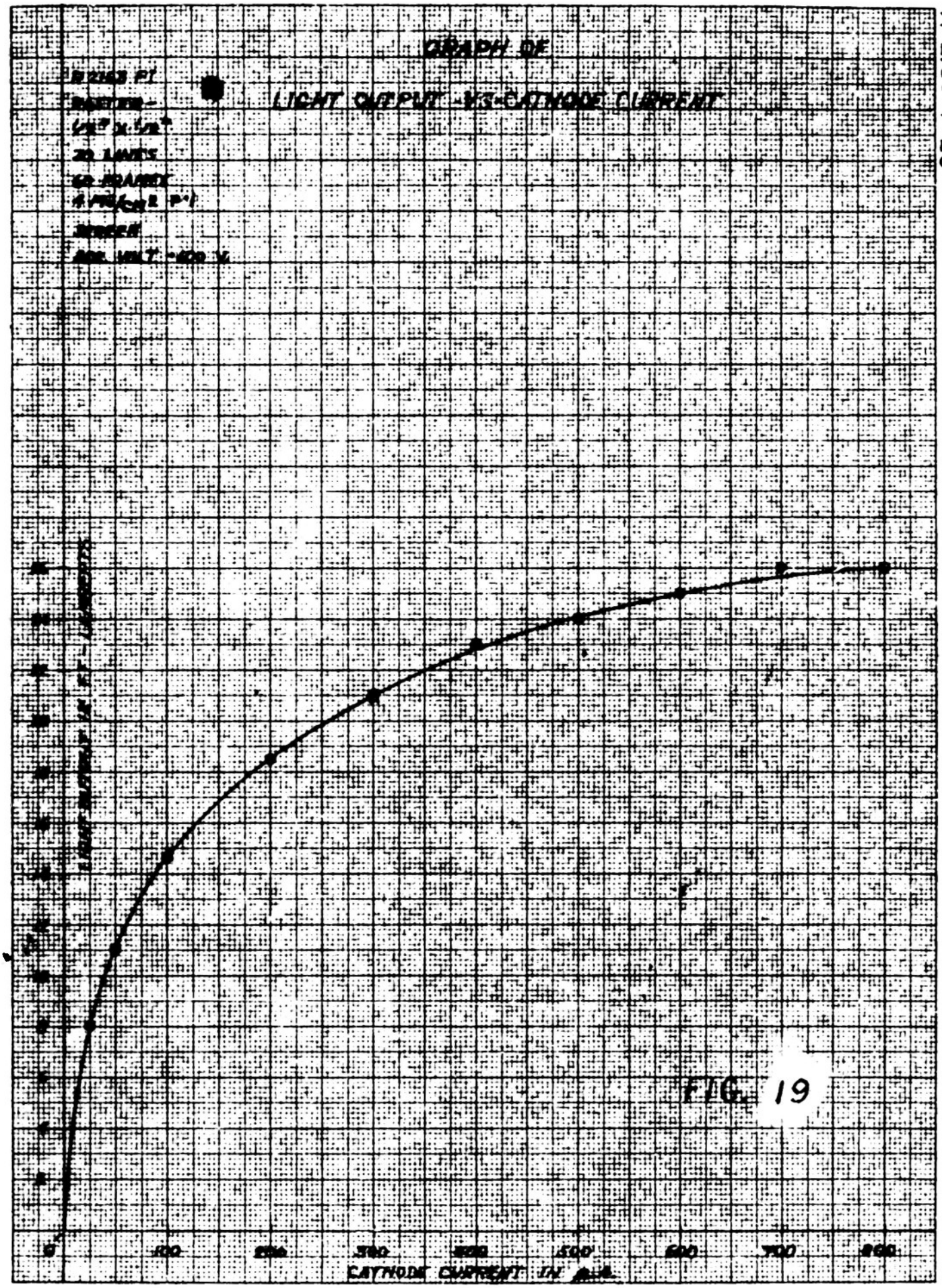

FIG. 19

359-14 KEUFFEL & ESSER CO.
Millimeters, 6 mm. lines accented, cm. lines heavy.

A-2163-1-27
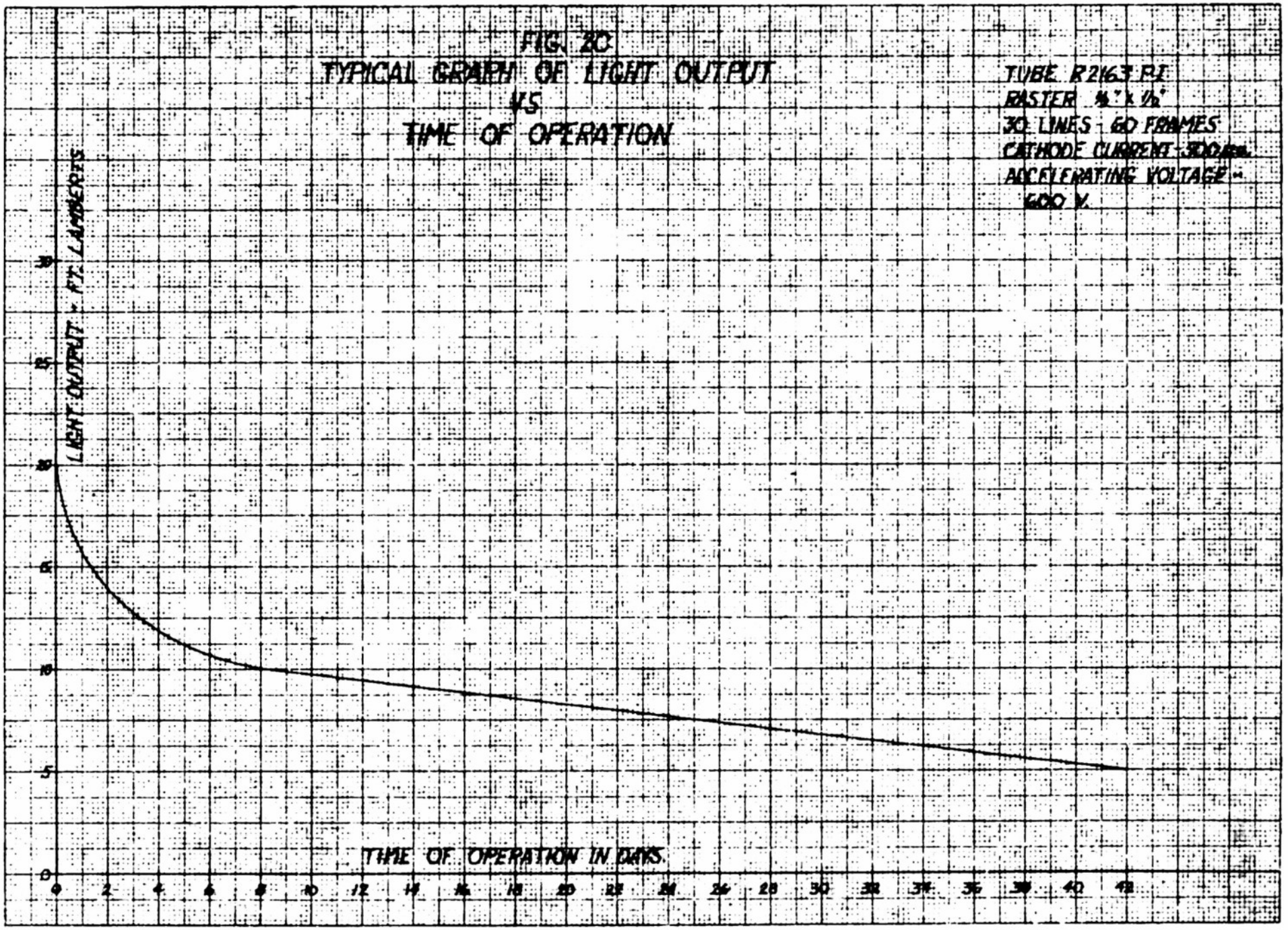
359-14 KEUFFEL & ESSER CO.
Millimeters, 5 mm. lines accented, cm. lines heavy.