THIS REPORT HAS BEEN DECLASSIFIED AND CLEARED FOR PUBLIC RELEASE.

DISTRIBUTION A
APPROVED FOR PUBLIC RELEASE;
DISTRIBUTION UNLIMITED.

UNCLASSIFIED

AD _____

DEFENSE DOCUMENTATION CENTER

FOR

SCIENTIFIC AND TECHNICAL INFORMATION

CAMERON STATION ALEXANDRIA, VIRGINIA

DOWNGRADED AT 3 YEAR INTERVALS:
DECLASSIFIED AFTER 12 YEARS
DOD DIR 5200.10

UNCLASSIFIED

6110
AD No.
ASTIA FILE COPY

OPERATIONS RESEARCH OFFICE

The Johns Hopkins University

TECHNICAL MEMORANDUM
ORO-T-198

BLAST LOADING of MULTI-STORIED STRUCTURES of FIRMO-VISCOUS TYPE

by

W. H. Hoppmann II N. J. Huffington, Jr.

Received: 7 July 1952

Operating Under Contract with the

DEPARTMENT OF THE ARMY

THIS IS A WORKING PAPER

presenting the considered results of study by the ORO staff member responsible for its preparation. The findings and analysis are subject to revision as may be required by new facts or by modification of basic assumptions. Comments and criticism of the contents are invited. Remarks should be addressed to:

The Director
Operations Research Office
The Johns Hopkins University
6410 Connecticut Avenue
Chevy Chase, Maryland

ORO abstract

BLAST LOADING OF MULTI-STORIED STRUCTURES OF FIRMO-VISCOUS TYPE

by

W. H. Hoppmann II
N. J. Huffington, Jr.

This study is the second in a general analytical investigation of the blast loading of structures. Previously, the various elements of the problem were enumerated and discussed. Here, analyses are presented of the deformation of two types of structures assumed to have internal resistance of the firmo-viscous type and to be subjected to side blast loading. The first is a multi-storied building consisting of a series of massive floors each of which is supported atop shear frames connecting the successive floors. The second is a pile of rigid blocks cemented together, intended to simulate massive blocks of masonry attached to each other by a viscous material. Numerical examples illustrating the theory are treated. This study indicated that:

- The type of analysis presented may be of value in predicting damage caused by blast against a multi-storied building or similar structure.
- There is a need for more reliable information on structural damping.

abstract taken by _____ date _____

Abstract taken from: ORO-T-198
Copy 94 of 250
(viii + 18pp., 9 Figs.)
Received: 7 July 1952
Project: ATTACK

OPERATIONS RESEARCH OFFICE — The Johns Hopkins University
OPERATING UNDER CONTRACT WITH THE DEPARTMENT OF THE ARMY

Technical Memorandum ORO-T-198

BLAST LOADING of MULTI-STORIED STRUCTURES of FIRMO-VISCOUS TYPE

by

W. H. Hoppmann II N. J. Huffington, Jr.

Project
ATTACK

Received:
7 July 1952

OPERATIONS RESEARCH OFFICE
The Johns Hopkins University Chevy Chase, Maryland

Copy 84 of 250

CONTENTS

	Page
ABSTRACT	iii
SUMMARY Problem—Facts—Discussion—Conclusions	1
INTRODUCTION	3
SIDE BLAST LOADING OF A MULTI-STORIED STRUCTURE	5
BLAST LOADING OF CEMENTED RIGID BLOCKS	12
DISCUSSION AND CONCLUSIONS	17
BIBLIOGRAPHY	18

SUMMARY

PROBLEM

To analyze dynamically the deformation of two types of structures which are assumed to have internal resistance of the firmo-viscous type and to be subjected to side blast loading.

FACTS

This study is the second in a general analytical investigation of the blast loading of structures. Previously, the various elements of the problem were enumerated and discussed. Among these were stress-strain laws, including damping. An illustrative problem of internal forces was analyzed. The dynamical analysis, however defective, is superior to surmises of structural damage based on statical analysis only and is amenable to simple numerical calculation.

DISCUSSION

In various tall buildings the resistance to applied loads may be essentially of a shear type. Also, there may be a viscous element in the total internal resistance. A method for analyzing these cases is presented. A structure is supposed subjected to side blast of the type described in "The Effects of Atomic Weapons" (3). This structure is representable as a series of rigid masses supported by columns which are not cross-braced. Another structural model of considerable interest is that of a vertical system of rigid masses acted upon by external impulsive forces and coupling forces which are internal to the structure. This model is especially applicable to structures composed of massive blocks of masonry cemented together; it also has application to buildings for which the mass may reasonably be assumed to be concentrated at floor levels. The latter application was suggested in "The Effects of Atomic Weapons" (3) and was used earlier for a building considered as a two-degree-of-freedom system subjected to earthquake motions.

CONCLUSIONS

1. The type of analysis presented is considered to be of value in predicting damage caused by blast against a multi-storied building or similar structure. This point of view is advanced despite obvious defects in idealizations of the type involved.

2. The method of treating shear-frame building may be utilized in the analysis of similar structural units occurring in equipment and machines subjected to dynamic loads.

However, it will still be necessary to determine suitable stress-strain laws in each particular case of interest.

3. Investigations involving the firmo-viscous hypothesis emphasize the need for more reliable information on structural damping. Considerable effort to study the use of damping laws in structural analysis seems to be warranted at the present time.

INTRODUCTION

In a previous paper (2) the various elements of the problem of blast loading of structures were enumerated and discussed. Among these were stress-strain laws, including damping. Also, in connection with an illustrative problem which was solved it was noted that the formal mathematical description and solution might represent a case in which resisting forces were of the "perfectly plastic" type or equally well a case in which the resisting forces were of the Coulomb frictional type. While the mathematical equations describing these two cases are identical the physical reality considered is different. In the one the resisting force is produced by the plastic deformation of a coupling material between the successive blocks composing the idealized structure. In the other case the resisting force is thought of as produced by the rubbing together of two adjacent surfaces. The first case is a modification of that treated in "The Effects of Atomic Weapons" (3).

Many other kinds of internal resistance are treated in rheology (4) which is the science of the deformation and flow of matter. Some of the laws of resistance are shown in Fig. 1. They are represented on three axes representing the shearing stress τ, the shearing strain γ, and the time rate of change of shearing strain $\dot{\gamma}$, respectively. The equations corresponding to the diagrams are also given. The resistance law shown in Fig. 1(c) is the one utilized in the previously mentioned paper (2). The one corresponding to the Voigt (5) or Kelvin (4) solid is used in the present paper. This model has been used considerably in structural analysis in the past (6). It may be considered to describe a damping force in the case of a vibrating body or simply as a distortional rate resistance if there is no noticeable restoring force. While the law indicates too severe damping in the higher modes of vibration of a structure (6) it still may give useful results in the analysis of some vibrating concrete structures. Also, it may be useful in predicting damage in structures which are subjected to forces so large that the elastic restoring forces may be neglected. The general dynamical analysis in this latter case is amenable to reasonably simple numerical calculation. This dynamical analysis, however defective, is surely superior to surmises of structural damage based on statical analysis only.

In various tall buildings the resistance to applied loads may be essentially of a shear type. Also, there may be a viscous element in the total internal resistance. A method for analyzing these cases is presented.

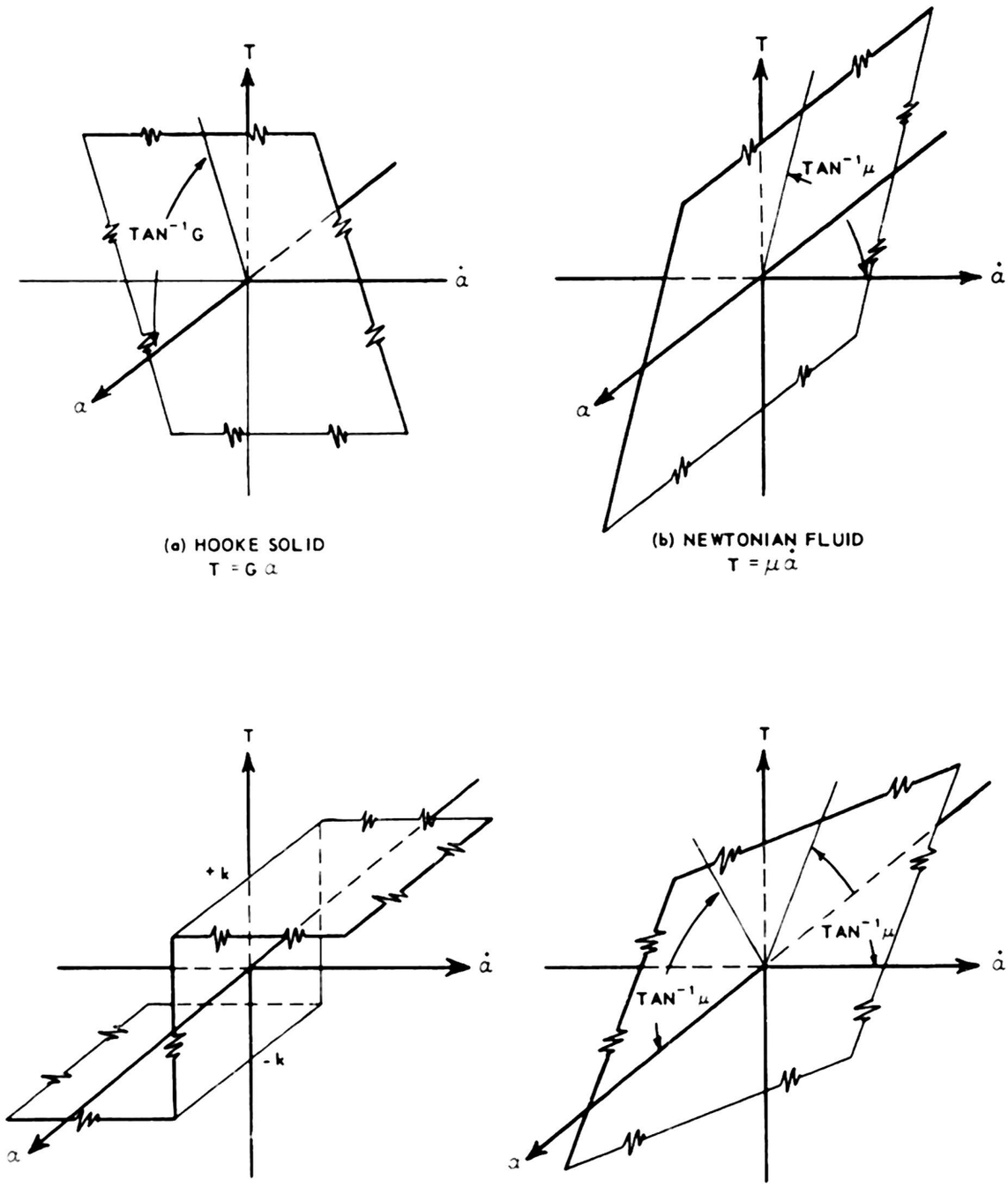
T
TAN⁻¹G
α̇
α
(a) HOOKE SOLID
T = G α
T
TAN⁻¹μ
α̇
α
(b) NEWTONIAN FLUID
T = μ α̇
T
+k
-k
α̇
α
(c) ST. VENANT BODY
+k for α̇ > 0
T = T(p) " α̇ = 0
-k " α̇ < 0
T
TAN⁻¹μ
TAN⁻¹μ
α̇
α
(d) VOIGT or KELVIN SOLID
T = G α + μ α̇

Fig. 1

SIDE BLAST LOADING OF A MULTI-STORIED STRUCTURE

A structure is supposed subjected to side blast of the type described in "The Effects of Atomic Weapons" (3). This structure is representable as a series of rigid masses supported by columns which are not cross-braced. (See Fig. 2.)

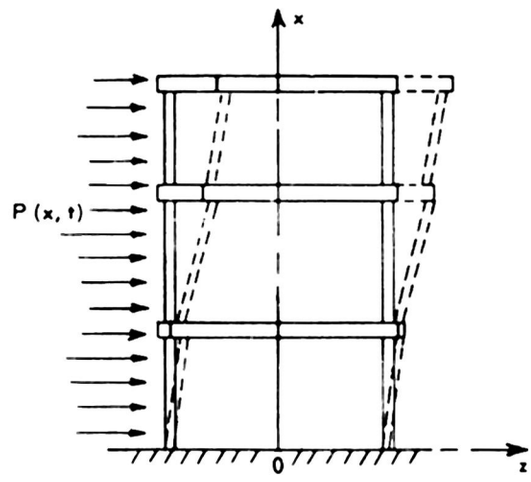

Fig. 2

Deformations are of the shear rather than of the bending type. This structure is thought of as a uniform solid with distributed mass and shear resistance as suggested by M. Biot (1). The mass density, effective section area, and shear modulus are averaged quantities. An element of such an idealized solid is shown in deformed position in Fig. 3. The shear frames deform so that

$$\gamma = \frac{\partial w}{\partial x},$$

where w = displacement in transverse direction.

Biot assumed the stress-strain law to be that of the Hooke solid:

$$\tau = G\gamma,$$

where the shear modulus G is assumed to be an effective constant throughout the length.

On this basis the equation of motion can be written in the usual fashion for a one-dimensional shear wave:

$$\frac{G}{\rho}\frac{\partial^2 w}{\partial x^2} = \frac{\partial^2 w}{\partial t^2}, \tag{1}$$

where ρ = average mass per unit volume.

The Biot derivation was intended for cases in which the excitation of the structure was caused by earthquake movement of the ground. Now if a blast load $P(x,t)$, as shown in Figs. 2–3, acts on the structure and the stress-strain law is that of the firmo-viscous solid (7), Fig. 1(d), expressed analytically as

$$\tau = G\gamma + \mu\dot{\gamma},$$

then the equation of motion readily becomes

$$\frac{G}{\rho}\frac{\partial^2 w}{\partial x^2} + \frac{\mu}{\rho}\frac{\partial^3 w}{\partial x^2\,\partial t} + \frac{P(x,t)}{\rho A} = \frac{\partial^2 w}{\partial t^2},$$

where μ = coefficient of viscous resistance (assumed constant)

A = effective section area in shear (assumed constant).

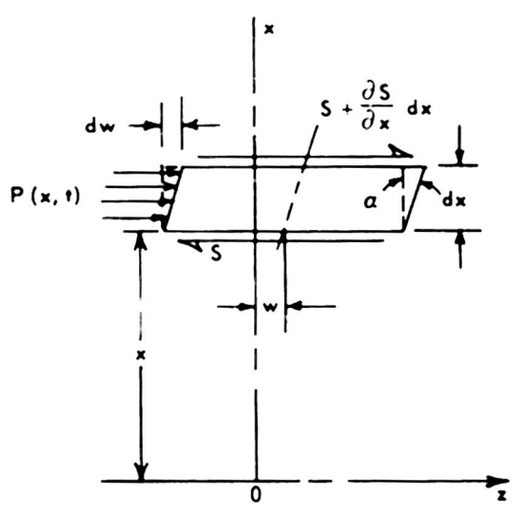

Fig. 3

The desired solution of the blast loading problem will be a displacement function $w(x,t)$ which satisfies Eq. 1, the boundary conditions

$$w = 0 \quad \text{at} \quad x = 0$$

$$AG\frac{\partial w}{\partial x} + \mu A\frac{\partial^2 w}{\partial x\,\partial t} = 0 \quad \text{at} \quad x = l \tag{2}$$

(where l is height of building), and the initial conditions

$$w(x,0) = 0, \quad \dot{w}(x,0) = 0 \tag{3}$$

for a structure which is at rest before the blast loading.

By separation of variables and application of the boundary conditions of Eq. 2 the transcendental frequency equation is found to be

$$\cos \frac{pl}{a} = 0,$$

where $a = \sqrt{\frac{G}{\rho}}$.

This equation is satisfied by the roots

$$p_n = \frac{n\pi a}{2l},$$

where $n = 1, 3, 5, \ldots$.

Then the solution of Eq. 1 will have the form

$$W = \sum_{n=1,3,5}^{\infty} q_n(t) \cdot \sin \frac{n\pi x}{2l}, \tag{4}$$

in which the functions $q_n(t)$ may be found by use of the Lagrangian method (8). This involves computing the kinetic energy T, the potential energy V, the Rayleigh dissipation function F (9), and the generalized force Q_n, which have the values:

$$T = \frac{\rho A}{2} \int_0^l \dot{w}^2 \, dx = \frac{\rho A l}{4} \sum_{n=1,3,5}^{\infty} \dot{q}_n^2$$

$$V = \frac{AG}{2} \int_0^l \left(\frac{\partial w}{\partial x}\right)^2 dx = \frac{\pi^2 AG}{16l} \sum_{n=1,3,5}^{\infty} n^2 q_n^2$$

$$F = -\frac{\mu A}{2} \int_0^l \frac{\partial^3 w}{\partial x^2 \, \partial t} \dot{w} \, dx = \frac{\pi^2 \mu A}{16l} \sum_{n=1,3,5}^{\infty} n^2 \dot{q}_n^2$$

$$Q_n = f(t) \int_0^l p(x) \sin \frac{n\pi x}{2l} \, dx,$$

assuming

$$P(x,t) = p(x) \cdot f(t).$$

Substituting the values of T, V, and F in Lagrange's equations

$$\frac{d}{dt}\left(\frac{\partial F}{\partial \dot{q}_n}\right) + \frac{\partial V}{\partial q_n} + \frac{\partial F}{\partial \dot{q}_n} = Q_n,$$

the differential equations of motion for each normal coordinate are:

$$\ddot{q}_n + \frac{n^2\pi^2}{4l^2} \cdot \frac{\mu}{\rho} \dot{q}_n + \frac{n^2\pi^2}{4l^2} \cdot \frac{G}{\rho} q_n = \frac{2}{\rho A l} Q_n, \tag{5}$$

where ($n = 1, 3, 5, \ldots$).

The solutions of these independent ordinary differential equations, satisfying initial conditions in Eq. 3, may be easily obtained by use of Laplace Transforms (10). Then, the displacement function for the duration of the blast pulse is:

$$w(x,t) = \sum_{n=1,3,5}^{\infty} \frac{1}{\xi_n} \sin \frac{n\pi x}{2l} \int_0^t H_n(\tau) e^{-\delta_n(t-\tau)} \sin \xi_n(t - \tau) \, d\tau, \tag{6}$$

where $H_n(\tau) = \frac{2}{\rho A l} f(\tau) \int_0^l p(x) \sin \frac{n\pi x}{2l}\, dx$

$$\delta_n = \frac{n^2\pi^2}{8\rho} \cdot \frac{\mu}{l^2}$$

$$\xi_n = \sqrt{p_n^2 - \delta_n^2}$$

If the blast pulse is of duration t_1 and $w(x,t_1)$, $\dot{w}(x,t_1)$ are the displacements and velocities, respectively, at $t = t_1$, then the solution for $t > t_1$ is:

$$w(x,t) = \frac{2}{l} \sum_{n=1,3,5}^{\infty} e^{-\delta_n(t-t_1)} \left[\left\{ \left(\sin \xi_n t_1 + \frac{\delta_n}{\xi_n} \cos \xi_n t_1 \right) \phi + \frac{\cos \xi_n t_1}{\xi_n} \cdot \psi \right\} \sin \xi_n t \right.$$
$$\left. + \left\{ \left(\cos \xi_n t_1 - \frac{\delta_n}{\xi_n} \sin \xi_n t_1 \right) \phi - \frac{\sin \xi_n t_1}{\xi_n} \cdot \psi \right\} \cos \xi_n t \right] \sin \frac{n\pi x}{2l}, \quad (7)$$

where $\phi = \int_0^l w(x,t_1) \sin \frac{n\pi x}{2l}\, dx$

$$\psi = \int_0^l \dot{w}(x,t_1) \sin \frac{n\pi x}{2l}\, dx.$$

Equation 6 has the form of a transient forced vibration with damping while Eq. 7 represents a damped free vibration. Owing to the presence of the elastic restoring force the motion of the structure following the pulse will consist of a damped oscillation about the original configuration of equilibrium.

It is interesting to examine two special limiting cases of the preceding solution. The first case is that of a structure for which the internal viscous resistance is so small that it may be neglected; i.e., effectively a Hooke solid. The solution then becomes:

$$w(x,t) = \sum_{n=1,3,5}^{\infty} \frac{1}{p_n} \sin \frac{n\pi x}{2l} \int_0^t H_n(\tau) \sin p_n(t-\tau)\, d\tau \quad \text{for } 0 \leqq t \leqq t_1 \quad (8)$$

$$w(x,t) = \frac{2}{l} \sum_{n=1,3,5}^{\infty} \left[\left(\phi \sin p_n t_1 + \frac{\psi}{p_n} \cos p_n t_1 \right) \sin p_n t + \left(\phi \cos p_n t_1 - \frac{\psi}{p_n} \sin p_n t_1 \right) \cos p_n t \right] \sin \frac{n\pi x}{2l}$$
$$\text{for } t \geqq t_1. \quad (9)$$

Although this solution represents an undamped vibration of infinite duration, the counterpart of which is not found in physical structures, it may produce valuable information, particularly in the cases of brittle structures or structures with a definite yield point. For such structures the critical displacement or stress is known. The solution will reveal whether the critical value is reached, and if so, the time at which this occurs, as well as fully describing the motion prior to fracture or yielding.

If the solution is further particularized to the case of the specific blast pulse

$$P(x,t) = P_0 e^{-\alpha t}$$

Eq. 8 reduces to

$$w(x,t) = \sum_{n=1,3,5}^{\infty} \frac{2P_0 a}{PAlp_n(\alpha^2 + p_n^2)} \left\{ e^{-\alpha t} - \cos p_n t + \frac{\alpha}{p_n} \sin p_n t \right\} \sin \frac{n\pi x}{2l}.$$

Although theoretically this pulse is of infinite duration, its effect on the structure soon becomes negligible. For normal values of α the exponential term rapidly becomes

negligible as t increases, leaving what is sensibly a free vibration of determinate amplitude.

The other limiting case is that of a structure of which the elastic restoring forces are comparatively so weak that they may be neglected. This amounts to setting the shear modulus G equal to zero, in which event the structural resistance law becomes that of the Newtonian fluid, Fig. 1(b). For this case the general Eq. 6 and 7 reduce to:

$$w(x,t) = \sum_{n=1,3,5}^{\infty} \frac{1}{2\delta_n} \sin \frac{n\pi x}{2l} \int_0^t H_n(\tau)\{1 - e^{-2\delta_n(t-\tau)}\}\, d\tau \quad \text{for } 0 \leqq t \leqq t_1 \tag{10}$$

$$w(x,t) = w(x,t_1) + \sum_{n=1,3,5}^{\infty} \frac{\psi}{\delta_n l} \{1 - e^{-2\delta_n(t-t_1)}\} \sin \frac{n\pi x}{2l} \quad \text{for } t \geqq t_1. \tag{11}$$

As an illustration of the nature of these solutions, consider the blast loading of a structure having the dimensions 75 ft × 75 ft × 100 ft (height) which is located at a distance of 3600 ft from the ground zero of a "nominal" atomic bomb. Then, by approximate methods (3), the impulsive loading function may be estimated to be:

$$P(x,t) = P(t) = \begin{cases} 0 & \text{for } t < 0 \\ 324000\left(1 - \dfrac{t}{0.7}\right)e^{-20t} & \text{for } 0 \leqq t \leqq 0.7 \\ 0 & \text{for } t > 0.7 \text{ sec.,} \end{cases}$$

where the origin for time is taken as the instant when the shock wave reaches the structure. A plot of this loading function is included in Fig. 4. The remaining necessary data were assumed to be: A = 100 sq ft, weight = 322 lb/cu ft, and $P(t)$ = 405,000 lb sec/sq ft.

During the non-zero portion of the pulse the displacement function, obtained by substituting these data in Eq. 10, is

$$w(x,t) = 0.14733 \sum_{n=1,3,5}^{\infty} \frac{1}{n^3} \sin \frac{n\pi x}{2l} \left[\frac{20n^2(n^2-2)te^{-20t} - n^2(13n^2-24)e^{-20t} + 4(7n^2-13)e^{-10n^2t}}{(n^2-2)^2} + 13\right].$$

The displacements of points originally on a vertical line, computed from this solution, are shown graphically in Fig. 4 for successive instants of time during the pulse. Also shown is the velocity-time variation of representative points on the structure. It may be seen that the structure is substantially at rest by the end of the pulse, making unnecessary the determination of a separate solution for $t > t_1$. This feature is a result of the particular parameters chosen for this example, and generally would not be the case. The limiting displacement, which for all practical purposes is reached during the pulse, is:

$$w = 1.916 \sum_{n=1,3,5}^{\infty} \frac{1}{n^3} \sin \frac{n\pi x}{2l}.$$

Although theoretically the velocities do not become identically zero in finite time for Eqs. 10 and 11, the presence of internal friction in real materials would suffice to bring the structure to rest when the velocities become sufficiently small.

Attention should be called to the basic difference between this solution and that for the preceding cases. In the absence of elastic restoring forces there is no vibration, and permanent deformation of magnitude dependent upon the applied blast pulse occurs.

In the preceding analysis it was assumed that the coefficients G, ρ, μ, A were constants throughout the structure. Solutions may be obtained for more complicated cases where these coefficients vary with the longitudinal dimension x by use of numerical methods.

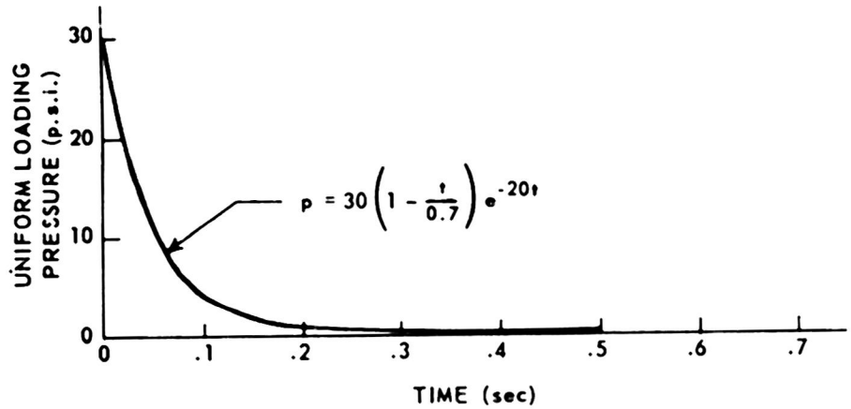

(a)

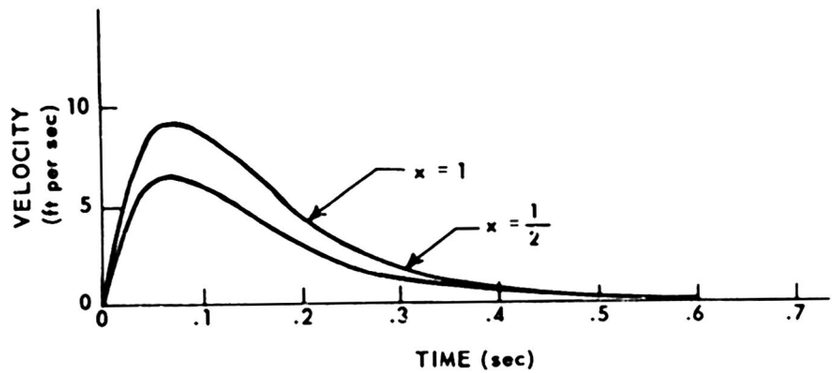

(b)

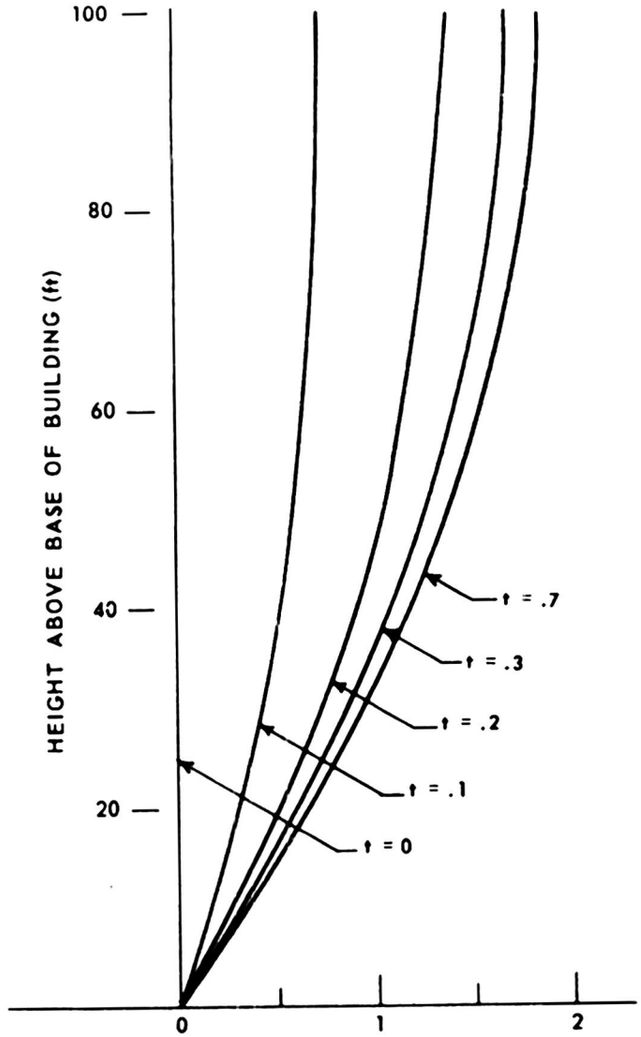

(c) HORIZONTAL DISPLACEMENT OF VERTICAL AXIS OF BUILDING (feet)

Fig. 4

When the coefficients are functions of the displacement or its derivatives one encounters an important class of non-linear problems, which are beyond the scope of this study. However, a treatment will now be given of an important technological case in which the viscosity is distributed throughout the height of the structure in a discrete or discontinuous manner. In this case, the structure is also assumed to be rigid except at the interfaces of adjoining rigid blocks.

BLAST LOADING OF CEMENTED RIGID BLOCKS

Another structural model of considerable interest is that of a vertical system of rigid masses M acted upon by external impulsive forces P and coupling forces F which are internal to the structure, as shown in Fig. 5. In this model it is assumed that the coupling forces are transmitted by intervening material of negligible mass. This model is especially applicable to structures composed of massive blocks of masonry cemented together; it also has application to buildings for which the mass may reasonably be assumed to be concentrated at floor levels. The latter application was suggested in Appendix A of Ref. 3 and was used earlier by Biot (11) for a building considered as a two-degree-of-freedom system subjected to earthquake motions.

As a result of the representation of the structure as a system with a finite number of degrees-of-freedom the equations of motion are n ordinary differential equations of the form

$$M_r\ddot{w}_r - F_{r-1} + F_r = P_r(t), \tag{12}$$

where $r = 1,2,3, \ldots, n$.

In the notation employed (Fig. 5), the subscript letters identify a particular mass and the coupling material immediately below it. The displacement functions $w_1(t)$, $w_2(t), \ldots, w_n(t)$ are used to define the motions of the n masses. The sign convention for positive forces and displacements is that indicated in Fig. 5. The boundary conditions for this structure may be expressed as:

$$F_0 \equiv 0, \quad w_{n+1} \equiv 0.$$

The coupling forces F may be of many types, some of the most important being those based on the resistance laws depicted in Fig. 1. In the case where the coupling forces result from the elastic shear deformation of the coupling material, Eq. 12 becomes:

$$M_r\ddot{w}_r - \frac{A_{r-1}G_{r-1}}{h_{r-1}} w_{r-1} + \left(\frac{A_{r-1}G_{r-1}}{h_{r-1}} + \frac{A_rG_r}{h_r}\right) w_r - \frac{A_rG_r}{h_r} w_{r+1} = P_r(t), \tag{13}$$

where $r = 1,2, \ldots, n$

A = effective shearing area of designated coupling material

G = effective shear modulus of designated coupling material

h = height of designated coupling material

The solution of Eq. 13 may be obtained by any of the standard methods, such as use of the operational calculus, at least for a specific problem.

This solution will have the form of an undamped vibration of each element of the system. The remarks made pertaining to the value of the solution for the undamped continuous structure apply equally well to this solution.

The case of the discrete system with coupling forces of the St. Venant body type (Coulomb friction or "perfectly plastic material") has been considered in a previous paper (2) and also examined with greater thoroughness in an unpublished essay (12).

Coupling forces of the viscous type may also occur, as exemplified by the case of the structure composed of massive blocks cemented together by an essentially viscous material. For such structures Eq. 12 becomes:

$$M_r\ddot{w}_r - \frac{\mu_{r-1}A_{r-1}}{h_{r-1}}\dot{w}_{r-1} + \left(\frac{\mu_{r-1}A_{r-1}}{h_{r-1}} + \frac{\mu_r A_r}{h_r}\right)\dot{w}_r - \frac{\mu_r A_r}{h_r}\dot{w}_{r+1} = P_r(t), \tag{14}$$

where $r = 1,2,3, \ldots, n$.

Solutions of Eq. 14 may be easily obtained for small values of n; using the notation

$$C_r = \frac{\mu_r A_r}{h_r},$$

where $r = 1,2,3, \ldots, n$, the solution for the single-degree-of-freedom system is:

$$w_1(t) = \frac{1}{C_1}\int_{t_0}^{t} P_1(\tau)\{1 - e^{-\frac{C_1}{M_1}(t-\tau)}\}\,d\tau + w_1(t_0) + \frac{M_1}{C_1}\{1 - e^{-\frac{C_1}{M_1}(t-t_0)}\}\dot{w}_1(t_0), \tag{15}$$

and for the two-degree-of-freedom system is:

$$\begin{aligned} w_1(t) = \int_{t_0}^{t}\Bigg[&\left\{\frac{C_1 + C_2}{C_1C_2} + \frac{1}{2b}\left(\frac{1}{M_1} + \frac{(a-b)(C_1+C_2)}{C_1C_2}\right)e^{(a+b)(t-\tau)}\right. \\ &\left. - \frac{1}{2b}\left(\frac{1}{M_1} + \frac{(a+b)(C_1+C_2)}{C_1C_2}\right)e^{(a-b)(t-\tau)}\right\}P_1(\tau) \\ &+ \frac{1}{2bC_2}\{2b + (a-b)e^{(a+b)(t-\tau)} - (a+b)e^{(a-b)(t-\tau)}\}P_2(\tau)\Bigg]d\tau + w_1(t_0) \\ &+ \left\{M_1\left(\frac{C_1+C_2}{C_1C_2}\right)\dot{w}_1(t_0) + \frac{M_2}{C_2}\dot{w}_2(t_0)\right\}\left\{1 - \frac{1}{2}\left(1 - \frac{a}{b}\right)e^{(a+b)(t-t_0)} - \frac{1}{2}\left(1 + \frac{a}{b}\right)e^{(a-b)(t-t_0)}\right\} \\ &+ \frac{\dot{w}_1(t_0)}{2b}\{e^{(a+b)(t-t_0)} - e^{(a-b)(t-t_0)}\} \end{aligned} \tag{16}$$

$$\begin{aligned} w_2(t) = \frac{1}{2bc_2}\int_{t_0}^{t}\Bigg[&\{2b + (a-b)e^{(a+b)(t-\tau)} - (a+b)e^{(a-b)(t-\tau)}\}P_1(\tau) \\ &+ \left\{2b + \left(\frac{C_2}{M_2} + a - b\right)e^{(a+b)(t-\tau)} - \left(\frac{C_2}{M_2} + a + b\right)e^{(a-b)(t-\tau)}\right\}P_2(\tau)\Bigg]d\tau \\ &+ w_2(t_0) + \left\{\frac{M_1}{C_2}\dot{w}_1(t_0) + \frac{M_2}{C_2}\dot{w}_2(t_0)\right\}\left\{1 - \frac{1}{2}\left(1 - \frac{a}{b}\right)e^{(a+b)(t-t_0)}\right. \\ &\left. - \frac{1}{2}\left(1 + \frac{a}{b}\right)e^{(a-b)(t-t_0)}\right\} + \frac{\dot{w}_2(t_0)}{2b}\{e^{(a+b)(t-t_0)} - e^{(a-b)(t-t_0)}\}, \end{aligned} \tag{17}$$

where $a = -\dfrac{(M_1 + M_2)C_1 + M_1C_2}{2M_1M_2}$

$$b = \frac{\sqrt{(M_1 + M_2)^2C_1^2 + 2M_1(M_1 - M_2)C_1C_2 + M_1^2C_2^2}}{2M_1M_2}.$$

It frequently happens that the external load function has different analytical definitions for succeeding intervals of time (Fig. 6).

In such cases it is necessary to obtain solutions for each interval, using the final conditions of displacement and velocity for one interval as initial conditions for the next interval. The solutions for one and two degrees-of-freedom are presented in a form

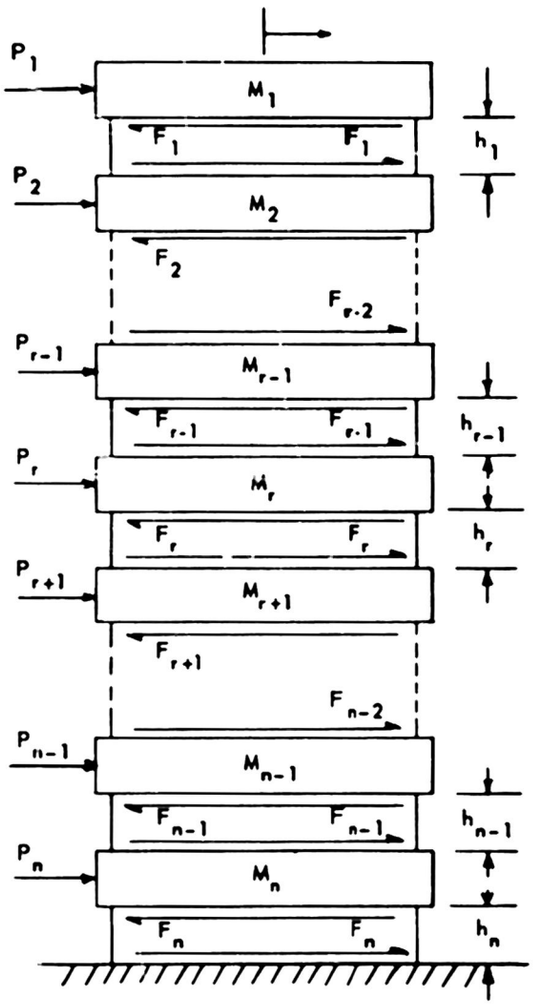

Fig. 5

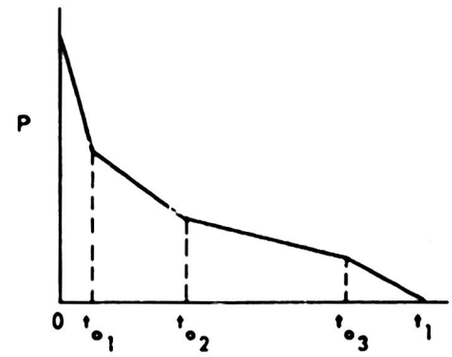

Fig. 6

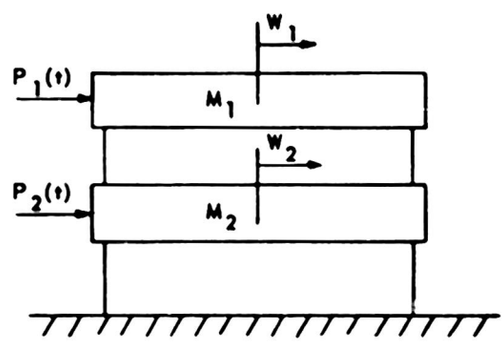

Fig. 7

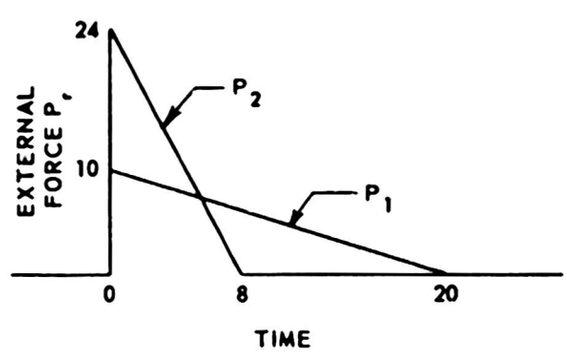

Fig. 8

where initial conditions are specified at $t = t_0$, an arbitrary time, making possible the direct determination of the solution for each interval with respect to the same origin for time. Obvious simplifications can be made when the initial conditions are specified at $t = 0$ or when the initial displacement or velocity is zero. Equations 15, 16, and 17 also give the solution for the period after the impulse has ceased, provided the upper limit of integration is taken to be t_1, where t_1 is the time of the end of the impulse.

As an illustration of the nature of the response of a two-degree-of-freedom system with coupling forces of viscous type, Fig. 7, consider as an example a system having the simple parameters:

$$M_1 = 3 \qquad C_1 = 1$$
$$M_2 = 5 \qquad C_2 = 2,$$

which is subjected to the triangular blast pulses $P_1(t)$, $P_2(t)$ shown in Fig. 8. These pulses may be described analytically by the functions:

$$P_1(t) = \begin{cases} 0 & \text{for } t < 0 \\ 10 - 0.5t & \text{for } 0 \leq t \leq 20 \\ 0 & \text{for } t > 20, \end{cases} \qquad P_2(t) = \begin{cases} 0 & \text{for } t < 0 \\ 24 - 3t & \text{for } 0 \leq t \leq 8 \\ 0 & \text{for } t > 8. \end{cases}$$

Introducing these data into Eq. 16 and 17, the complete displacement-time relations are found to be:

$$\begin{aligned} w_1(t) &= 0 & & t \leq 0 \\ &= 252.56e^{-.1761t} - 3.919e^{-.7673t} - 1.126t^2 + 41.51t - 248.65 & & 0 \leq t \leq 8 \\ &= -5.29e^{-.1761t} + 330.50e^{-.7673t} - 0.376t^2 + 19.00t - 54.39 & & 8 \leq t \leq 20 \\ &= -756.14e^{-.1761t} - 367329e^{-.7673t} + 197.73 & & t \geq 20 \end{aligned}$$

$$\begin{aligned} w_2(t) &= 0 & & t \leq 0 \\ &= 119.26e^{-.1761t} + 4.98e^{-.7673t} - 0.875t^2 + 24.76t - 124.24 & & 0 \leq t \leq 8 \\ &= -2.529e^{-.1761t} - 424.52e^{-.7673t} - 0.125t^2 + 6.75t + 2.60 & & 8 \leq t \leq 20 \\ &= -356.75e^{-.1761t} + 486494e^{-.7673t} + 97.92 & & t \geq 20 \end{aligned}$$

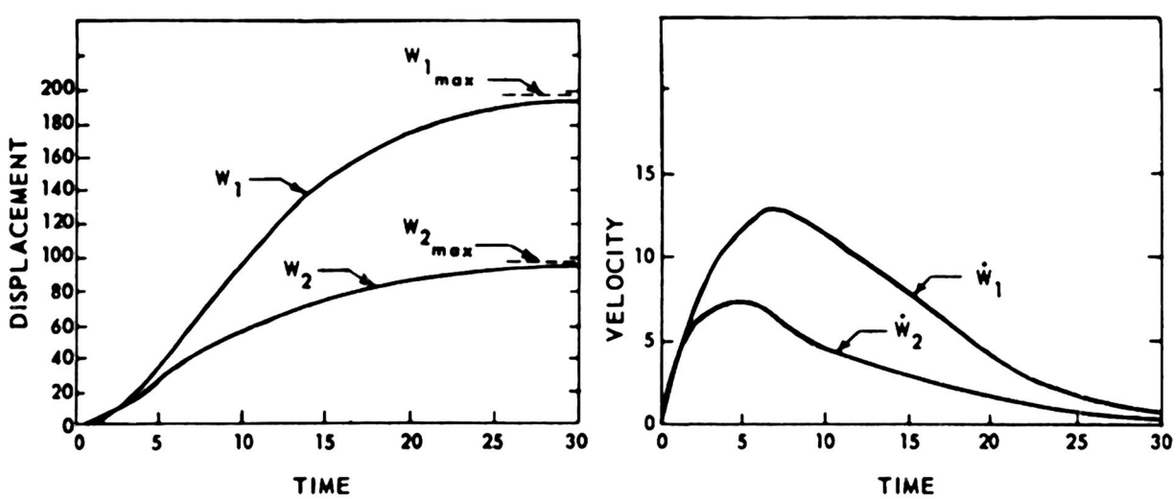

Fig. 9

These displacement-time functions, and the velocity-time functions which may be easily obtained by differentiation, are presented graphically in Fig. 9. The maximum displacements shown in this figure are approached asymptotically as time increases indefinitely. They serve as an upper bound which would be reached eventually if there were no other resisting forces present. As might be expected, this solution has much in common with that for the continuous structure having internal viscous resistance alone, Fig. 4. It is also interesting to compare the results of Fig. 9 with those presented in "Blast Loading of Structures" (2), in which an example with the same parameters was solved for a system having the resistance law of the modified St. Venant body, Fig. 1(c).

DISCUSSION AND CONCLUSIONS

The type of analysis presented in this paper is considered to be of value in predicting damage caused by blast against a multi-storied building or similar structure. This point of view is advanced in spite of obvious defects that exist in idealizations of the type involved. As a starting point some such analysis is essential. Statical analysis gives practically no useful information about dynamic strains and deflections. Also, any analysis which assumes that the structure is rigid during the first portion of the time of application of the load is misleading. This assumption is sometimes tempting in order to apply simplified theories of plasticity. An essential difficulty in such approach is the lack of knowledge of the distribution of momenta caused by the first phase of the loading.

The Biot method (11) of treating shear-frame buildings may be utilized in the analysis of similar structural units occurring in equipment and machines subjected to dynamic loads. However, in order to make the analysis more realistic it will be necessary to determine suitable stress-strain laws in the particular cases of interest.

Investigations involving the firmo-viscous hypothesis emphasize the need for more reliable information on structural damping. While many tests have been conducted to determine the damping properties of materials the use of damping laws in structural analysis is still in a rather embryonic stage. Considerable effort to remedy this situation seems to be warranted at the present time.

BIBLIOGRAPHY

1. M. Biot. "Theory of Vibration of Buildings During Earthquake," *Zeitschrift für angewandte Mathematik und Mechanik*, 14:216. 1934.
2. W. H. Hoppmann II, and N. J. Huffington, Jr. "Blast Loading of Structures," ORO-T-197, Operations Research Office, The Johns Hopkins University. October, 1952.
3. "The Effects of Atomic Weapons." Atomic Energy Commission, US Government Printing Office. September 1950.
4. Markus Reiner. *Twelve Lectures on Theoretical Rheology*, Lectures IV, VIII, and IX, Interscience Publishers, Inc., New York. 1949.
5. Clarence Zener. *Elasticity and Anelasticity of Metals*, p. 41, The University of Chicago Press, Chicago, Ill. 1948.
6. H. L. Cooper, R. D. Mindlin, and F. W. Stubner. "Response of Damped Elastic Systems to Transient Disturbances," Proceedings of the Society for Experimental Stress Analysis, 5:2:69-87. 1948.
7. A. Nadai. *Theory of Flow and Fracture of Solids*, p. 423, McGraw-Hill Book Company, Inc., New York, N.Y. 1950.
8. S. Timoshenko. *Vibration Problems in Engineering*, 2d Ed., pp. 312-17, D. Van Nostrand Company, Inc , New York, N.Y. 1937.
9. Lord Rayleigh. *The Theory of Sound*, 1:102-103, Dover Publications, New York. 1945.
10. J. L. Barnes, M. F. Gardner. *Transients in Linear Systems*. John Wiley and Sons, Inc., New York, N.Y. 1942.
11. M. Biot. "Analytical and Experimental Methods in Engineering Seismology," Proceedings of the American Society of Civil Engineers, 68:49-69. 1942.
12. N. J. Huffington, Jr. *Structures Subjected to Explosive-Type Loading*, Master's thesis, The Johns Hopkins University, Baltimore, Md. May 1951.