UNCLASSIFIED

AD _____

DEFENSE DOCUMENTATION CENTER

FOR

SCIENTIFIC AND TECHNICAL INFORMATION

CAMERON STATION ALEXANDRIA, VIRGINIA

DOWNGRADED AT 3 YEAR INTERVALS:
DECLASSIFIED AFTER 12 YEARS
DOD DIR 5200.10

UNCLASSIFIED

AD No. 576
ASTIA FILE COPY

NAVORD REPORT 2703

DIELECTRIC FAULT INDICATOR

24 November 1952

U. S. NAVAL ORDNANCE LABORATORY

WHITE OAK, MARYLAND

THIS REPORT HAS BEEN DECLASSIFIED AND CLEARED FOR PUBLIC RELEASE.

DISTRIBUTION A
APPROVED FOR PUBLIC RELEASE;
DISTRIBUTION UNLIMITED.

NAVORD Report 2703

DIELECTRIC FAULT INDICATOR

Prepared by:

E. B. Abrahamson
Electrical Evaluation Division

ABSTRACT: A Dielectric Fault Indicator has been developed which greatly simplifies the dielectric test procedure specified for synchros. This compact test unit should replace previous cumbersome apparatus. It is usable with 60-cycle as well as 400-cycle synchros. The ease of application of the test unit recommends it for production as well as laboratory testing.

U. S. NAVAL ORDNANCE LABORATORY
WHITE OAK, MARYLAND

The Dielectric Fault Indicator described here has proven useful in the type-approval processing of synchros performed at this Laboratory. It is recommended for use in production testing of synchros. The work was performed under Task Number NOL-Re4a-78-1-53; Fire Control Transmitting and Computing Components.

References: (a) MIL-S-16892; Military Specifications, Synchros, 400-Cycle

(b) MIL-S-2335; Military Specifications, Synchros, 60-Cycle

EDWARD L. WOODWARD
Captain, USN
Commander

R. E. Hightower

R. E. HIGHTOWER
By direction

CONTENTS

		Page
A.	Introduction	1
B.	Design of Dielectric Fault Indicator	1
C.	Operating Procedures	2
D.	Conclusions	2

ILLUSTRATIONS

Figure 1.	Dielectric Fault Indicator (Panel View)	3
Figure 2.	Dielectric Fault Indicator (Chasis View)	4
Figure 3.	Circuit of Dielectric Fault Indicator	5

DIELECTRIC FAULT INDICATOR

A. Introduction

1. Military specifications, references (a) and (b), require that all synchros be subjected to a dielectric test. This test is designed to detect faults existing in the dielectric material on the windings of a synchro. In construction the insulation on the wire in the windings sometimes becomes damaged, possibly causing shorted turns. This dielectric test provides a non-distructive indication of shorted windings in the secondary. Twice the rated voltage at twice the rated frequency is impressed upon the primary windings of the synchro with the secondary windings open. Shorted turns in the secondary windings produce torque on the rotor and variations in the primary current as the rotor is turned slowly. To facilitate the performance of this test, a Dielectric Fault Indicator has been developed.

2. In the type approval of synchros, the dielectric test employed an audio oscillator in conjunction with a 50-watt power amplifier and a step-up transformer to obtain the required frequency and voltage. In addition to the power source, an oscilloscope, a variable decade condenser, and two electronic voltmeters were required. This equipment not only occupied excessive laboratory space, but failed to supply sufficient power to energize some synchros at twice the rated voltage.

B. Design of Dielectric Fault Indicator

3. The Dielectric Fault Indicator, which has been constructed, is a compact unit. Only one electronic voltmeter and one oscilloscope are required with the apparatus pictured by Figures 1 and 2, as auxiliary equipment. When energized from a 115-volt 60-cycle power source, the Dielectric Fault Indicator delivers over 70 watts of power at 230 volts 120 cycles. When energized by a 115-volt 400-cycle power source, the tester delivers over 30 watts of power at 230 volts 800 cycles.

4. The circuit of the Dielectric Fault Indicator is shown by Figure 3. Full-wave rectification of the supply voltage provides a double frequency signal. For example, when the power source is 400 cycles, the rectification produces a voltage having an 800 cycle fundamental. The d.c. component of the 800 cycle voltage is dissipated to ground through a resistance, R_1. An inductive coil connected in series with R_1 forms a high impedance to the a.c. component. A decade capacitor connected across the secondary of the output transformer makes possible correction of the power factor of the synchro load, and eliminates unwanted harmonics. Precision one-ohm resistors, R_2 and R_3, provide a means for the measurement of line current or synchro current with one external electronic voltmeter.

C. Operating Procedures

5. To conduct the dielectric test of a synchro with the Dielectric Fault Indicator, one should use the following procedure:

a. Energize the tester from the appropiate power source; i.e., 60-cycle or 400-cycle, 115 volt power.

b. Connect the primary terminals of the synchro to the output of the tester.

c. Connect an electronic voltmeter to the "VT Voltmeter" terminals and an oscilloscope (optional) to the "Oscilloscope" terminals of the tester.

d. Increase the voltage by means of the variac to approximately the rated value of the unit under test.

e. Turn the "Current Switch" to the "Line" position. Vary the decade condenser until minimum current is indicated by the electronic voltmeter.

f. Increase the voltage slowly, as indicated by the panel voltmeter, to twice the rated value of the unit under test. Maintain the voltage at that value for one minute.

g. Turn the "Current Switch" to the "Synchro" position and then rotate the rotor of the unit under test at least one revolution at a rate less than 2 rpm.

h. Indication of insulation breakdown will be exhibited by a tendency of the rotor to seek a preferred position, or by sporadic changes in the primary current.

i. On completion of observations, one should decrease the voltage on the synchro, by means of the variac, to zero volts before turning off the power.

D. Conclusions

6. The Dielectric Fault Indicator is a useful device for conducting the test required by Military Specifications. The simplicity and compactness of this test device recommend it for production as well as laboratory testing of synchros.

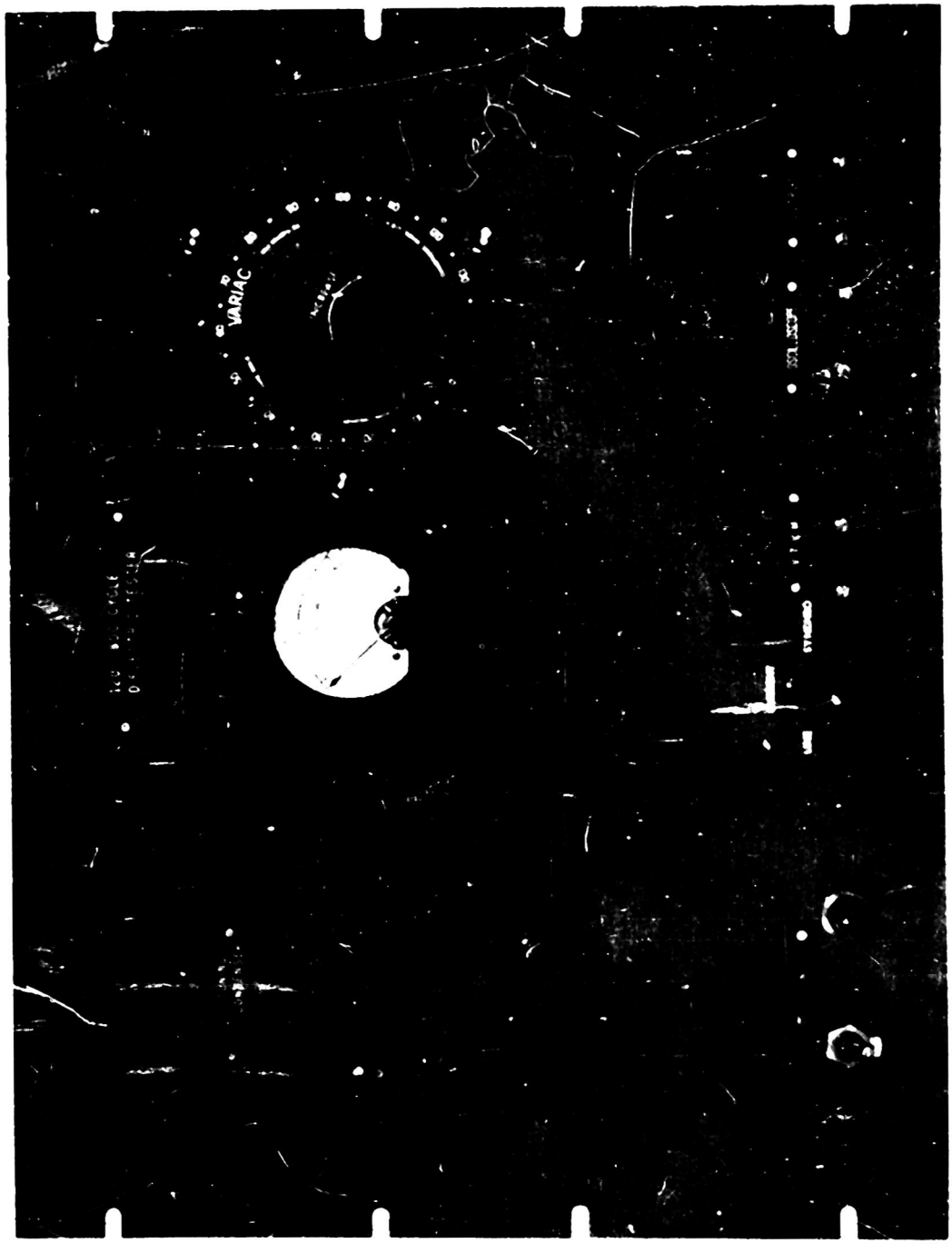

FIG. 1

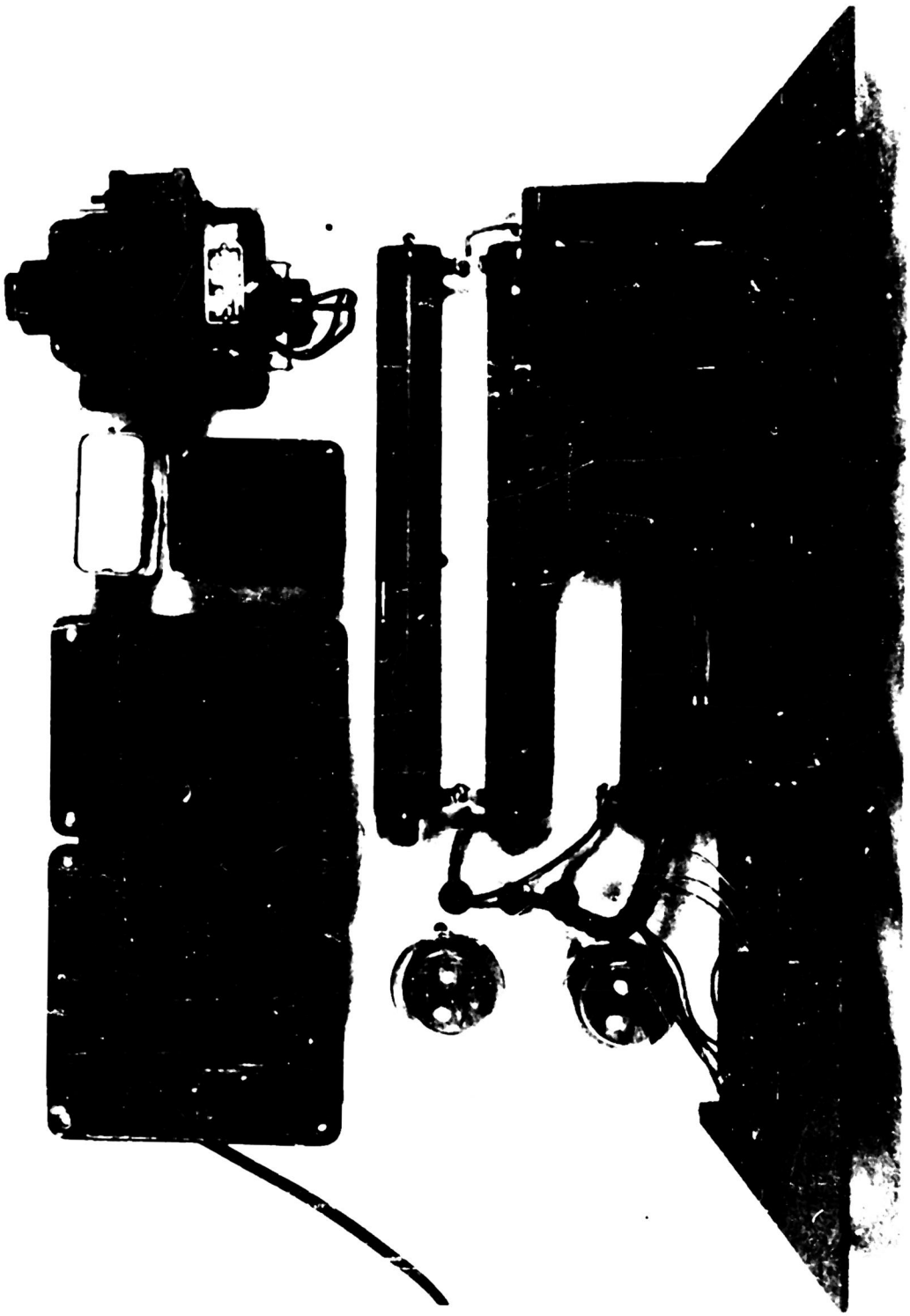

FIG. 2

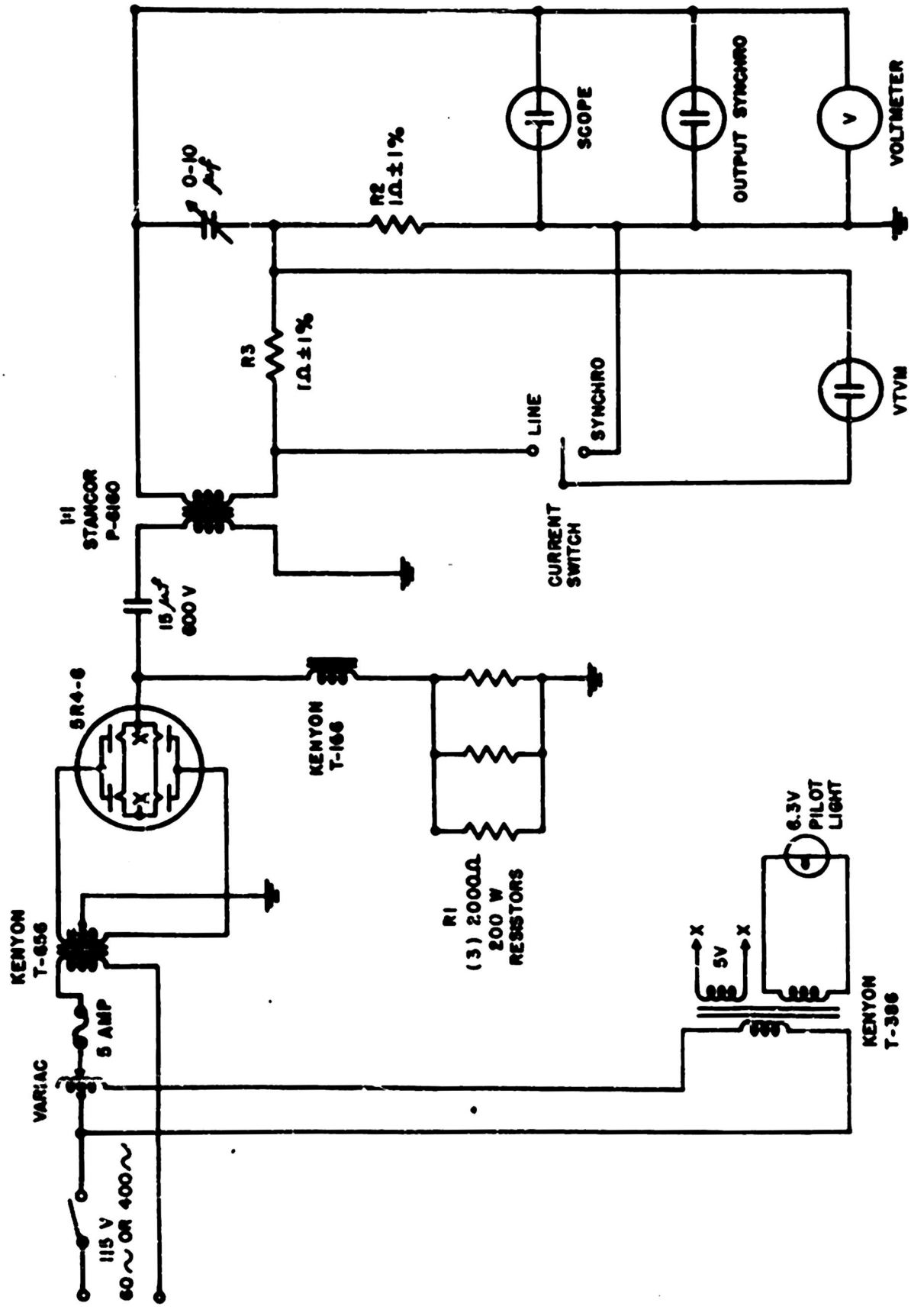
115 V
60~ OR 400~
VARIAC
5 AMP
KENYON
T-656
5R4-G
1:1
STANCOR
P-6460
15 μf
600 V
KENYON
T-166
R1
(3) 2000Ω
200 W
RESISTORS
R3
1Ω ±1%
0-10
μf
R2
1Ω ±1%
LINE
SYNCHRO
CURRENT
SWITCH
SCOPE
OUTPUT SYNCHRO
VOLTMETER
VTVM
X
5V
X
6.3V
PILOT
LIGHT
KENYON
T-386

FIG. 3

DISTRIBUTION

BuOrd, (Reha), Attn: N. B. Berman . . . . . 5 copies
BuAer, Attn: Gordon Clark . . . . . 1 copy
BuShips, Attn: J. T. Haropulos, Code 565B . . . . . 1 copy
C.O., Frankford Arsenal, Philadelphia, Pa., Fire Control
Laboratory, Attn: A. Bruno . . . . . 1 copy
Commander, Material Laboratory, New York Naval Shipyard,
Brooklyn, N. Y., Attn: L. Pellechia . . . . . 1 copy
Arma Corporation, 254 - 36th Street, Brooklyn, N. Y.,
Attn: J. Spector . . . . . 1 copy
Bendix Aviation Corporation, Eclipse-Pioneer Division
Attn: H. Rymars . . . . . 1 copy
Ketay Manufacturing Company, 555 Broadway, New York, N. Y.,
Attn: R. Rothschild . . . . . 1 copy
Ford Instrument Company, 31-10 Thomson Avenue, Long Island
City, N. Y., Attn: G. Schroeder . . . . . 1 copy
General Electric Company, Schenectady, N. Y.,
Attn: R. W. Votaw . . . . . 1 copy
Control Instrument Company, 67 - 35th Street, Brooklyn, N. Y.,
Attn: E. Lohse . . . . . 1 copy
C.O., Air Material Command, Wright Field, Dayton, Ohio
Attn: F. Banta, Code MCREXE4 . . . . . 1 copy
Doelcam Corporation, 56 Elmwood Street, Newton, Mass.,
Attn: George J. Schwartz . . . . . 1 copy
Schwien Engineering Company, 5736 W. Washington Blvd.,
Los Angeles 16, Calif., Attn: Don Rammage . . . . . 1 copy
Henschel Corporation, Amesbury, Mass., ... 1 copy
C.O., N.O.P., 21 Street & Arlington Avenue, Indianapolis
6, Ind., Attn: J. L. Montgomery . . . . . 3 copies
NRL, Attn: Bruce Stafford . . . . . 3 copies
Kearfott Company, Inc., 1150 McBride Avenue, Little Falls,
N. Y., Attn: J. A. Bronson. . . . . 1 copy
Electrolux Corporation, Forest Avenue, Old Greenwich,
Conn., Attn: A. E. Rudahl . . . . . 2 copies
Robertshaw-Fulton Controls Company, 2907 Clark Avenue,
St. Louis 3, Mo., Attn: J. Devine . . . . . 1 copy
Electric Auto-Lite Company, Engineering Department,
Champlin Street, Toledo, Ohio, Attn: Clyde M. Hayes . . . . 1 copy
Magnavox Company, Fort Wayne, Ind., Attn: A. E. Schmid . . . . . 1 copy
J. Dimond . . . . . 1 copy
Lou-Bar, 938 Pico Blvd., Santa Monica Calif.,
Attn: Joseph T. Webber . . . . . 1 copy
Rife & Rainss, Inc., 12 South 12th Street, Philadelphia, Pa.,
Attn: Herbert Galman . . . . . 1 copy
Hdqs., Wright Air Development Center, Wright-Patterson Air
Force Base, Dayton, Ohio, Attn: WCEFD - Hector Silvestre . 1 copy

DISTRIBUTION (continued)

Ahrendt Instrument Company, College Park, Md., Attn: William Ahrendt	1 copy
Rome Air Development Center, RCRTG2A (Griffiss AFB), Rome, N. Y., Attn: Haywood E. Webb	1 copy
Martin-Parry Corporation, Toledo, Ohio, Attn: M. E. Smith	1 copy
Beckman Instruments, Inc., 820 Mission Street, South Pasadena, Calif., Attn: P. B. Del Valle	1 copy
General Industries Company, Elyria, Ohio, Attn: Jack Lord	1 copy
QE Laboratory, U. S. NAD, Crane, Indiana, Attn: W. M. Kolb	1 copy